KENWOOD

AM-FM STEREO RECEIVER

(KR-6060) KR-6600

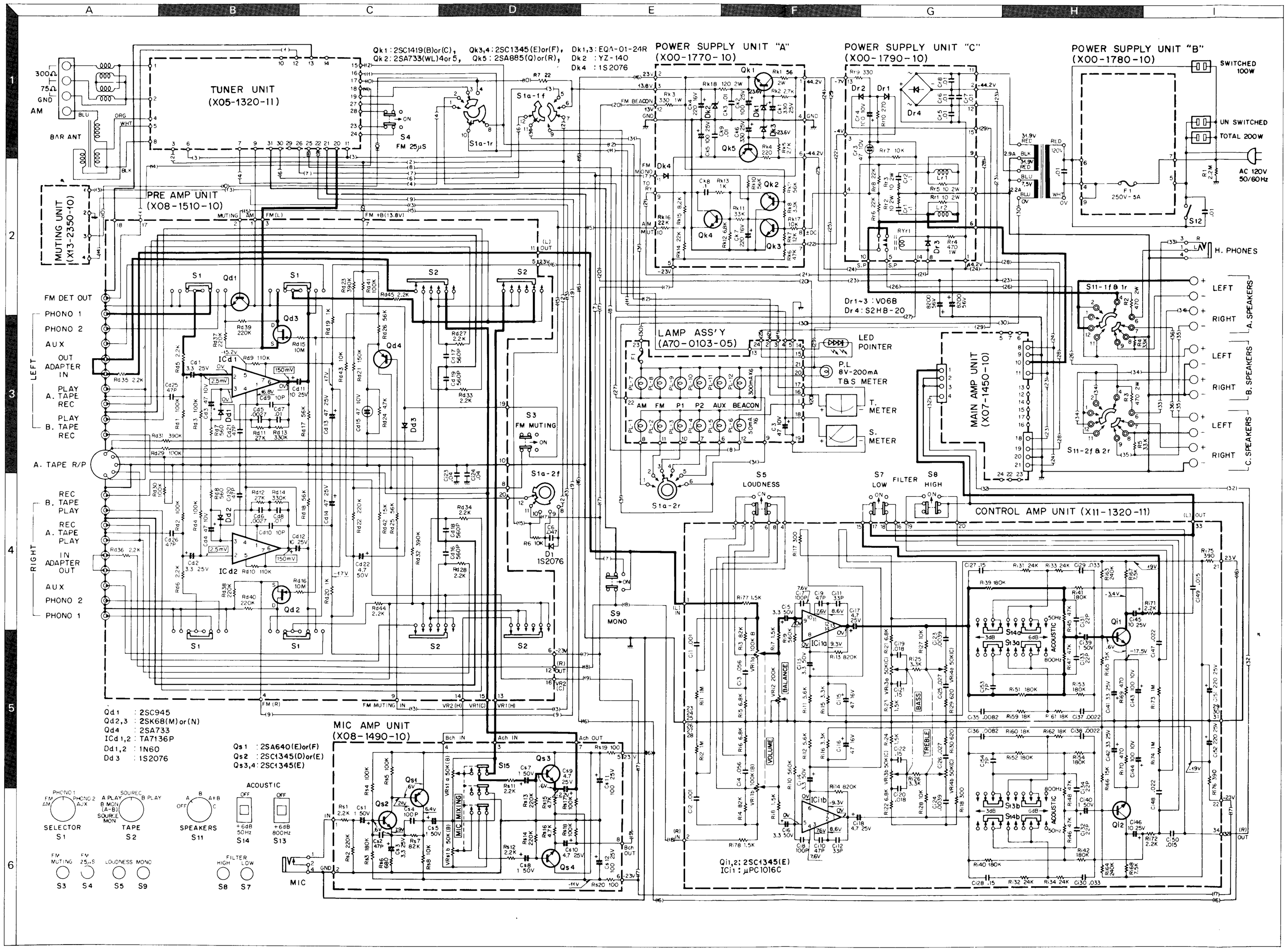

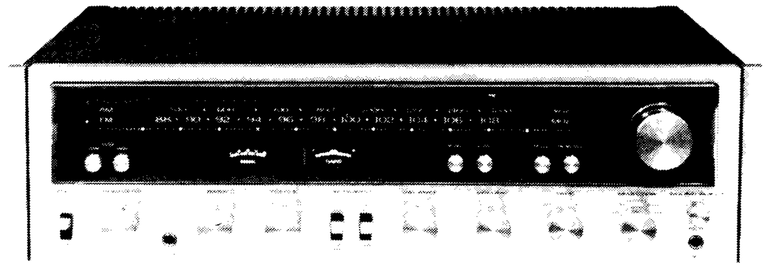

SPECIFICATIONS

FM TUNER SECTION (IHF)

Usable Sensitivity	1.7 μV
50 dB Quieting Sensitivity	3.0 (Mono)
	37 μV (Stereo)
Signal to Noise Ratio at 1 mV	75 dB (Mono)
	70 dB (Stereo)
T.H. Distortion at 1 mV	0.15% (Mono)
	0.25% (Stereo)
Frequency Response	20 Hz to 15,000 Hz +0.5 dB, −1.5 dB
Capture Ratio	1.5 dB
Alternate Channel Selectivity	80 dB
Spurious Response Ratio	85 dB
Image Response Ratio	85 dB
IF Response Ratio (Balanced)	100 dB
AM Suppression Ratio	65 dB
Stereo Separation	40 dB at 1,000 Hz, 35 dB from 50 Hz to 10,000 Hz
Subcarrier Product Ratio	65 dB
Antenna Impedance	300 ohms balanced and 75 ohms unbalanced
FM Frequency Range	88 MHz to 108 MHz
	88.5 MHz to 108 MHz (FTZ approved)

AM TUNER SECTION

Usable Sensitivity (IHF)	20 μV
Signal to Noise Ratio	50 dB
Image Rejection	45 dB
Selectivity (IHF)	35 dB
IF Rejection	35 dB

POWER AMPLIFIER SECTION

56 watts per channel minimum, RMS at 8 ohms from 20 Hz to 20,000 Hz with no more than 0.3% total harmonic distortion.

Both Channel Driven	60+60 watts 8 ohms at 1,000 Hz
	75+75 watts 4 ohms at 1,000 Hz
Dynamic Power Output	280 watts (4 ohms)
Total Harmonic Distortion	0.3% at rated power into 8 ohms
	0.05% at 1/2 rated power into 8 ohms at 1,000 Hz
Intermodulation Distortion	0.3% at rated power into 8 ohms
(60 Hz : 7 kHz 4 : 1)	0.1% at 1/2 rated power into 8 ohms
Power Bandwidth	7 Hz to 55,000 Hz
Damping Factor	45 at 8 ohms
Speaker Impedance	Accept 4 ohms to 16 ohms

PRE-AMPLIFIER SECTION

Input Sensitivity/Impedance/Signal to Noise Ratio (IHF A CURVE)	
Phono 1, 2	2.5 mV/50k ohms/70 dB
Aux	150 mV/45k ohms/90 dB
Tape	150 mV/45k ohms/90 dB
Mic	1.5 mV/50k ohm/65 dB
Maximum Input Level	
Phono	180 mV (rms) T.H.D. 0.1% at 1,000 Hz
Output Level/Impedance	
Tape REC (Pin)	150 mV/100 ohms
(Din)	30 mV/80k ohms
Frequency Response	
Phono	RIAA standard curve ±0.5 dB
Aux and Tape	20 Hz to 50,000 Hz, +0.5 dB, −1.0 dB
Mic	70 Hz to 20,000 Hz, +0 dB, −3.0 dB
Tape Control	
Base	±8 dB at 100 Hz
Treble	±8 dB at 10,000 Hz
Loudness Control (−30 dB)	+8 dB at 100 Hz, +5 dB at 10,000 Hz
Low Filter	−10 dB at 100 Hz
High Filter	−10 dB at 10 kHz
Acoustic 800 Hz	+6 dB
500 Hz	+6 dB

GENERAL

Power Requirement	AC 50/60 Hz 110~120V, 220~240V
Power Consumption	480 watts at full power
AC Outlet	Switched 1, Unswitched 2
Dimensions	W 20-13/32" (518mm)
	H 5-11/16" (151mm)
	D 14-3/8" (365mm)
	(Knob +26mm)
Weight	35.9 lbs. (16.3 kg)

KR-6600 (KR-6060)

TUNER UNIT (X05-1320-11)

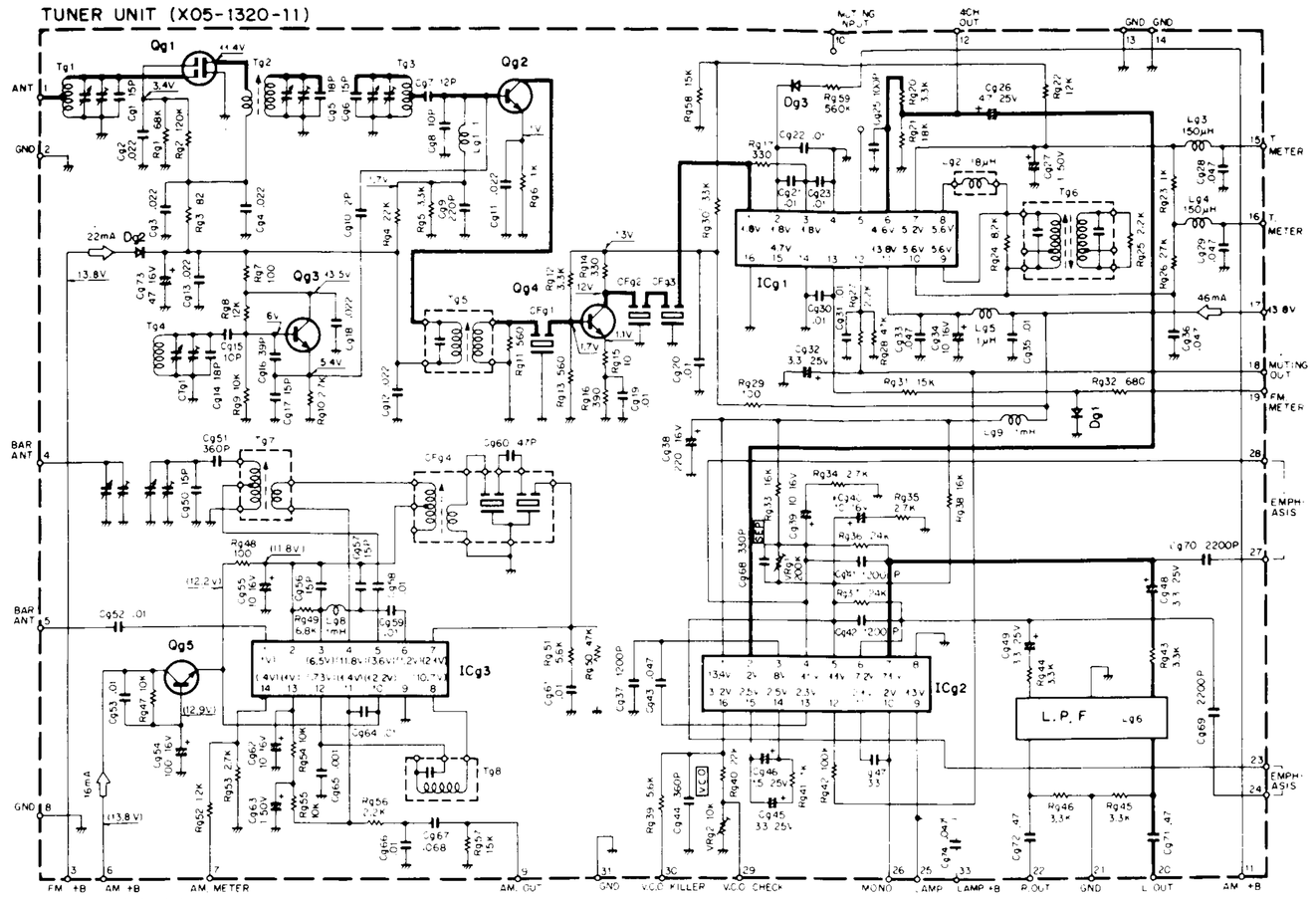

Qg1 : 3SK45(B) or (C), Qg2,4 : 2SC381(O) or 2SC1674(L) or (K), Qg3 : 2SC1342(A) or (B), Qg5 : 2SC945(Q), ICg1 : HA1137W, ICg2 : HA1196, ICg3 : HA1151
Dg1~3 : 1S2076 or 1S1555

POWER AMP UNIT (X07-1450-10)

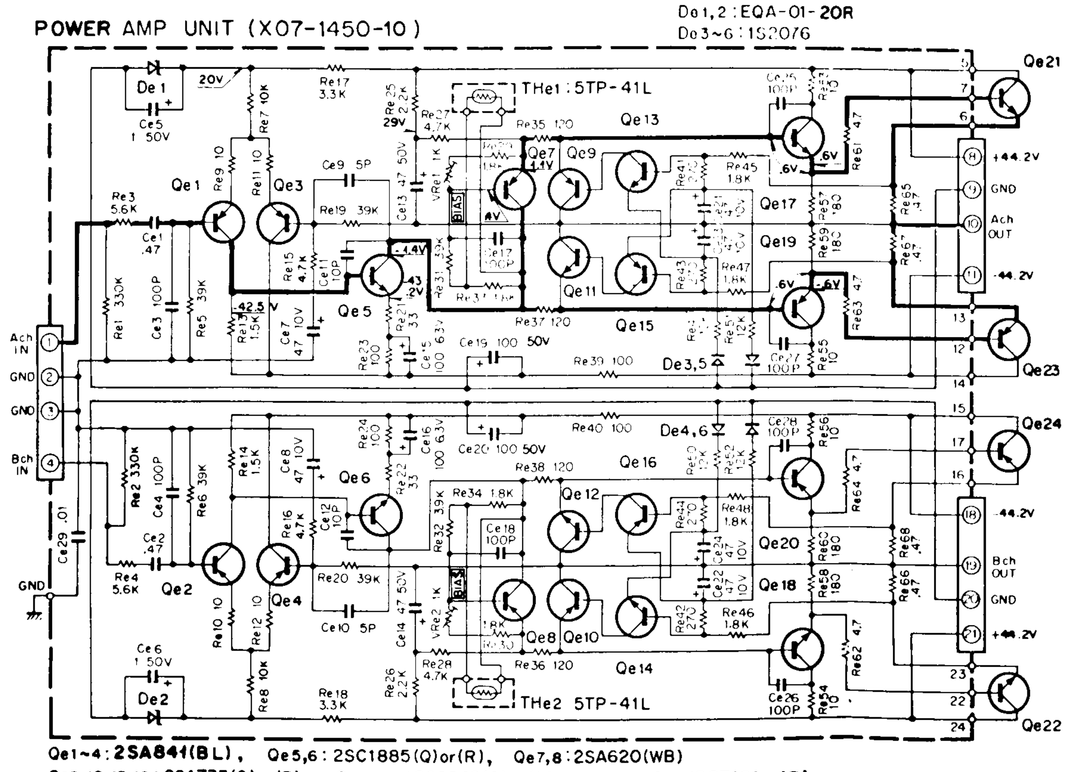

De1,2 : EQA-01-20R
De3~6 : 1S2076

Qe1~4 : 2SA841(BL), Qe5,6 : 2SC1885(Q) or (R), Qe7,8 : 2SA620(WB)
Qe9,10,15,16 : 2SA733(Q) or (R), Qe11~14 : 2SC945(Q) or (R), Qe17,18 : 2SC1567(Q) or (R)
Qe19,20 : 2SA794(Q) or (R), Qe21,22 : 2SC1403(R~Y), Qe23,24 : 2SA745(R~Y)

SUB-MUTING UNIT (X13-2350-10)

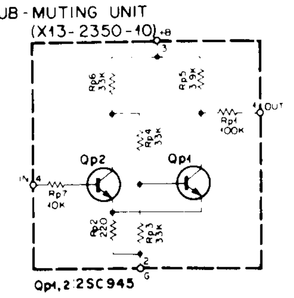

Qp1,2 : 2SC945

NOTE: There are 6 kinds of tuner units employed in KR-6600 and -7600 as the right table.

On X05-1320-11 and -12, 30 and 31 terminals are reversed connection for each other as compared with old one.

Model	Destination (Type)	Unit
KR-6600	K.P.U.M.M.	X05-1320-11 X05-1430-11 X05-1440-12
KR-7600	T.W.X.L	X05-1320-12 X05-1430-12 X05-1440-63

TUNER (X05-1430-11)

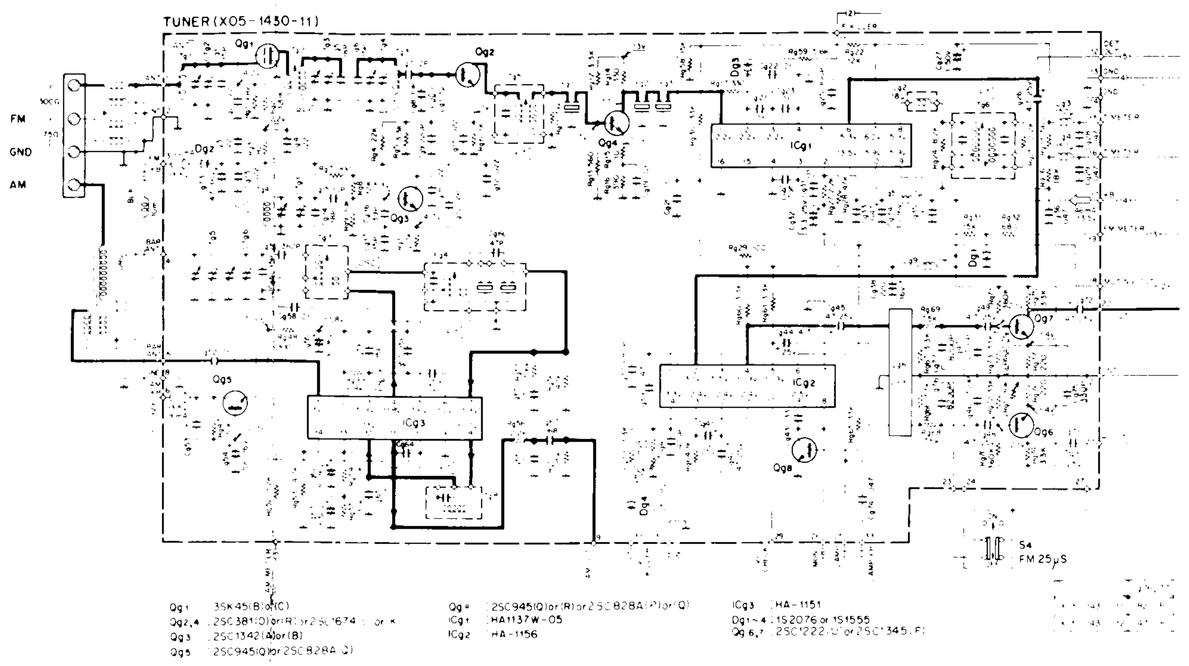

Qg1 : 3SK45(B) or (C)
Qg2,4 : 2SC381(O) or (R) or 2SC1674(L) or (K)
Qg3 : 2SC1342(A) or (B)
Qg5 : 2SC945(Q) or 2SC828A(Q)
Qg6 : 2SC945(Q) or (R) or 2SC828A(P) or (Q)
ICg1 : HA1137W-05
ICg2 : HA-1156
ICg3 : HA-1151
Dg1~4 : 1S2076 or 1S1555
Dg5,6 : 2SC222-U or 2SC1345-F

TUNER (X05-1440-12)

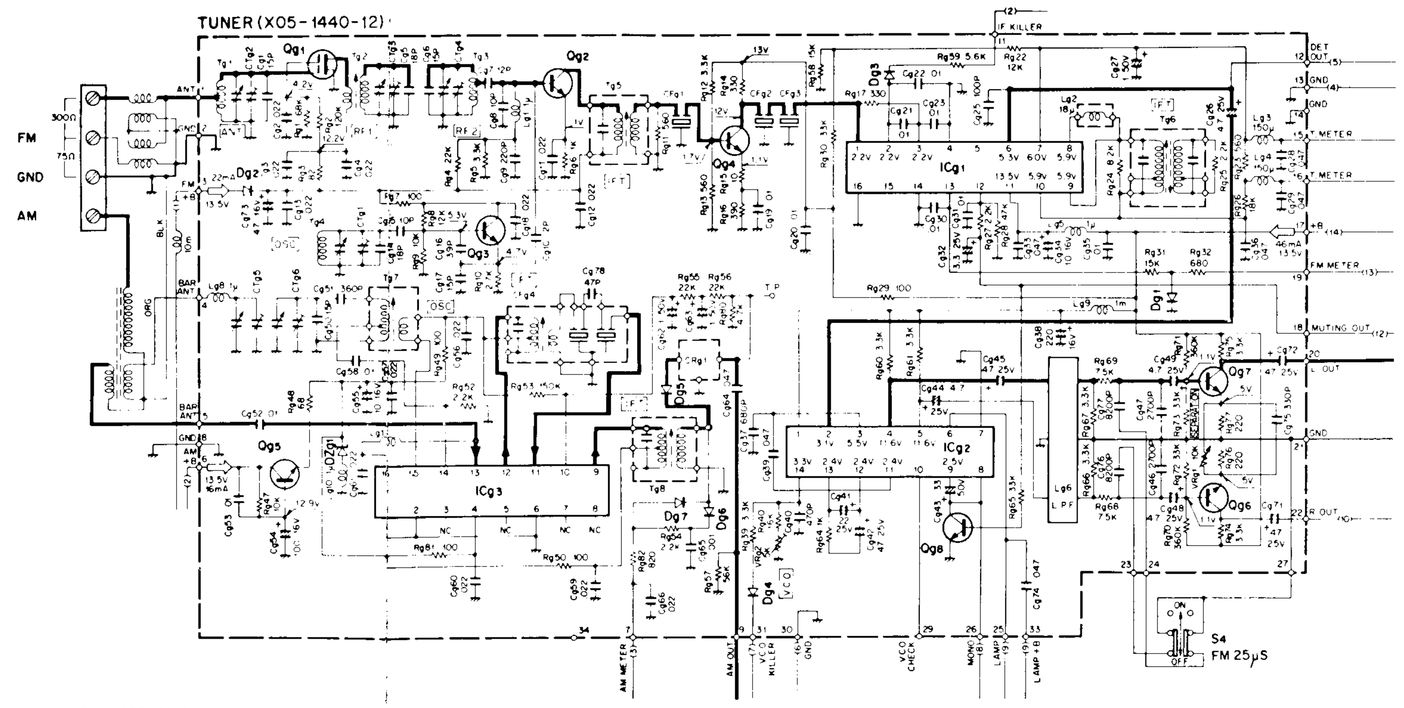

Qg1 : 3SK45(B) or (C)
Qg2,4 : 2SC381(O) or (R) or 2SC1674(L) or (K)
Qg3 : 2SC1342(A) or (B)
Qg5 : 2SC945(Q) or 2SC828A(Q)
Qg6,7 : 2SC1222(U)
Qg8 : 2SC945(Q) or (R) or 2SC828A(P) or (Q)
ICg1 : HA1137W-05
ICg2 : HA-1156
ICg3 : AN-217(BB) or (AB) or (CB)
Dg1~4,7 : 1S2076 or 1S1555
Dg5,6 : 1N60
DZg1 : BZ090

(K), (P) Type

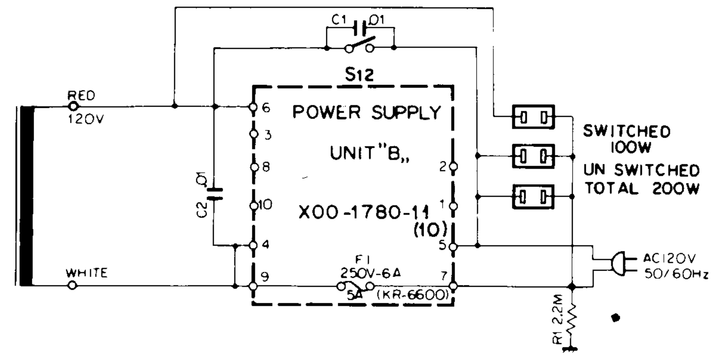

(E) Type For Europe

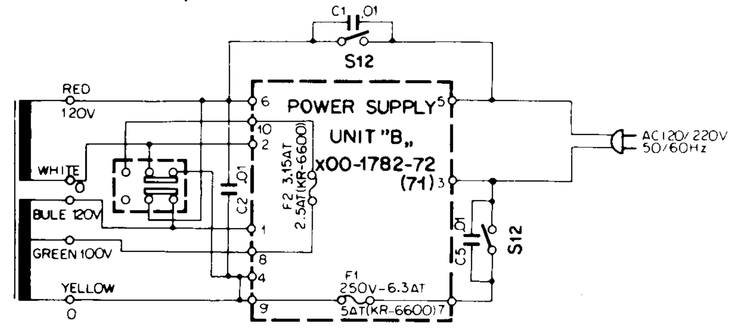

(U), (M1), (X), (M2) Type

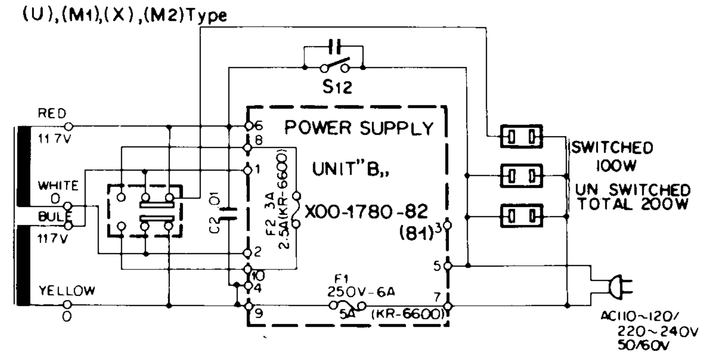

(T) Type For England

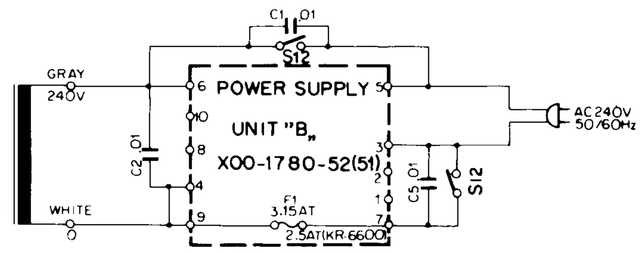

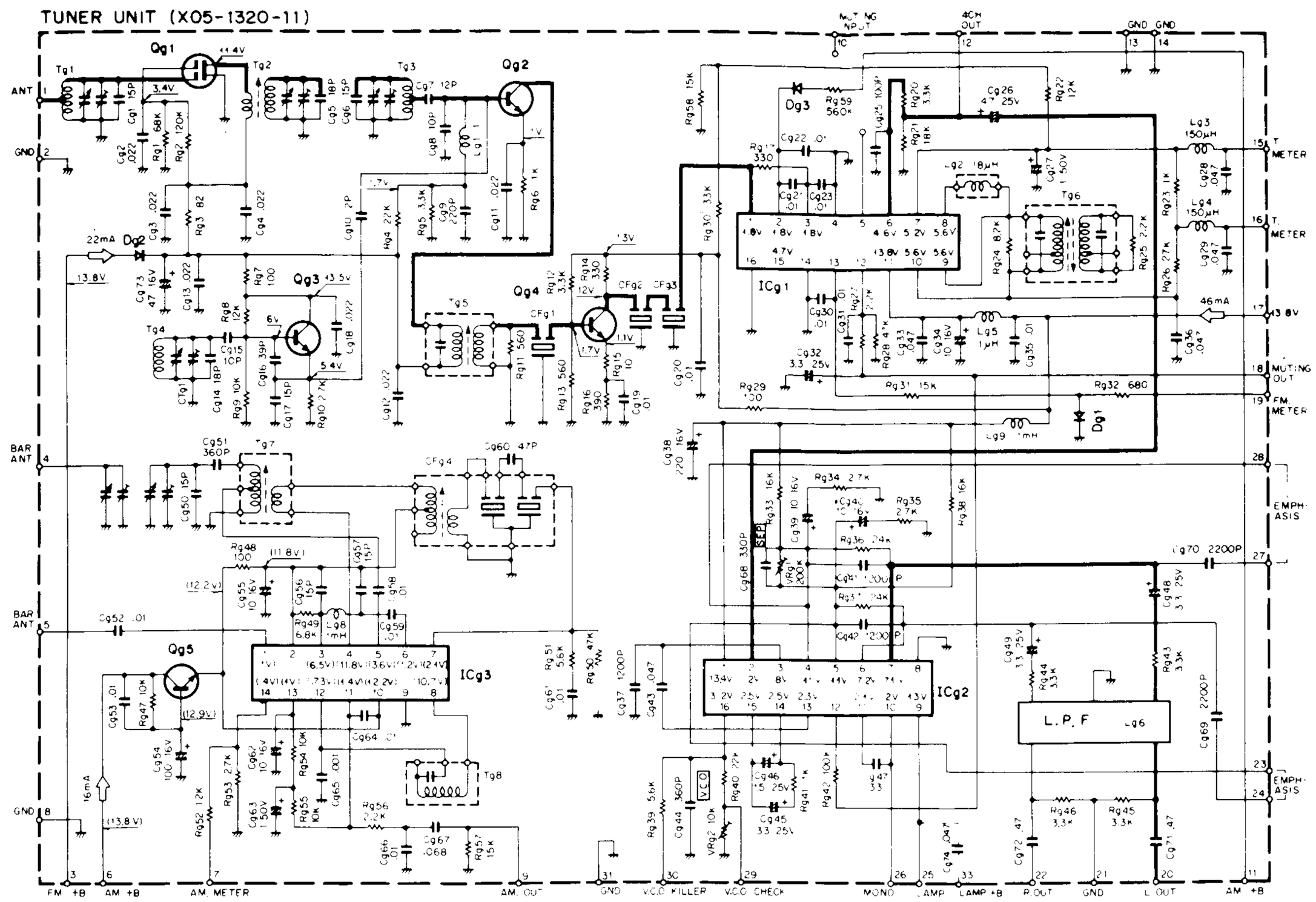
TUNER UNIT (X05-1320-11)
ICg1
ICg2
ICg3
L.P.F
Qg1 : 3SK45(B) or (C), Qg2,4 : 2SC381(O) or 2SC1674(L) or (K), Qg3 : 2SC1342(A) or (B), Qg5 : 2SC945(Q), ICg1 : HA1137W, ICg2 : HA1196, ICg3 : HA1151
Dg1~3 : 1S2076 or 1S1555

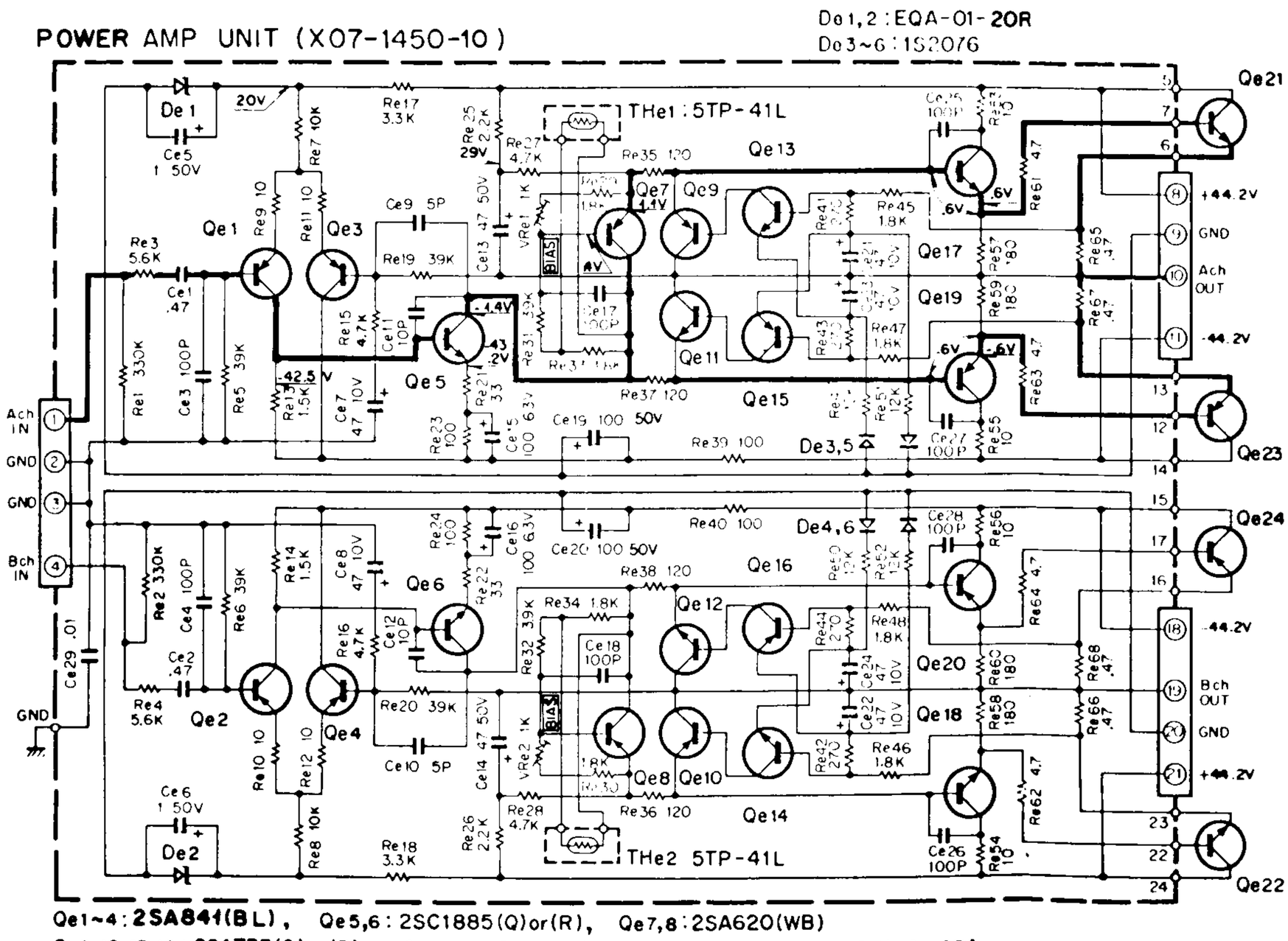
POWER AMP UNIT (X07-1450-10)
De1,2 : EQA-01-20R
De3~6 : 1S2076
THe1 : 5TP-41L
THe2 5TP-41L
Qe1~4 : 2SA841(BL), Qe5,6 : 2SC1885(Q) or (R), Qe7,8 : 2SA620(WB)
Qe9,10,15,16 : 2SA733(Q) or (R), Qe11~14 : 2SC945(Q) or (R), Qe17,18 : 2SC1567(Q) or (R)
Qe19,20 : 2SA794(Q) or (R), Qe21,22 : 2SC1403(R~Y), Qe23,24 : 2SA745(R~Y)

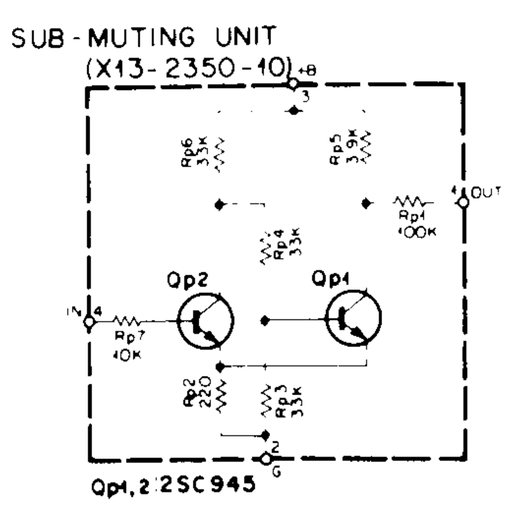
SUB-MUTING UNIT
(X13-2350-10)
Qp1,2 : 2SC945

NOTE: There are 6 kinds of tuner units employed in KR-6600 and -7600 as the right table.

On X05-1320-11 and -12, 30 and 31 terminals are reversed connection for each other as compared with old one.

Model	Destination (Type)	Unit
KR-6600	K,P,U,M,M.	X05-1320-11, X05-1430-11, X05-1440-12
KR-7600	T,W,X,L	X05-1320-12, X05-1430-12 X05-1440-63

TUNER (X05-1430-11)

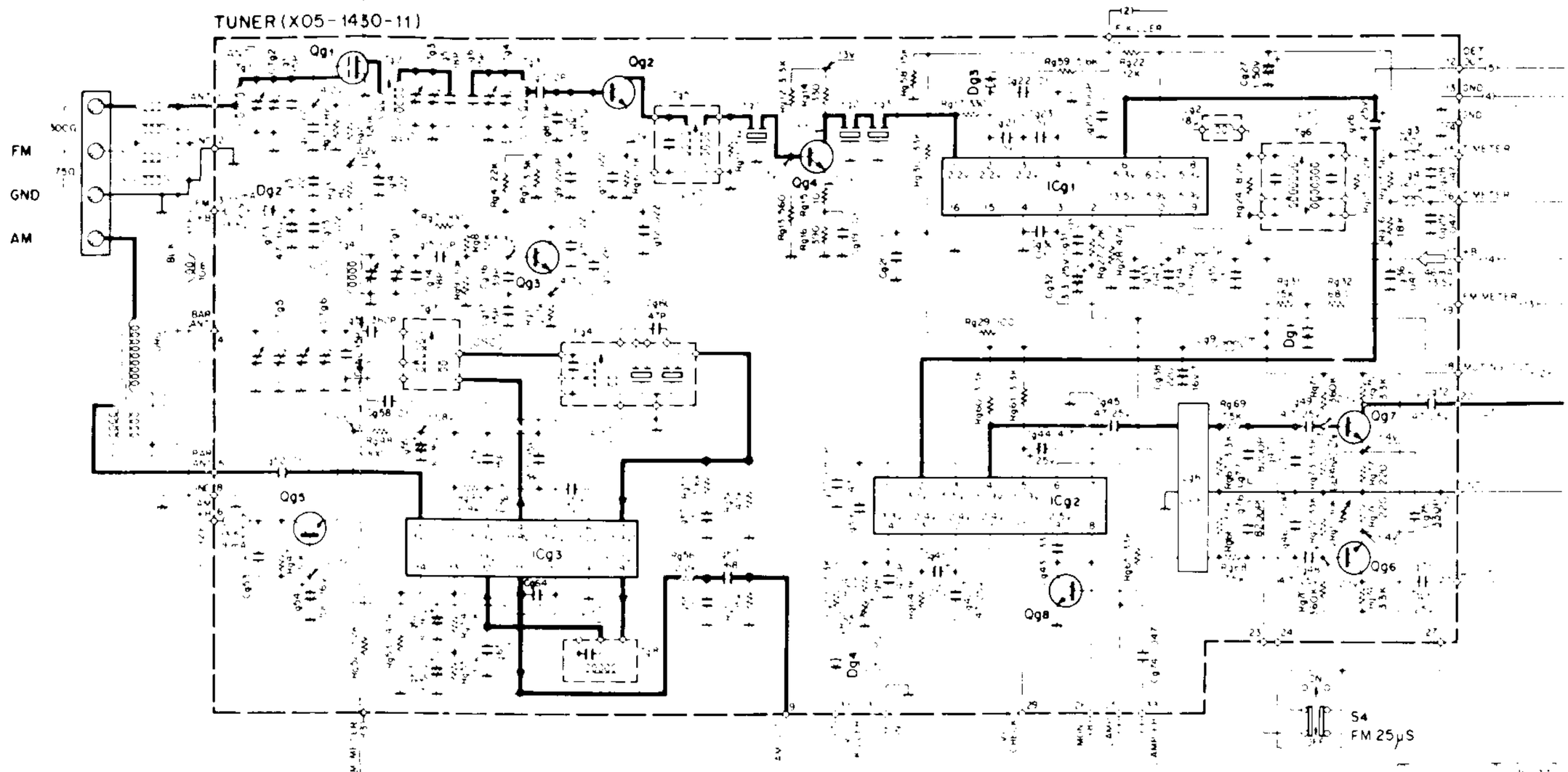

Qg1 : 3SK45(B) or (C)
Qg2,4 : 2SC381(O) or (R) or 2SC1674 (L) or (K)
Qg3 : 2SC1342 (A) or (B)
Qg5 : 2SC945(Q) or 2SC828A (Q)
Qg6 : 2SC945(Q) or (R) or 2SC828A (P) or (Q)
ICg1 : HA1137W-05
ICg2 : HA-1156
ICg3 : HA-1151
Dg1~4 : 1S2076 or 1S1555
Qg6,7 : 2SC1222 (U) or 2SC1345 (F)

TUNER (X05-1440-12)

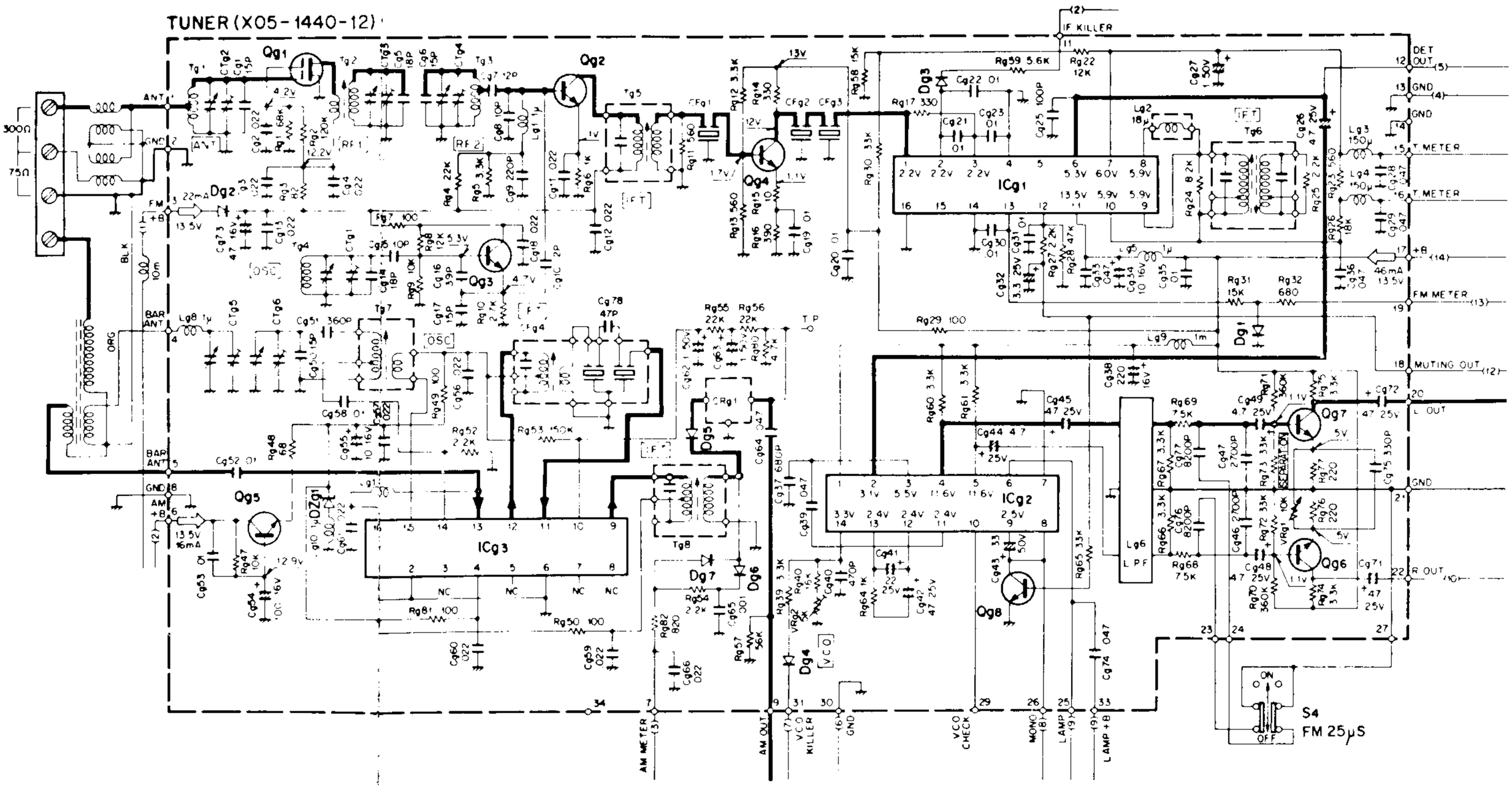

Qg1 : 3SK45(B) or (C)
Qg2,4 : 2SC381(O) or (R) or 2SC1674 (L) or (K)
Qg3 : 2SC1342 (A) or (B)
Qg5 : 2SC945 (Q) or 2SC828A (Q)
Qg6,7 : 2SC1222 (U)
Qg8 : 2SC945 (Q) or (R) or 2SC828A (P) or (Q)
ICg1 : HA1137W-05
ICg2 : HA-1156
ICg3 : AN-217 (BB) or (AB) or (CB)
Dg1~4,7 : 1S2076 or 1S1555
Dg5,6 : 1N60
DZg1 : BZ090