# KENWOOD

# AM-FM STEREO RECEIVER

# (KR-6060) KR-6600

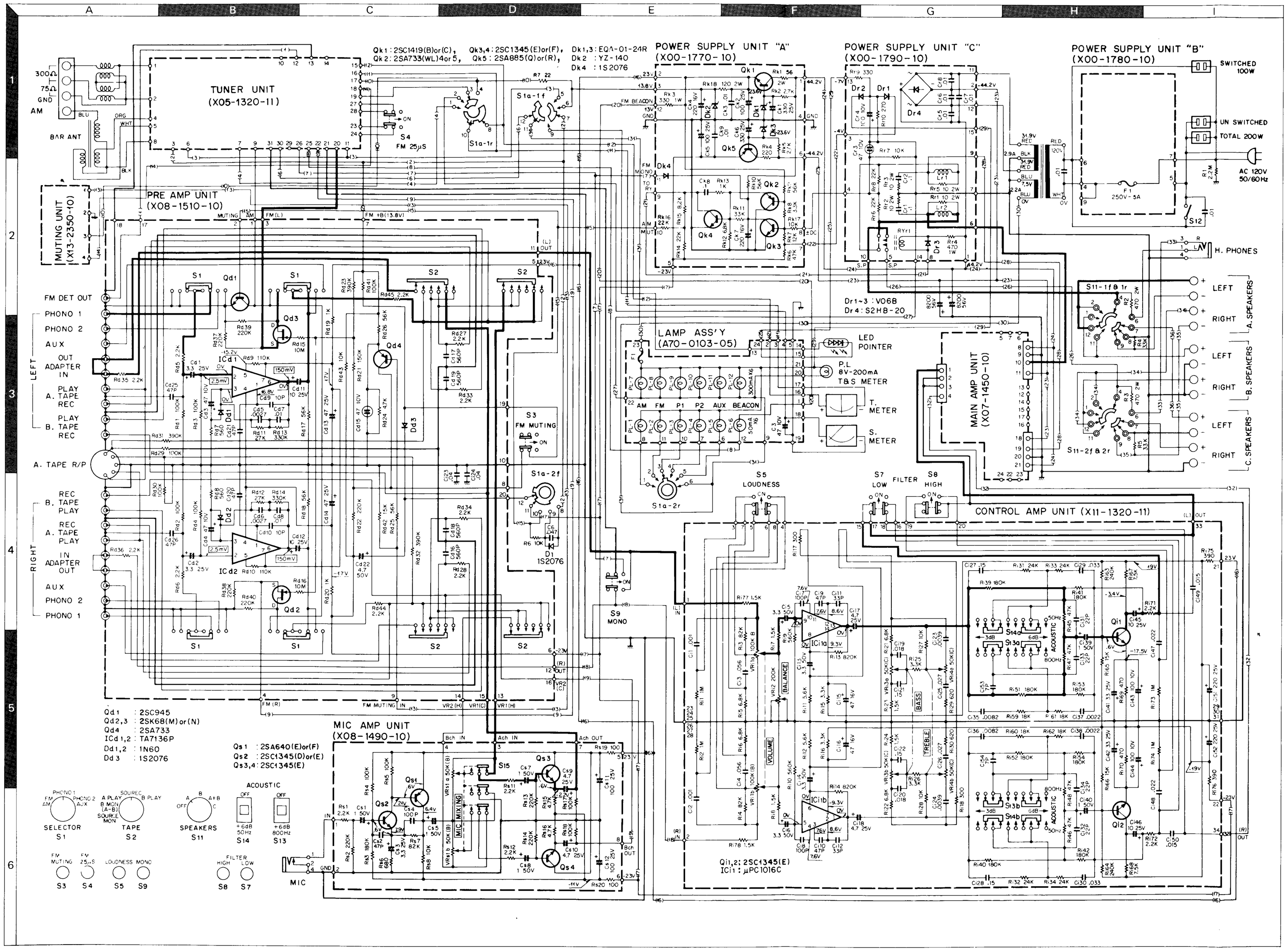


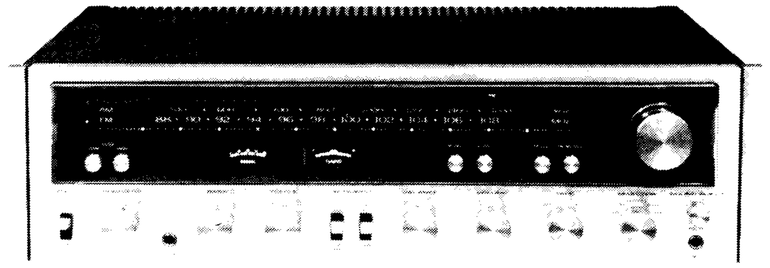

## SPECIFICATIONS

### FM TUNER SECTION (IHF)

| | |
|---|---|
| Usable Sensitivity | 1.7 μV |
| 50 dB Quieting Sensitivity | 3.0 (Mono) |
| | 37 μV (Stereo) |
| Signal to Noise Ratio at 1 mV | 75 dB (Mono) |
| | 70 dB (Stereo) |
| T.H. Distortion at 1 mV | 0.15% (Mono) |
| | 0.25% (Stereo) |
| Frequency Response | 20 Hz to 15,000 Hz +0.5 dB, −1.5 dB |
| Capture Ratio | 1.5 dB |
| Alternate Channel Selectivity | 80 dB |
| Spurious Response Ratio | 85 dB |
| Image Response Ratio | 85 dB |
| IF Response Ratio (Balanced) | 100 dB |
| AM Suppression Ratio | 65 dB |
| Stereo Separation | 40 dB at 1,000 Hz, 35 dB from 50 Hz to 10,000 Hz |
| Subcarrier Product Ratio | 65 dB |
| Antenna Impedance | 300 ohms balanced and 75 ohms unbalanced |
| FM Frequency Range | 88 MHz to 108 MHz |
| | 88.5 MHz to 108 MHz (FTZ approved) |

### AM TUNER SECTION

| | |
|---|---|
| Usable Sensitivity (IHF) | 20 μV |
| Signal to Noise Ratio | 50 dB |
| Image Rejection | 45 dB |
| Selectivity (IHF) | 35 dB |
| IF Rejection | 35 dB |

### POWER AMPLIFIER SECTION

56 watts per channel minimum, RMS at 8 ohms from 20 Hz to 20,000 Hz with no more than 0.3% total harmonic distortion.

| | |
|---|---|
| Both Channel Driven | 60+60 watts 8 ohms at 1,000 Hz |
| | 75+75 watts 4 ohms at 1,000 Hz |
| Dynamic Power Output | 280 watts (4 ohms) |
| Total Harmonic Distortion | 0.3% at rated power into 8 ohms |
| | 0.05% at 1/2 rated power into 8 ohms at 1,000 Hz |
| Intermodulation Distortion | 0.3% at rated power into 8 ohms |
| (60 Hz : 7 kHz 4 : 1) | 0.1% at 1/2 rated power into 8 ohms |
| Power Bandwidth | 7 Hz to 55,000 Hz |
| Damping Factor | 45 at 8 ohms |
| Speaker Impedance | Accept 4 ohms to 16 ohms |

### PRE-AMPLIFIER SECTION

| | |
|---|---|
| Input Sensitivity/Impedance/Signal to Noise Ratio (IHF A CURVE) | |
| Phono 1, 2 | 2.5 mV/50k ohms/70 dB |
| Aux | 150 mV/45k ohms/90 dB |
| Tape | 150 mV/45k ohms/90 dB |
| Mic | 1.5 mV/50k ohm/65 dB |
| Maximum Input Level | |
| Phono | 180 mV (rms) T.H.D. 0.1% at 1,000 Hz |
| Output Level/Impedance | |
| Tape REC (Pin) | 150 mV/100 ohms |
| (Din) | 30 mV/80k ohms |
| Frequency Response | |
| Phono | RIAA standard curve ±0.5 dB |
| Aux and Tape | 20 Hz to 50,000 Hz, +0.5 dB, −1.0 dB |
| Mic | 70 Hz to 20,000 Hz, +0 dB, −3.0 dB |
| Tape Control | |
| Base | ±8 dB at 100 Hz |
| Treble | ±8 dB at 10,000 Hz |
| Loudness Control (−30 dB) | +8 dB at 100 Hz, +5 dB at 10,000 Hz |
| Low Filter | −10 dB at 100 Hz |
| High Filter | −10 dB at 10 kHz |
| Acoustic 800 Hz | +6 dB |
| 500 Hz | +6 dB |

### GENERAL

| | |
|---|---|
| Power Requirement | AC 50/60 Hz 110~120V, 220~240V |
| Power Consumption | 480 watts at full power |
| AC Outlet | Switched 1, Unswitched 2 |
| Dimensions | W 20-13/32" (518mm) |
| | H 5-11/16" (151mm) |
| | D 14-3/8" (365mm) |
| | (Knob +26mm) |
| Weight | 35.9 lbs. (16.3 kg) |

KR-6600 (KR-6060)

TUNER UNIT (X05-1320-11)

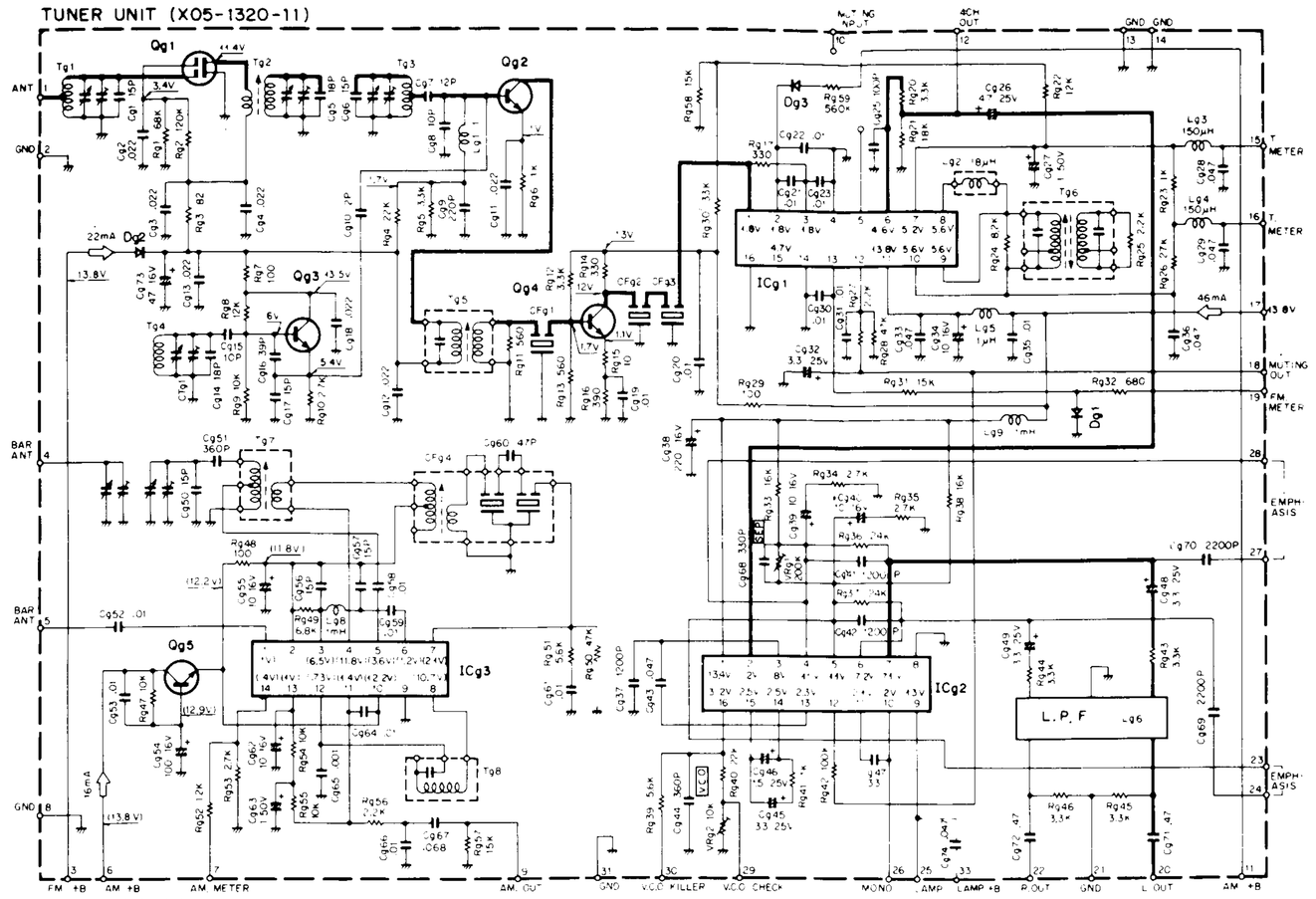

Qg1 : 3SK45(B) or (C), Qg2,4 : 2SC381(O) or 2SC1674(L) or (K), Qg3 : 2SC1342(A) or (B), Qg5 : 2SC945(Q), ICg1 : HA1137W, ICg2 : HA1196, ICg3 : HA1151
Dg1~3 : 1S2076 or 1S1555

POWER AMP UNIT (X07-1450-10)

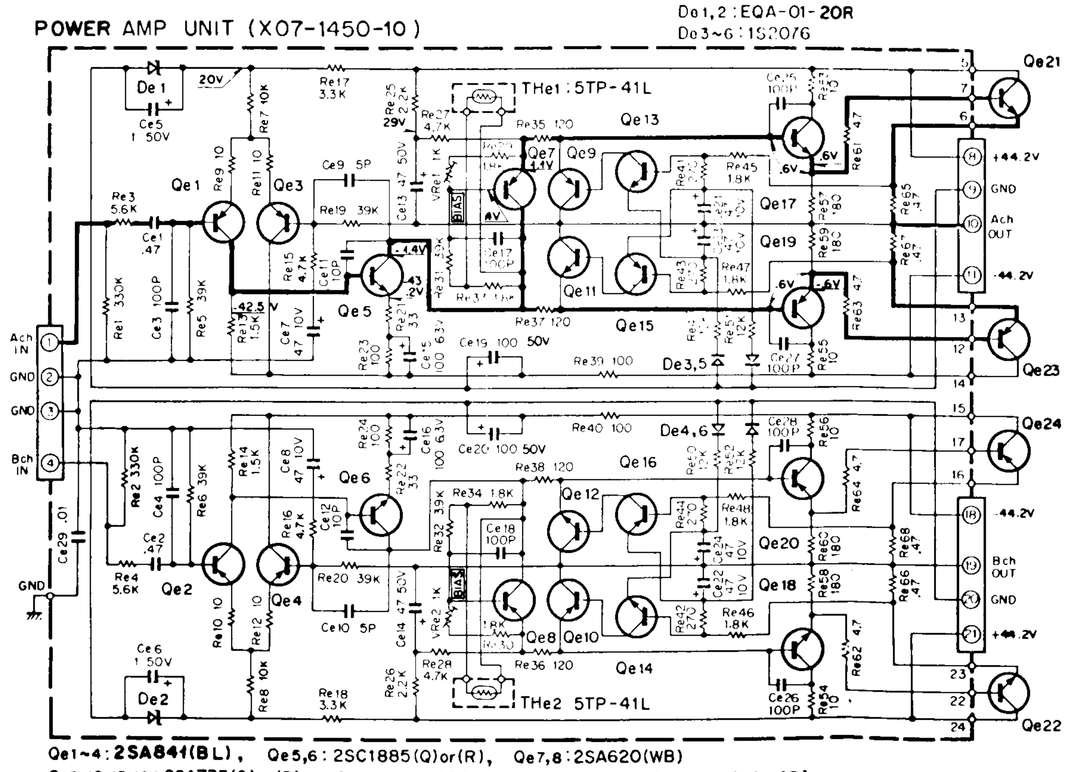

De1,2 : EQA-01-20R
De3~6 : 1S2076

Qe1~4 : 2SA841(BL), Qe5,6 : 2SC1885(Q) or (R), Qe7,8 : 2SA620(WB)
Qe9,10,15,16 : 2SA733(Q) or (R), Qe11~14 : 2SC945(Q) or (R), Qe17,18 : 2SC1567(Q) or (R)
Qe19,20 : 2SA794(Q) or (R), Qe21,22 : 2SC1403(R~Y), Qe23,24 : 2SA745(R~Y)

SUB-MUTING UNIT (X13-2350-10)

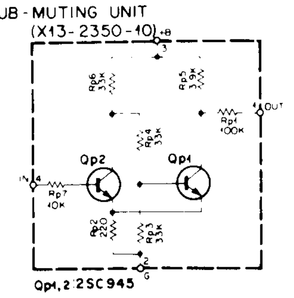

Qp1,2 : 2SC945

NOTE: There are 6 kinds of tuner units employed in KR-6600 and -7600 as the right table.

On X05-1320-11 and -12, 30 and 31 terminals are reversed connection for each other as compared with old one.

| Model | Destination (Type) | Unit |
|---|---|---|
| KR-6600 | K.P.U.M.M. | X05-1320-11<br>X05-1430-11<br>X05-1440-12 |
| KR-7600 | T.W.X.L | X05-1320-12<br>X05-1430-12<br>X05-1440-63 |

TUNER (X05-1430-11)

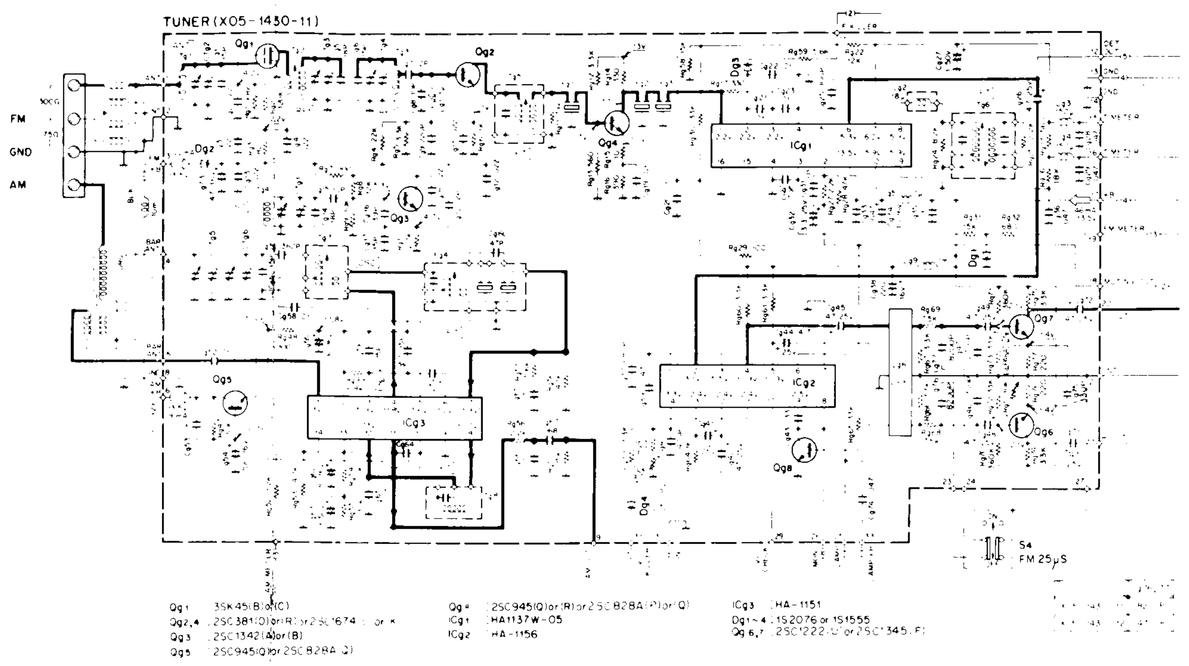

Qg1 : 3SK45(B) or (C)
Qg2,4 : 2SC381(O) or (R) or 2SC1674(L) or (K)
Qg3 : 2SC1342(A) or (B)
Qg5 : 2SC945(Q) or 2SC828A(Q)
Qg6 : 2SC945(Q) or (R) or 2SC828A(P) or (Q)
ICg1 : HA1137W-05
ICg2 : HA-1156
ICg3 : HA-1151
Dg1~4 : 1S2076 or 1S1555
Dg5,6 : 2SC222-U or 2SC1345-F

TUNER (X05-1440-12)

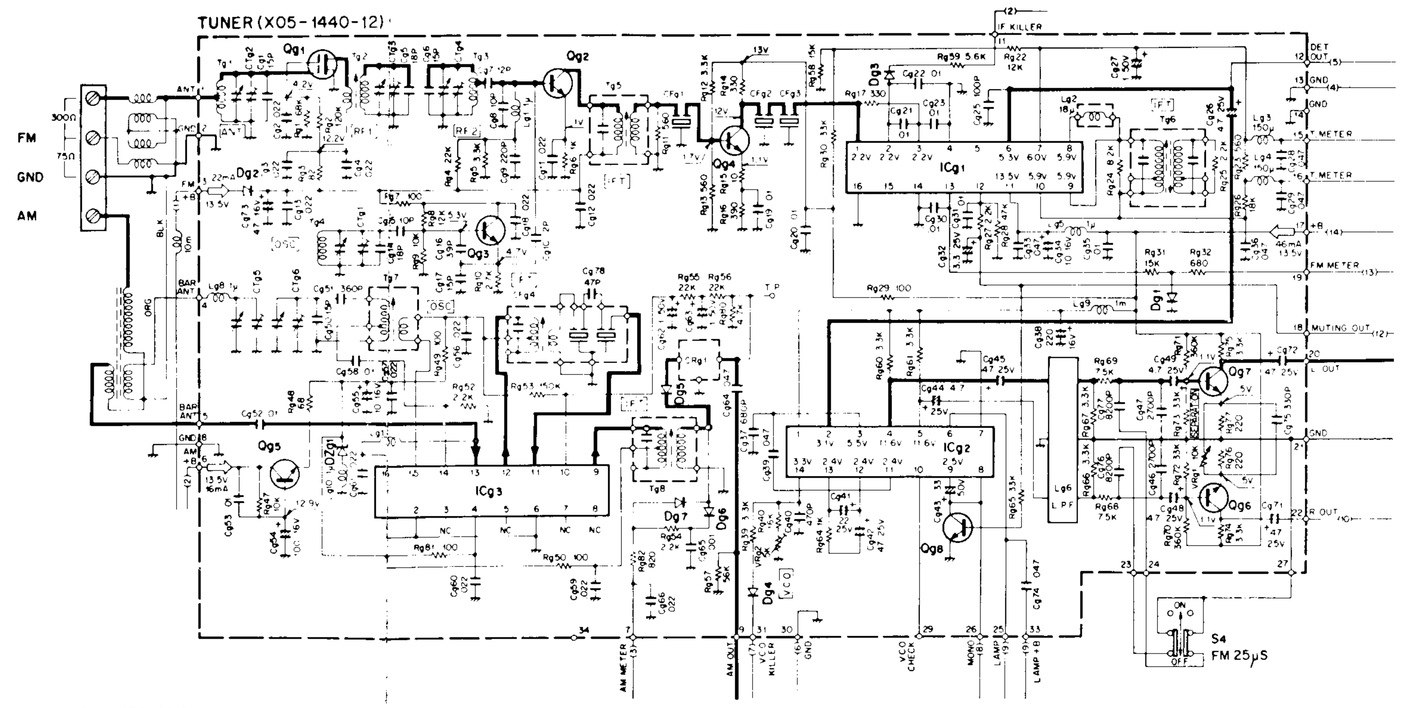

Qg1 : 3SK45(B) or (C)
Qg2,4 : 2SC381(O) or (R) or 2SC1674(L) or (K)
Qg3 : 2SC1342(A) or (B)
Qg5 : 2SC945(Q) or 2SC828A(Q)
Qg6,7 : 2SC1222(U)
Qg8 : 2SC945(Q) or (R) or 2SC828A(P) or (Q)
ICg1 : HA1137W-05
ICg2 : HA-1156
ICg3 : AN-217(BB) or (AB) or (CB)
Dg1~4,7 : 1S2076 or 1S1555
Dg5,6 : 1N60
DZg1 : BZ090

(K), (P) Type

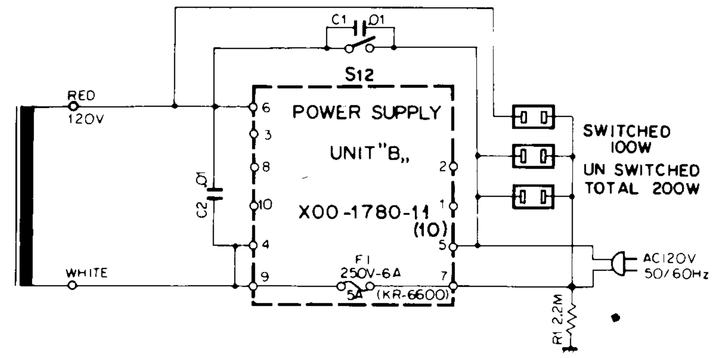


(E) Type For Europe

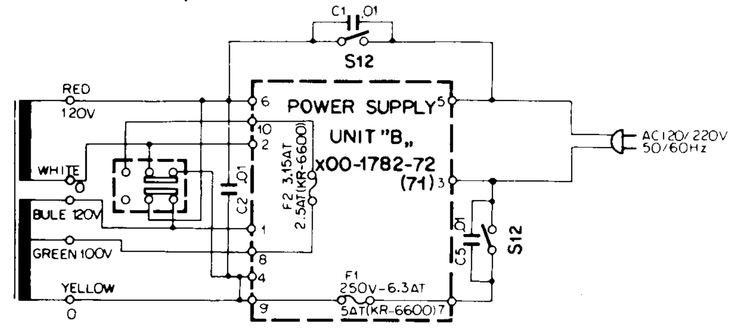


(U), (M1), (X), (M2) Type

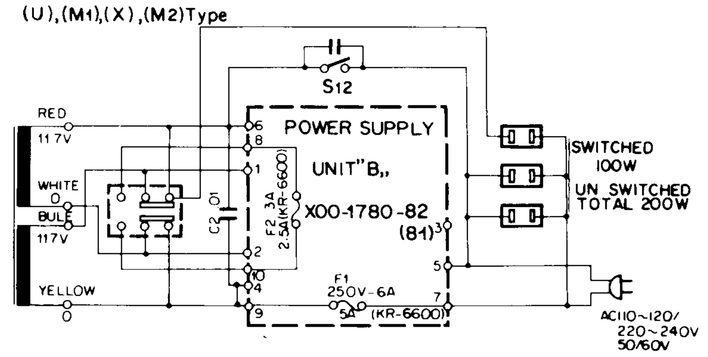


(T) Type For England

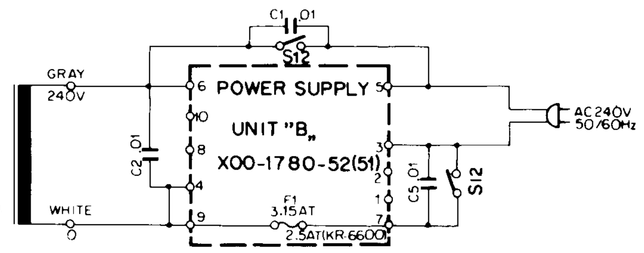

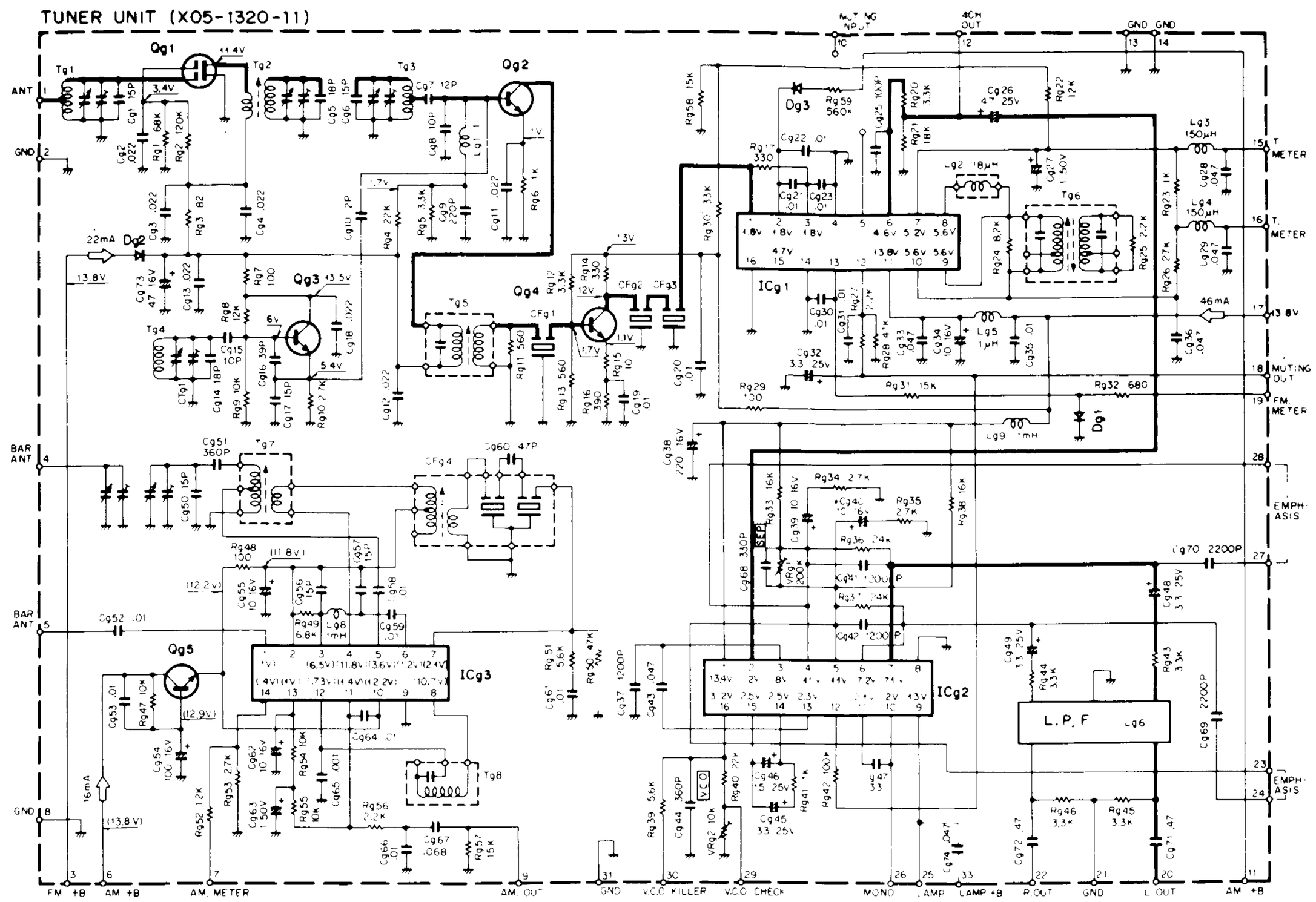
TUNER UNIT (X05-1320-11)
ICg1
ICg2
ICg3
L.P.F
Qg1 : 3SK45(B) or (C), Qg2,4 : 2SC381(O) or 2SC1674(L) or (K), Qg3 : 2SC1342(A) or (B), Qg5 : 2SC945(Q), ICg1 : HA1137W, ICg2 : HA1196, ICg3 : HA1151
Dg1~3 : 1S2076 or 1S1555

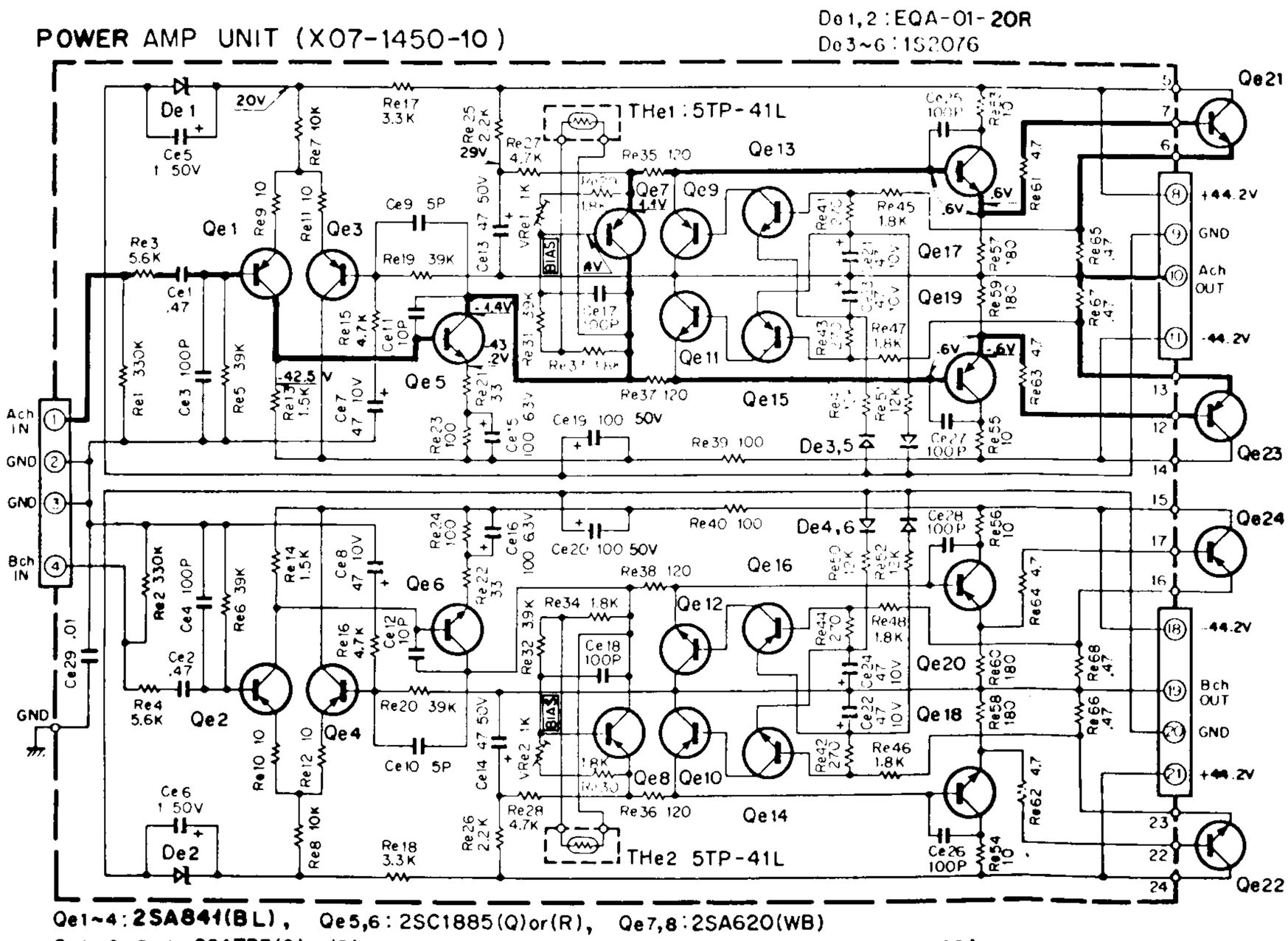
POWER AMP UNIT (X07-1450-10)
De1,2 : EQA-01-20R
De3~6 : 1S2076
THe1 : 5TP-41L
THe2 5TP-41L
Qe1~4 : 2SA841(BL), Qe5,6 : 2SC1885(Q) or (R), Qe7,8 : 2SA620(WB)
Qe9,10,15,16 : 2SA733(Q) or (R), Qe11~14 : 2SC945(Q) or (R), Qe17,18 : 2SC1567(Q) or (R)
Qe19,20 : 2SA794(Q) or (R), Qe21,22 : 2SC1403(R~Y), Qe23,24 : 2SA745(R~Y)

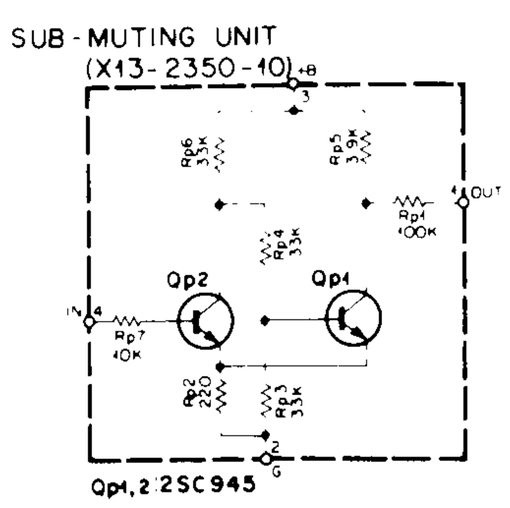
SUB-MUTING UNIT
(X13-2350-10)
Qp1,2 : 2SC945

**NOTE:** There are 6 kinds of tuner units employed in KR-6600 and -7600 as the right table.

On X05-1320-11 and -12, 30 and 31 terminals are reversed connection for each other as compared with old one.

| Model | Destination (Type) | Unit |
|---|---|---|
| KR-6600 | K,P,U,M,M. | X05-1320-11, X05-1430-11, X05-1440-12 |
| KR-7600 | T,W,X,L | X05-1320-12, X05-1430-12 X05-1440-63 |

TUNER (X05-1430-11)

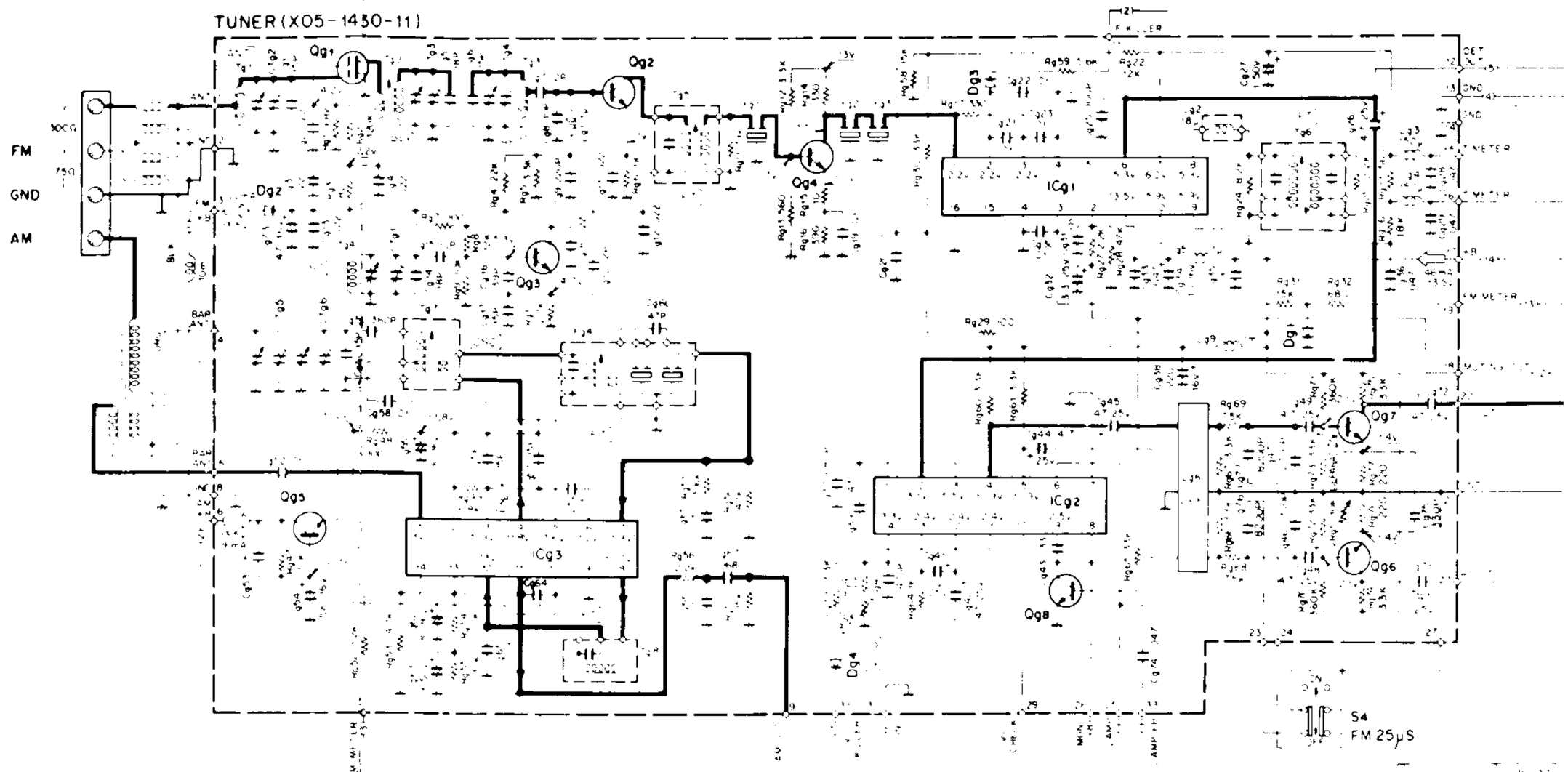


Qg1 : 3SK45(B) or (C)
Qg2,4 : 2SC381(O) or (R) or 2SC1674 (L) or (K)
Qg3 : 2SC1342 (A) or (B)
Qg5 : 2SC945(Q) or 2SC828A (Q)
Qg6 : 2SC945(Q) or (R) or 2SC828A (P) or (Q)
ICg1 : HA1137W-05
ICg2 : HA-1156
ICg3 : HA-1151
Dg1~4 : 1S2076 or 1S1555
Qg6,7 : 2SC1222 (U) or 2SC1345 (F)

TUNER (X05-1440-12)

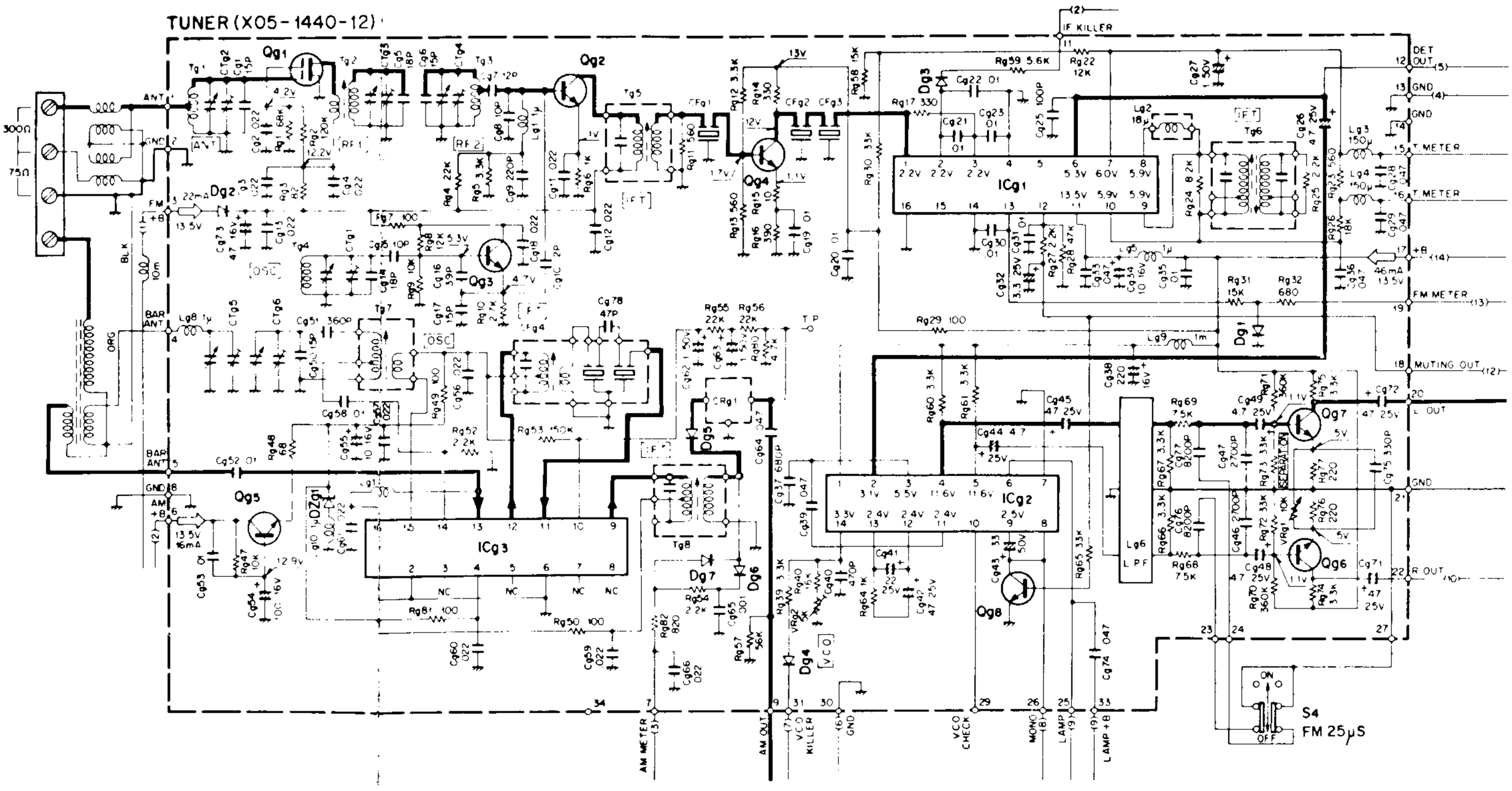


Qg1 : 3SK45(B) or (C)
Qg2,4 : 2SC381(O) or (R) or 2SC1674 (L) or (K)
Qg3 : 2SC1342 (A) or (B)
Qg5 : 2SC945 (Q) or 2SC828A (Q)
Qg6,7 : 2SC1222 (U)
Qg8 : 2SC945 (Q) or (R) or 2SC828A (P) or (Q)
ICg1 : HA1137W-05
ICg2 : HA-1156
ICg3 : AN-217 (BB) or (AB) or (CB)
Dg1~4,7 : 1S2076 or 1S1555
Dg5,6 : 1N60
DZg1 : BZ090