KENWOOD

STEREO RECEIVER

KR-7200 ①

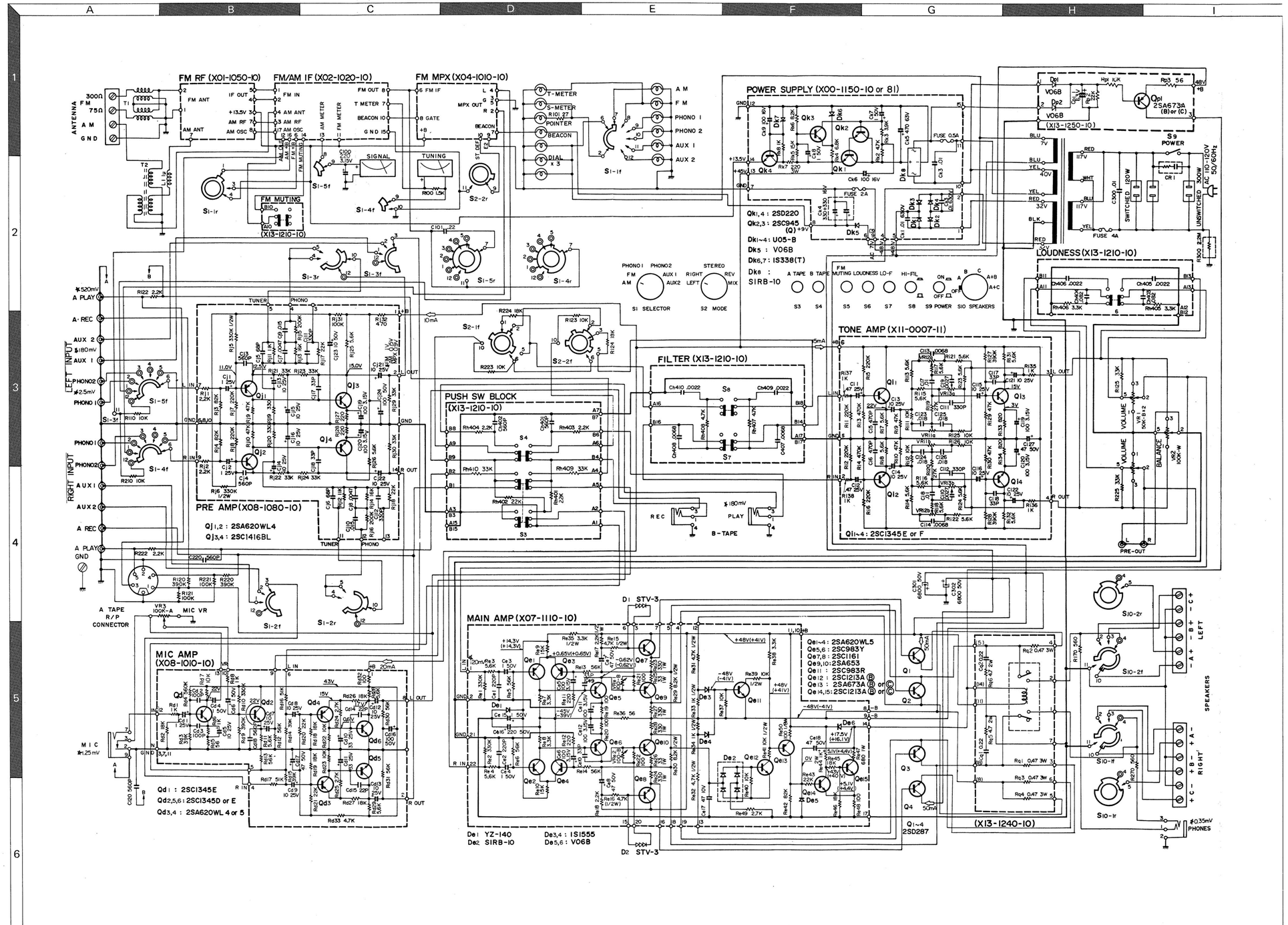

SPECIFICATIONS

FM TUNER SECTION

Antenna Impedance		300/75Ω
Usable Sensitivity (IHF)		1.6μV
Harmonic Distortion (At 400Hz 100% Mod.)		
MONO		0.4%
STEREO		0.6%
Signal to Noise Ratio		68 dB
Capture Ratio		1.5 dB
Selectivity (Alt.CH.) (IHF)		75 dB
Image Rejection		90 dB
IF Rejection		100 dB
Spurious Signal Rejection		100 dB
AM Suppression		70 dB
Stereo Separation (at 1kHz)		40 dB
(at 10kHz)		25 dB
Sub Carrier Suppression		60 dB
Muting Level		10μV
Quieting Slope	55 dB	5μV
	60 dB	10μV
	68 dB	50μV
Frequency Response		20～15 KHz +0.5dB, −1.5dB
Front End		3FET (1DG), 4 Gang
IF Stage		1 IC, 3 element mechanical filter

AM TUNER SECTION

Antenna	Built in ferrite antenna and external antenna terminals.
Usable Sensitivity (IHF)	15μV
Signal to Noise Ratio	45 dB
Selectivity (IHF)	35 dB
Image Rejection	70 dB
IF Rejection	70 dB
Front End	3 Gang
IF Stage	2 stages

AMPLIFIER SECTION

Dynamic Power Output (IHF)		
Both CH. 4Ω 1 kHz		260 Watt
Both CH. 8Ω 1 kHz		210 Watt
Continuous Power Output		
Each CH. 4Ω 1 kHz		90/90 watts
Each CH. 4Ω 1 kHz		70/70 watts
Both CH. 8Ω 1 kHz		75/75 watts
Both CH. 8Ω 1 kHz		60/60 watts
Both CH. 8Ω 20～20 kHz		55/55 watts
Harmonic Distortion (at rated)		0.5%
(at −3 dB rated)		0.1%
I. M. Distortion (at rated)		0.5%
(at −3 dB rated)		0.1%
Frequency Response (High Level Input)		20～40 kHz ±2 dB
Power Band Width (IHF)		10～30 kHz
Input Sensitivity		
PHONE 1	2.5 mV	50kΩ
PHONO 2	2.5 mV	50kΩ
MIC	1.25mV	10kΩ
AUX 1	180 mV	80 kΩ
AUX 2	180 mV	80kΩ
TAPE PLAY A	520 mV	50kΩ
TAPE PLAY B	180 mV	50kΩ
Recording Output		
TAPE REC A	180 mV	
TAPE REC B	180 mV	
DIN	36 mV	
Damping Factor (at 8Ω)	50	
Hum and Noise		
PHONO 1	65 dB	
PHONO 2	65 dB	
MIC	55 dB	
AUX 1	75 dB	
AUX 2	75 dB	
TAPE PLAY A	75 dB	
TAPE PLAY B	75 dB	
Speaker Impedance	4～16Ω	
Tone Control		
BASS (at 100 Hz)	±12 dB	
MID (at 1 kHz)	±8 dB	
TREBLE (at 10 kHz)	±12 dB	
Filter		
LOW (at 100 Hz)	−7 dB	
HIGH (at 10 kHz)	−10 dB	
Loudness Control (−30 dB)		
at 100 Hz	+10 dB	
at 10 kHz	+5 dB	

GENERAL

Switches:	SPEAKERS	OFF–A–B–C–A+B–A+C
	SELECTOR	AM–FM–PHONO 1–PHONO 2–AUX 1–AUX 2
	MODE	LEFT–RIGHT–STEREO REV–MIX TAPE MONITOR A, TAPE MONITOR B, LOW–HIGH FILTER, FM MUTING, LOUDNESS, MIC jack with VR
AC Outlets	SWITCHED	2
	UNSWITCHED	1
Semiconductors		3 FETs, 1 IC, 61 Transistors, 42 Diodes, 1 Thermistor
Power Consumption at full power		350 watts
at no signal		40 watts
Dimensions		17-1/8"(W) x 5-3/4"(H) x 14" (D)
Weight		29.5 lbs.
Walnut Cabinet (included in price)		YES

www.hifiengine.com

FM/AM IF (X02-1020-10)

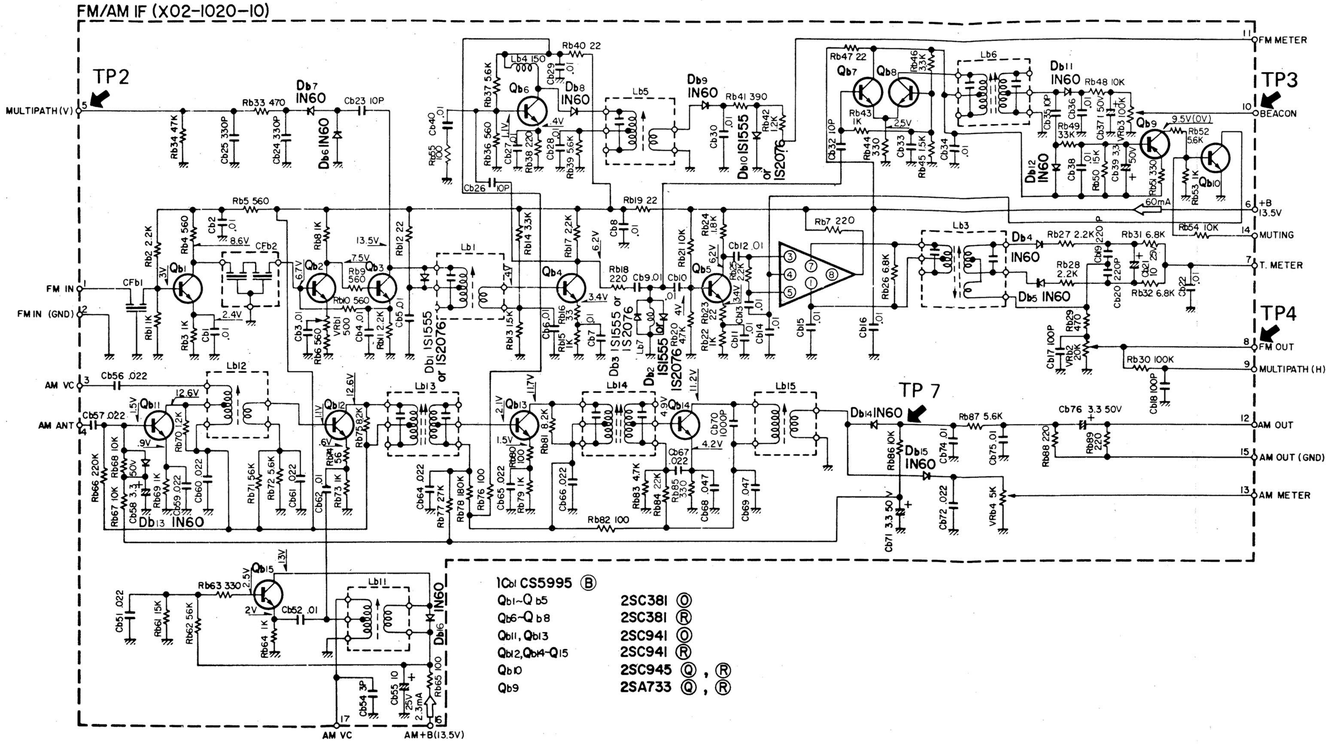

1Cb1 CS5995 Ⓑ	
Qb1~Qb5	2SC381 Ⓞ
Qb6~Qb8	2SC381 Ⓡ
Qb11, Qb13	2SC941 Ⓞ
Qb12, Qb14~Q15	2SC941 Ⓡ
Qb10	2SC945 Ⓠ, Ⓡ
Qb9	2SA733 Ⓠ, Ⓡ

FM RF (X01-1050-10)

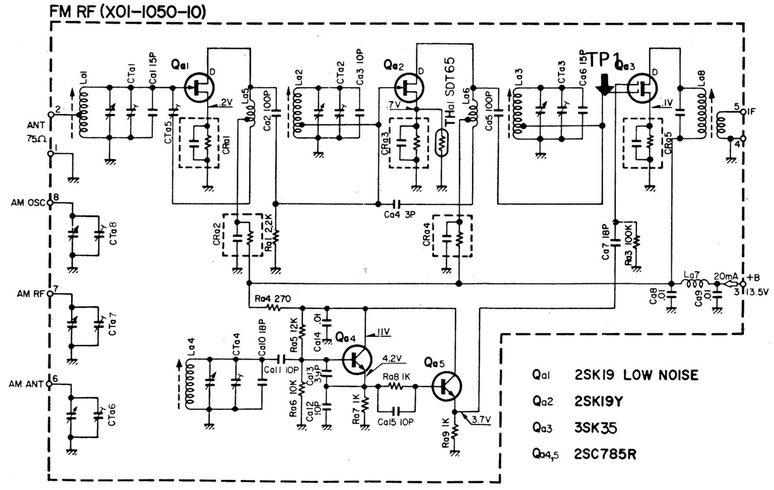

Qa1	2SK19 LOW NOISE
Qa2	2SK19Y
Qa3	3SK35
Qa4,5	2SC785R

FM MPX (X04-1010-10)

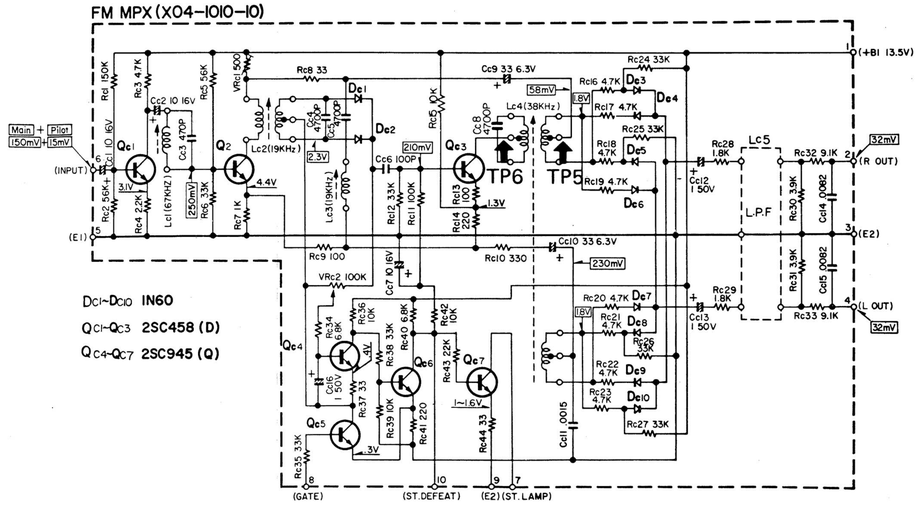

Dc1~Dc10 IN60

Qc1~Qc3	2SC458 (D)
Qc4~Qc7	2SC945 (Q)

■ For 110-120/220-240V area (1)

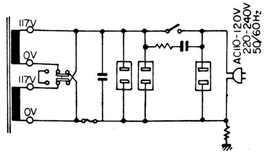

■ For 110-120/220-240V area (2)

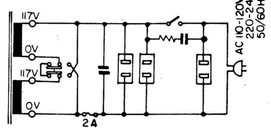

■ For the sets sold in Canada only.

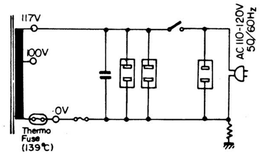

■ For the sets sold in Europe except England.

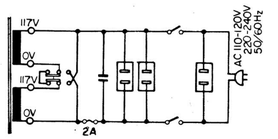

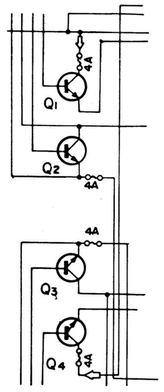

www.hifiengine.com

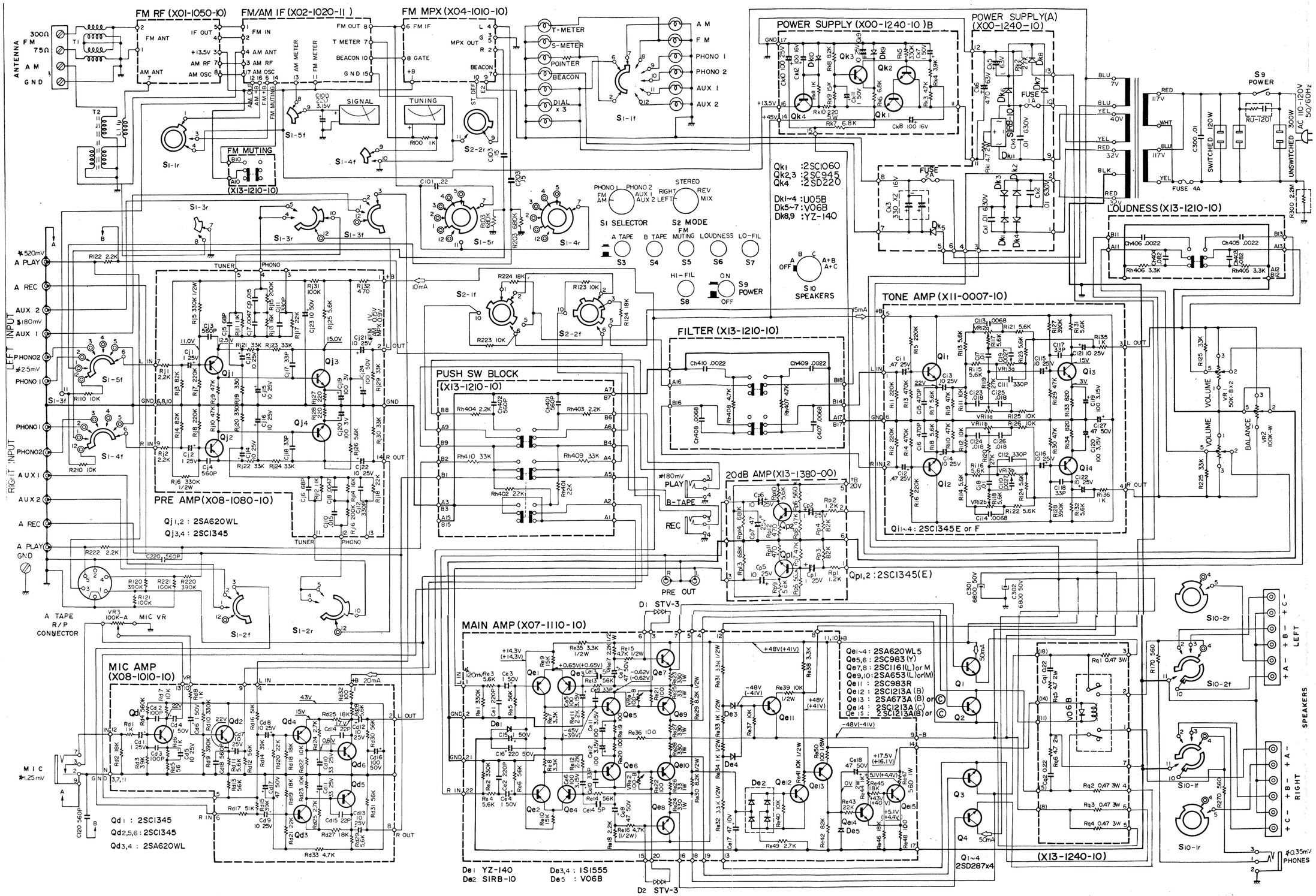
FM RF (X01-1050-10)
FM/AM IF (X02-1020-11)
FM MPX (X04-1010-10)
POWER SUPPLY (X00-1240-10)B
POWER SUPPLY(A) (X00-1240-10)
ANTENNA
300Ω FM
75Ω
AM
GND
T-METER
S-METER
POINTER
BEACON
DIAL x 3
A M
F M
PHONO 1
PHONO 2
AUX 1
AUX 2
SIGNAL
TUNING
FM MUTING
(X13-1210-10)
Qk1 :2SC1060
Qk2,3 :2SC945
Qk4 :2SD220
Dk1~4 :U05B
Dk5~7 :V06B
Dk8,9 :YZ-140
S1 SELECTOR
S2 MODE
A TAPE
B TAPE
FM MUTING
LOUDNESS
LO-FIL
HI-FIL
S9 POWER
S10 SPEAKERS
LOUDNESS (X13-1210-10)
TONE AMP (X11-0007-10)
FILTER (X13-1210-10)
PUSH SW BLOCK (X13-1210-10)
20dB AMP (X13-1380-00)
PRE AMP (X08-1080-10)
Qj1,2 : 2SA620WL
Qj3,4 : 2SC1345
Qi1~4 : 2SC1345E or F
Qp1,2 : 2SC1345(E)
PRE OUT
A TAPE R/P CONNECTOR
MIC VR
MIC AMP (X08-1010-10)
Qd1 : 2SC1345
Qd2,5,6 : 2SC1345
Qd3,4 : 2SA620WL
MAIN AMP (X07-1110-10)
Qe1~4 : 2SA620WL5
Qe5,6 : 2SC983 (Y)
Qe7,8 : 2SC1161(L) or M
Qe9,10 : 2SA653 (L) or (M)
Qe11 : 2SC983R
Qe12 : 2SC1213A (B)
Qe13 : 2SA673A (B) or (C)
Qe14 : 2SC1213A (C)
Qe15 : 2SC1213A (B) or (C)
Q1~4 2SD287x4
(X13-1240-10)
De1 YZ-140
De2 SIRB-10
De3,4 : 1S1555
De5 : V06B
D1 STV-3
D2 STV-3
SPEAKERS
LEFT
RIGHT
PHONES
LEFT INPUT
RIGHT INPUT
A PLAY
A REC
AUX 2
AUX 1
PHONO2
PHONO 1
GND
MIC

FM/AM IF (X02-1020-11)

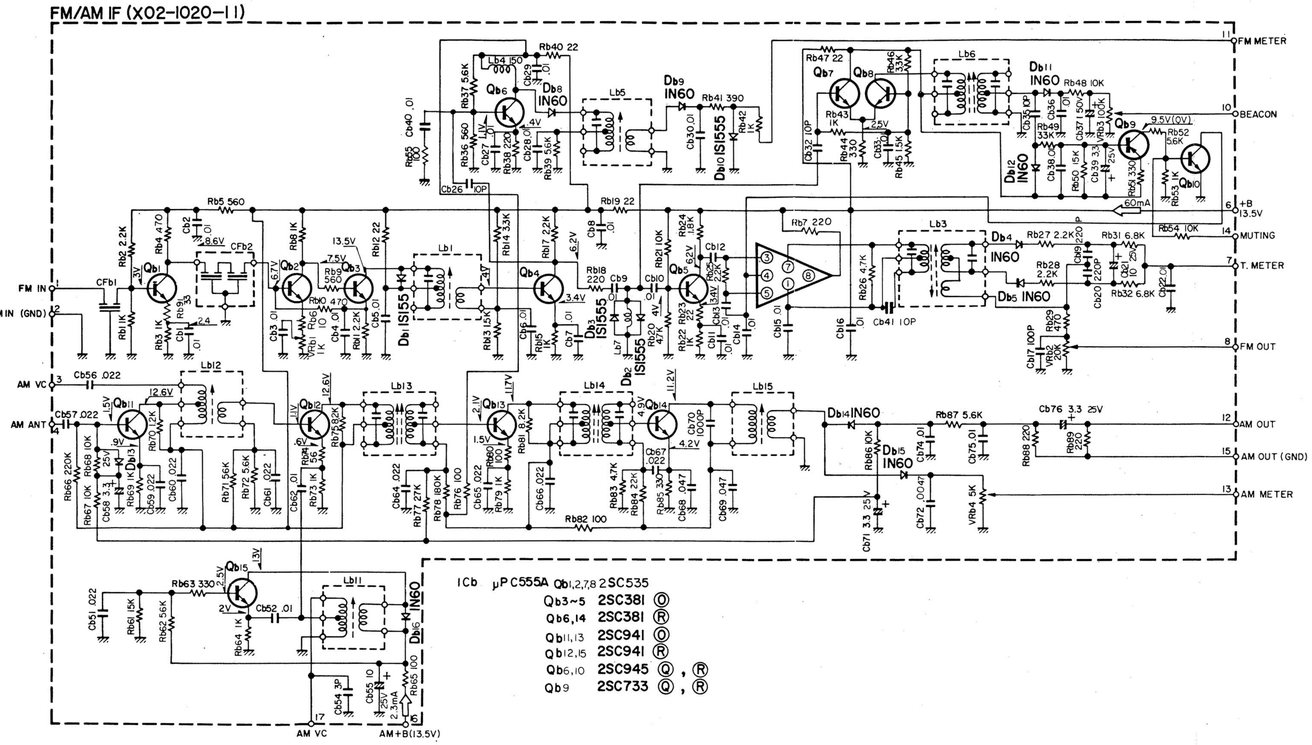

IC: μPC555A

Qb1,2,7,8	2SC535
Qb3~5	2SC381 Ⓞ
Qb6,14	2SC381 Ⓡ
Qb11,13	2SC941 Ⓞ
Qb12,15	2SC941 Ⓡ
Qb6,10	2SC945 Ⓠ, Ⓡ
Qb9	2SC733 Ⓠ, Ⓡ

FM RF (X01-1050-10)

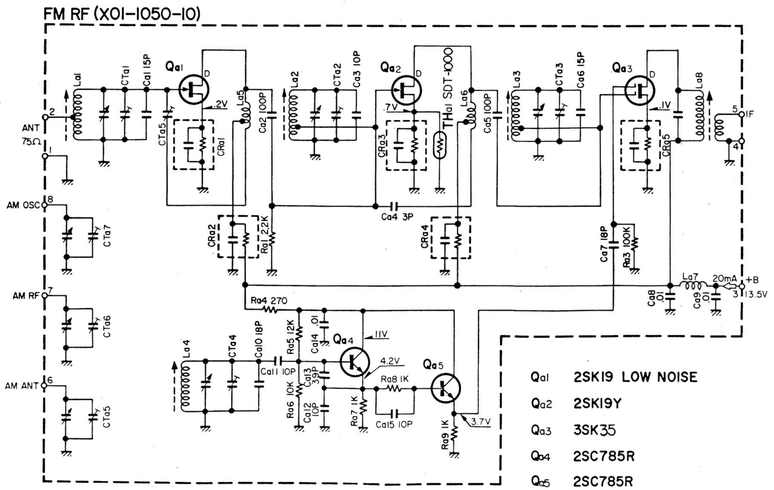

Qa1	2SK19 LOW NOISE
Qa2	2SK19Y
Qa3	3SK35
Qa4	2SC785R
Qa5	2SC785R

FM MPX (X04-1010-10)

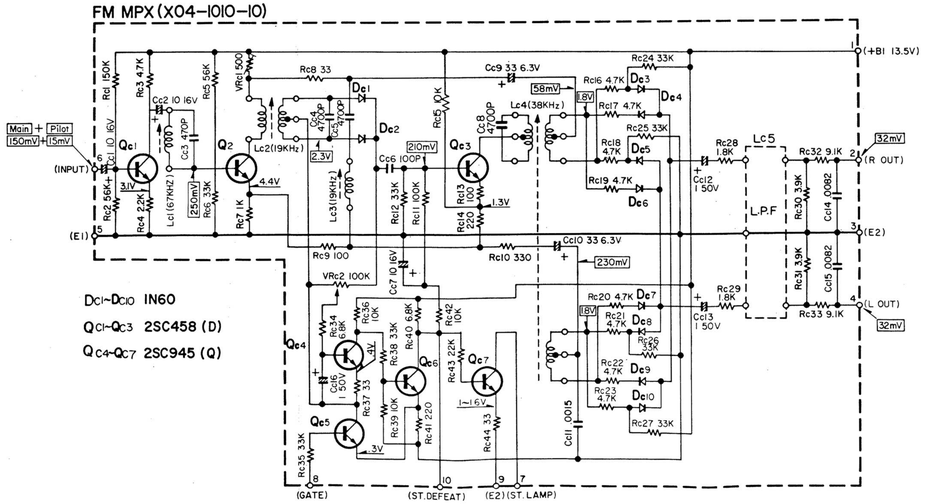

Dc1~Dc10 IN60

Qc1~Qc3	2SC458 (D)
Qc4~Qc7	2SC945 (Q)

■ For 110-120/220-240V area (1)

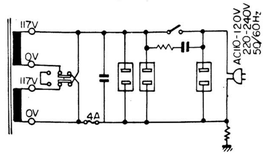

■ For 110-120/220-240V area (2)

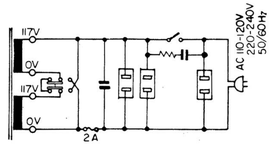

■ For the sets sold in Canada only.

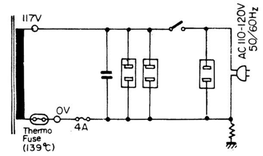
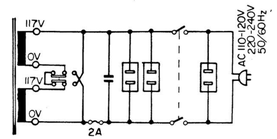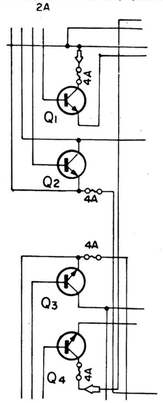
■ For the sets sold in Europe except England.