KENWOOD

HI/FI STEREO COMPONENTS

SERVICE MANUAL

KR-7200

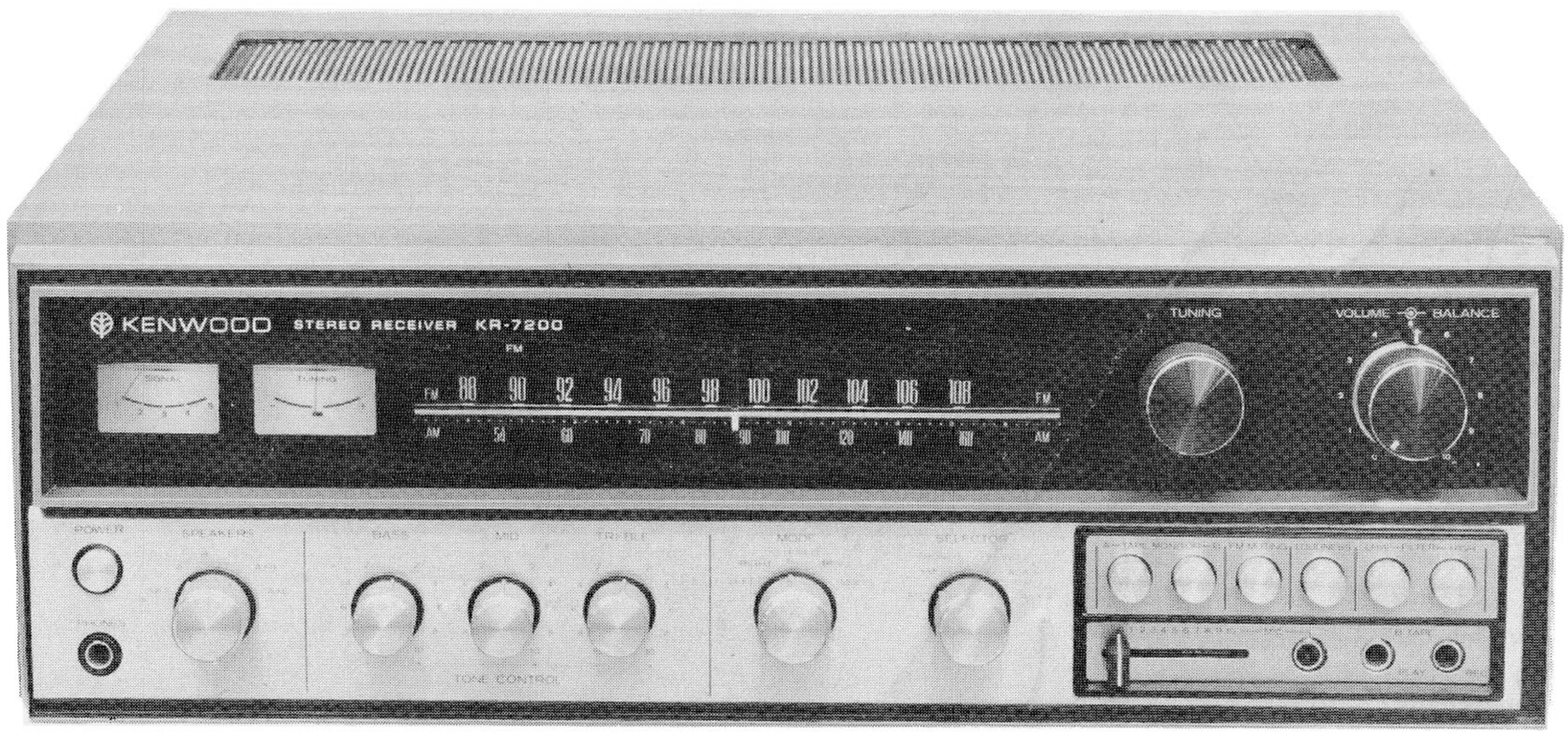

STEREO RECEIVER

www.hifiengine.com

SPECIFICATIONS

FM TUNER SECTION

Antenna Impedance	300/75Ω
Usable Sensitivity (IHF)	1.6μV
Harmonic Distortion	
(At 400Hz 100% Mod.)	
MONO	0.4%
STEREO	0.6%
Signal to Noise Ratio	68 dB
Capture Ratio	1.5 dB
Selectivity (Alt.CH.) (IHF)	75 dB
Image Rejection	90 dB
IF Rejection	100 dB
Spurious Signal Rejection	100 dB
AM Suppression	70 dB
Stereo Separation (at 1kHz)	40 dB
(at 10kHz)	25 dB
Sub Carrier Suppression	60 dB
Muting Level	10μV
Quieting Slope	55 dB 5μV
	60 dB 10μV
	68 dB 50μV
Frequency Response	20 ~ 15 KHz +0.5dB, −1.5dB
Front End	3FET (1DG), 4 Gang
IF Stage	1 IC, 3 element mechanical filter

AM TUNER SECTION

Antenna	Built in ferrite antenna and external antenna terminals.
Usable Sensitivity (IHF)	15μV
Signal to Noise Ratio	45 dB
Selectivity (IHF)	35 dB
Image Rejection	70 dB
IF Rejection	70 dB
Front End	3 Gang
IF Stage	2 stages

AMPLIFIER SECTION

Dynamic Power Output (IHF)	
Both CH. 4Ω 1 kHz	260 Watt
Both CH. 8Ω 1 kHz	210 Watt
Continuous Power Output	
Each CH. 4Ω 1 kHz	90/90 watts
Each CH, 4Ω 1 kHz	70/70 watts
Both CH. 8Ω 1 kHz	75/75 watts
Both CH. 8Ω 1 kHz	60/60 watts
Both CH. 8Ω 20 ~ 20 kHz	55/55 watts
Harmonic Distortion (at rated)	0.5%
(at −3 dB rated)	0.1%
I. M. Distortion (at rated)	0.5%
(at −3 dB rated)	0.1%
Frequency Response	20 ~ 40 kHz ±2 dB
(High Level Input)	
Power Band Width (IHF)	10 ~ 30 kHz

Input Sensitivity		
PHONE 1	2.5 mV	50kΩ
PHONO 2	2.5 mV	50kΩ
MIC	1.25mV	10kΩ
AUX 1	180 mV	80 kΩ
AUX 2	180 mV	80kΩ
TAPE PLAY A	520 mV	50kΩ
TAPE PLAY B	180 mV	50kΩ
Recording Output		
TAPE REC A	180 mV	
TAPE REC B	180 mV	
DIN	36 mV	
Damping Factor (at 8Ω)	50	
Hum and Noise		
PHONO 1	65 dB	
PHONO 2	65 dB	
MIC	55 dB	
AUX 1	75 dB	
AUX 2	75 dB	
TAPE PLAY A	75 dB	
TAPE PLAY B	75 dB	
Speaker Impedance	4 ~ 16Ω	
Tone Control		
BASS	**(at 100 Hz)**	±12 dB
MID	**(at 1 kHz)**	±8 dB
TREBLE	**(at 10 kHz)**	±12 dB
Filter		
LOW	**(at 100 Hz)**	−7 dB
HIGH	**(at 10 kHz)**	−10 dB
Loudness Control (−30 dB)		
at 100 Hz		+10 dB
at 10 kHz		+5 dB

GENERAL

Switches:	**SPEAKERS**	OFF−A−B−C−A+B−A+C
	SELECTOR	AM−FM−PHONO 1−PHONO 2−AUX 1−AUX 2
	MODE	LEFT−RIGHT−STEREO REV−MIX TAPE MONITOR A, TAPE MONITOR B, LOW−HIGH FILTER, FM MUTING, LOUDNESS, MIC jack with VR
AC Outlets	**SWITCHED**	2
	UNSWITCHED	1
Semiconductors		3 FETs, 1 IC, 61 Transistors, 42 Diodes, 1 Thermistor
Power Consumption		
at full power		350 watts
at no signal		40 watts
Dimensions		17-1/8"(W) x 5-3/4"(H) x 14"(D)
Weight		29.5 lbs.
Walnut Cabinet (included in price)		YES

www.hifiengine.com

TROUBLE SHOOTING

Symptom	CHECK Unit (page)						
	R.f. (4)	I.f. (4 ~ 5)	MPX (5)	Pre (6)	Mic (6)	Tone (6)	Main (7)
No sound				●	●	●	●
Distortion		●					●
Noise		●		●	●	●	●
Dynamic range				●			
Hum				●	●		
Crosstalk							
Shifting voltage of output terminal							●
Oscillation							●
Heated transistor							●
Poor tone						●	
Poor output of low frequency in PHONO position				●			
Protection							●
Out of dial calibrations	●						
Not light stereo indicator		●	●				
Drift	●						
Separation			●				
Interference	●	●					
Carrier-leak			●				
Sensitivity	●	●					
Muting		●					
Meter		●					
Not receive f.m. broadcastings	●	●					
Not receive a.m. broadcastings		●					

Note: This trouble shooting has not power supply, sub unit and etc.

www.hifiengine.com

■ R.f. Unit (X01-1050-10)

Complaint	Possible cause	Repairs
Not receive f.m. broadcastings	Poor connection of supply voltage line.	Check the terminal No. 3.
	Faulty transistors $Qa_{4,5}$.	Check and replace.
	Poor adjustment of trimmer CTa_5.	Readjustment.
Poor sensitivity	Poor adjustment.	Readjustment.
	Faulty FETs $Qa_1 \sim 3$.	Check and replace.
	Poor connection of supply voltage line.	Check coils $La_5 \sim 7$.
Out of calibrations	Poor adjustment of local oscillation.	Readjustment.
Drift	Faulty trimmer CTa_4 of local oscillation.	Check and replace.
Interference	Poor adjustment.	Readjustment.

■ I.f. Unit (X02-1020-10)

Not light stereo indicator	Poor adjustment of coil Lb_6 and potentiometer VRb_3.	Readjustment
	Faulty transistors $Qb_{7,8}$ and diode Db_{11}.	Check and replace.
	Faulty or poor adjustment of MPX unit.	Check and replace, or readjust.
Not operate f.m. muting	Faulty transistors $Qb_{9,10}$ and diode Db_{12}.	Check and replace.
Not receive broadcastings with muting off (but signal meter's pointer swings)	Faulty transistor Qb_{10}.	Check collector of Qb_{10} to be 0V under operating.
	Faulty IC ICb_1.	Check and replace.
Distortion	Faulty diodes $Db_{4,5}$ and coil Lb_3.	Check and replace.
	Poor adjustment of coil Lb_3.	Readjustment
Poor f.m. sensitivity (but signal meter's pointer swings)	Faulty transistors $Qb_{4,5}$, and IC ICb_1.	Check and replace.
(Not meter's pointer swings)	Faulty transistors $Qb_1 \sim 3$.	Check and replace.

www.hifiengine.com

■ I.f. Unit (X02-1020-10)

Complaint	Possible cause	Repairs
Not receive f.m. broad-castings (but singal meter's pointer swings)	Faulty transistor $Qb_{4,5}$, and IC ICb_1.	Check and replace.
(But meter's pointer not swing)	Poor connection of supply voltage line.	Check the terminal No. 6.
Not receive (a.m.)	Faulty transistors $Qb_{11 \sim 15}$.	Check and replace.
Noise (a.m.)	Faulty variable capacitor.	Check it.
Interference (a.m.)	Faulty trans. and coils $Lb_{11 \sim 15}$.	Check and replace.
Distortion (a.m.)	Faulty diodes $Db_{13,14}$.	Check and replace.
Poor sensitivity (a.m.)	Faulty transistors $Qb_{11 \sim 14}$.	Check and replace.

■ MPX Unit (X04-1010-10)

Not light stereo indicator	Faulty pilot lamp.	Check and replace.
	Poor i.f. stage.	Readjustment
	Poor adjustment of potentiometer VRc_2.	Readjustment
	Faulty transistors $Qc_{2,4 \sim 7}$.	Check and replace.
Not separate (but stereo indicator lights)	Faulty of transistor Qc_3 and coil Lc_4.	Check and replace.
Poor separation	Poor adjustment of coils $Lc_{2 \sim 4}$ and potentiometer VRc_1.	Readjustment
	Faulty diodes $Dc_{3 \sim 10}$.	Check and replace.
Carrier-leak	Faulty diodes $Dc_{3 \sim 10}$.	Check and replace.
	Faulty capacitor $Cc_{9,10}$.	Check and replace.
	Faulty low-pass filter Lc_5.	Check and replace.

www.hifiengine.com

■ Preamp Unit (X08-1080-10)

Complaint	Possible cause	Repairs
No sound.	Faulty transistors $Qj_{1 \sim 4}$.	Check and replace.
Noise	Faulty transistors $Qj_{1,2}$, resistors $Rj_{5,6,25,26}$, and capacitors $Cj_{1,2,21,22}$.	Check and replace.
Dynamic range	Faulty transistors $Qj_{1,2}$ and capacitors $Cj_{1,2}$.	Check and replace.
Hum	Faulty capacitor $Cj_{23,24}$.	Check and replace.
Poor output of low frequency at phono position	Faulty capacitor $Cj_{15,16,19,20}$.	Check and replace.

■ Micamp Unit (X08-1010-10)

Cross-talk	Faulty transistor Qd_2.	Check and replace.
	Poor connection of mic unit and pushbutton switch.	Check
No sound except mic.	Faulty transistors $Qd_{3 \sim 4}$.	Check and replace.
No sound on mic.	Faulty transistors $Qd_{1,2}$, and potentiometer VR_3.	Check and replace.
	Poor connection of mic unit and push button switch.	Check
Noise at aux position with volume of max.	Faulty transistors $Qd_{3,4}$ and resistors $Rd_{18 \sim 21}$.	Check and replace.

■ Toneamp Unit (X11-0007-11)

No sound.	Faulty transistors $Qi_{1 \sim 4}$.	Check and replace.
Boost and cut	Faulty potentiometers $VRi_{1 \sim 3}$ and transistors $Qi_{3,4}$.	Check and replace.
Noise	Faulty transistors $Qi_{1 \sim 4}$, resistors $Ri_{27,28}$, and capacitors $Ci_{1 \sim 4,15,16,21,22}$.	Check and replace.

www.hifiengine.com

■ Mainamp Unit (X07-1110-10)

Complaint	Possible cause	Repairs
No sound. (protection relay is off.)	In case of operating protections, faulty transistors $Qe_{1 \sim 10}$.	Check and replace (replacement order, first $Qe_{7 \sim 10}$, second $Qe_{5,6}$, third $Qe_{1 \sim 4}$).
	Faulty resistors $Rq_{2,3}$.	Check and replace.
	In case of not operating protections, faulty transistors $Qe_{13 \sim 15}$.	Check and replace.
Distortion	Faulty resistors $Rq_{1 \sim 4}$.	Check and replace.
	Output waveform. (1 kHz) 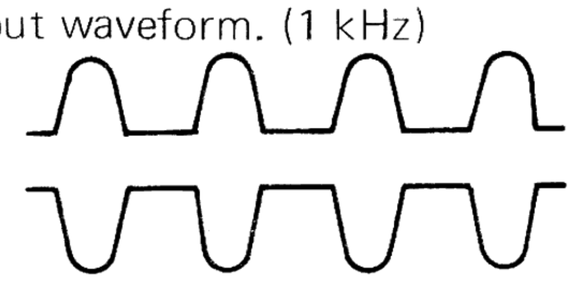 →	Check resistors $Rq_{3,4}$
	→	Check resistors $Rq_{1,2}$
(Crossover distortion.)	Faulty varistors $D_{1,2}$, and potentiometers $VRe_{1,2}$.	Check and replace.
Hum	Faulty capacitor Ce_{16}.	Check and replace.
Noise	Faulty transistors $Qe_{1 \sim 4}$, diode De_1 and capacitors $Ce_{3,4,7,8}$.	Check and replace.
Shock noise	Faulty capacitor Ce_{18} and transistors $Qe_{14,15}$.	Check and replace.
Shifting voltage of output terminal	Faulty transistors $Qe_{1 \sim 4}$, and diode De_1.	Check and replace.
Oscillation	Faulty capacitor $Ce_{1,2,9,10}$, $Cq_{1,2}$, and resistor $Rq_{5,6}$.	Check and replace.
Heated power transistor.	Faulty potentiometers $VRe_{1,2}$, and varistors $D_{1,2}$.	Check and replace.
Heated drive stage transistor	Faulty resistors $Rq_{1 \sim 4}$.	Check and replace.
Misoperation of protection circuit	Faulty diodes $De_{2 \sim 4}$, and transistors $Qe_{11,12}$.	Check and replace.

www.hifiengine.com

ADJUSTMENT

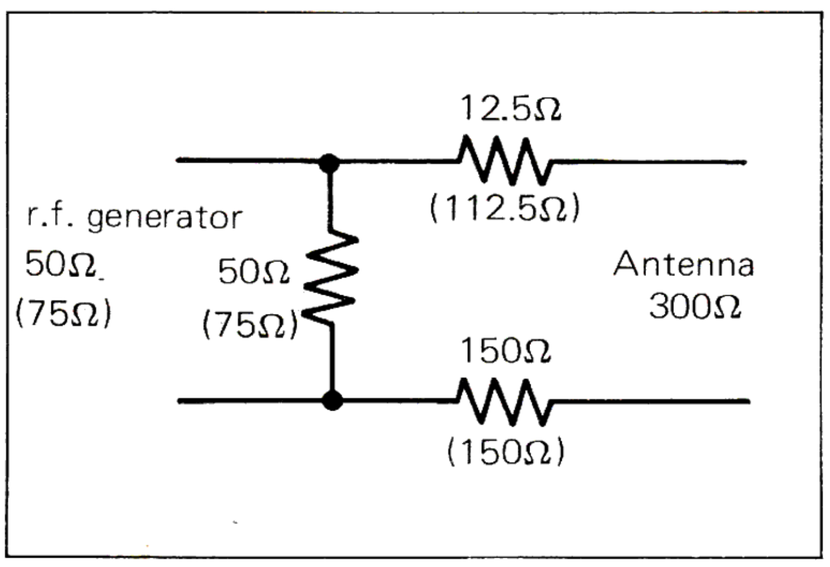

▲ Dummy antenna

[BEFORE ADJUSTMENT]

* Tuning dial is set to the proper point corresponding to no radio stations.
* The sweep and the r.f. generator are set to the minimum response on oscilloscope as possible.
* Connecting the r.f. generator to the antenna terminal use the dummy antenna . . . refer to figure.
* Use the insulated screwdriver adjusting the i.f. trans.
* SELECTOR is FM AUTO position.
* FM MUTING is OFF position except necessity.
* Test point shown in the schematic diagram.

[ADJUSTING FM-IFT]

1. Connect the sweep generator being set to 10.7 MHz to test point 1 (TP1) through a capacitor 3 pF.
2. Connect the oscilloscope to test point 2.
3. Adjust i.f. trans La8, Lb1 so that output is the best.

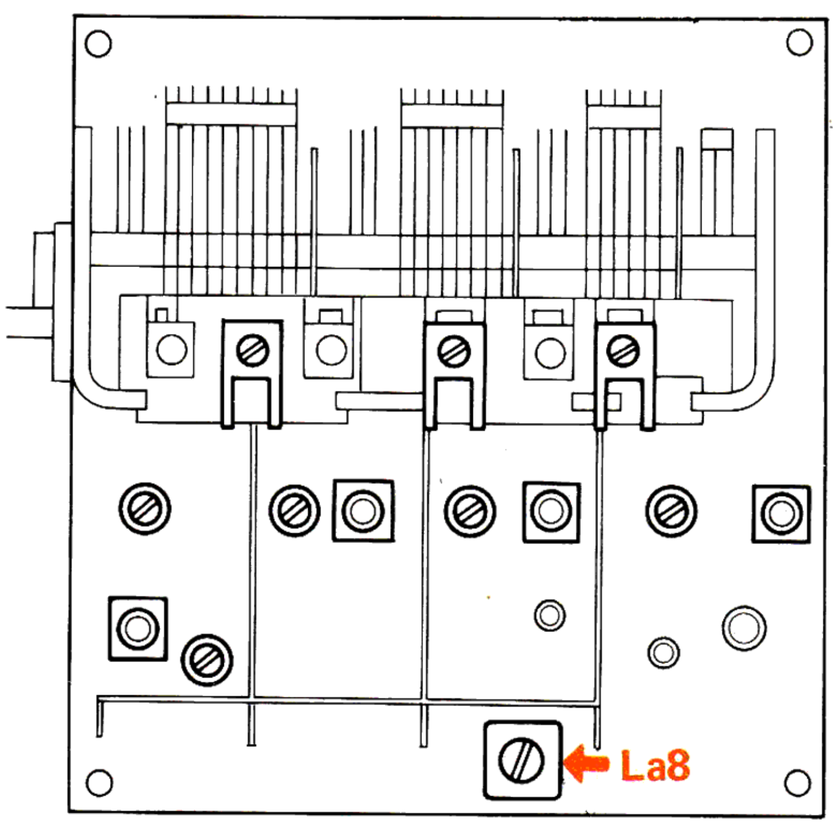

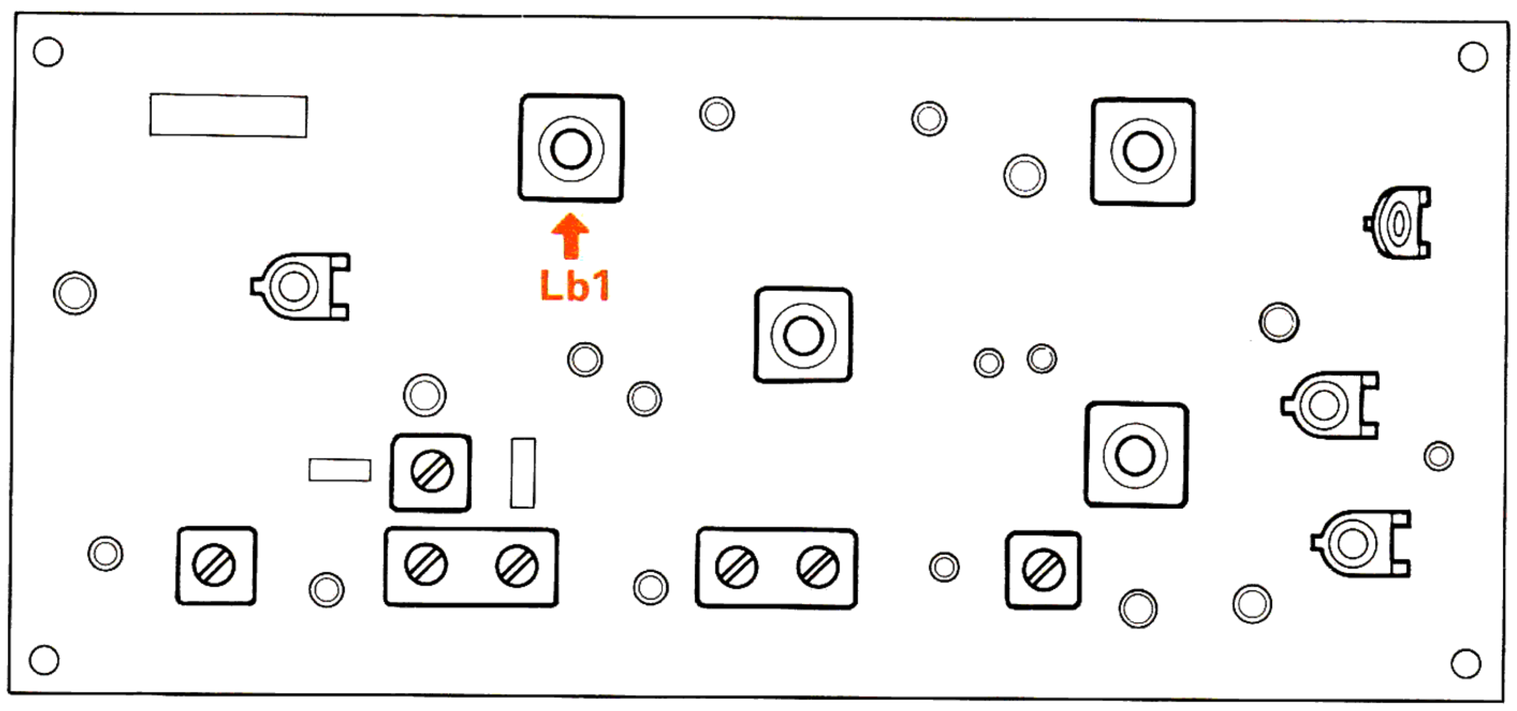

▼ Waveform of test point 2

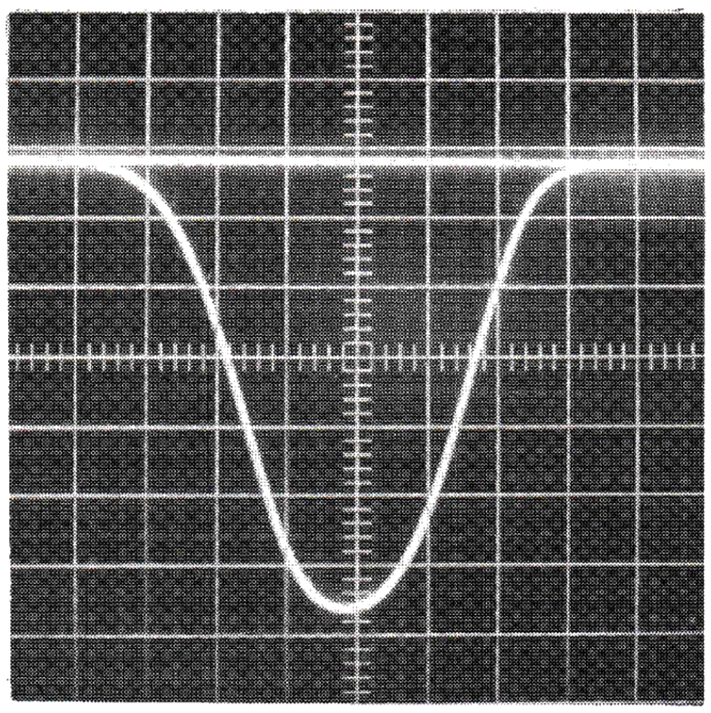

[ADJUSTING DISCRIMINATOR]

1. With no test equipments, adjust the secondary (top) of discriminator coil Lb3 so that tuning meter's pointer is between the center zone.
2. Connect d.c. voltmeter to test point 3.
3. Connect the r.f. generator being set 98 MHz, no modulation, antenna input of 5 ~ 7 μV to antenna terminal.
4. Adjust trigger coil Lb6 so that voltmeter is max.
5. Adjust meter coil Lb5 so that signal meter is max.
6. Set the output of r.f. generator so that voltmeter is 2.5V at test point 3.
7. Adjust the potentiometer VRb3 so that voltmeter is 2V at test point 3.
8. Switch the output of r.f. generator being set antenna input of 7μV to antenna terminal.
9. Adjust the potentiometer VRb1 so that voltmeter is 1.4V at test point 3.
10. Connect the r.f. generator being set 98 MHz, modulation of 400 Hz, deviation of 75 kHz, to antenna terminal, and the oscilloscope and VTVM to REC jack.
11. Adjust the primary (bottom) of discriminator coil Lb3 so that distortion is min.
12. Adjust the potentiometer VRb2 so that voltmeter is 1V at REC jack.

www.hifiengine.com

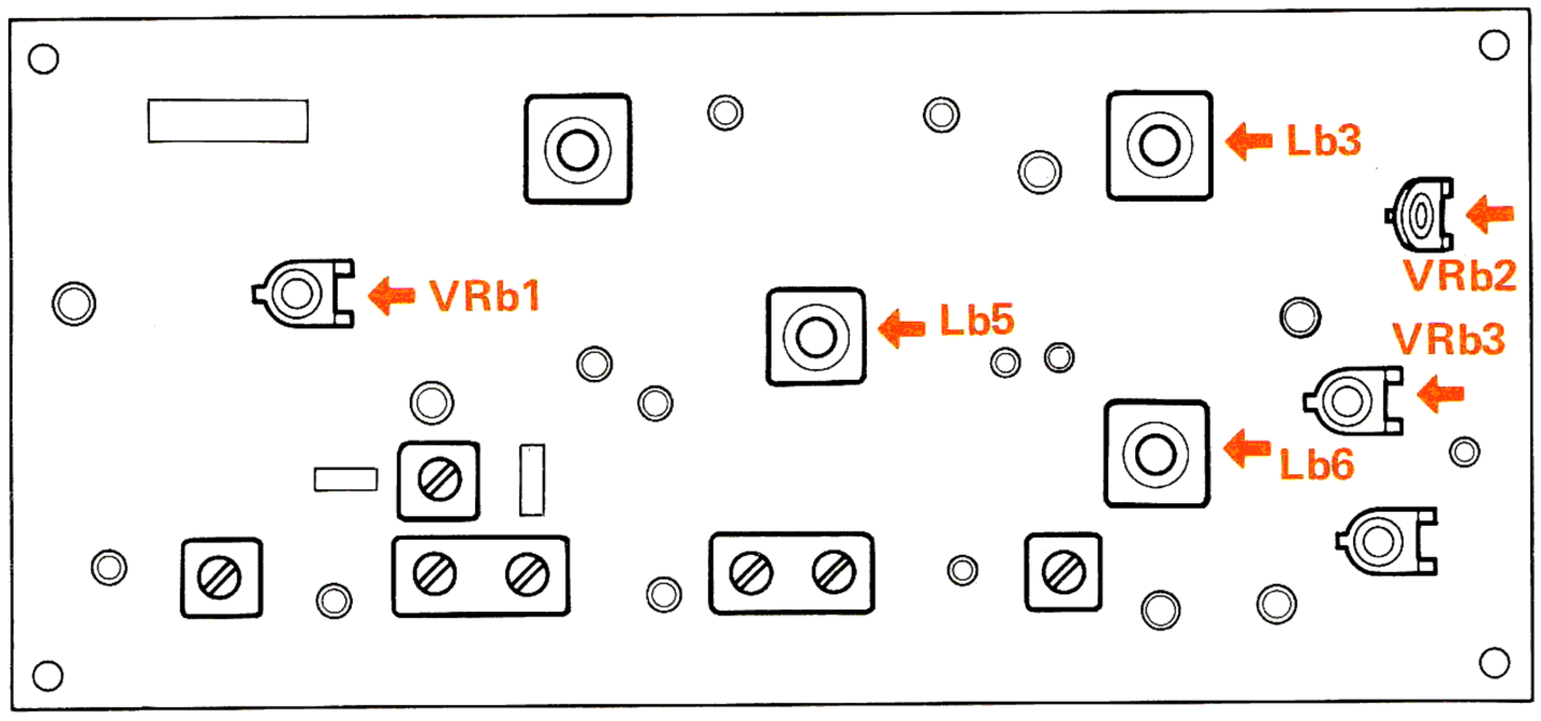

[ADJUSTING TRACKING]

1. Connect the r.f. generator to antenna terminal through a dummy antenna.
2. Set the r.f. generator to 90 MHz, the modulation of 400 Hz, the deviation of 75 kHz, and the input of 10 μV.
3. Connect the VTVM to the recording jack (REC jack).
4. Meet the dial pointer to 90 MHz on the dial calibrations.
5. Adjust the core of r.f. trans La1 ~ 3 and local oscillator coil La4 so that the output is the maximum.

1. Set the r.f. generator to 106 MHz, the modulation of 400 Hz, the deviation of 75 kHz and the input of 10 μV.
2. Meet the dial pointer to 106 MHz on the dial calibrations.
3. Adjust the trimmer CTa1 ~ 4 so that the output is the maximum.
   * If there is internal oscillation, adjust the trimmer CTa5.

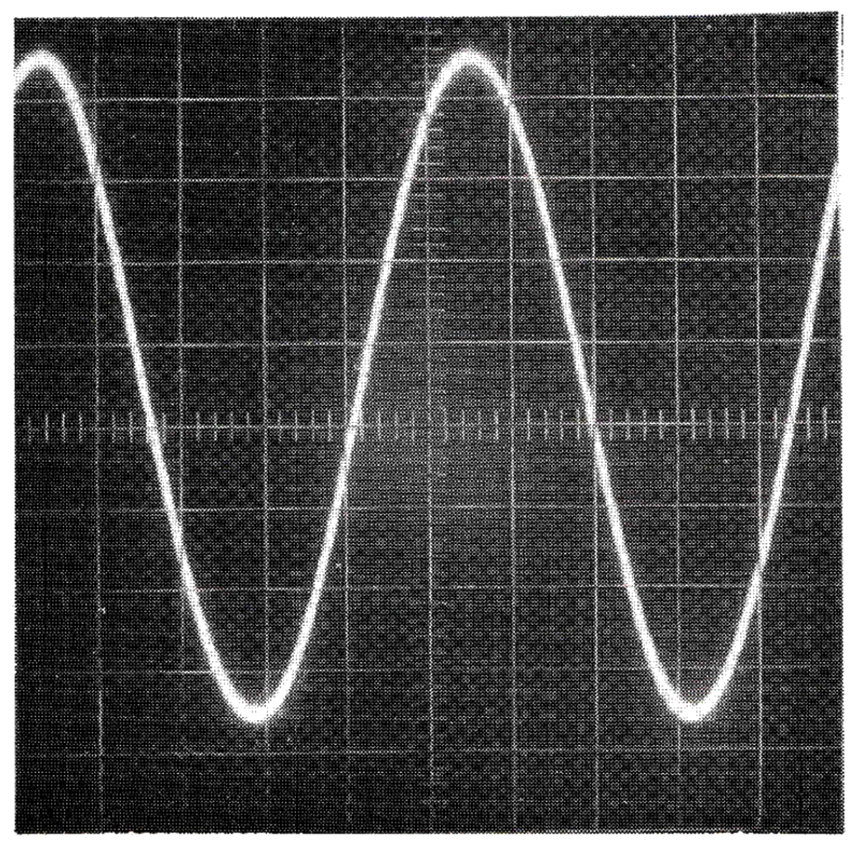

▲ Waveform of Rec jack

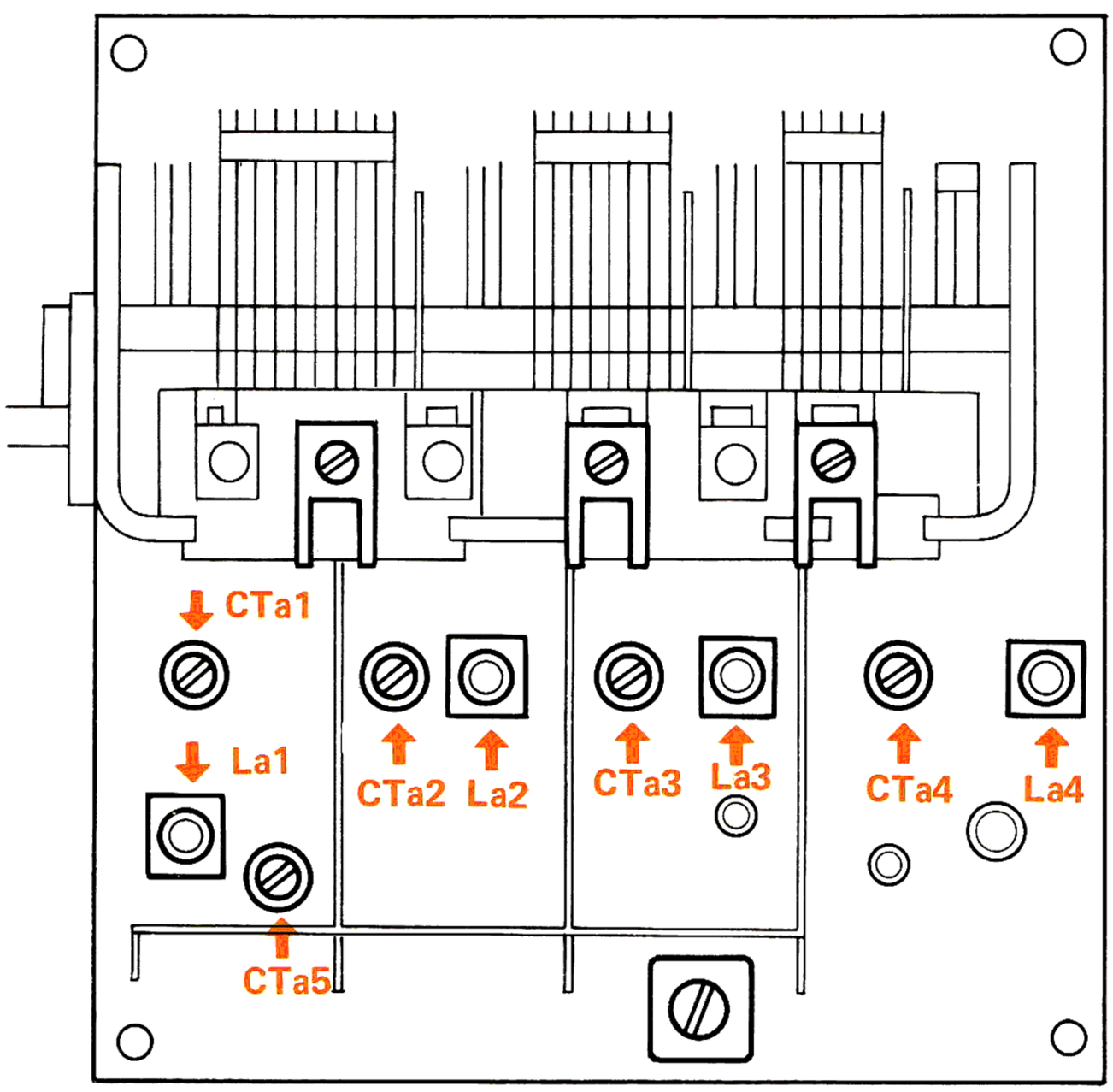

www.hifiengine.com

[ADJUSTING SCA FILTER]

1. Connect the audio generator being set to 67 kHz to the test point 4.
2. Connect the VTVM to the test point 5.
3. Adjust the core of Lc1 so that the output is the minimum.

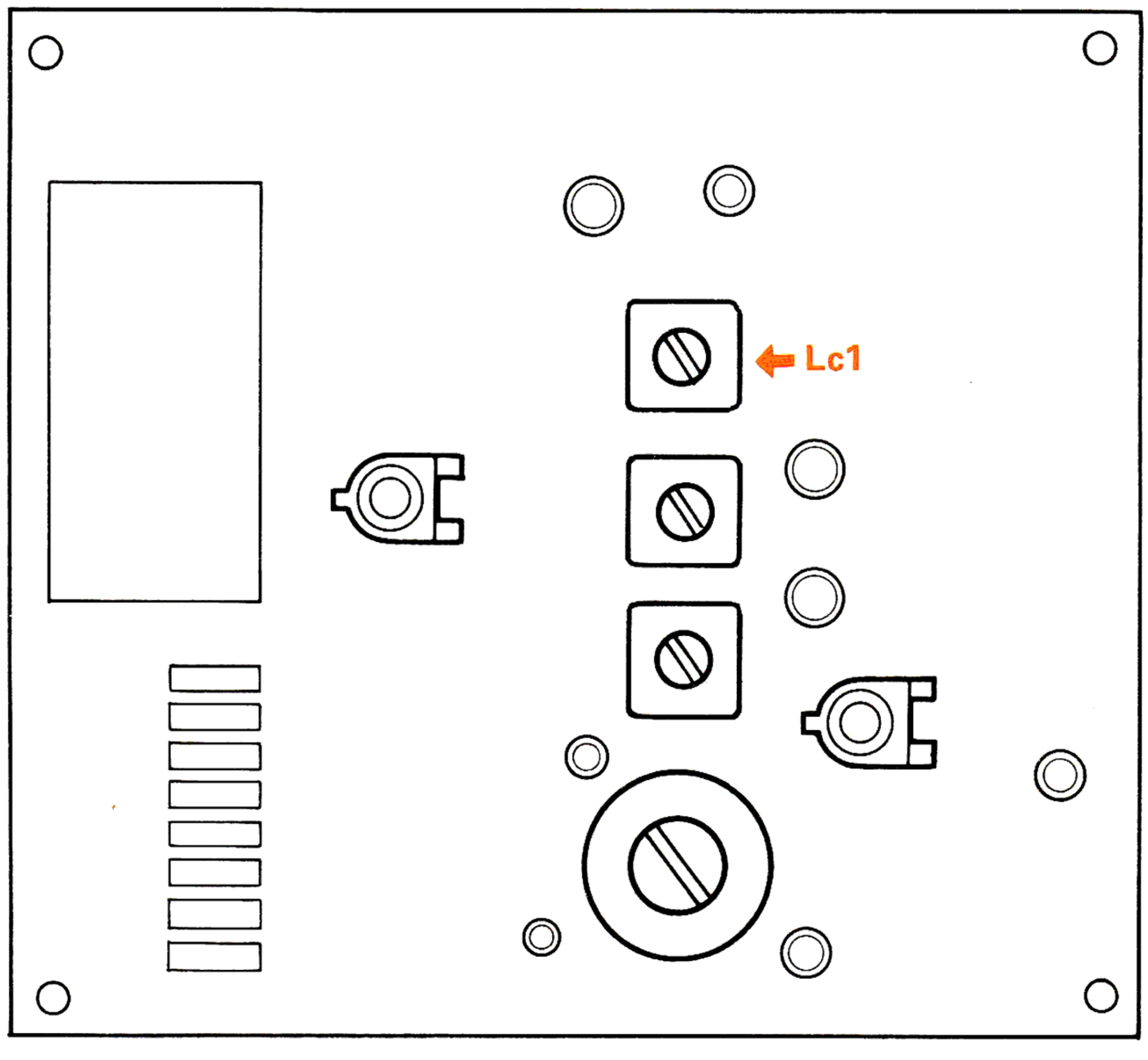

[ADJUSTING MPX]

1. Set the MPX generator to the following.

SELECTOR	→ A + B	PHASE	→ NORMAL
MODULATION	→ 400 Hz	DEVIATION	→ 67.5 kHz

2. Connect the r.f. generator to antenna terminal and the VTVM to the test point 6.
3. Adjust the core of Lc2 ~ 4 so that the output is the maximum.
4. Switch the selector of MPX generator of A - B (reverse).
5. Remove the VTVM to the REC jack.
6. Adjust the core of Lc4 so that the output is the best.
7. Switch the selector and deviation of the MPX generator to A + B and 40 kHz.
8. Adjust the potentiometer VRc2 so that stereo indicator is on.
9. Switch the selector of the MPX generator to A (R).
10. Adjust the potentiometer VRc1 so that the output is the minimum.
11. Switch the selector of the MPX generator to B (L).
12. Adjust the potentiometer VRc1 so that the output is the minimum.

Note: In case of difference between right and left set the potentiometer (VRc1) to average.

www.hifiengine.com

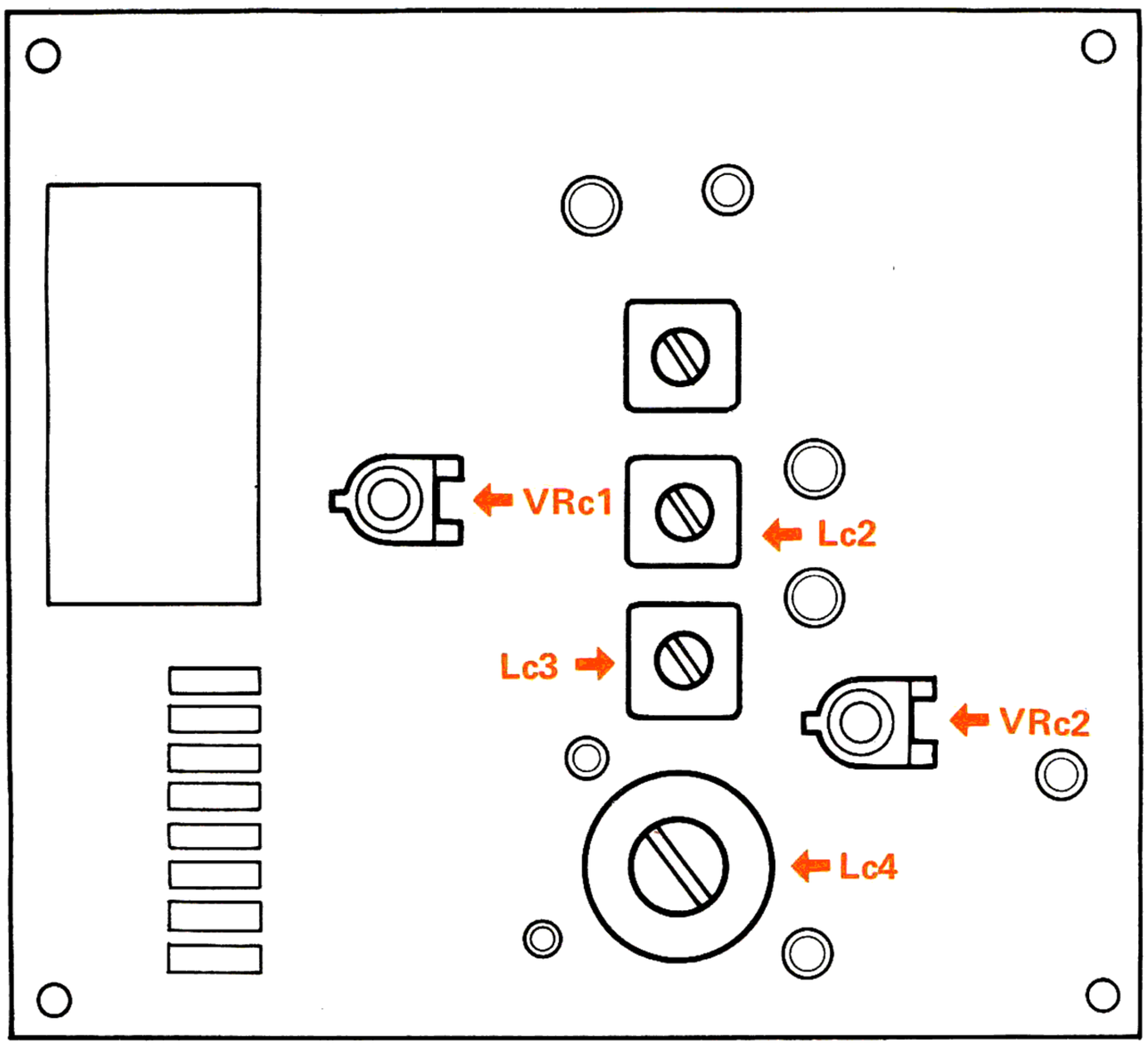

[ADJUSTING AM-IFT]

1. Connect the sweep generator being set to 455 kHz to antenna terminal.
2. Connect the oscilloscope to the test point 7.
3. Adjust the core of i.f.trans. Lb13 ~ 15 so that the output is the best.

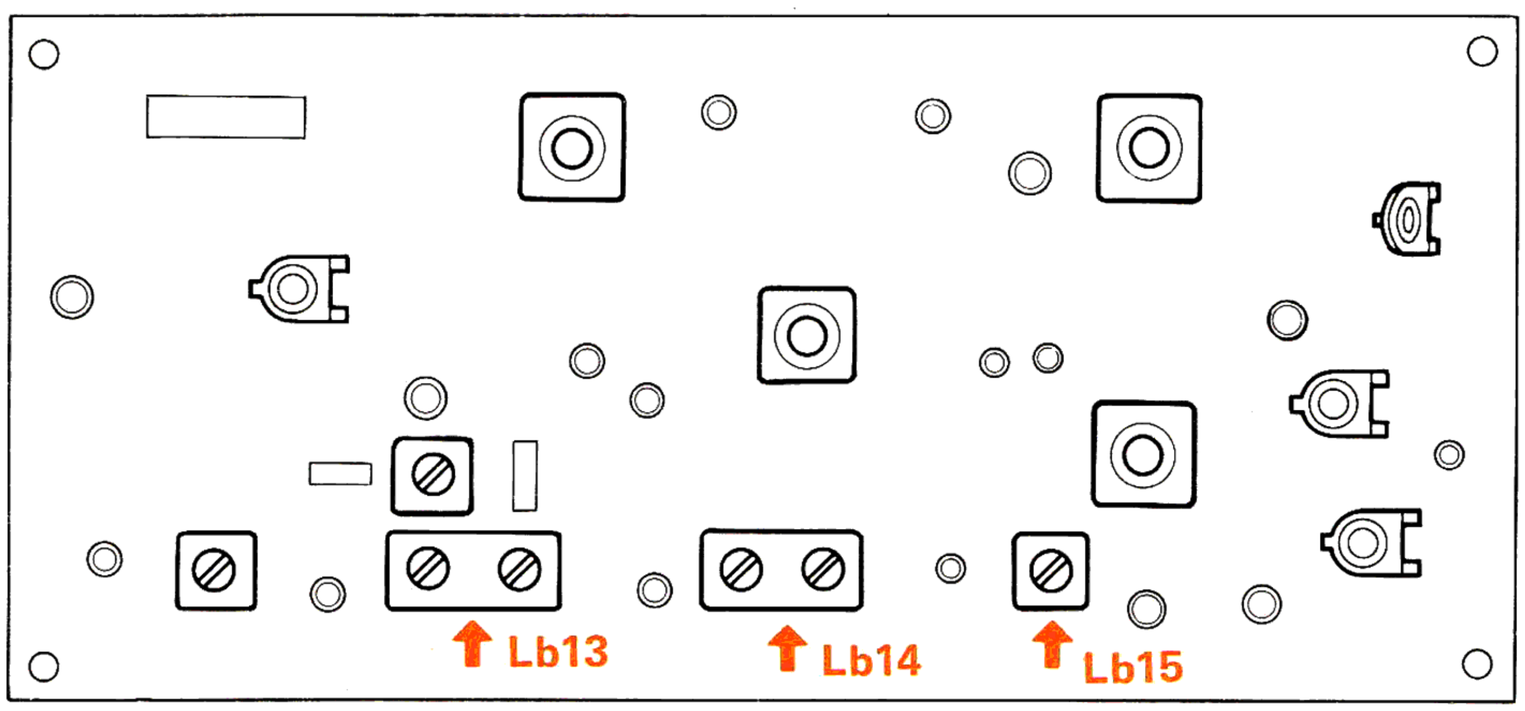

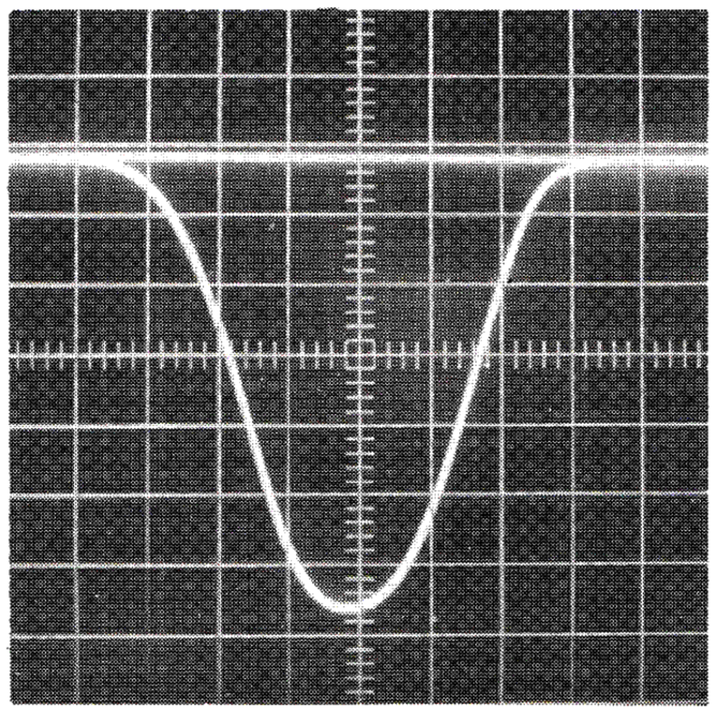

▲ Waveform of test point 7

[ADJUSTING TRACKING]

1. Connect the r.f. generator being set to 600 kHz, modulation of 30% at 400 Hz to antenna terminal.
2. Connect the VTVM to the REC jack.
3. Meet the dial pointer to the 600 kHz on the dial calibrations.
4. Adjust the osc-trans. Lb11, R.f.-trans Lb12, and ferrite antenna so that the output is the max.

1. Connect the r.f. generator being set to 1,400 kHz, modulation of 30% at 400 Hz to antenna terminal.
2. Connect the VTVM to the REC jack.
3. Meet the dial pointer to the 1,400 kHz on the dial calibrations.
4. Adjust the trimmer CTa6 ~ 8 so that the output is the max.

www.hifiengine.com

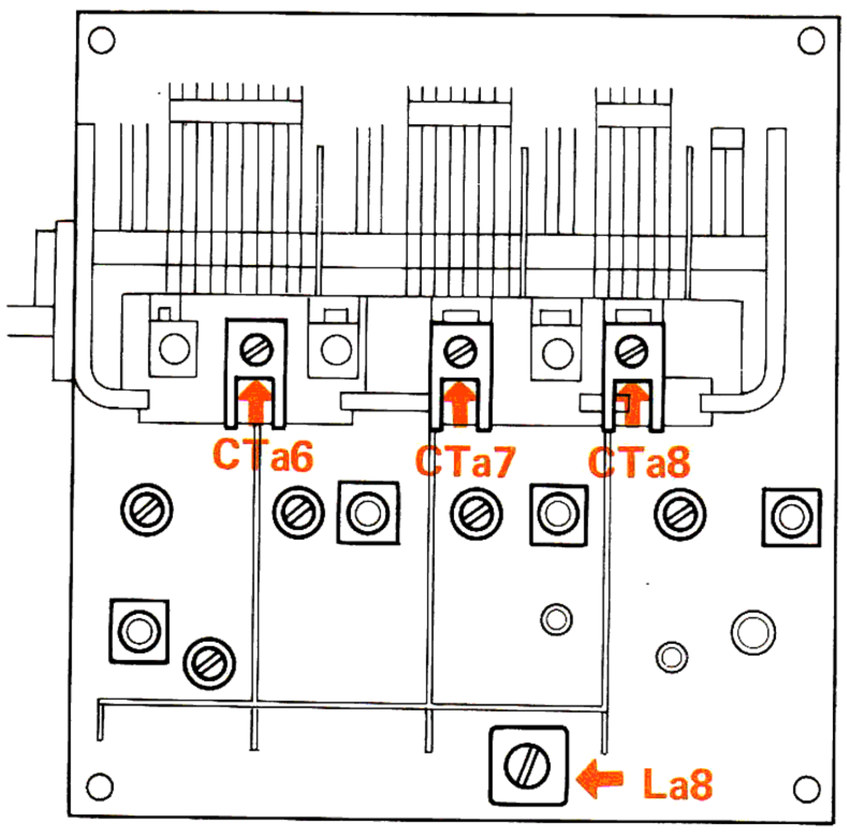

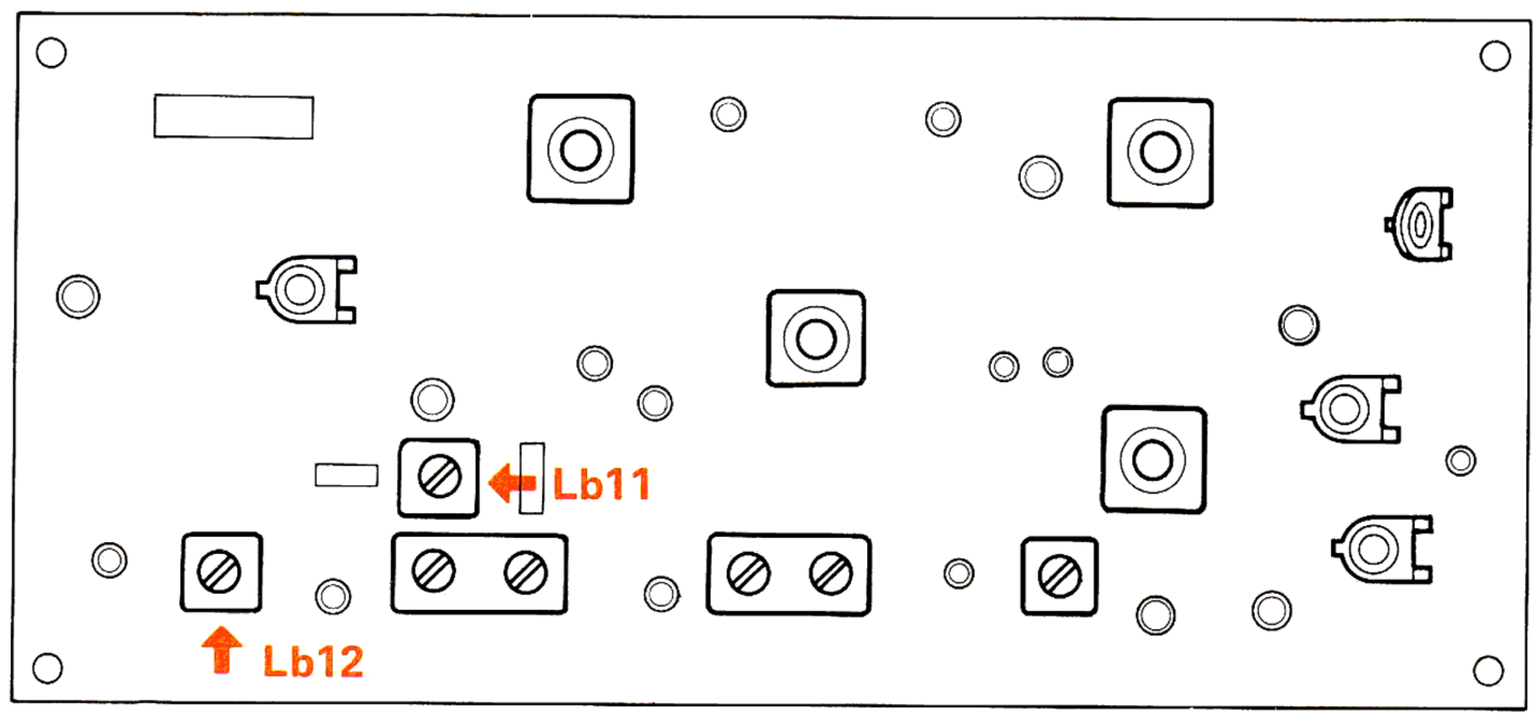

[ADJUSTING METER]

1. Connect the r.f. generator to antenna terminal.
2. Meet the dial pointer to the 1,000 kHz on the dial calibrations.
3. Adjust the potentiometer (VRb4) so that the signal meter indicates "5".

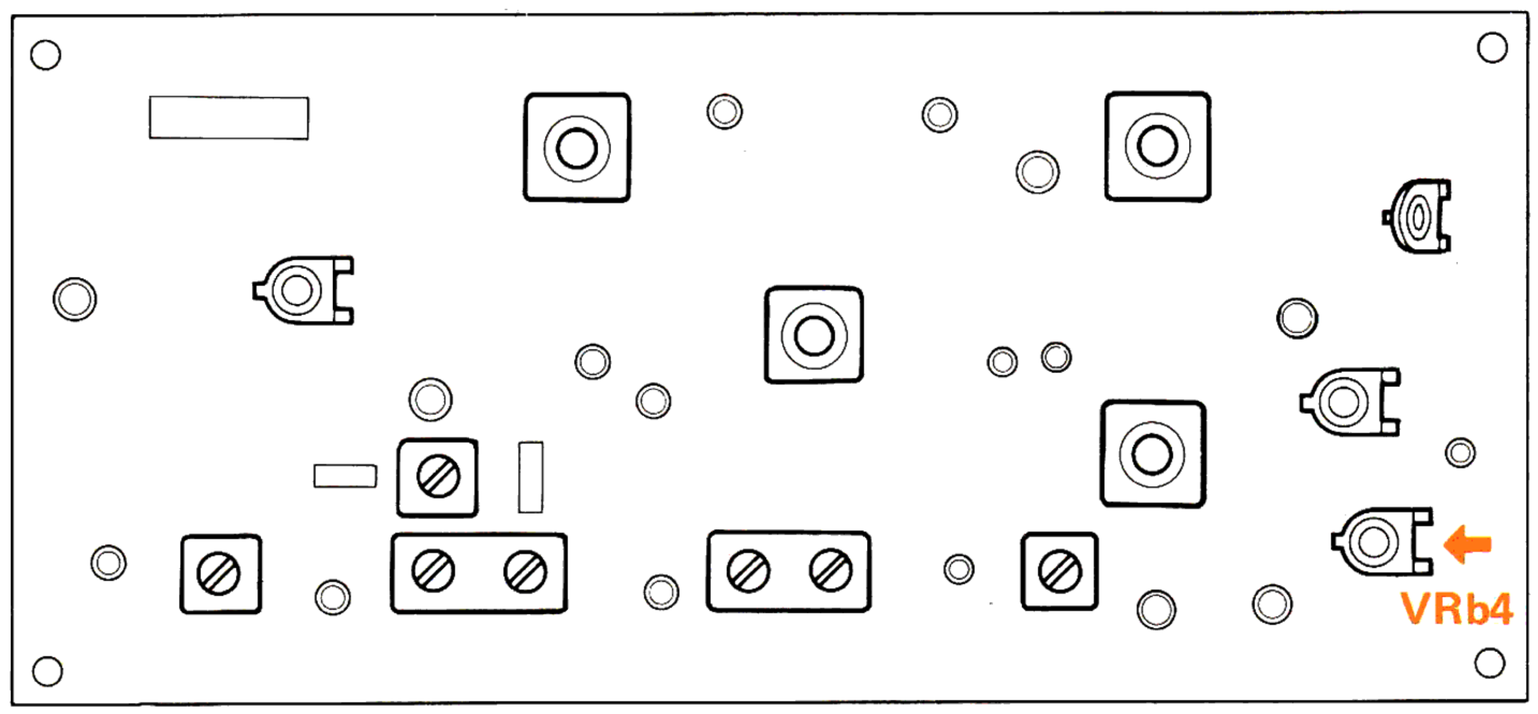

www.hifiengine.com

AUDIO ADJUSTMENT

[BIAS CURRENT]

In the case of using the voltmeter

1. Connect the voltmeter across the emitter resistor of power transistors.
2. Check the voltmeter to be 20mV.
3. If not, turn the PC trimmer potentiometer (VRe1, 2) so that the meter has rating value.

In the case of using the audio generator and oscilloscope, etc.

1. Connect the dummy load (8Ω) to speaker terminal and do the oscilloscope across the dummy.
2. Feed the signal (1 kHz) to the set.
3. Check the waveform to be the best.
4. If not, turn the PC trimmer potentiometer (VRe1, 2) so that the waveform is distortionless.
5. Check the voltmeter to be 20mV.

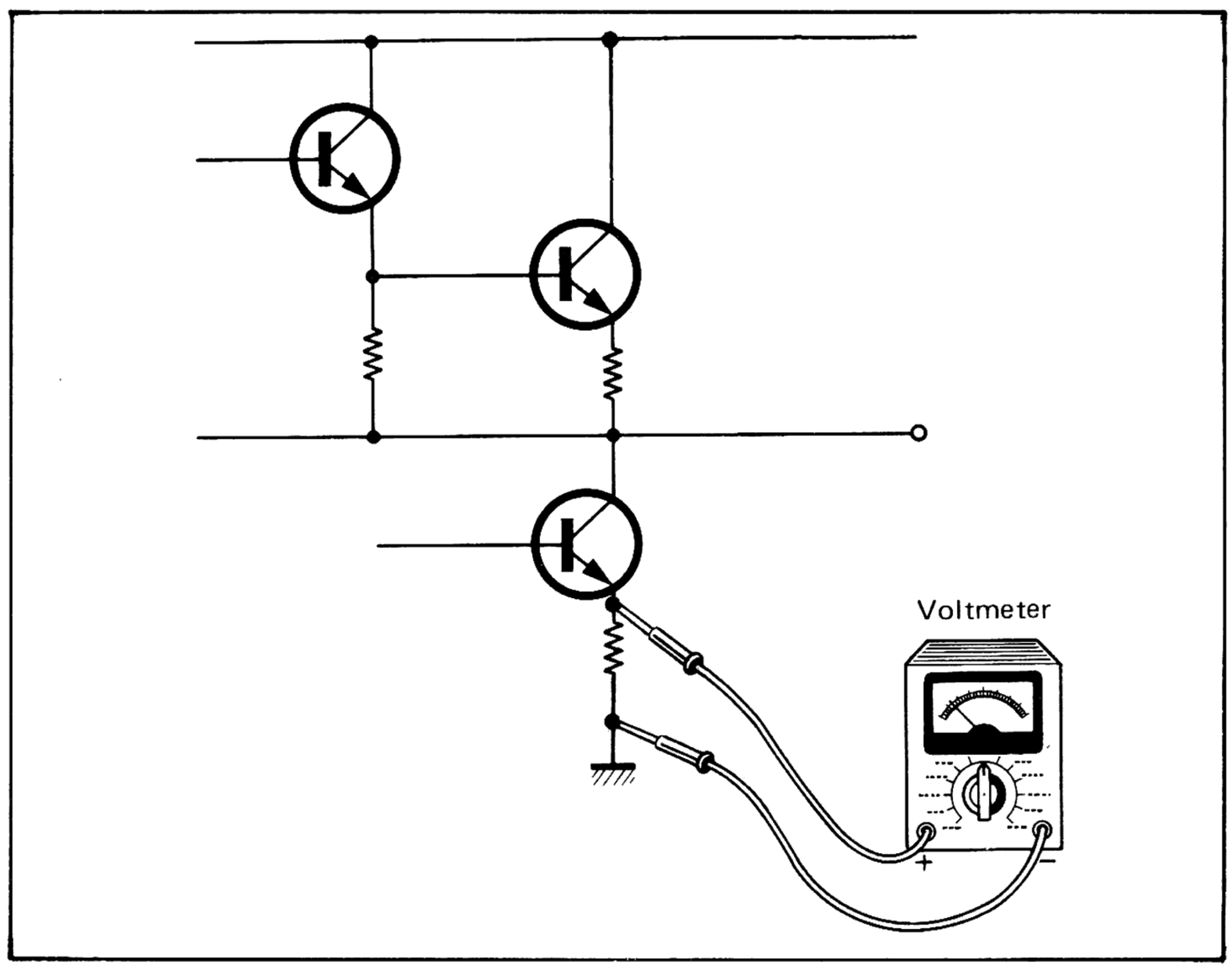

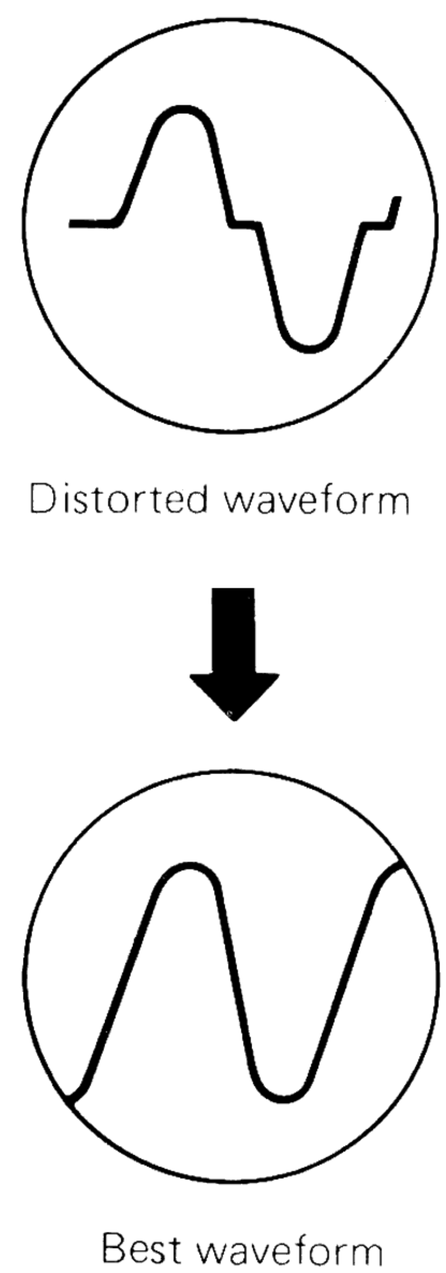

www.hifiengine.com

HOW TO REPLACE POWER TRANSISTOR

[REPLACING POWER TRANSISTOR]

1. Remove screws (not tapping screw).
2. Replace the power transistor with new.
   At this time, don't forget to spread silicone grease on faces of mylar.
3. Fix the power transistor with screw on the heat sink.
4. Check the transistor is not in contact with the heat sink.

Note: 1. Tapping screw holds the transistor socket. Don't remove it without necessi
2. Before fix the transistor, in the case of replacing transistor socket, do the transistor socket.

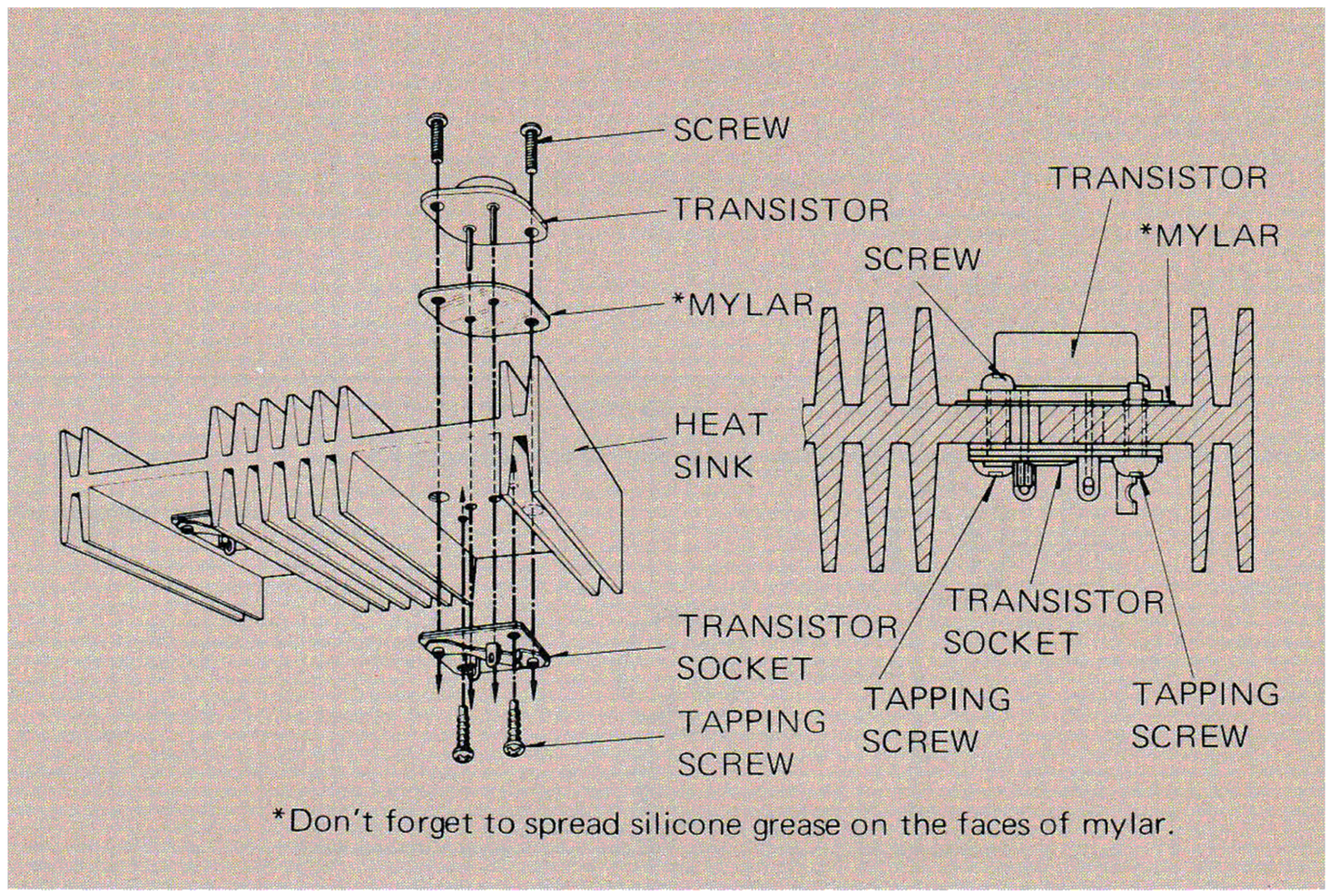

▼ DIAL CORD STRINGING

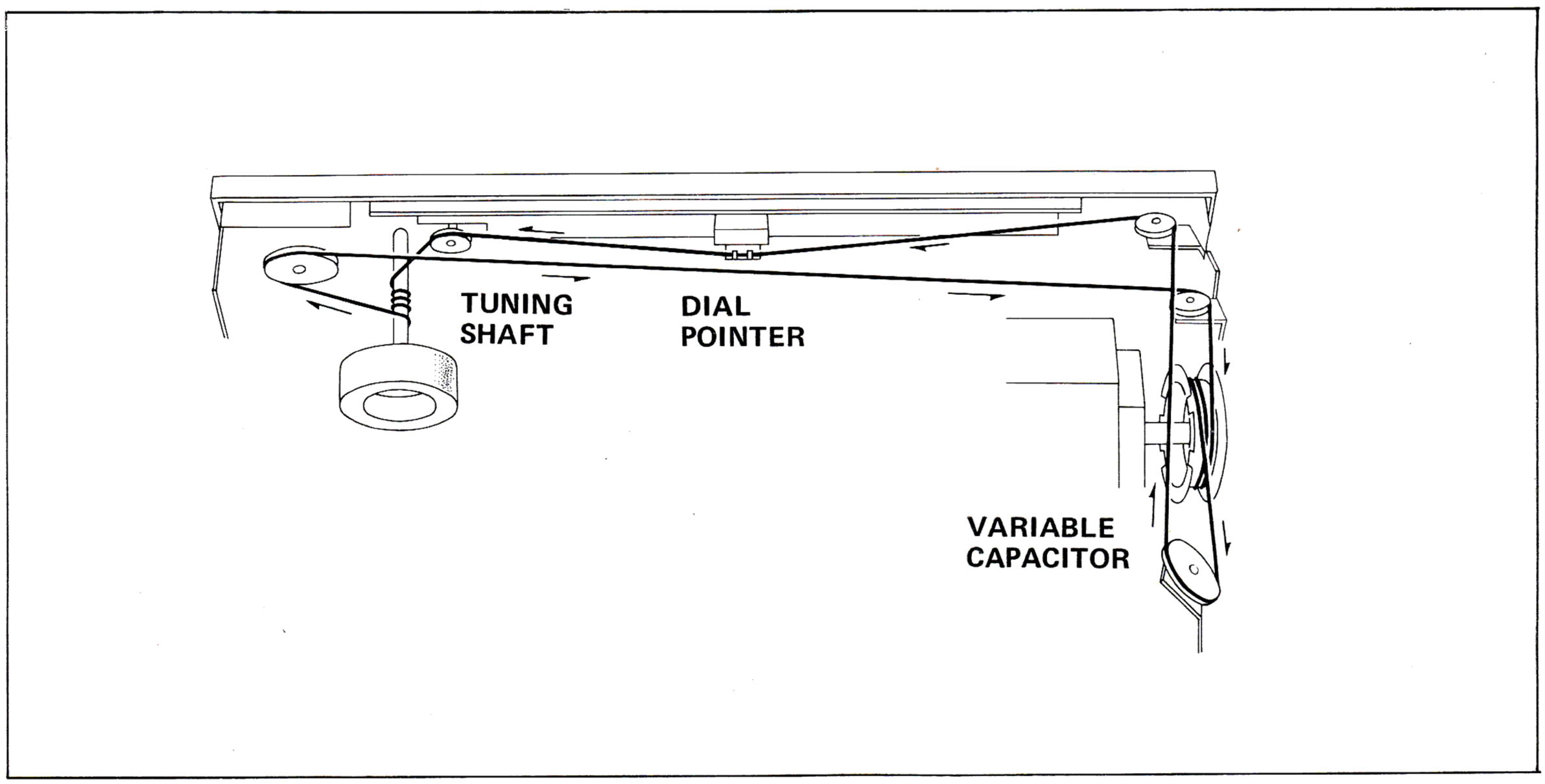

www.hifiengine.com

HOW TO REPAIR FINAL STAGE (ESPECIALLY RIGHT)

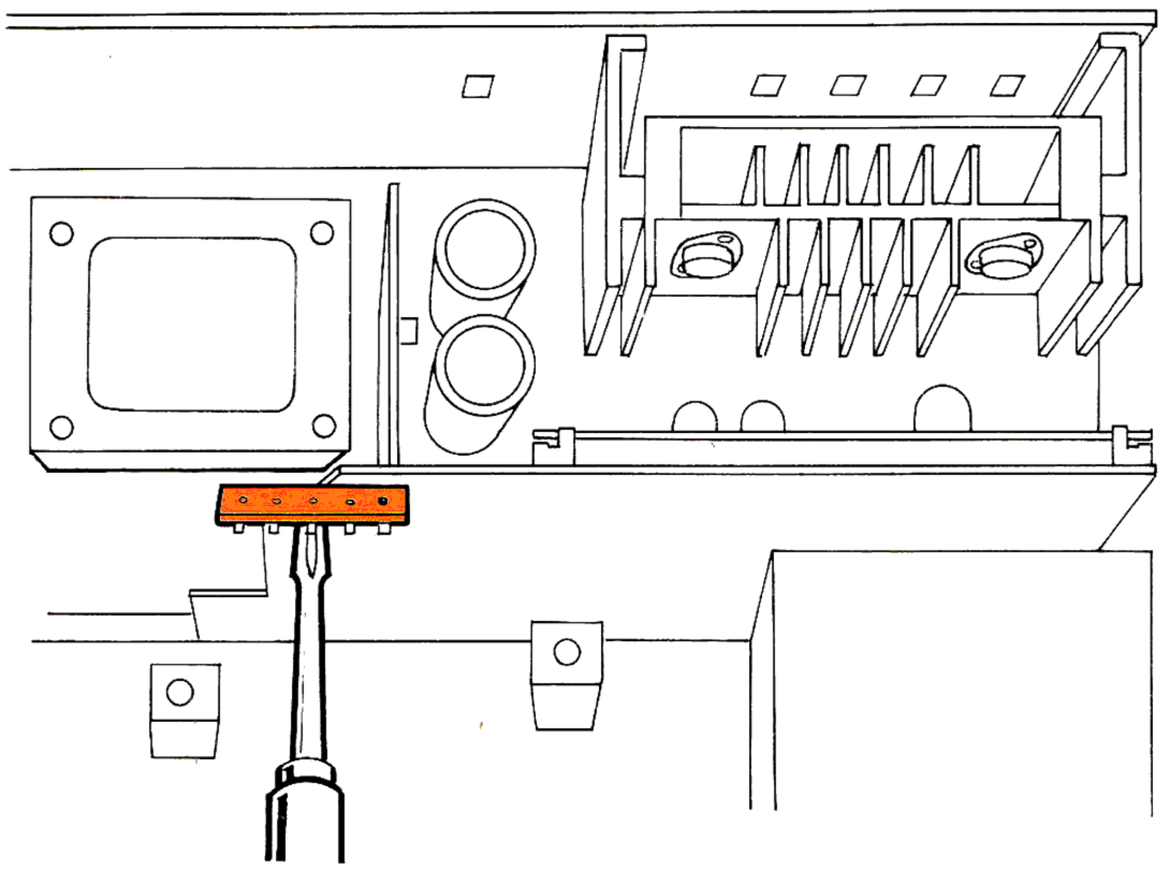

▲ Remove the lug connecting dial pointer.

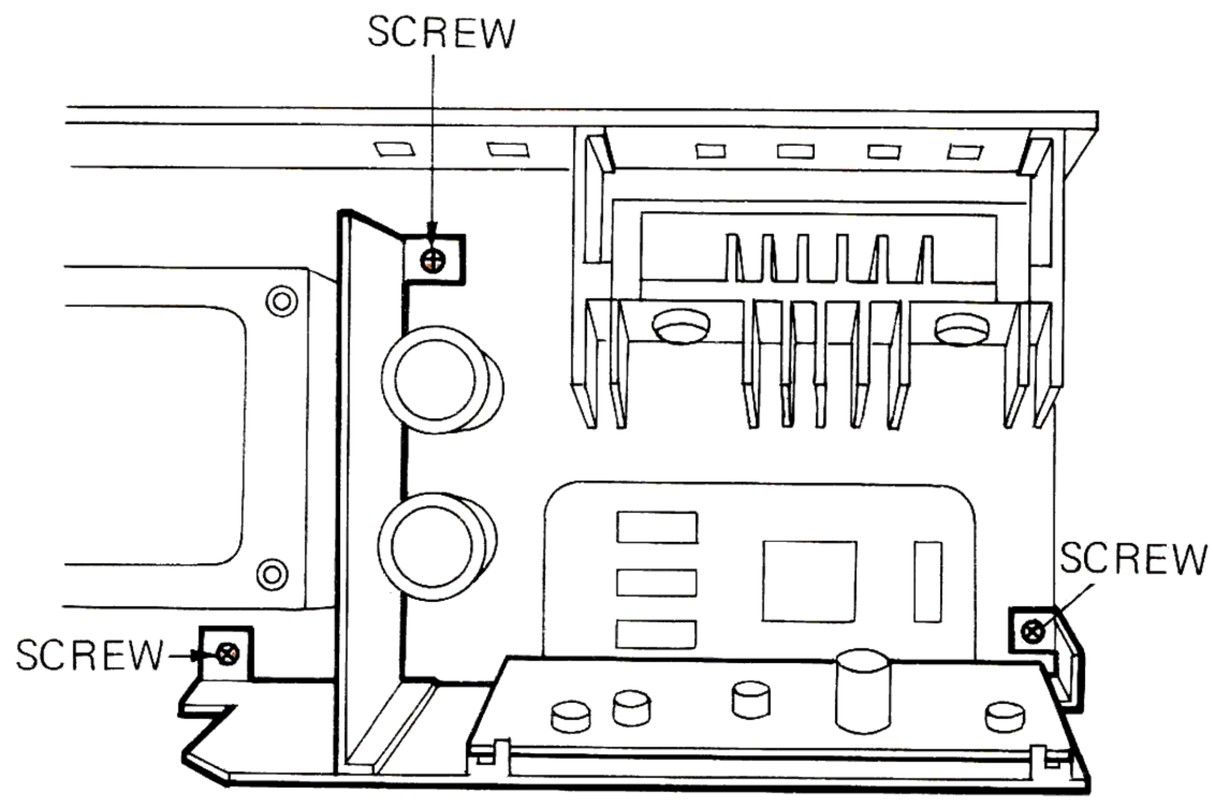

▲ Remove the shield plate.

1 → 2
↓
4 ← 3

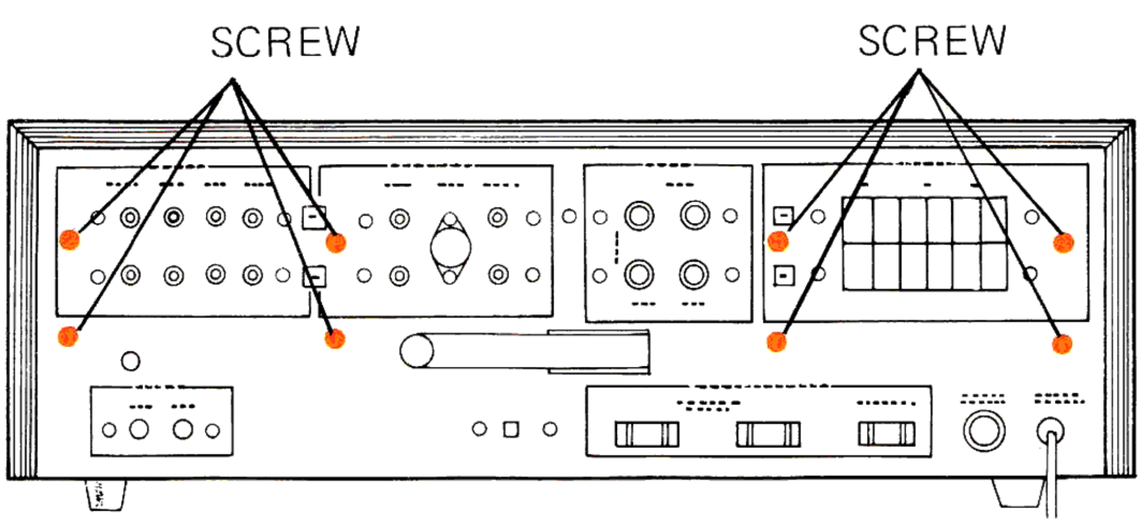

▲ If you want to remove a heat sink, unscrew screws on rear panel.

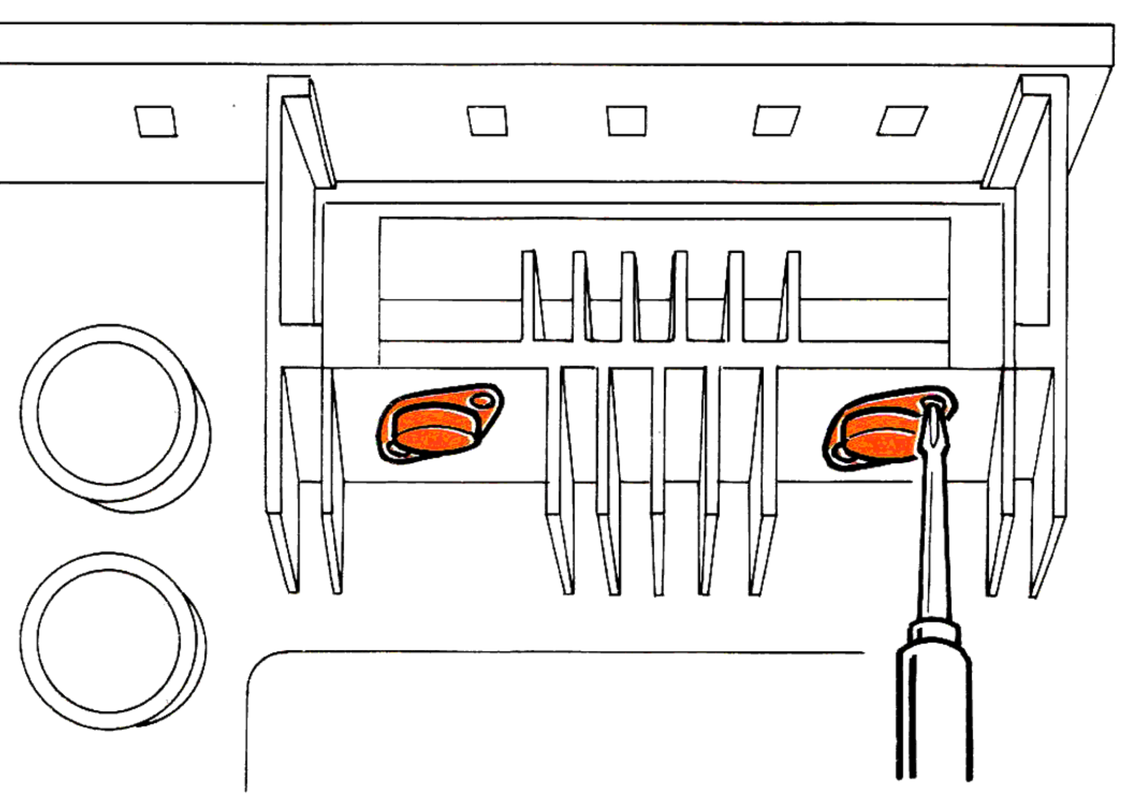

▲ Adjust power transistors.

www.hifiengine.com

HOW TO REPLACE PUSHBUTTON PC BOARD

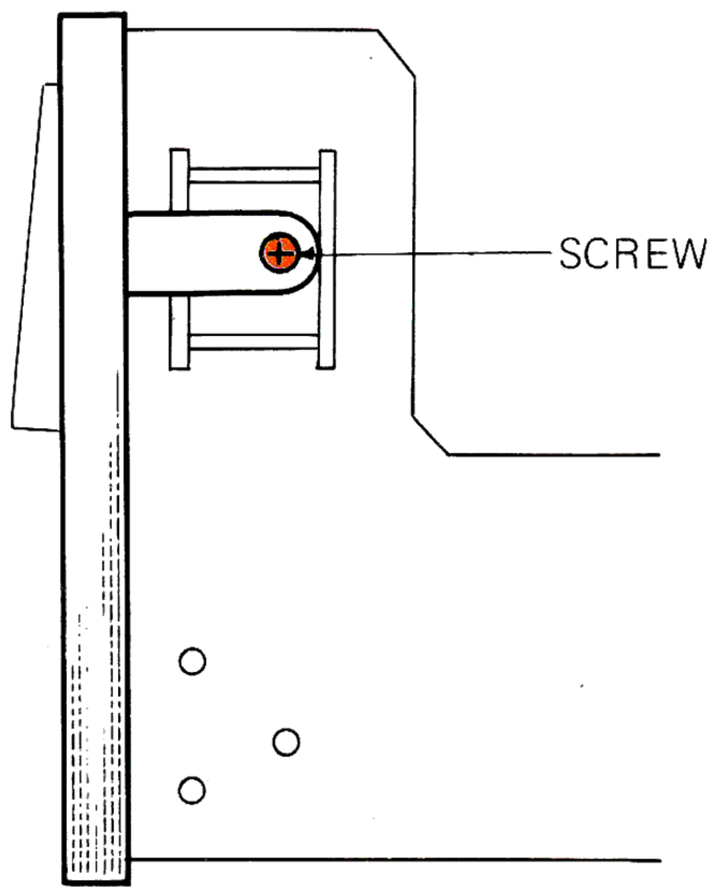

▲ Remove the case and the screw setting right side of front panel — front panel fixed by nuts of potentiometer and rotary switches.

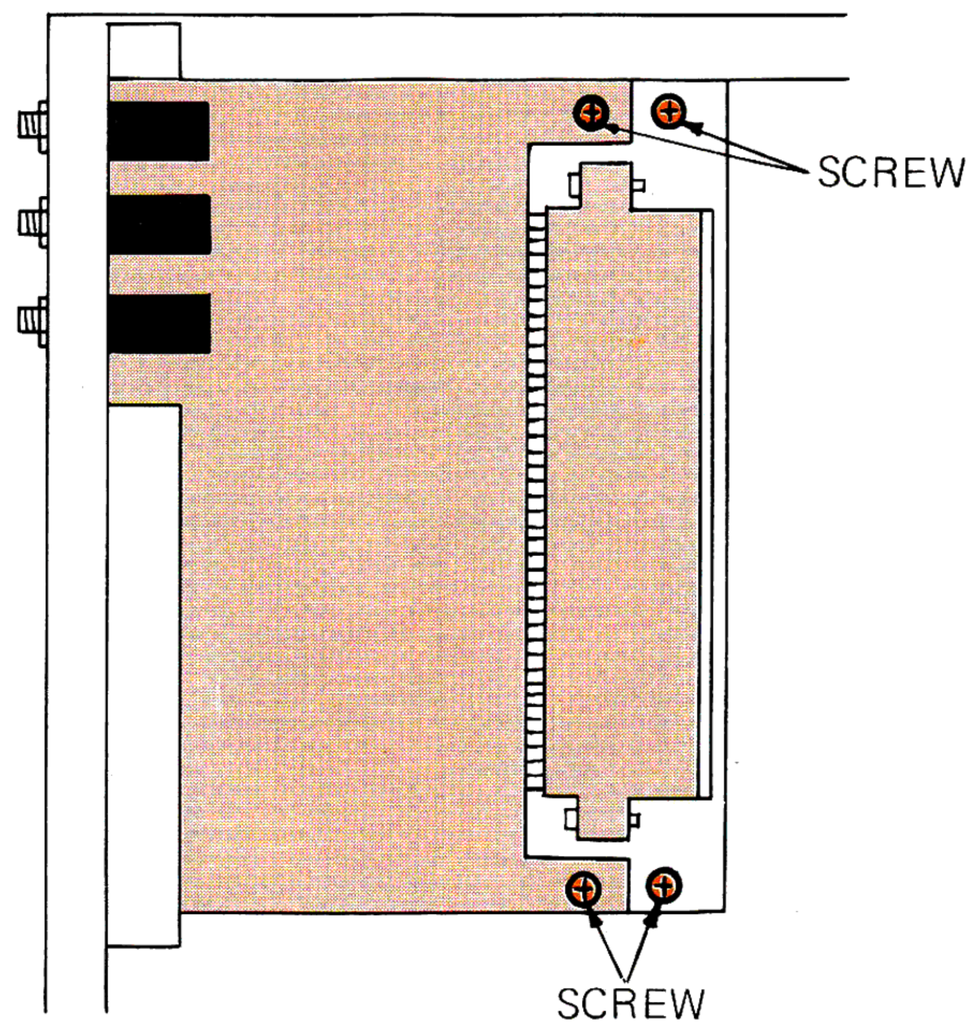

▲ Remove screws fixing pc board and pc board connector.

1 → 2
↓
4 ← 3

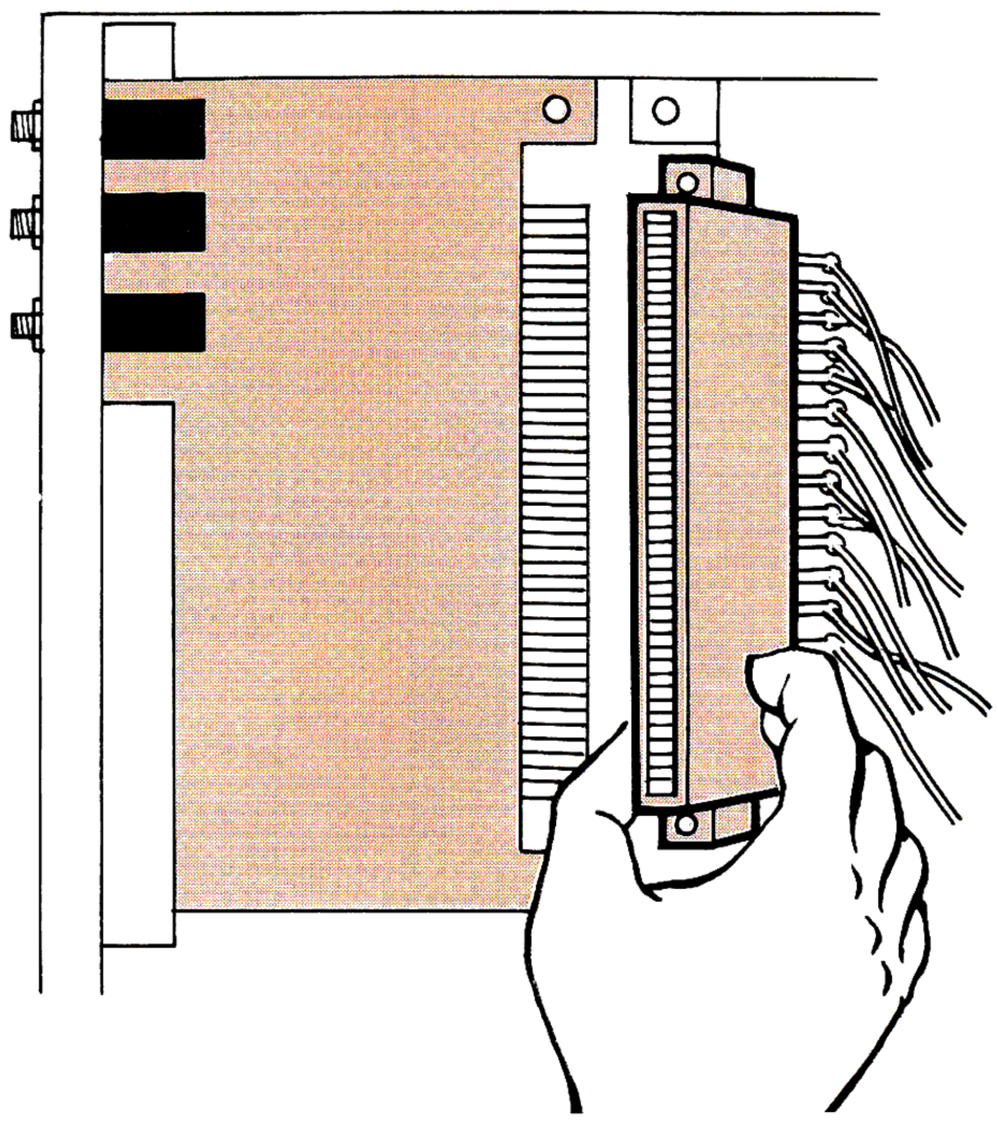

▲ First pull out the pc board from connector and next do out pc board.

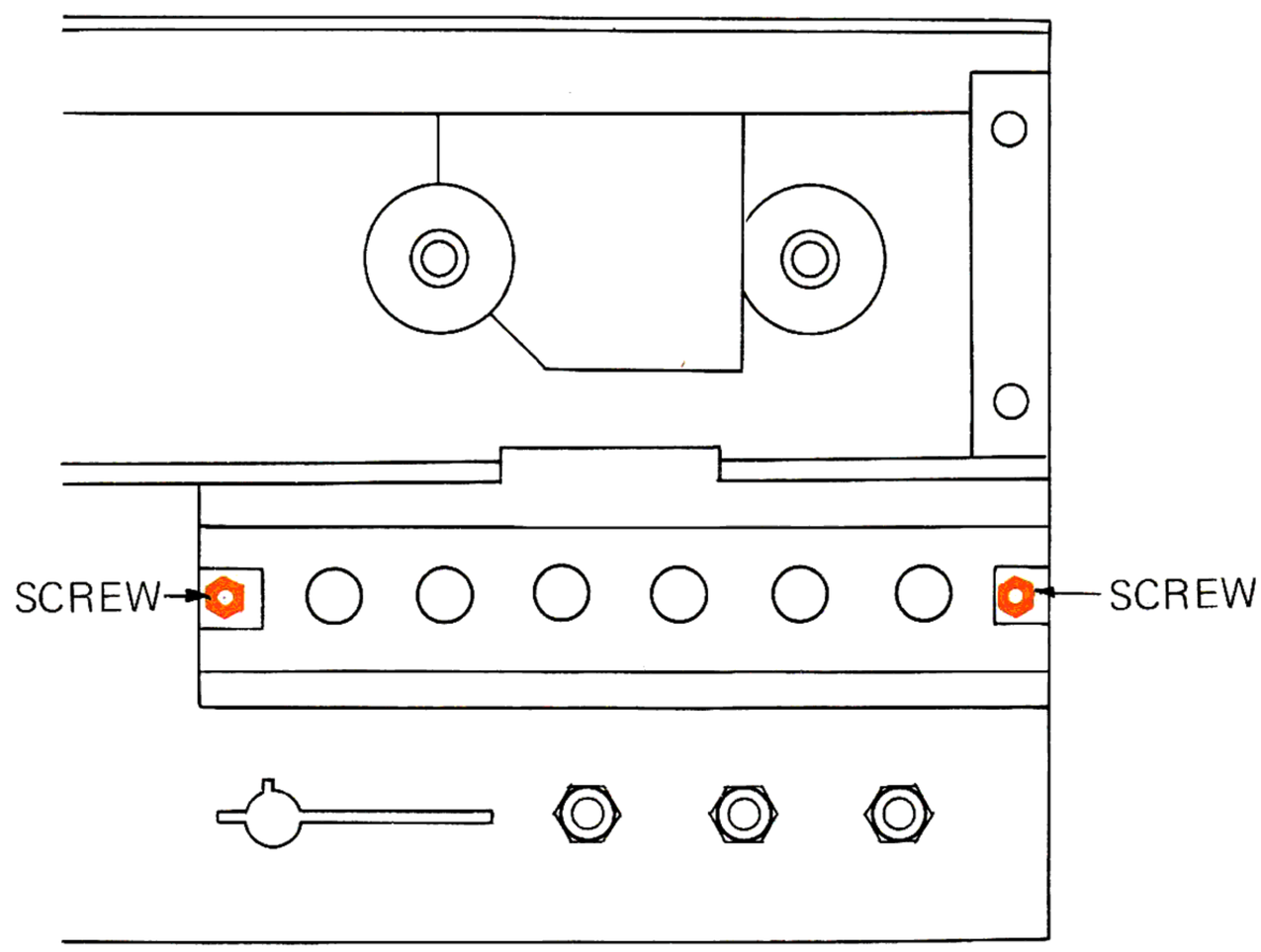

▲ Remove screws fixing pc board on front chassis.

www.hifiengine.com

HOW TO MOUNT THE SET

DIRECTIONS FOR PANEL MOUNTING

1. Remove the walnut cabinet.
2. Locate the supporting shelf at the height you wish the receiver positioned.
3. Remove the four bottom legs.
4. An air space must be made between the bottom of the set and the supporting shelf to assure good ventilation and cool operation. This space can be made by placing two boards which measure 9/16" thick by 1" to 2" width between chassis and the supporting shelf.
5. Make panel cutout in the size shown below 4-7/8" x 16-5/16". The bottom of the cutout should be flush with the bottom plate of the receiver, as shown in the side view. The distance between the bottom of the cutout and the top of the supporting shelf is 9/16".
6. The receiver is held in place by two bolts. The holes must be made in the shelf to correspond with the holes in the receiver. Use the "Top View" to locate these holes on the supporting shelf. The holes should be made 1/4" in diameter or somewhat larger.

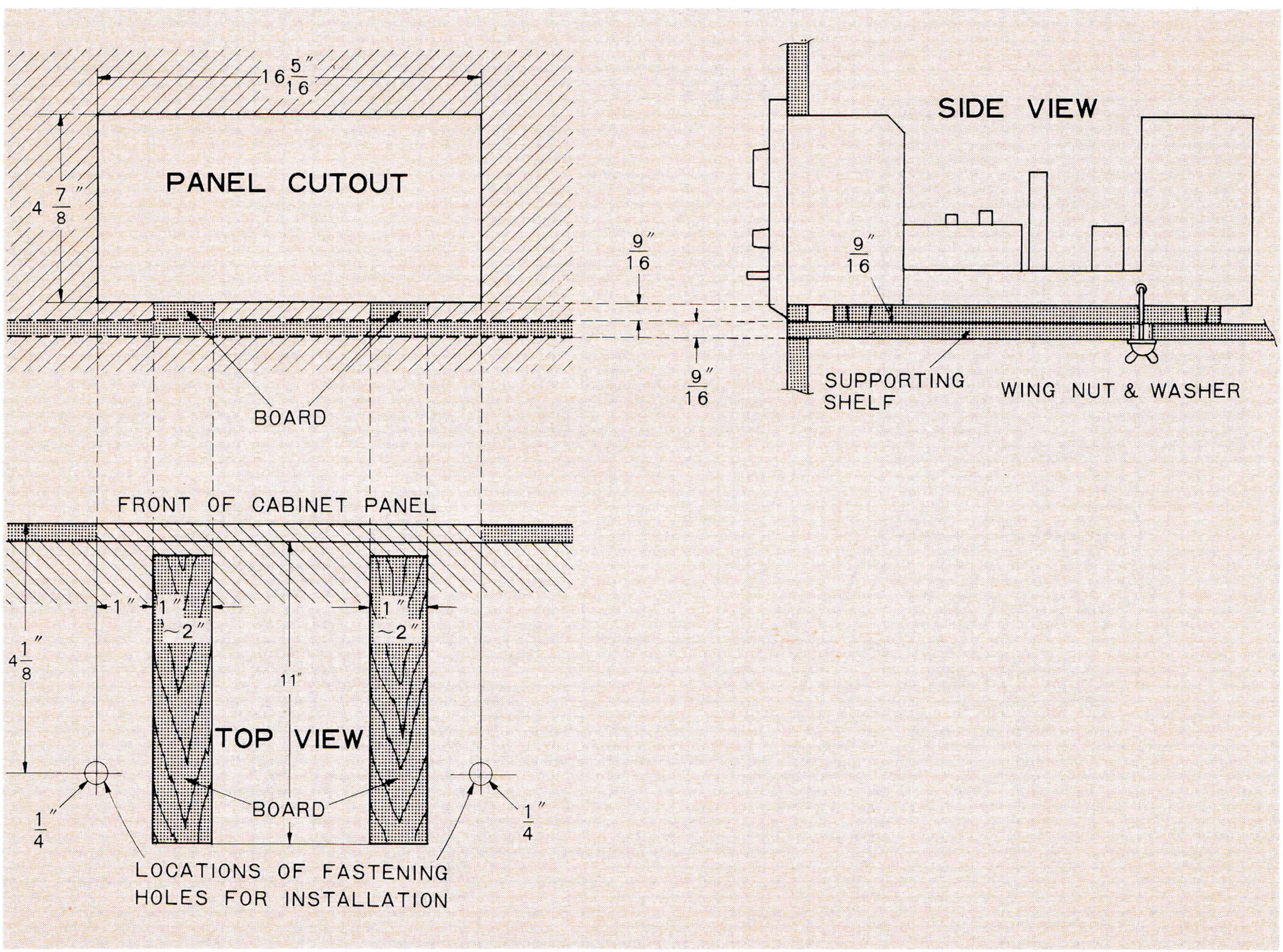

HOW TO UNDERSTAND THE ROTARY SWITCH

- See Fig. 1, for an example.
- S1 means one of rotary switches, number 1 SELECTOR switch.
- Namely, 2 means the 2nd wafer, and 3 means the 3rd wafer. Others are like so. (Fig. 2)
- The numbering of contact points are as shown in Fig. 3.

▼ **Fig. 1**

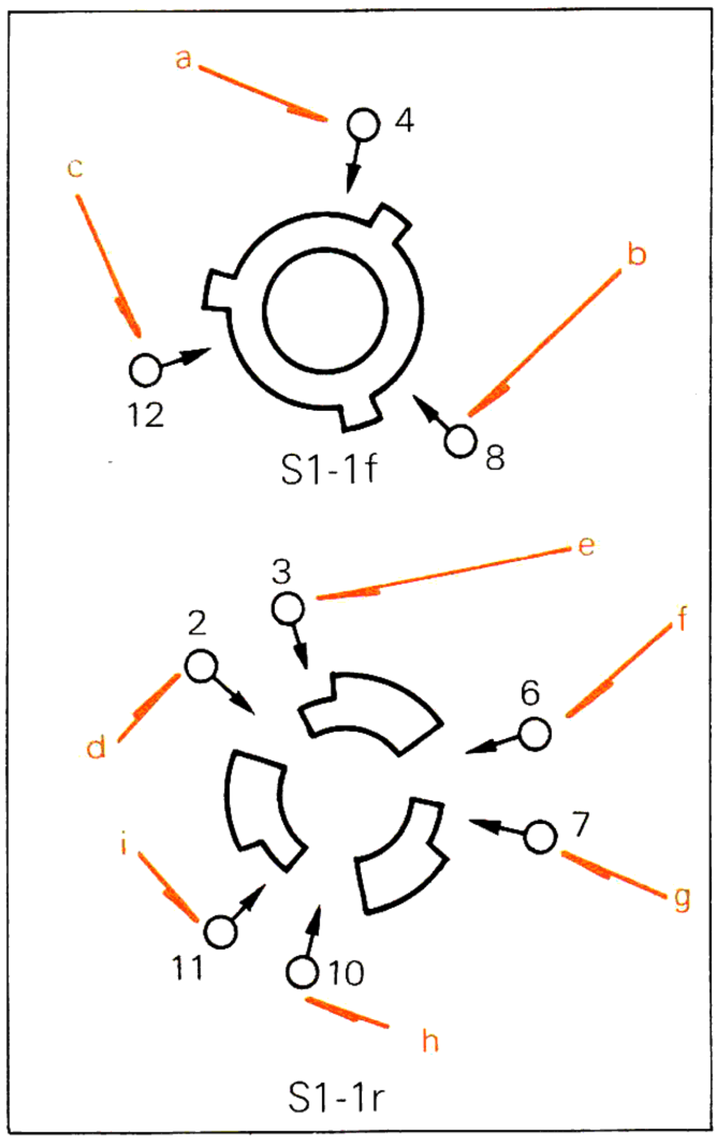

◎ means connection of the same contact point of rear and front wafer.

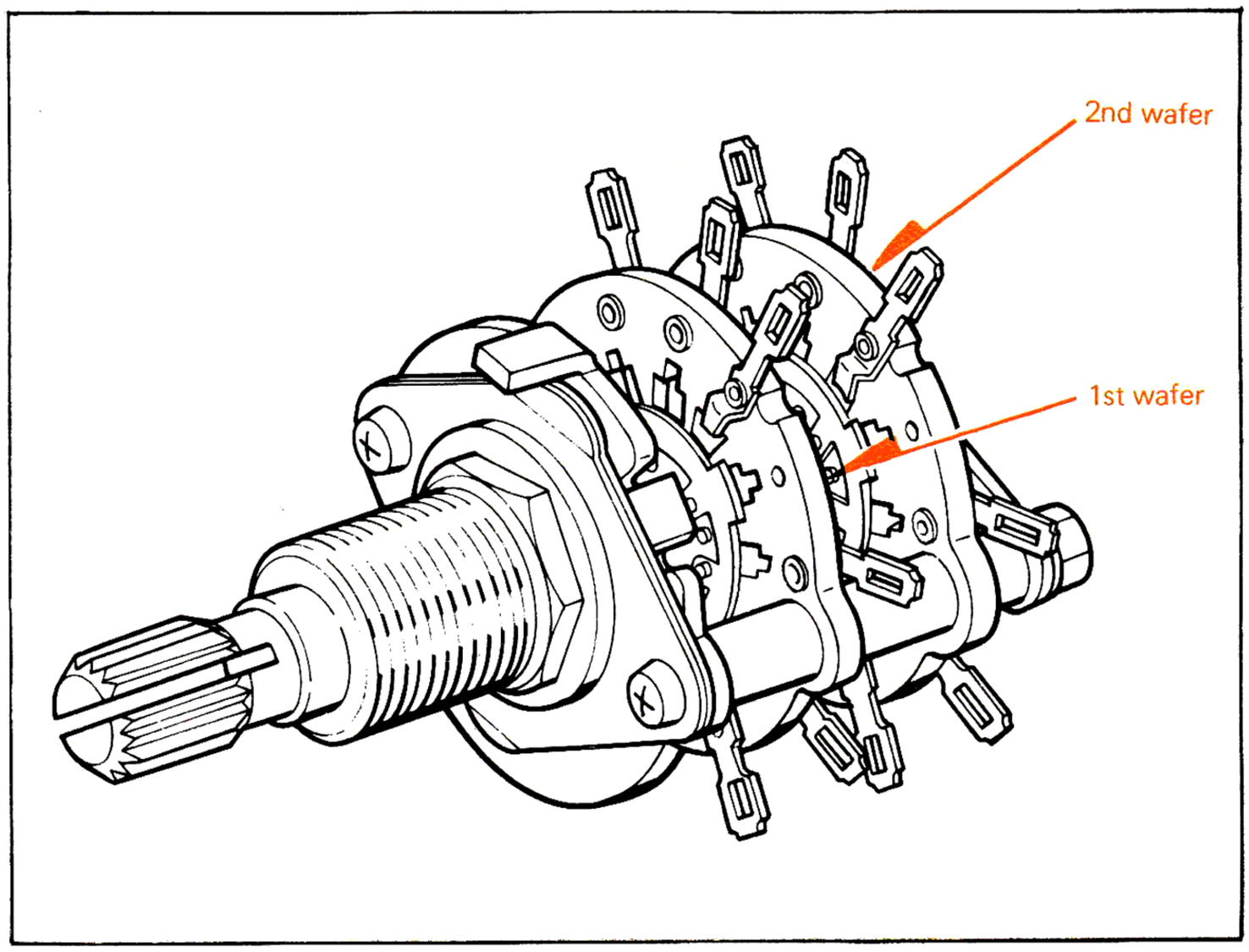

▲ **Fig. 2**

▼ **Fig. 3**

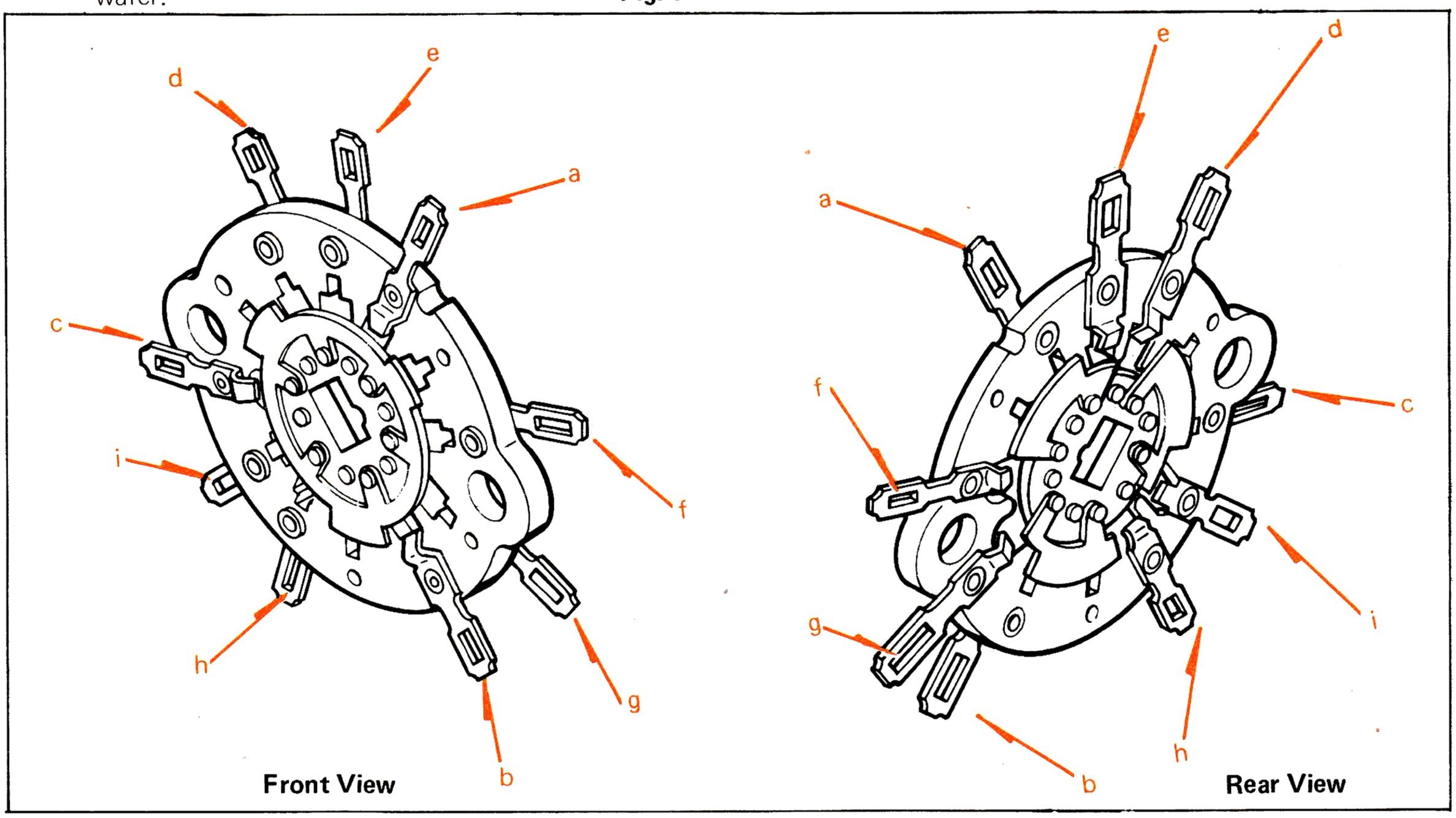

www.hifiengine.com

TABLE OF TRANSISTOR ABSOLUTE MAX. RATINGS

Transistor's name	V_{CBO}	V_{CEO}	V_{EBO}	I_C	I_E	P_C	T_J	h_{FE}	Type
2SA620WL	−60V	−50V	−5V	−50mA	50mA	200mW	125°C	90～500	Si
2SA653	−150V	−120V	−6V	−A	−	15W	150°C	30～200	Si
2SA673A	−55V	−55V	−4V	−0.5A	0.5A	0.4W	125°C	60～200	Si
2SA733	−50V	−40V	−5V	−100mA	−	250mW	125°C	90～270	Si
2SC381	40V	30V	4V	20mA	−20mA	100mW	125°C	40～80	Si
2SC458	30V	30V	5V	100mA	−	200mW	125°C	60～500	Si
2SC785R	40V	30V	4V	20mA	−20mA	100mW	125°C	40～80	Si
2SC941	35V	30V	4V	20mA	−20mA	200mW	125°C	40～140	Si
2SC945	50V	40V	5V	100mA	−	250mW	125°C	90～270	Si
2SC983	250V	150V	5V	50mA	−50mA	600mW	150°C	70～240	Si
2SC1161	200V	120V	6V	1A	−	15W	150°C	30～200	Si
2SC1213A	55V	55V	4V	500mA	−500mA	400mW	125°C	60～200	Si
2SC1345	55V	50V	5V	100mA	−100mA	200mW	125°C	400～1200	Si
2SC1416	55V	50V	5V	50mA	−50mA	200mW	150°C	200～700	Si
2SD220	80V	50V	7V	1A	−1A	500mW	−	70～400	Si

V_{CBO}	: Collector to base voltage	I_E	: Emitter current
V_{CEO}	: Collector to emitter voltage	P_C	: Maximum power disposition
V_{EBO}	: Emitter to base voltage	T_J	: Operating junction temperature
I_C	: Collector current	Si	: Silicon transistor

www.hifiengine.com

EXTERNAL VIEW

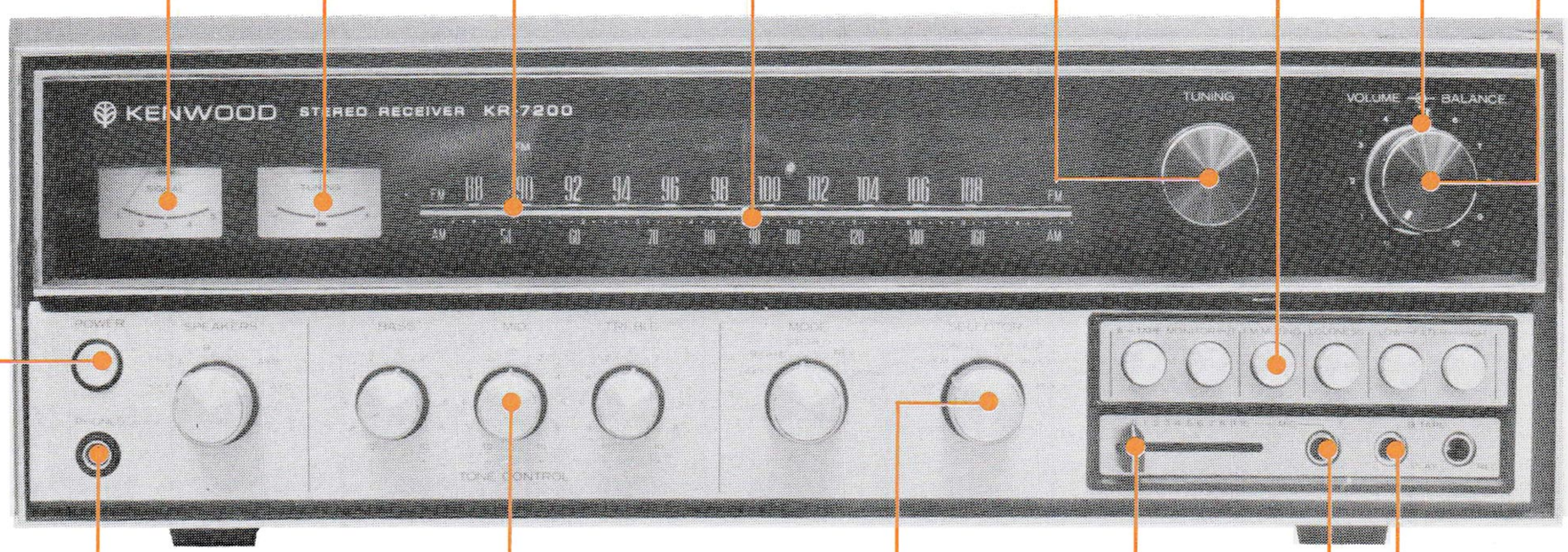

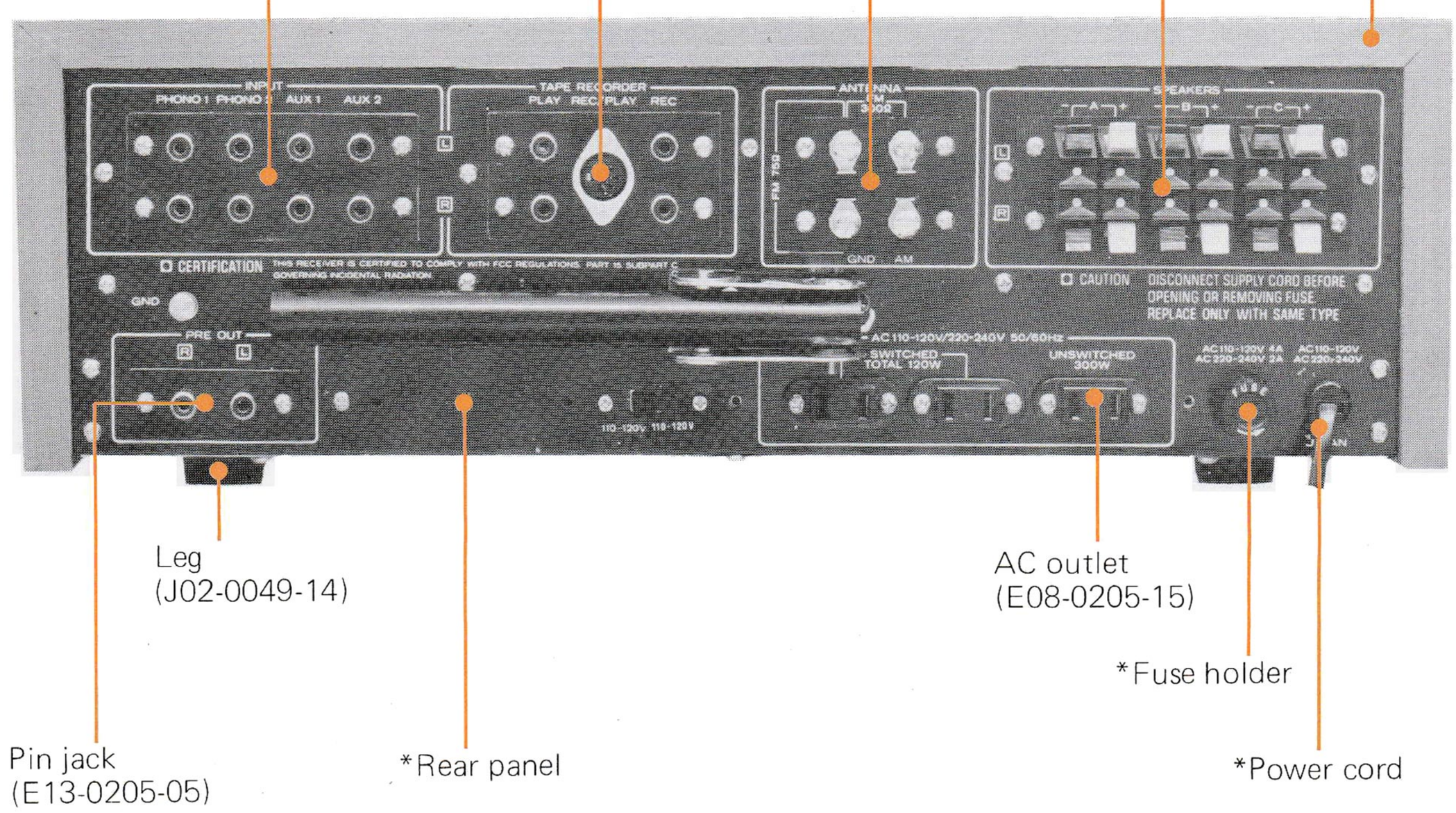

*See the parts list.

TOP & BOTTOM CHASSIS VIEW

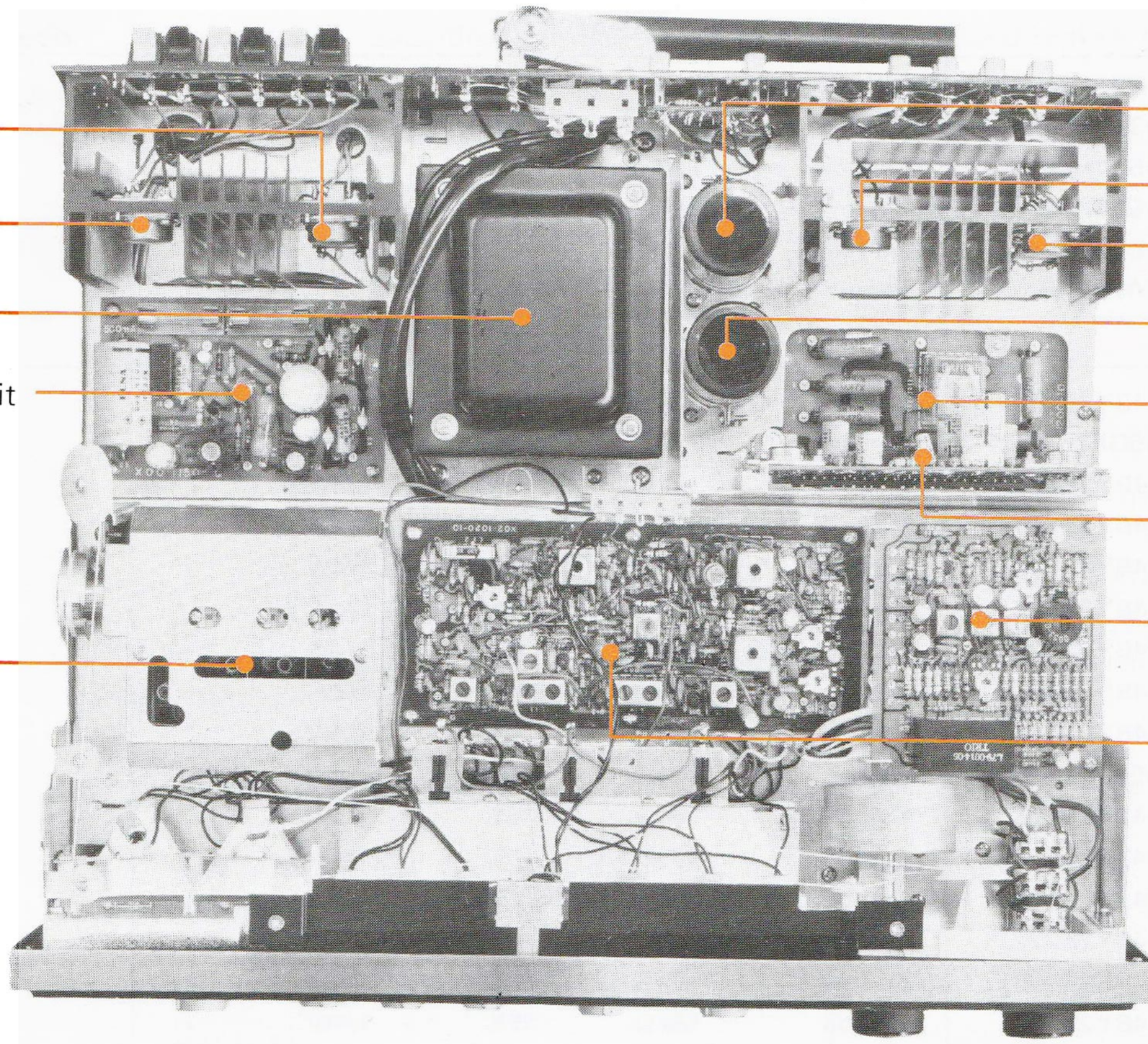

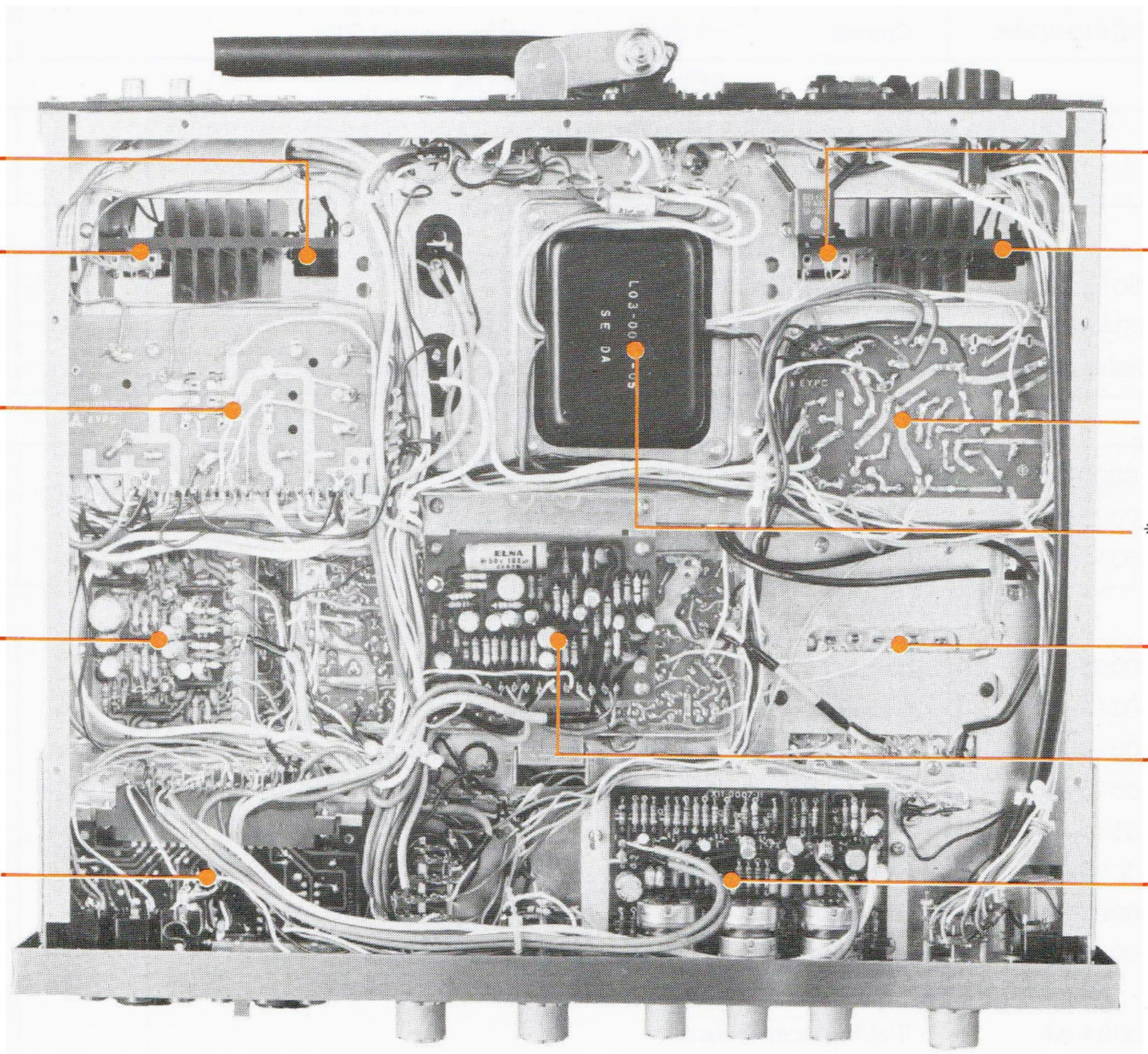

PARTS LIST

Ref. No.	Parts No.	Description				Remarks
CAPACITOR						
C100	CE04W0F221	Electrolytic	220μF	3.15WV		
C101	CQ93M1H224M	Mylar	0.22μF	±20%		
C120	CK45D1H561M	Ceramic	560pF	±20%		
C220	CK45D1H561M	Ceramic	560pF	±20%		
C300	C90-0029-05	Oil filled	0.01μF	+100%	–0%	UL, CSA
C301, 302	C90-0129-05	Electrolytic	6800μF	50WV		
RESISTOR						
R100	PD14BY2E152J	Carbon	1.5kΩ	±5%	1/4W	
R101	RC05GF2H270K	Carbon	27Ω	±10%	1/2W	
R110	PD14BY2E103J	Carbon	10kΩ	±5%	1/4W	
R120	PD14BY2E394J	Carbon	390kΩ	±5%	1/4W	
R121	PD14BY2E104J	Carbon	100kΩ	±5%	1/4W	
R122	PD14BY2E222J	Carbon	2.2kΩ	±5%	1/4W	
R123	PD14BY2E103J	Carbon	10kΩ	±5%	1/4W	
R124	PD14BY2E183J	Carbon	18kΩ	±5%	1/4W	
R125	PD14BY2E333J	Carbon	33kΩ	±5%	1/4W	
R170	RC05GF2H561K	Carbon	560Ω	±10%	1/2W	
R210	PD14BY2E103J	Carbon	10kΩ	±5%	1/4W	
R220	PD14BY2E394J	Carbon	390kΩ	±5%	1/4W	
R221	PD14BY2E104J	Carbon	100kΩ	±5%	1/4W	
R222	PD14BY2E222J	Carbon	2.2kΩ	±5%	1/4W	
R223	PD14BY2E103J	Carbon	10kΩ	±5%	1/4W	
R224	PD14BY2E183J	Carbon	18kΩ	±5%	1/4W	
R225	PD14BY2E333J	Carbon	33kΩ	±5%	1/4W	
R270	RC05GF2H561K	Carbon	560Ω	±10%	1/2W	
R300	RC05GF2H225K	Carbon	2.2MΩ	±10%	1/2W	
SEMICONDUCTOR						
Q1 ~ 4		2SD287				
D1, 2		STV-3				
SWITCH						
S1	S04-5013-15	Rotary (SELECTOR)				
S2	S04-2043-05	Rotary (MODE)				
S10	S04-2036-05	Rotary (SPEAKERS)				
POTENTIOMETER						
VR1	R11-9003-05	VOLUME	50kΩ (B) three gangs			
VR2	R11-9003-05	BALANCE	100kΩ (W) three gangs			
VR3	R13-5011-05	MIC	100kΩ (A) slide			
MISCELLANEOUS						
–	A03-0095-02	Cabinet				
–	A10-0313-11	Chassis				
–	A15-0017-13	Frame assembly				
–	A20-0518-05	Panel				
–	A20-0519-03	Panel assembly				
–	A21-0095-02	Ornamental plate				
–	A30-0066-05	Dial board				
–	A40-0097-03	Bottom plate				
–	B07-0084-04	Black spacer (power)				

www.hifiengine.com

Ref. No.	Parts No.	Description	Remarks
—	B10-0091-02	Front glass	
—	B20-0234-03	Dial calibrations	
—	B21-4010-05	Dial pointer	
PL	B30-0060-05	Pilot lamp (300mA) x 3	
PL	B30-0064-05	Pilot lamp (50mA) x 7	
PL	B30-0067-05	Meter pilot lamp (8V, 150mA) x 2	
—	B31-0137-05	Meter assembly	
—	B31-0138-05	Signal meter	
—	B31-0139-05	Tuning meter	
—	B42-0009-04	Passed sticker	
—	B42-0350-14	Name plate (A)	
—	B42-0351-14	Name plate (B)	
—	B52-0132-00	Schematic diagram	
—	D01-0009-05	Flywheel	
—	D15-0073-14	Middle size pulley x 2	
—	D15-0075-04	Small size pulley x 3	
—	D15-0104-04	Pulley	
—	D20-0092-05	Dial shaft	
—	E02-0207-05	Transistor socket x 4	
—	E08-0205-15	AC outlet x 3	UL
—	E10-2205-05	22P PC board connector	
—	E10-3601-05	36P PC board connector	
J	E11-0002-05	Phone jack (TAPE-REC, -PLAY, PHONE) x 3	
J	E11-0034-15	Phone jack (MIC)	
J	E13-0205-05	2P pin jack	
J	E13-0409-05	4P pin jack with DIN	
J	E13-0802-05	8P pin jack	
—	E15-0038-05	Pilot lamp socket x 3	
—	E20-0418-03	4P terminal strips (antenna)	
—	E21-1201-05	12P push terminal (speaker)	
—	F01-0119-03	Heat sink x 2	
—	F07-0264-14	Dial cover	
—	F10-0273-13	MAIN AMP. shield plate	
—	F10-0274-04	INPUT shield plate	
—	G01-0045-04	Dial spring	
—	H01-0802-14	Carton case	
—	J02-0049-14	Leg x 4	
—	J19-0010-04	Varistor stopper x 2	
—	J19-0029-14	Front glass stopper x 2	
—	J19-0249-04	Meter stopper	
—	J19-0250-14	Dial stopper	
—	J19-0251-14	Left side board	
—	J19-0252-34	Right side board	
—	J19-0253-03	MIC AMP. mounting hardware	
—	J19-0266-04	Upper front glass stopper	
—	J19-0267-04	Lower front glass stopper x 3	
—	J21-0192-04	Amp. stopper x 2	
—	J21-0480-13	Antenna stopper	

www.hifiengine.com

Ref. No.	Parts No.	Description	Remarks
—	J21-0971-14	Power transformer mounting hardware	
—	J21-0972-04	MPX unit mounting hardware	
—	J21-0973-14	Push button switch mounting hardware	
—	J21-0975-04	Shield plate stopper	
—	J21-0976-14	Angler	
—	J21-0977-04	Switch mounting hardware	
—	J21-0989-14	Pilot lamp mounting hardware	
—	J21-1001-04	Frame mounting hardware	
—	J21-1011-04	Panel mounting hardware	
—	J25-0768-04	DIN PC board	
—	K23-0098-04	Knob (BALANCE)	
—	K23-0117-03	Knob (TUNING)	
—	K23-0118-03	Knob (VOLUME)	
—	K23-0119-03	Knob (SPEAKERS, MODE, SELECTOR)	
—	K23-0120-03	Knob (TONE) x 3	
—	K29-0113-24	Knob (MIC)	
—	K29-0114-04	Knob (push button) x 6	
—	K29-0115-04	Knob (POWER)	
T1	L19-0009-05	Balun transformer	
L1	L33-0025-05	Choke coil (1μH)	
—	T90-0002-05	FM indoor antenna	
T2	T90-0031-05	Ferrite antenna	
—	X01-1050-10	FM-RF unit	
—	X02-1020-10	IF unit	
—	X04-1010-10	MPX unit	
—	X07-1110-10	MAIN AMP. unit	
—	X08-1010-10	MIC AMP. unit	
—	X08-1080-10	PRE AMP. unit	
—	X11-0007-11	TONE AMP. unit	
—	X13-1210-10	PUSH BUTTON unit	
—	X13-1240-10	SUB MAIN	
—	X13-1250-10	SHOCK NOISE ELIMINATION unit	
	In North America and to the following parts.		
—	A23-0283-02	Rear panel	
—	B40-0627-04	Model name plate — only Canada	
—	B40-0645-04	Model name plate — only U.S.A.	
—	B42-0359-04	UL caution sticker x 2	
—	B46-0002-00	Warranty card (light blue) — only U.S.A.	
—	B46-0021-00	Warranty card (light blue) — only Canada	
—	B50-0828-00	Instruction manual	
—	B58-0043-00	Carton case caution card	
—	E30-0046-05	Power cord	UL
F	F05-4021-05	Fuse (4A)	UL
F	F05-4022-05	Fuse (4A)	
—	H03-0135-14	Carton case	

www.hifiengine.com

Ref. No.	Parts No.	Description	Remarks
—	J13-0016-15	Fuse holder	UL
—	J20-0227-14	AC outlet mounting hardware	
PT	L03-0067-15	Power transformer — only U.S.A.	
PT	L05-0012-15	Power transformer — only Canada	
CR1	R90-0097-05	Spark killer — only U.S.A.	
S9	S39-2002-05	Push button (POWER)	UL
—	X00-1150-10	Power supply unit	
	In other area		
—	A23-0284-02	Rear panel	
—	B40-0646-04	Model name plate	
—	B46-0022-00	Warranty card (yellow)	
—	B46-0023-00	Warranty card (yellow)	
—	B50-0829-00	Instruction manual	
—	B58-0139-00	Power supply caution card	
—	B58-0144-00	Power voltage selector caution card	
—	B58-0146-00	Spare fuse caution card	
—	B59-0018-00	KENWOOD service stations' list	
—	D32-0021-04	Switch stopper	
—	E30-0034-05	Power cord	
F	F05-2023-05	Fuse (2A)	
F	F05-4022-05	Fuse (4A)	
—	J13-0033-05	Fuse holder	
PT	L03-0067-15	Power transformer	
CR1	R90-0097-05	Spark killer	
—	S31-2001-05	Slide switch (power voltage selector)	SEV
S9	S39-2003-05	Pushbutton (POWER)	
—	X00-1150-81	Power supply unit	

www.hifiengine.com

SCHEMATIC DIAGRAM (1)

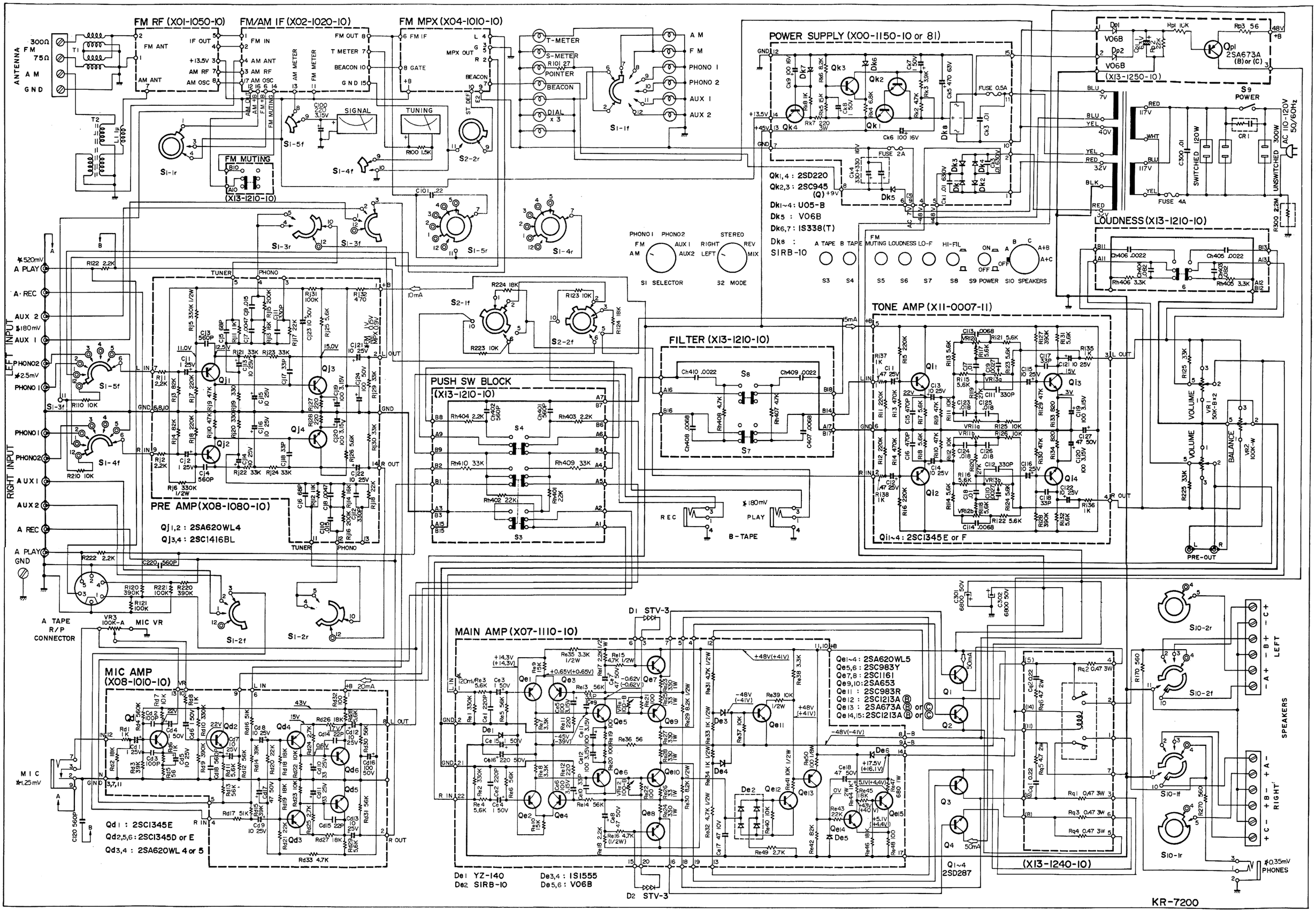

SCHEMATIC DIAGRAM (2)

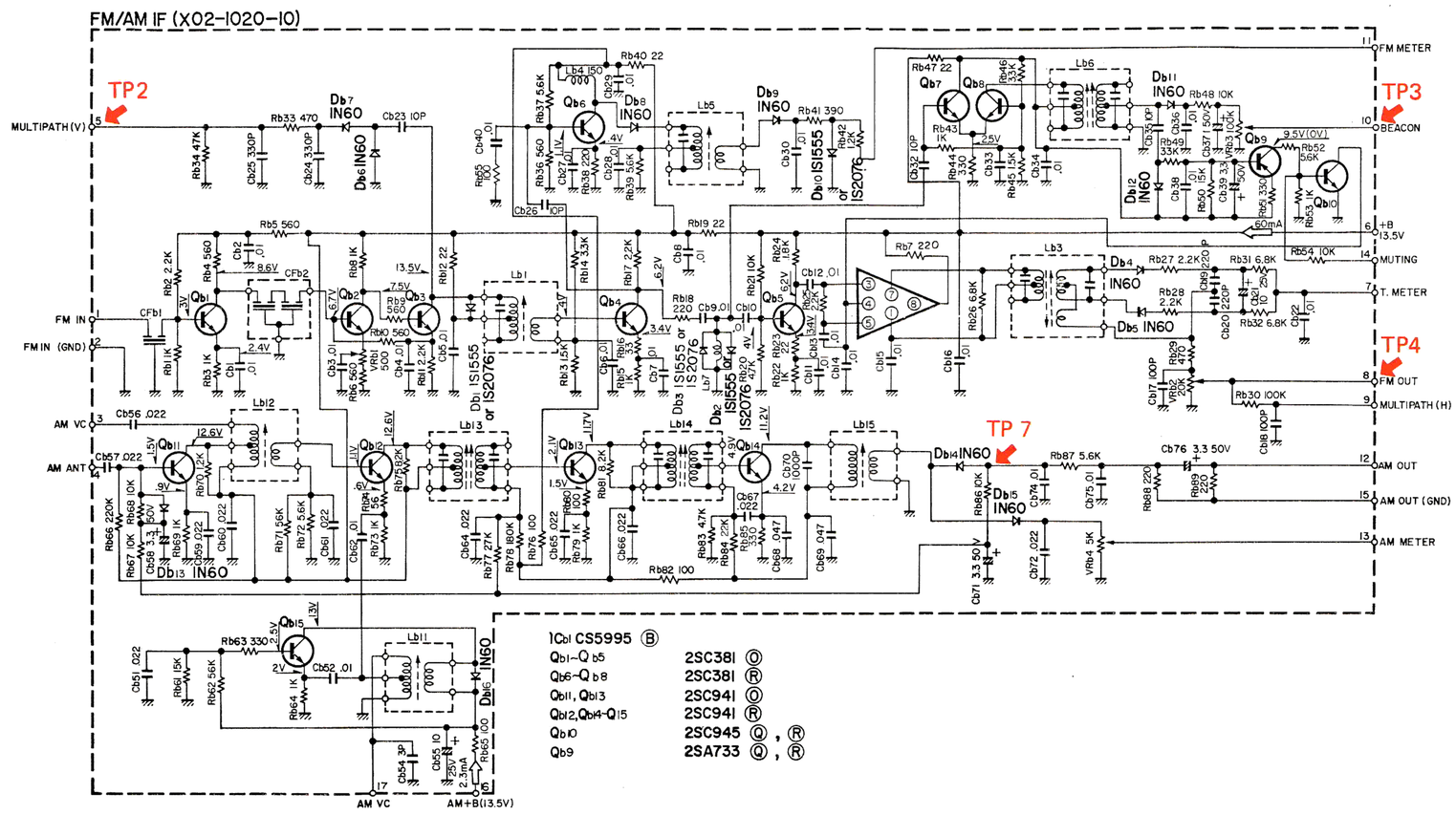

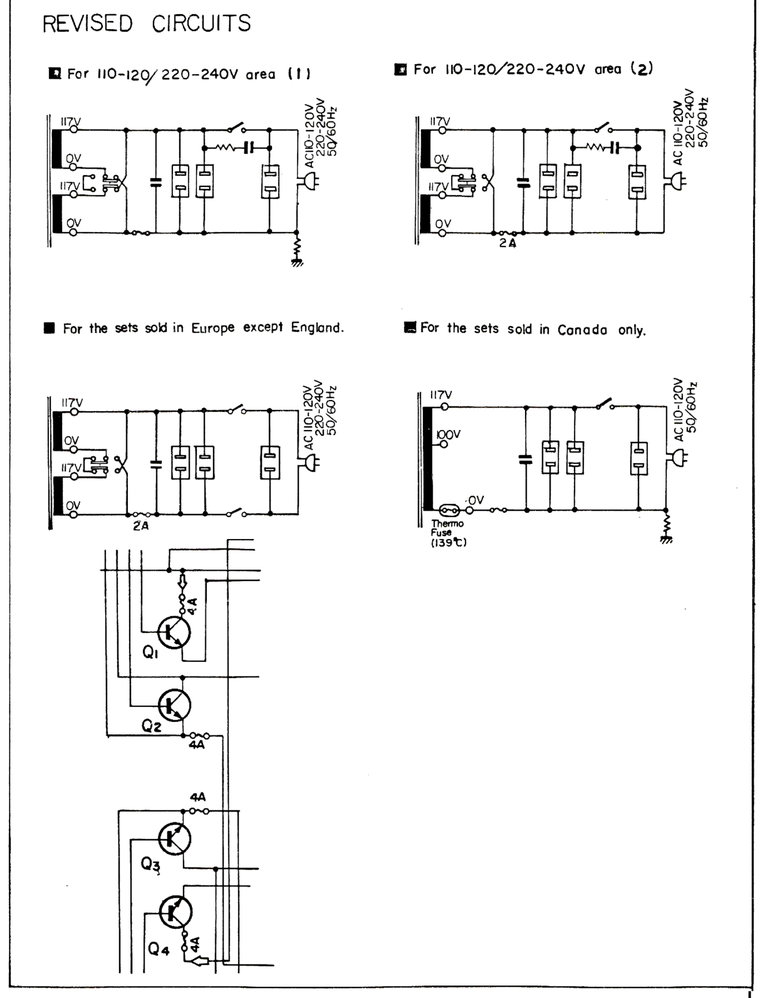

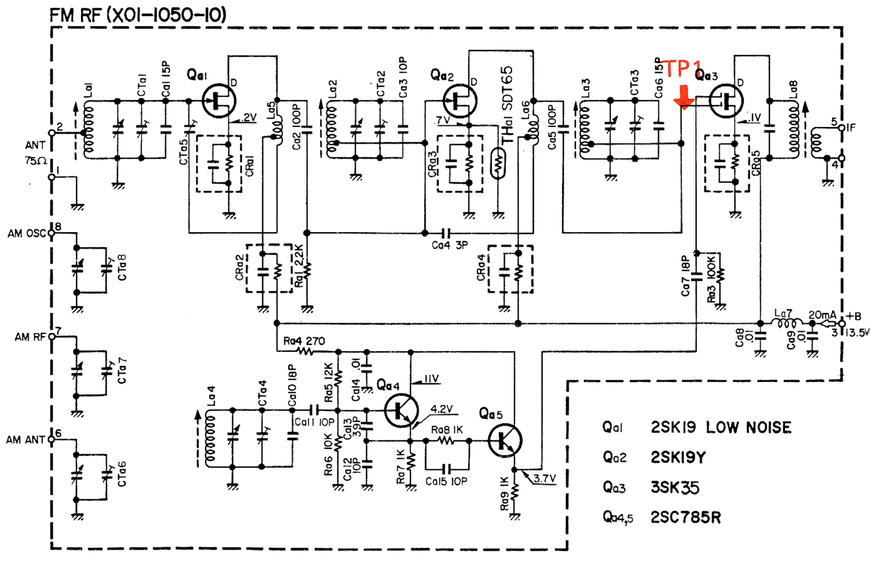

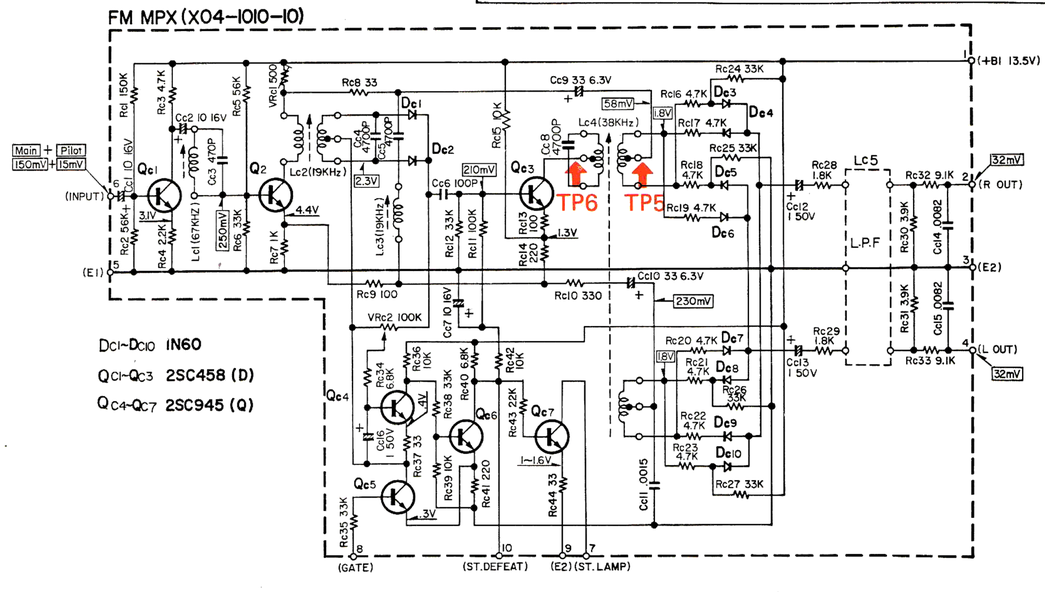

COLOR CODE

RESISTOR

COLOR (meaning)	1st (value)	2nd (value)	3rd (multiplier)	4th (tolerance)
Black	0	0	10^0	–
Brown	1	1	10^1	±1%
Red	2	2	10^2	±2%
Orange	3	3	10^3	–
Yellow	4	4	10^4	–
Green	5	5	10^5	–
Blue	6	6	10^6	–
Purple	7	7	10^7	–
Grey	8	8	10^8	–
White	9	9	10^9	–
Gold	–	–	10^{-1}	±5%
Silver	–	–	10^{-2}	±10%
Non-color	–	–	–	±20%

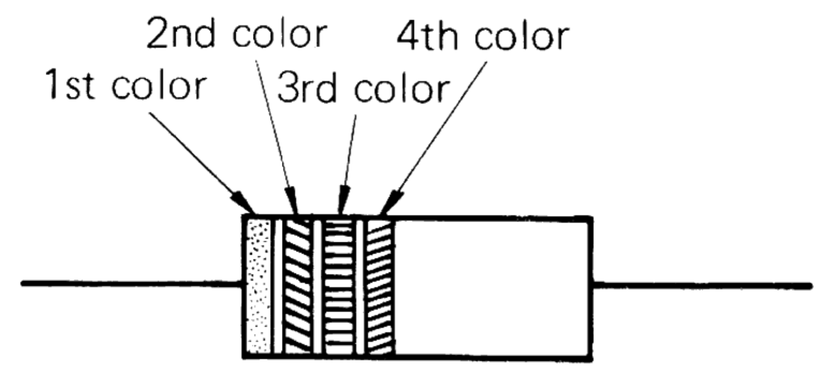

CAPACITOR (MICA)

COLOR (meaning)	1st (grade)	2nd (value)	3rd (value)	4th (multiplier)	5th (tolerance)	6th (characteristic)
Black	X	0	0	10^0	±20%	–
Brown	–	1	1	10^1	±1%	B
Red	Z	2	2	10^2	±2%	C
Orange	–	3	3	10^3	–	D
Yellow	–	4	4	10^4	–	E
Green	–	5	5	–	* ±5%	–
Blue	–	6	6	–	–	–
Purple	–	7	7	–	–	–
Grey	Y	8	8	–	–	–
White	–	9	9	0.1	±10%	–

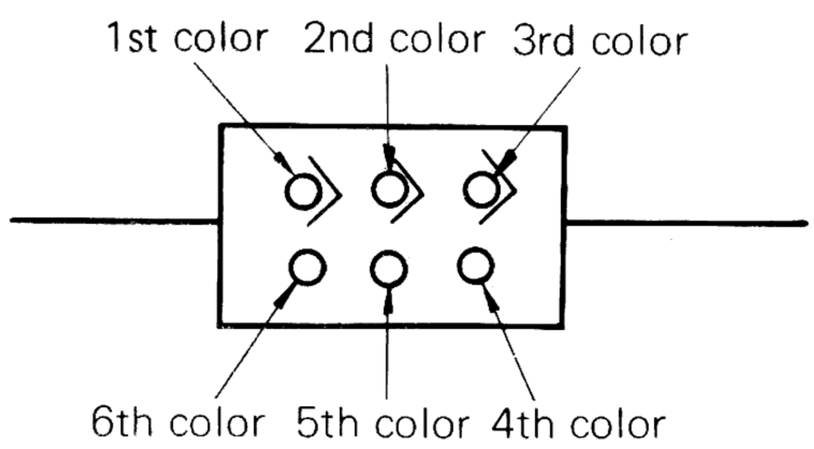

Unit = pF

* Capacitance being less than 10pF is ±0.5pF on tolerance.

www.hifiengine.com

KENWOOD ELECTRONICS, INC.

- 15777 SOUTH BROADWAY, GARDENA, CALIFORNIA 90248
- 72-02 51ST AVENUE, WOODSIDE. N.Y. 11377

CANADIAN EXCLUSIVE DISTRIBUTOR

MAGNASONIC CANADA LTD.

- 4980 BUCHAN ST. MONTREAL P.Q, CANADA
- 14 BANIGAN DRIVE THORNCLIFFE PARK TORONTO CANADA

1972-5 PRINTED IN JAPAN (G)

www.hifiengine.com