KENWOOD

HI/FI STEREO COMPONENTS

SERVICE MANUAL

KR-8840 (KR-8040)

KR-9940 (KR-9040)

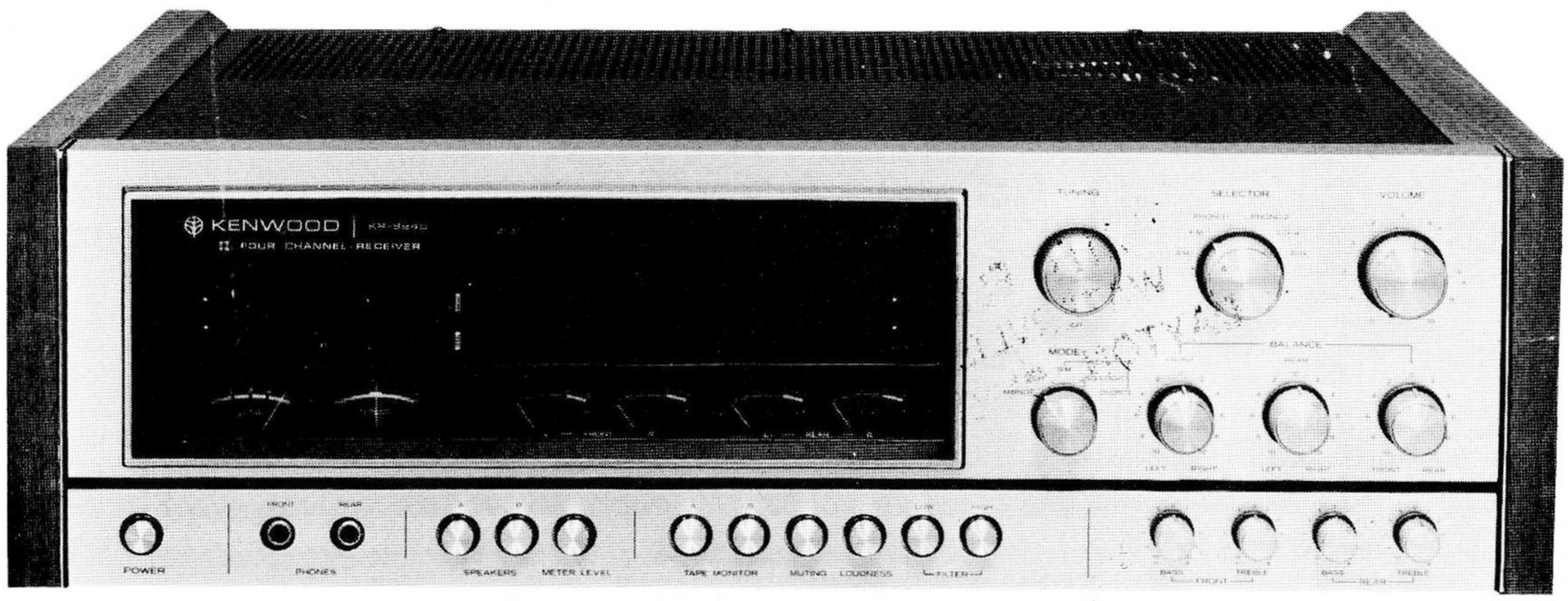

FOUR CHANNEL RECEIVER

www.hifiengine.com

CONTENTS

EXTERNAL & TOP VIEW 3
BOTTOM VIEW 4
DISASSEMBLY 4
PACKING 5
BLOCK DIAGRAM 5
CIRCUIT DESCRIPTION 6
ADJUSTMENTS 8
DISASSEMBLY FOR ADJUSTMENTS 11
TROUBLESHOOTING 14
PARTS LIST
TOTAL 16
DESTINATIONS 17
MAIN AMP ASSEMBLY 19
SUB UNIT ASSEMBLY 19
TUNER & PREAMP ASSEMBLY 19
POWER SUPPLY (X00-1370-10) 20
POWER SUPPLY (X00-1590-10) 20
TUNER (X05-1080-15) 20
MAIN AMP (X07-1230-13, 14) 22
PREAMP (X08-1180-00) 22
TONE AMP (X11-1130-00) 22
POWER SUPPLY & PROTECTION
(X13-1560-10) 23
PUSHBUTTON SW (X13-1570-11) 23
CD-4 (X15-1120-06) 24
SQ/RM (X15-1170-00) 26
PC BOARD
POWER SUPPLY (X00-1370-10) 27
POWER SUPPLY (X00-1590-10) 27
TUNER (X05-1080-15) 28
MAIN AMP (X07-1230-13) 29
PREAMP (X08-1180-00) 30
TONE AMP (X11-1130-00) 30
POWER SUPPLY & PROTECTION
(X13-1560-10) 31
PUSHBUTTON SW (X13-1570-11) 31
CD-4 (X15-1120-06) 32
RM/SQ (X15-1170-00) 33
SEMICONDUCTOR SUBTITUTIONS 34
MODIFICATIONS SCHEMATIC 35
KR-9940, 8840 MODIFICATION POINTS 35
SCHEMATIC DIAGRAM 36
SPECIFICATIONS 38

Note:
The products are subject to modification in components and circuits in different countries and regions. This is because each product must be used under the best condition. This manual provides information of modification based on the standard in the U.S., for the convenience of ordering associated components and parts.

The model name of KR-9040 and KR-8040 is KR-9940 and KR-8840 for "Audio Club". There is no difference of circuit fundamentally between KR-9940, -8840 and KR-9040, -8040 except dress panel and some others.

U.S.A. . . . . **K**
Canada . . . . . **P**
PX . . . . . **U**
Australia . . . . . **X**
Europe . . . . . **W**
England . . . . . **T**
Scandinavia . . . . . **L**
Other area . . . . . **M**
Audio clube . . . . . **W_2**

www.hifiengine.com

EXTERNAL & TOP VIEW

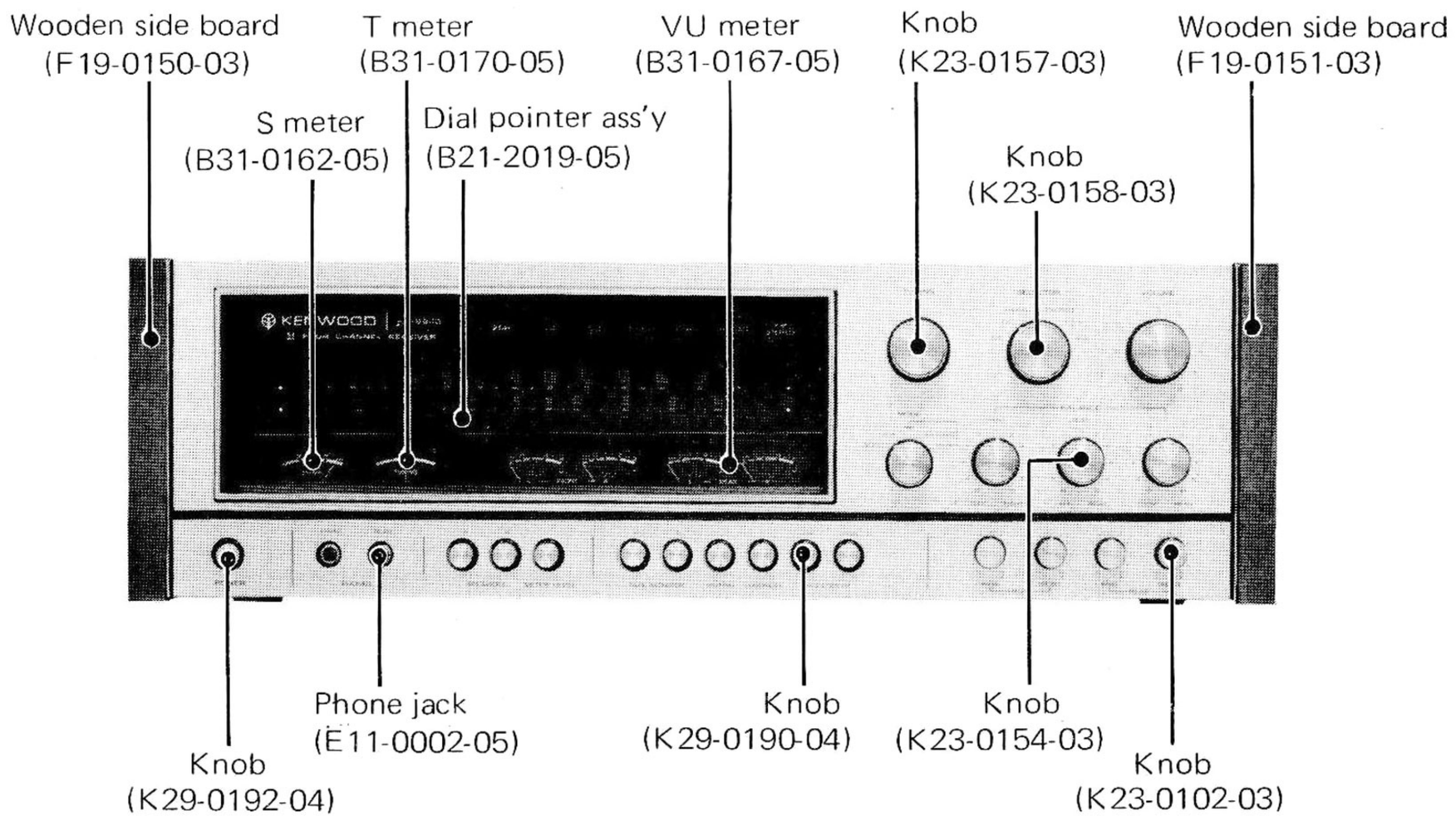

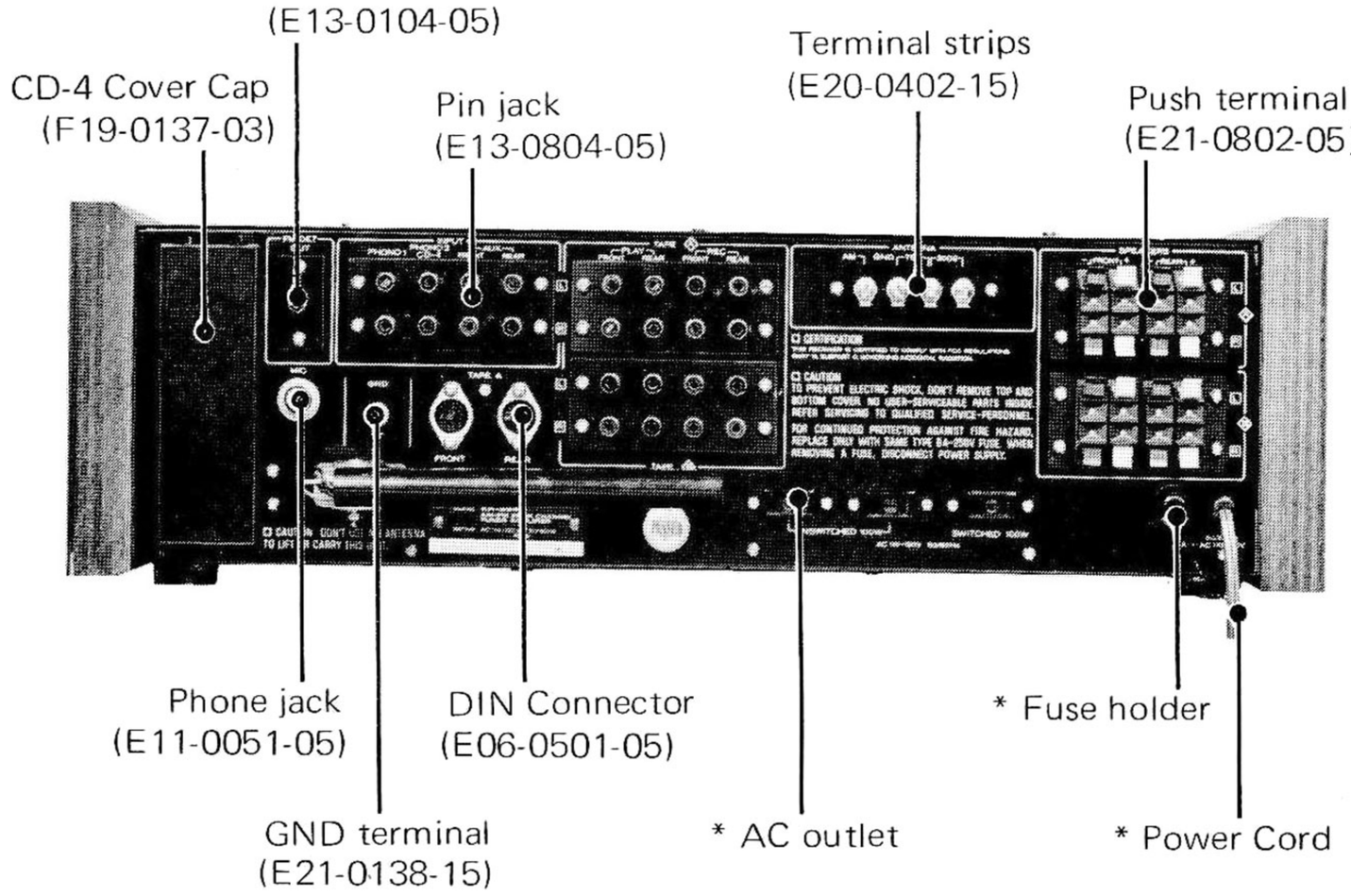

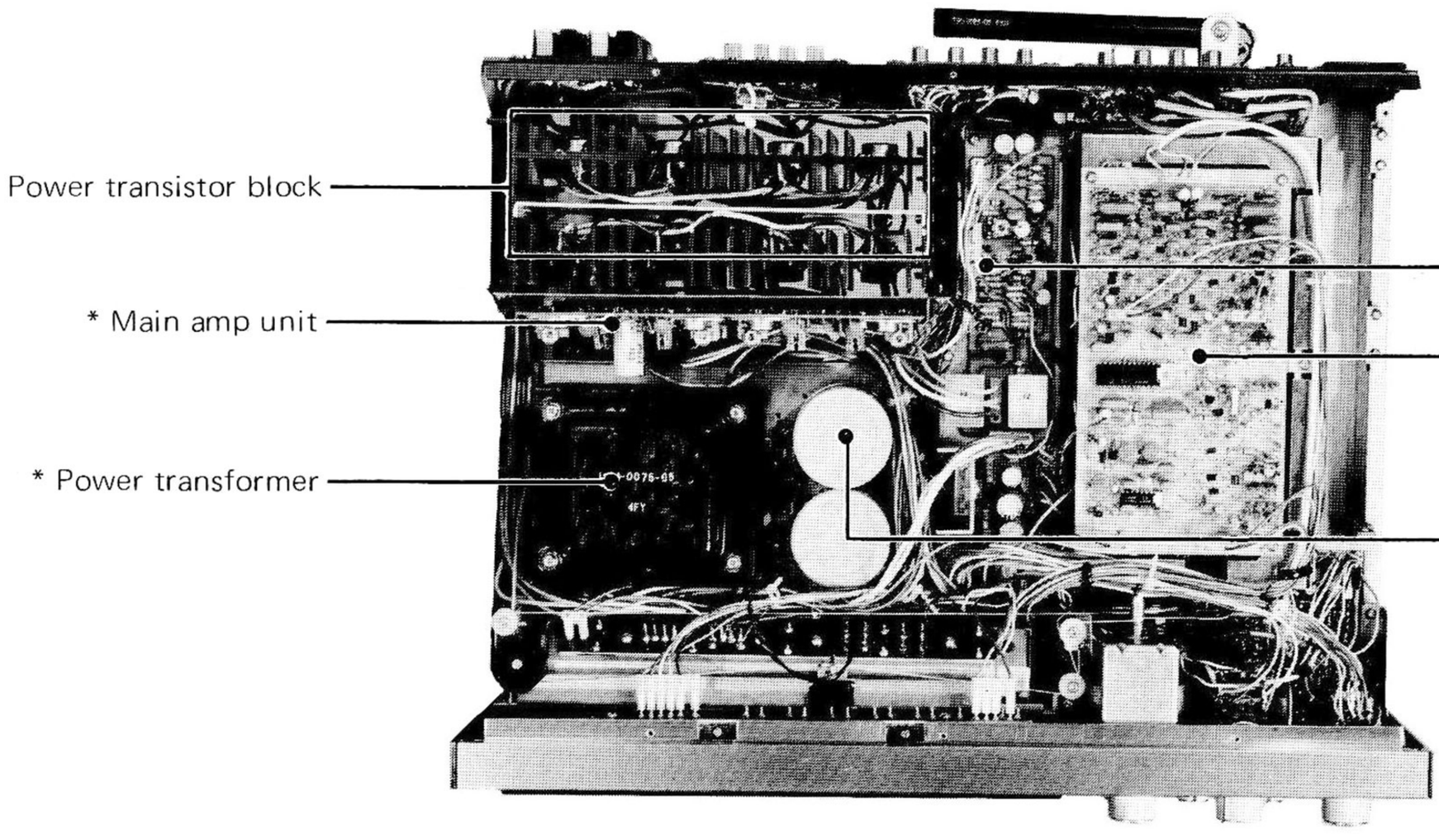

This is KR-9940.

* Refer to Parts List.

www.hifiengine.com

BOTTOM VIEW/DISASSEMBLY

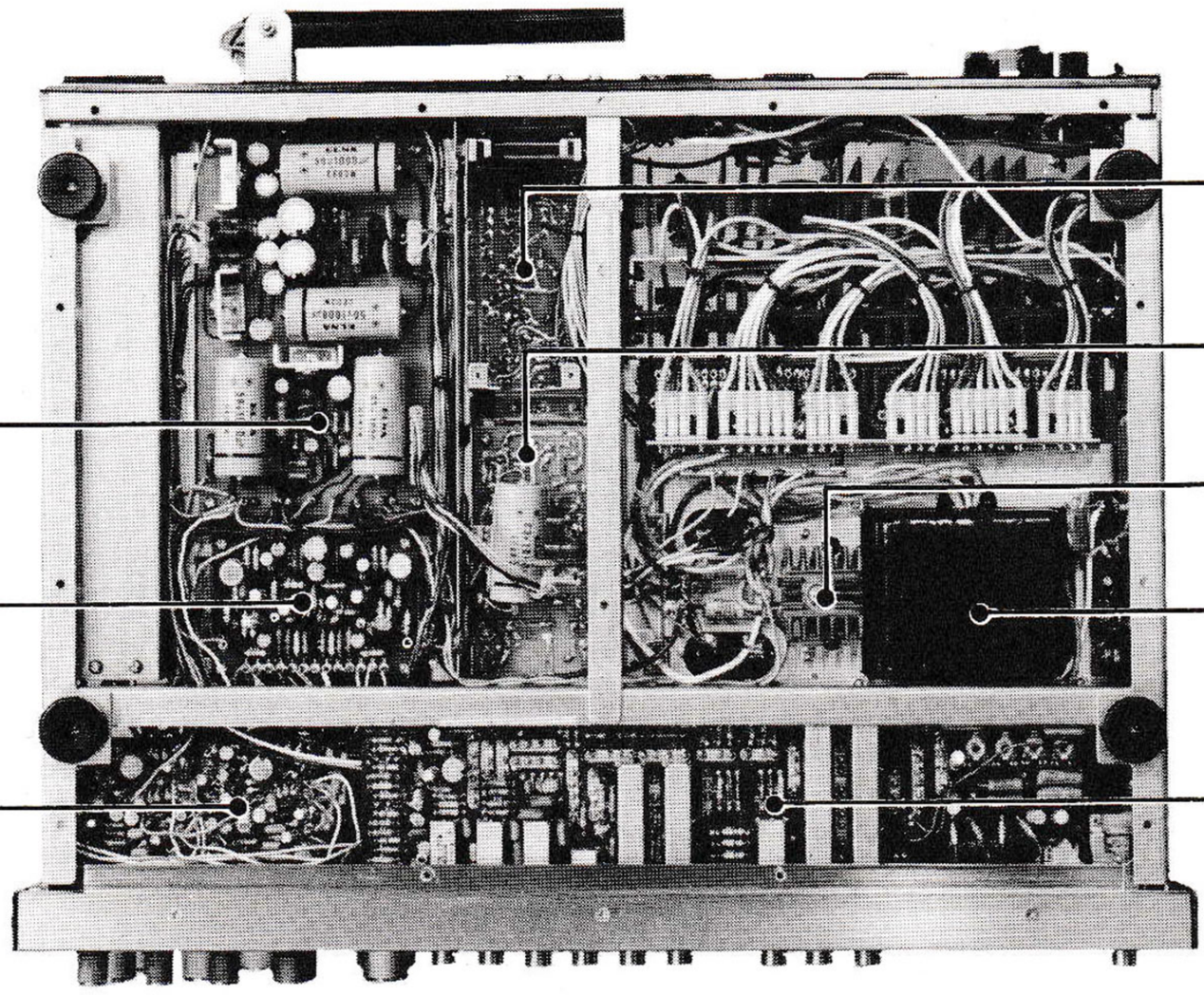

* Power supply unit

Preamp unit
(X08-1180-00)

Tone amp unit
(X11-1130-00)

Power supply unit
(X00-1590-10)

* Power supply unit

Diode (S4B-01)

* Power transformer

Push button switch unit
(X13-1570-11)

*** Refer to Parts List.**

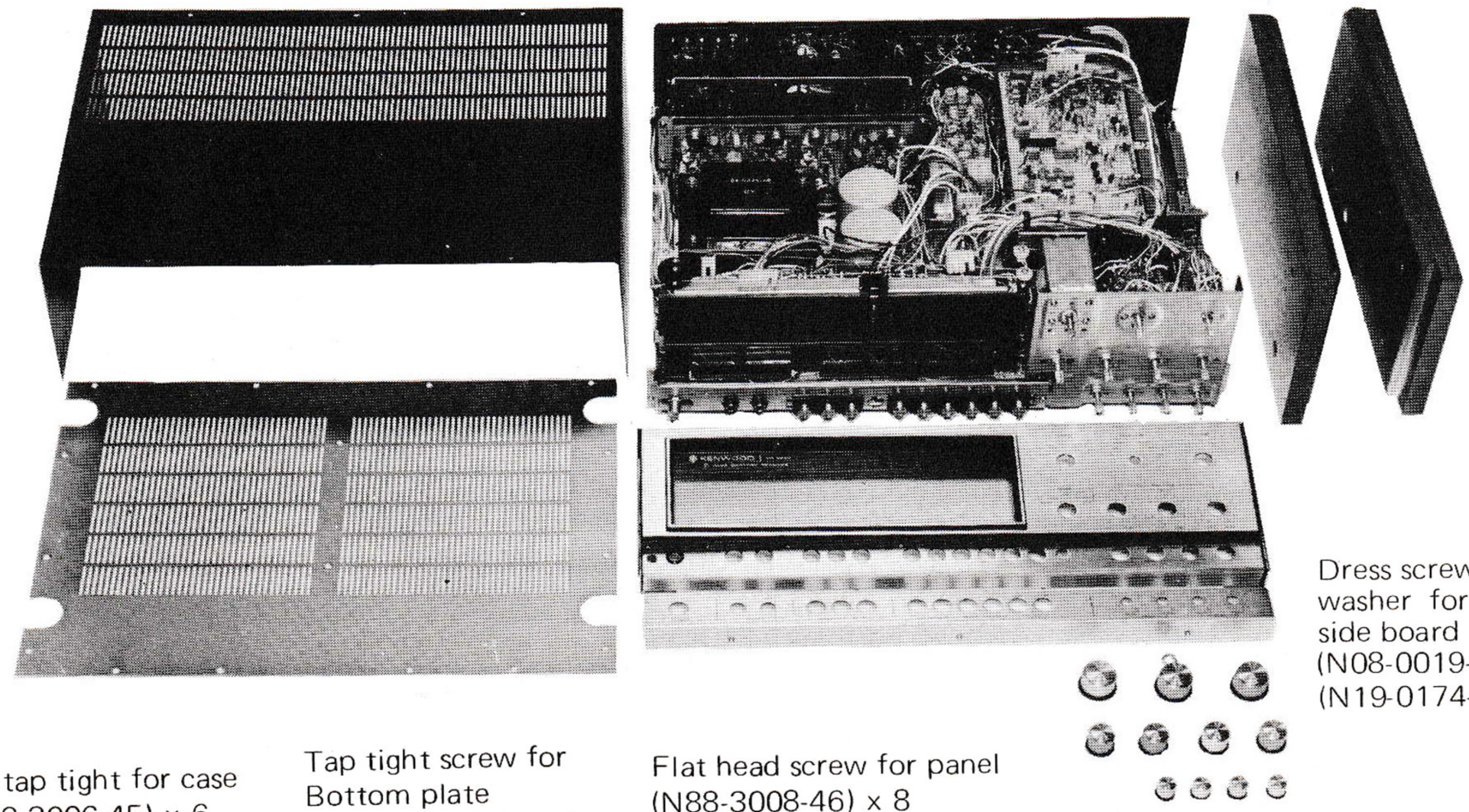

Bind tap tight for case
(N89-3006-45) x 6

Tap tight screw for
Bottom plate
(N87-4008-46) x 13

Flat head screw for panel
(N88-3008-46) x 8

Dress screw and flat washer for wooden side board
(N08-0019-04) x 6
(N19-0174-04) x 6

www.hifiengine.com

PACKING/BLOCK DIAGRAM

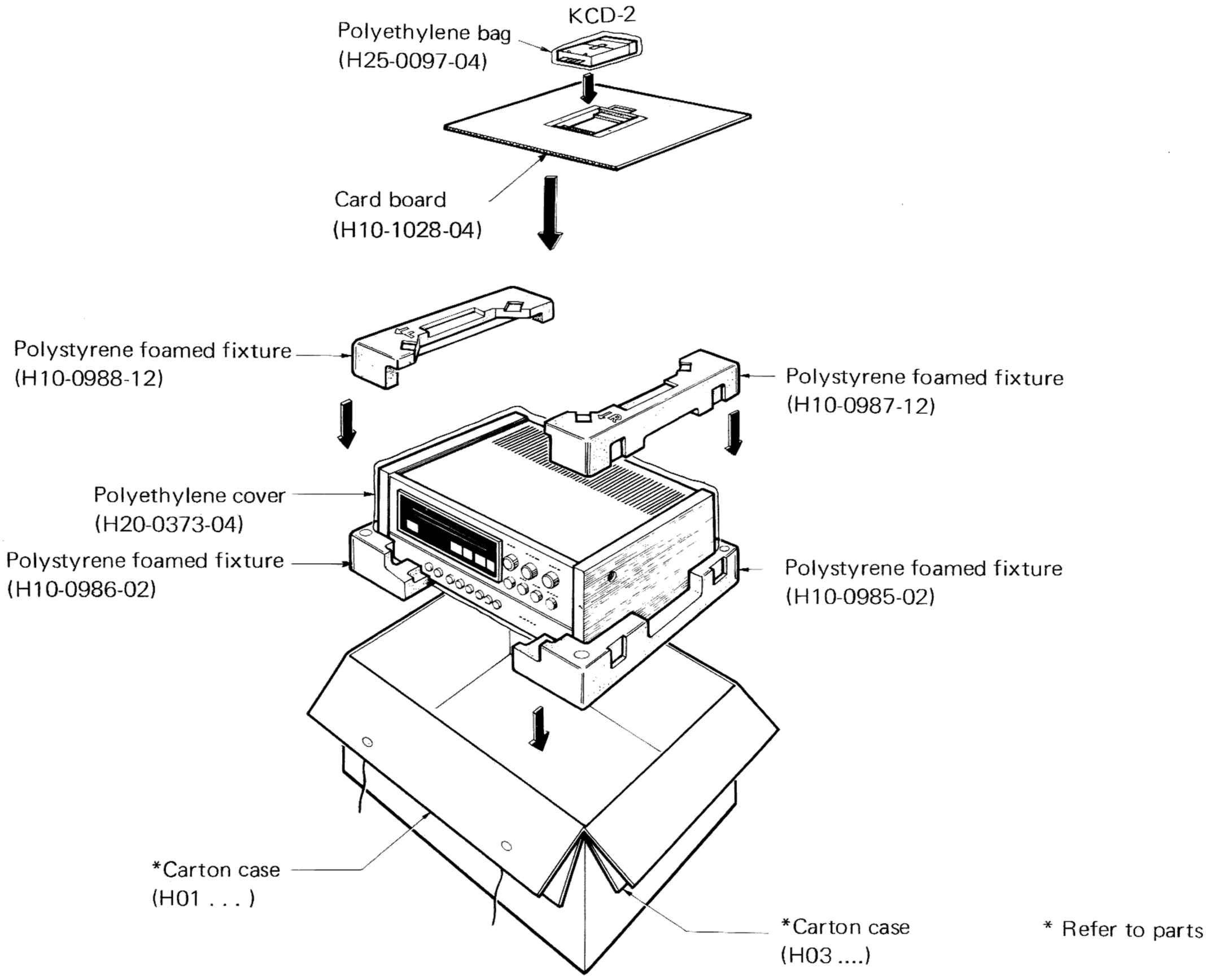

* Refer to parts list

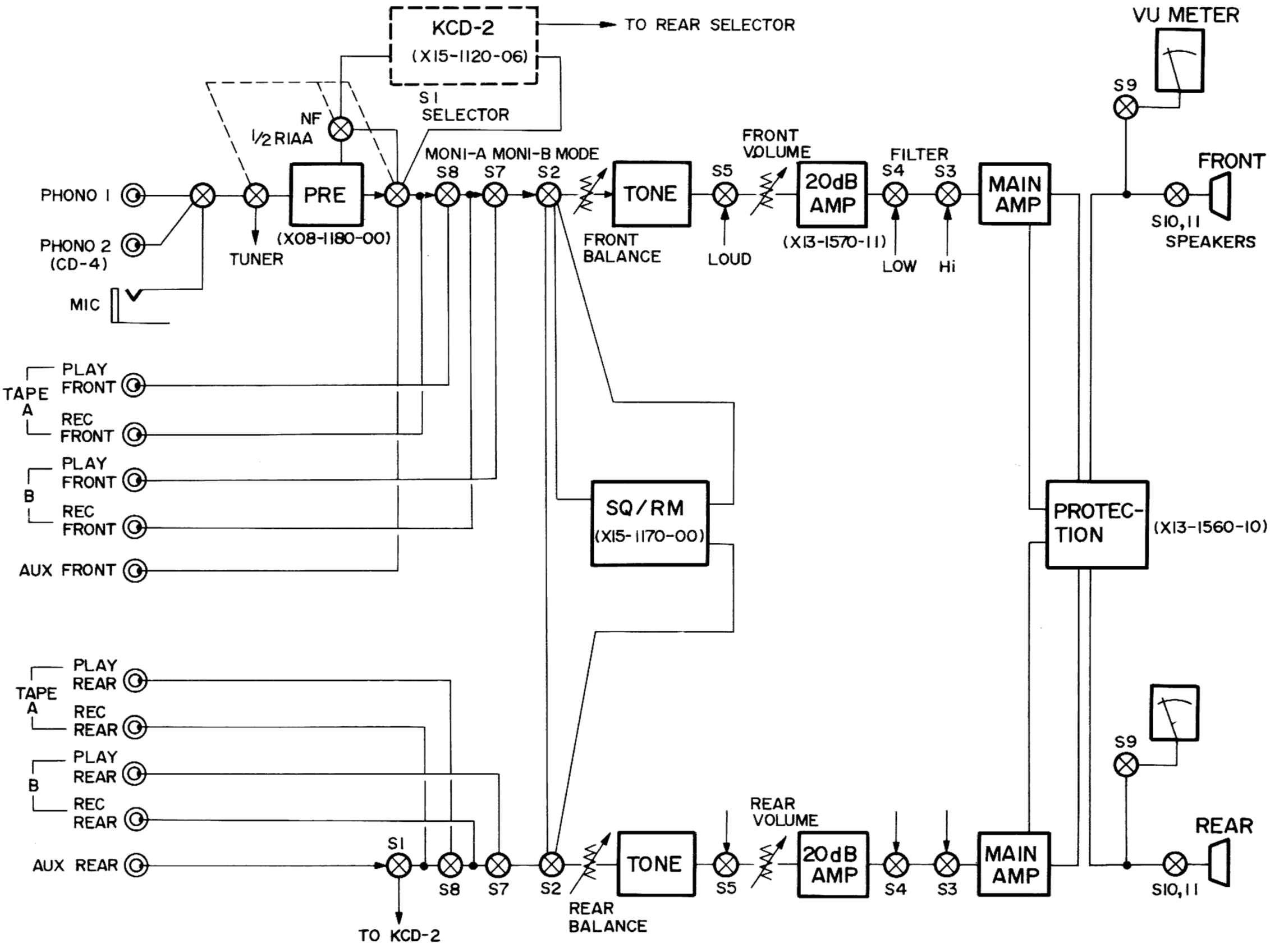

www.hifiengine.com

CIRCUIT DESCRIPTION

1. RM Decoder Circuit

The encoded input signals of LT and RT are fed to the No. 4 and No. 2 terminals of SQ/RM unit, respectively. The signals are then separated into 4 signals, each having 90° phase difference, by the phase shifter consisting of Qy1 ~ 14. The phase shifter forms a circuit common to SQ and RM. To achieve the matrix effect more easily, only the RB component is matrix processed by Ry59 and Ry60 after being phase inverted by the inverter Qy16.
The 4 signals in RM 4-channel mode are amplified up to the AUX level by Qy23 ~ 26 and are fed as output signals.

2. SQ Decoder Circuit

The encoded input signals of LT and RT are fed to the No. 4 and No. 2 terminals of SQ/RM unit, respectively, and then phase shifted by 90° by the phase shifter Qy1 ~ 14. The transistor Qy15 is an inverter for LF signal in SQ mode. The signals are separated by the SQ matrix composed of Ry53 and Ry54, which are then amplified by the SQ amplifier Qy17 ~ 20.

3. Function of SQ Logic

This circuit is a full logic circuit comprising a variable blend system front-back logic (F/B) and an attenuation system waveform matching logic (W/M).

3-1. Front-back Logic

The conventional gain control system front-back logic circuit using electronic attenuator has such a disadvantage that the wanted signals tend to be suppressed together with the crosstalk signals. In contrast with this, the Variable Blend System has a feature to cancel only the crosstalk component by mixing L and R signals, since the crosstalk signals on the front and back are in opposite phase relationship for each other.
The LF and RF signals are blended by a certain amount with Ry97 (43 kΩ), while the LB and RB signals are automatically blended in response to the original sound field.

Front blend (10% blend)
. . . . . LF—RF separation: 20 dB
Back blend (20% ~ 80% blend)
. . . LB-RB separation: 3 dB ~ 14 dB (variable)

3-2. Waveform Matching Logic

This circuit improves the crosstalk among the 4-channel signals for the front-back logic. The 4 signals which have been processed in SQ matrix are compared with each another by the logic signal detecting IC CX-049 to obtain waveform matching logic signal for each of the front and back channels. Utilizing this signal, the gain control IC CX-718 controls the output gain of each channel so that the playback sound field similar to the original sound field can be obtained.

4. Function of Logic Circuit

Front-back Logic

CX-049 is a logic detecting IC. With the 4 signals, which have been processed through the SQ matrix, fed to the IC CX-049, it produces front-back trigger signals and waveform matching trigger signals. The LB and RB signals are blended variably within a range of 20% ~ 80%. When the front signal is larger than the back signal, a negative voltage generates at the No. 24 terminal where the voltage at Qy35 collector rises while the impedance between the source and drain of Qy43 decreases, thus increasing the amount of blend. The voltages at the emitters of Qy31 and Qy32 in the gain control amplifier are regulated by Qy36 and Qy38 operated by the comparison value of the front-back logic signal.

5. Function of Waveform Matching Logic

As in the case of the front-back logic, a logic signal is detected by CX-049, controlling the channel crosstalk and improving the points of sound field according to the strength (point of sound) of the signal for each channel. The No. 16 and No. 19 terminals of CX-049 are normally kept at 0 V where the attenuation of CX-718 is set to about 4 ~ 5 dB (adjusted by VRy3).
The logic start timing and the level of W/M logic signal detected at No. 16 and No. 19 terminals are controlled by the time constant circuit and the diode slicer.
CX-718 is composed of P channel FET. When a positive voltage is fed to the gate, the impedance between the drain and source is increased, and when a negative voltage is fed it is decreased, thus attenuating the 4-channel signals. The attenuation range of CX-049 is about 20 dB.

VRy1 . . . . . Adjust for front W/M logic
VRy2 . . . . . Adjust for back W/M logic
VRy3 . . . . . Adjust for W/M logic setting level

www.hifiengine.com

CIRCUIT DESCRIPTION

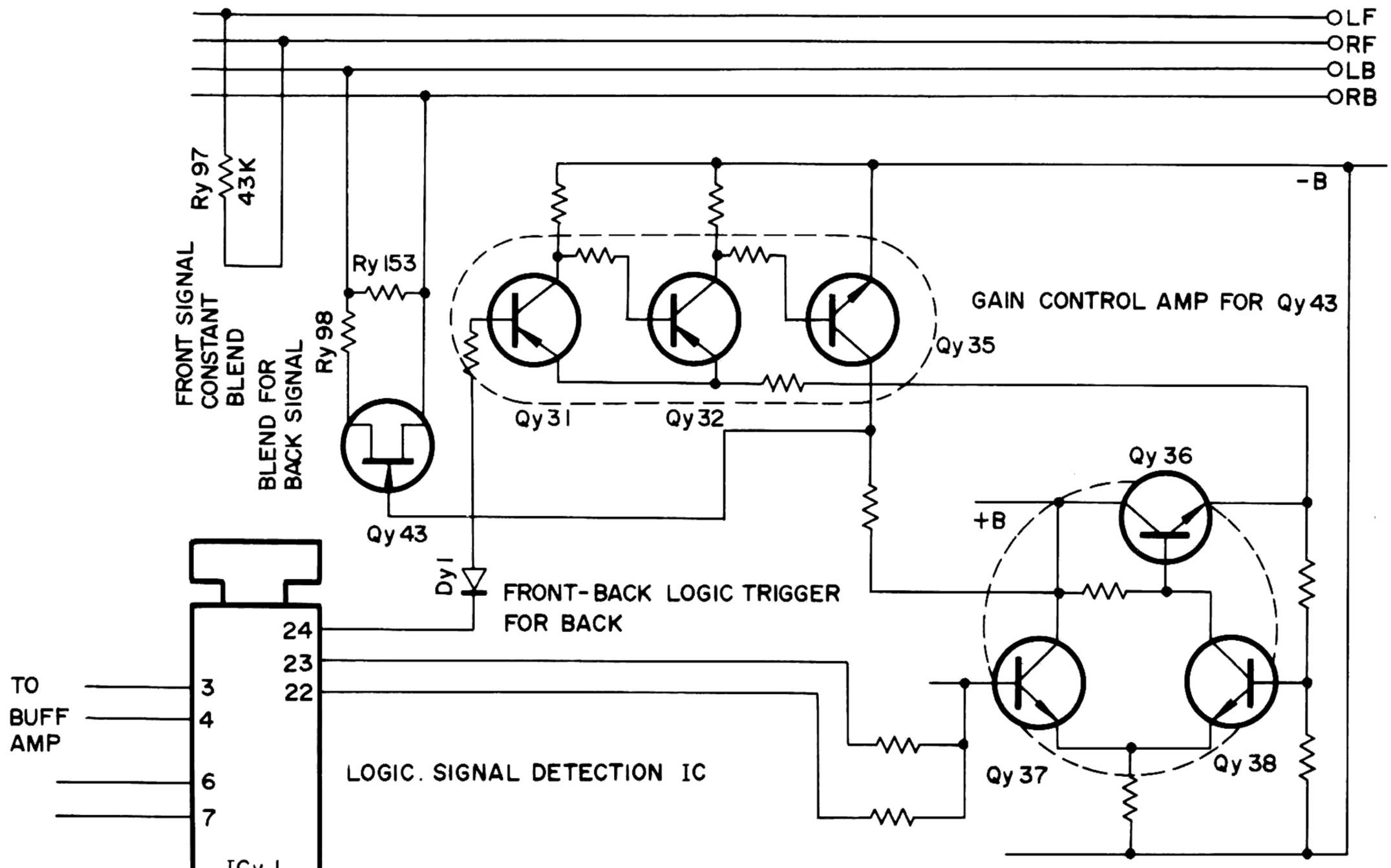

ICy1 (CX-049)

1. GND
3. 4CH INPUT
5. −B
6. 4CH INPUT
7. 4CH INPUT
11,12 TIME CONSTANT
13,14 TIME CONSTNAT
16. W/M LOGIC OUT
19. W/M LOGIC OUT
20. +B
21. F/B LOGIC OUT (FRONT)
22. F/B LOGIC INTERMEDIATE OUT (FRONT)
23. F/B LOGIC INTERMEDIATE OUT (FRONT)
24. F/B LOGIC OUT (BACK)
25. −B

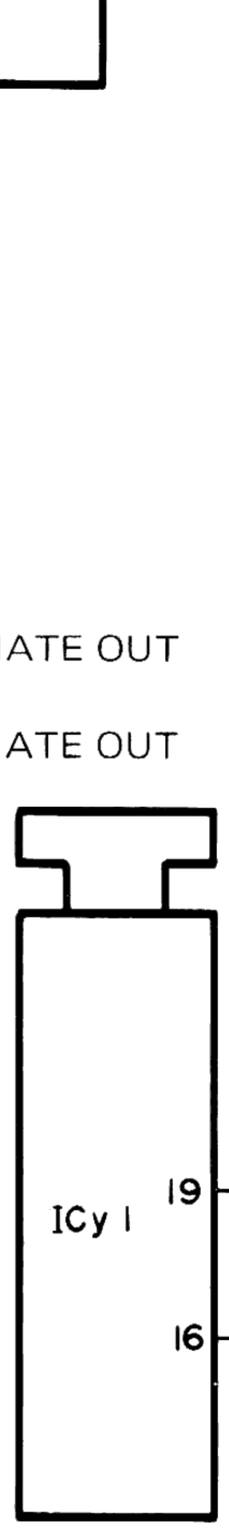

ICy2 (CX-718)

3,8	GATE
1,5,10,14	DRAIN
4,7,11	SOURCE
15.	SUB

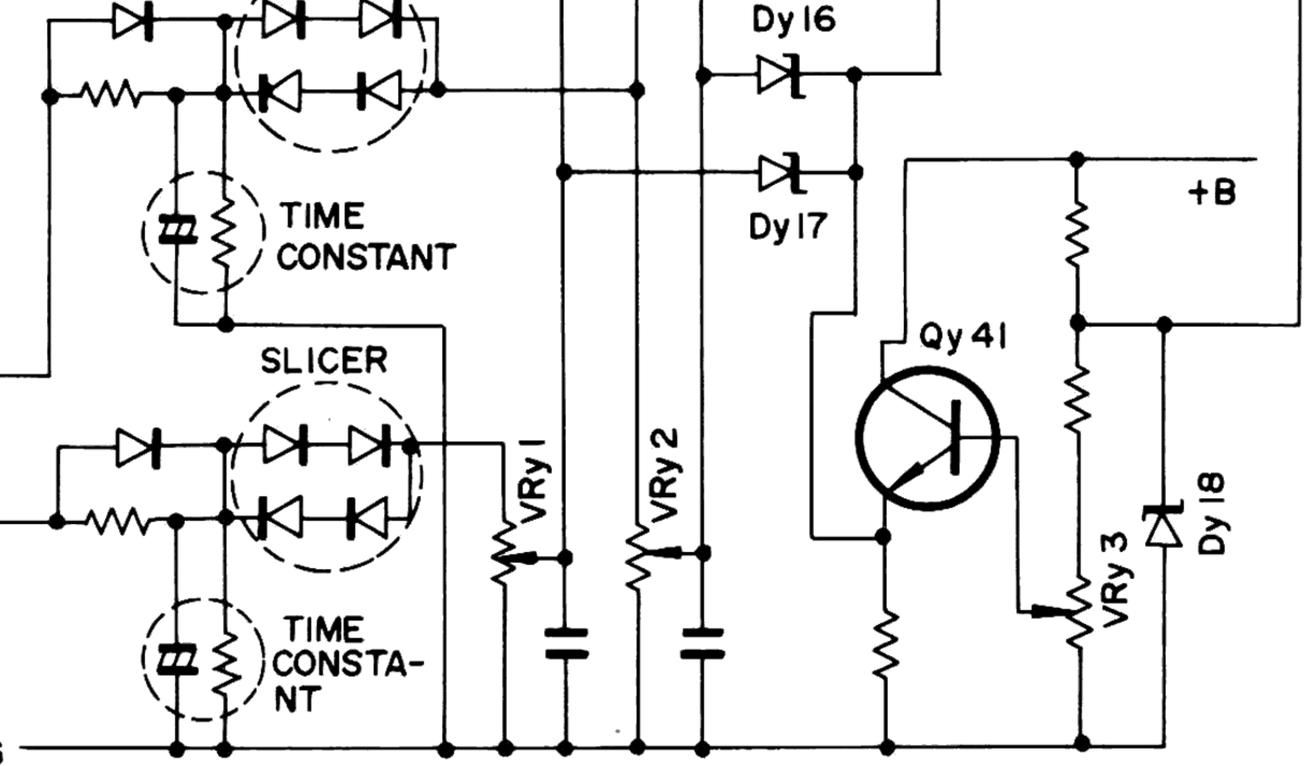

www.hifiengine.com

ADJUSTMENTS

BEFORE ADJUSTMENT

* Tuning dial is set to the proper point corresponding to no radio stations.
* The sweep and the r.f. generator are set to the lowest response possible on oscilloscope.
* When connecting the r.f. generator to the antenna terminal using the dummy antenna . . . . . refer to figure 1.
* Use the insulated screwdriver adjusting the i.f.t.
* SELECTOR is FM position.
* FM MUTING is OFF position unless it is required.
* Test point shown in the schematic diagram.
* For the "tracking adjust.", repeat several times and confirm the reception of broadcasts.

NO.	ALIGN	TEST EQUIPMENTS		RECEIVER SETTING	OUTPUT INDICATOR	ADJUSTMENT POINTS	REMARKS
		CONNECTION	SETTING				
FM SECTION							
1	IFT	SWEEP to TP1 via. 5pF cap.	10.7 MHz	Non-station	SCOPE to TP2 via 100 kΩ resist.	Tg4, 5, 8	Maximum deflection (Fig. 2)
2	DIS-CRIMINATOR	Same	Same	Same	VTVM & SCOPE to REC jack	Tg9	S-response and its symmetry on each side of 10.7 MHz center frequency (Fig. 3)
3	TRACKING	RF-SG to ANT via. dummy ant.	90 MHz 75 kHz (Dev.) 400 Hz (Mod.)	90 MHz	Same	Tg1 ~ 3	Maximum deflection
4	TRACKING	Same	105 MHz 75 kHz (Dev.) 400 Hz (Mod.)	105 MHz	Same	CTg1 ~ 3	Same
5	AF OUTPUT	Same	100 MHz 75 kHz (Dev.) 400 Hz (Mod.) 60 dB (Input)	100 MHz	Same	VRg3	Output is 1.0V
6	SCA	AG to TP3	67 kHz	Non-station	VTVM & SCOPE to TP4	Tg12	Minimum deflection
7	SEPARATION	RF-SG to ANT via. dummy ant. MPX-SG to RF-SG ext. jack.	95 MHz 67.5 kHz (Dev.) 400 Hz (Mod.) 60 dB (Input) L or R (SELECTOR)	95 MHz	VTVM & SCOPE to REC jack	VRg4	Minimum deflection
8	BEACON	Same	95 MHz 40 kHz (Dev.) 400 Hz (Mod.) 60 dB (Input)	95 MHz	Stereo Indicator	VRg5	Indicator lights.
AM SECTION							
1	IFT	RF-SG to Ant.	1,000 kHz 400 Hz (30% Mod.)	1,000 kHz	VTVM & SCOPE to REC jack	Tg10, 6, 7	Maximum deflection
2	TRACKING	Same	600 kHz 400 Hz (30% Mod.)	600 kHz	Same	Tg11 Ferrite ANT	Same
3	TRACKING	Same	1,400 kHz 400 Hz (30% Mod.)	1,400 kHz	Same	CTg4, 5	Same
4	S-METER	Same	1,000 kHz 400 Hz (30% Mod.)	1,000 kHz	S meter	—	Confirm the meter deflection at 4.5

www.hifiengine.com

ADJUSTMENTS

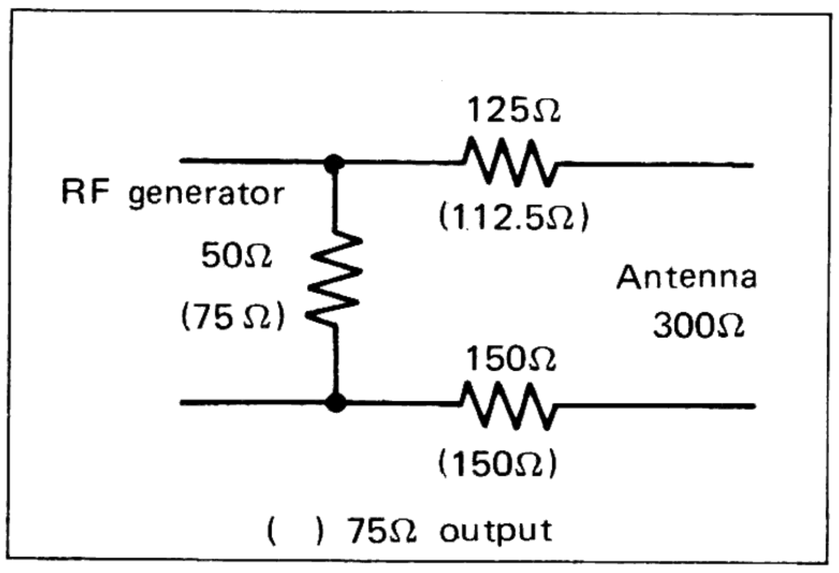

▲ Fig. 1 DUMMY ANT

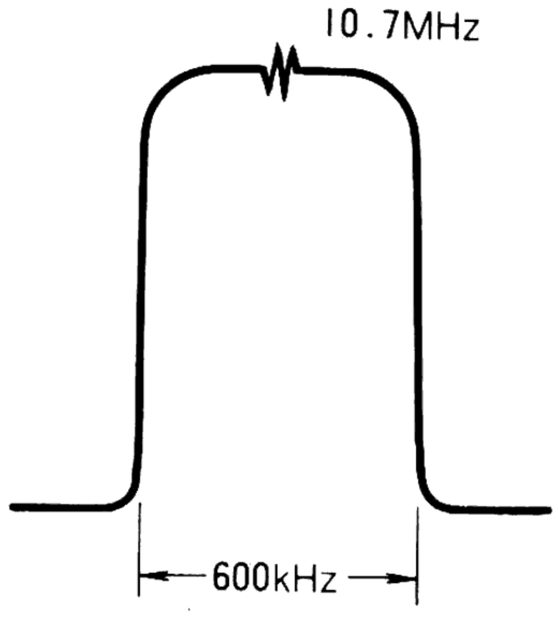

▲ Fig. 2 IF WAVEFORM

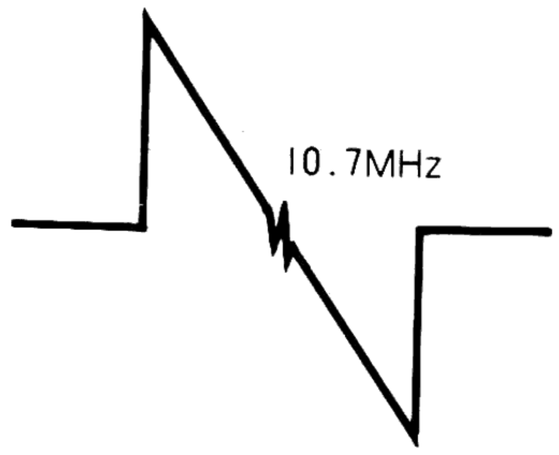

▲ Fig. 3. DISCRIMINATOR WAVEFORM

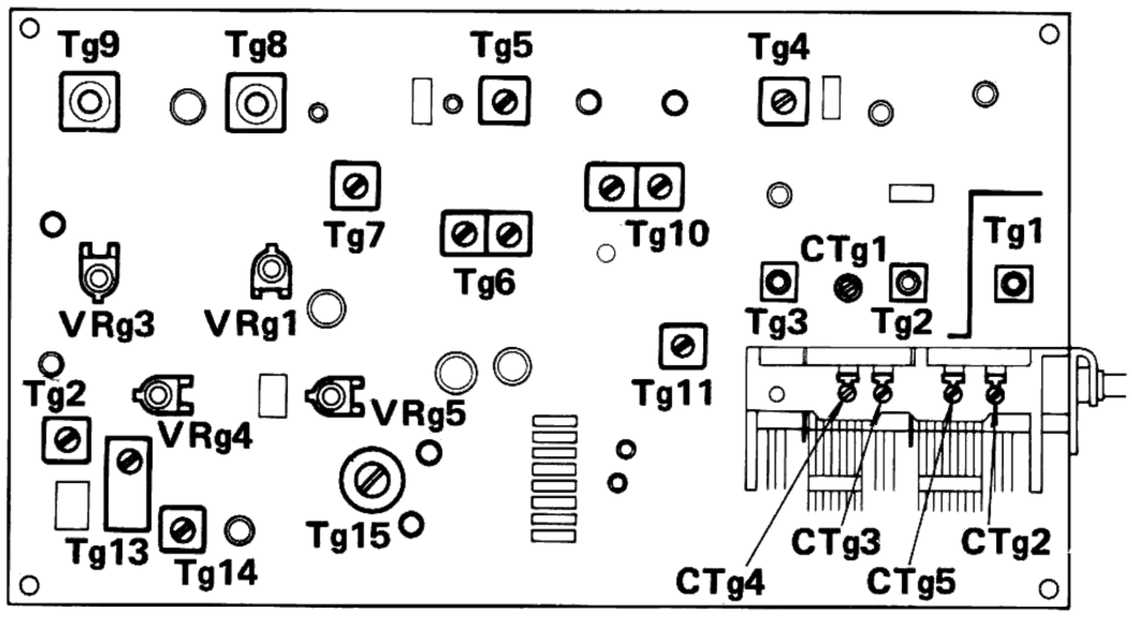

▲ Fig. 5 ADJ. POINT

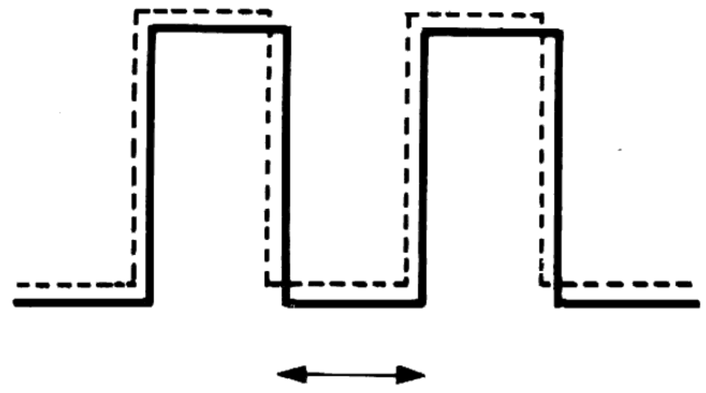

▲ Fig. 6 VCO ADJ.

NO.	ALIGN	TEST EQUIPMENT		OUTPUT INDICATOR	ADJUSTMENT POINTS	REMARKS
		CONNECTION	SETTING			
***CD-4 SECTION**						
Turn the balance on the front panel and defeat the front signal so that the back signal only can be heard.						
1	**SEPARATION**	Playback TEST RECORD	RG-1256 BAND-1	—	VRz9	The signal from CH2 (LEFT-BACK) can be reduced to a minimum.
2	**SEPARATION**	Playback TEST RECORD	RG-1256 BAND-3	—	VRz10	The signal from CH4 (RIGHT-BACK) can be reduced to a minimum.
Turn VRz11 to full clockwise position.						
3	**30kHz LEVEL**	Playback TEST RECORD	RG-1256 BAND-9		VRz11	Turn clockwise one indication mark from the point where tone quality will suddenly change.
4	**VCO (Fig. 6)**	Playback TEST RECORD	RG-1256 BAND-9	SCOPE to TPz1	VRz1	Waveform on the scope does not shift, when the record signal is applied or not.
5	**HC**	**This adjustment can't be effected by use of the test record. If you can't get the test equipment, don't touch potentiometer VRz2.**				
6	**EXPAND**	Playback TEST RECORD	RG-1256 BAND-8	VTVM to TPz4	VRz3	Meter indicates −15 dBm (138 mV) 0 dBm = 1W/600Ω = 0.775V
7	**ANRS**	AG to TPz4	700 Hz −15 dBm (138 mV)	VTVM to TPz8	—	Memorize the output level.
8	**ANRS**	AG to TPz4	700 Hz −25 dBm (44 mV)	VTVM to TPz8	VRz4	Meter indicates 15 dB lower than the memorized level. Note; after adjustment, switch the AG output at −15dBm (138mV) again, and confirm that the output level is exactly raised by 15 dB.

* **Circuit description for CD-4 gives you from KR9340 ~ 7340 service manual (B51-0214-00)**

* **Adjust the same adjustments for the other ch except "SEPARATION" adj.**

www.hifiengine.com

ADJUSTMENTS

NO.	ALIGN	TEST EQUIPMENT		OUTPUT INDICATOR	ADJUSTMENT POINTS	REMARKS
		CONNECTION	SETTING			
AUDIO SECTION						
1	BIAS	AG to Aux.	10 kHz	SCOPE across dummy load	VRe1 ~ 4	Waveform has not crossover distortion.
2	BIAS	—	—	IDLING METER across the emitter resistor of the power transistor	VRe1 ~ 4	Meter indicates around 25mV.
	Turn the VOLUME to the output level 6V/8Ω at the speaker terminal					
3	PROTECTION	Receive the interstation noise.			VRp1	Protection relay operates when the speaker terminal shorted.
	METER LEVEL on the front panel: ON					
4	*VU-METER	AG to Aux.	1 kHz 200 ~ 300 mV	SCOPE and VTVM across the dummy	VRh1 ~ 4	VU meter indicates 0VU when output level of KR-9940 is 20V/8Ω. (KR-8840 ..... 17V/8Ω)
	Balance and tone control; center					
5	RM	AG to Aux. R-ch or L-ch.	1 kHz 200 mV	VTVM across the dummy	—	Confirm that the output level is as table 1. (next page)
	This adjustment can't be effected by use of the "ENCODER". If you can't get it, don't need this adjustments. S1; SELECTOR → Aux, S2; MODE → SQ, BALANCE and VOLUME → Center, turn potentiometer VRy1 ~ 3 to full clockwise position. Adjust AG output level so that ENCODER output level is 100mV at LF or RF of "ENCODER". Connect the AG to AUX jack of the both channels.					
6	SQ	Set SELECTOR of ENCODER to 4 ch	1kHz 1V output at SP terminal	VTVM to SP terminal of LF.	VRy3	Meter indicates 0.7V (–3dB)
7	SQ	Set SELECTOR of ENCODER to LF	same	VTVM to SP terminal of LB and RB	VRy1	Meter indicates 0.32V (–9dB) respectively.
8	SQ	Set SELECTOR of ENCODER to LB	same	VTVM to SP terminal of LF and RF	VRy2	Meter indicates 0.32V (–9dB) respectively.

*** Make this adjustment by one channel.**

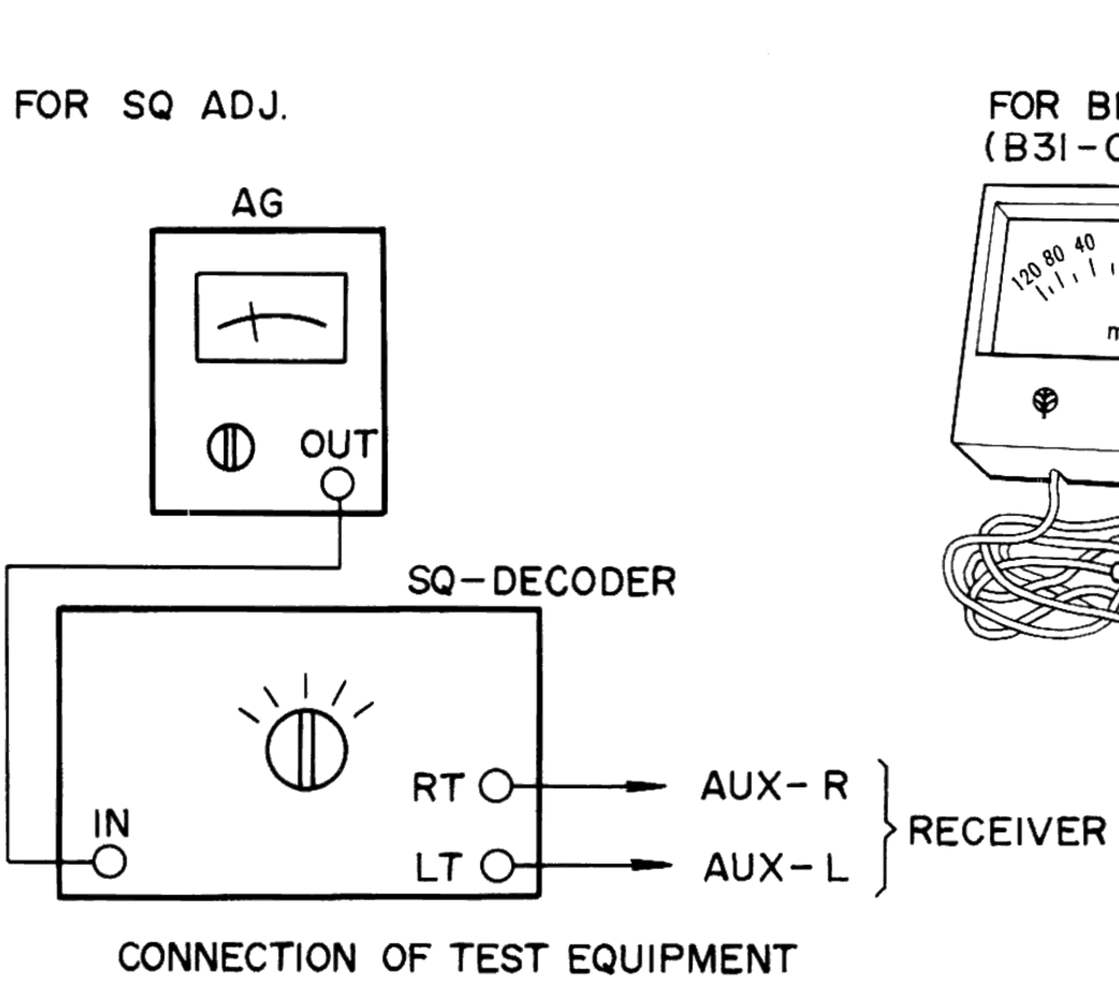

CONNECTION OF TEST EQUIPMENT

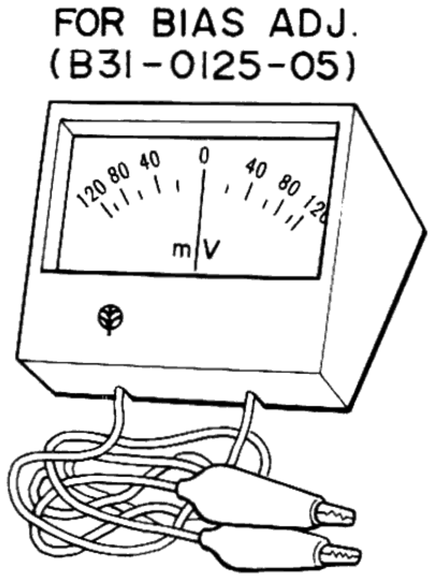

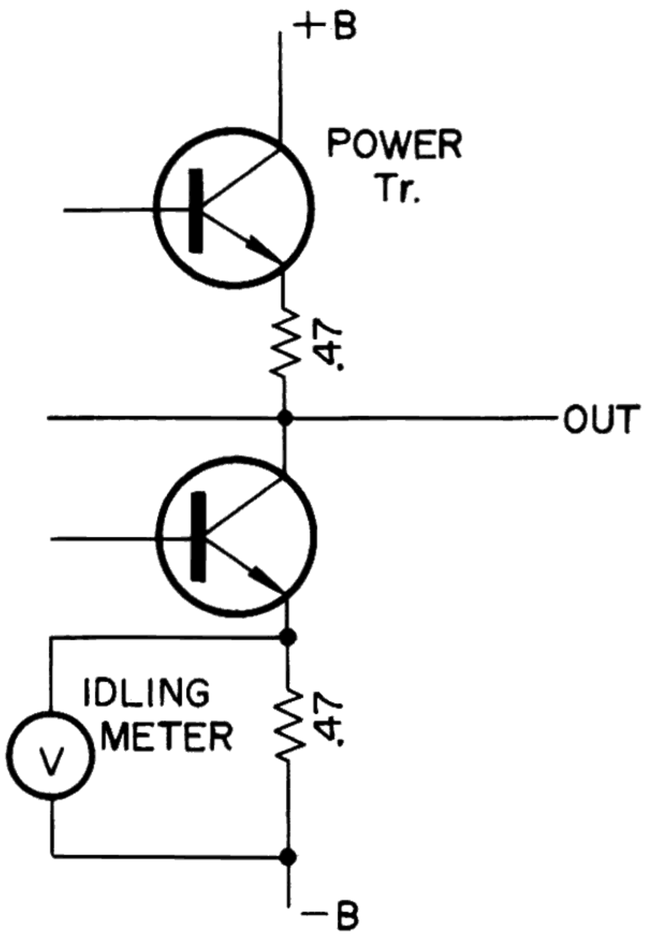

www.hifiengine.com

DISASSEMBLY FOR ADJUSTMENTS

The panel and dress panel are fixed by screws. When take off the panel, before take off the panel pull out the knobs (not including pushbutton), take off dress panel.

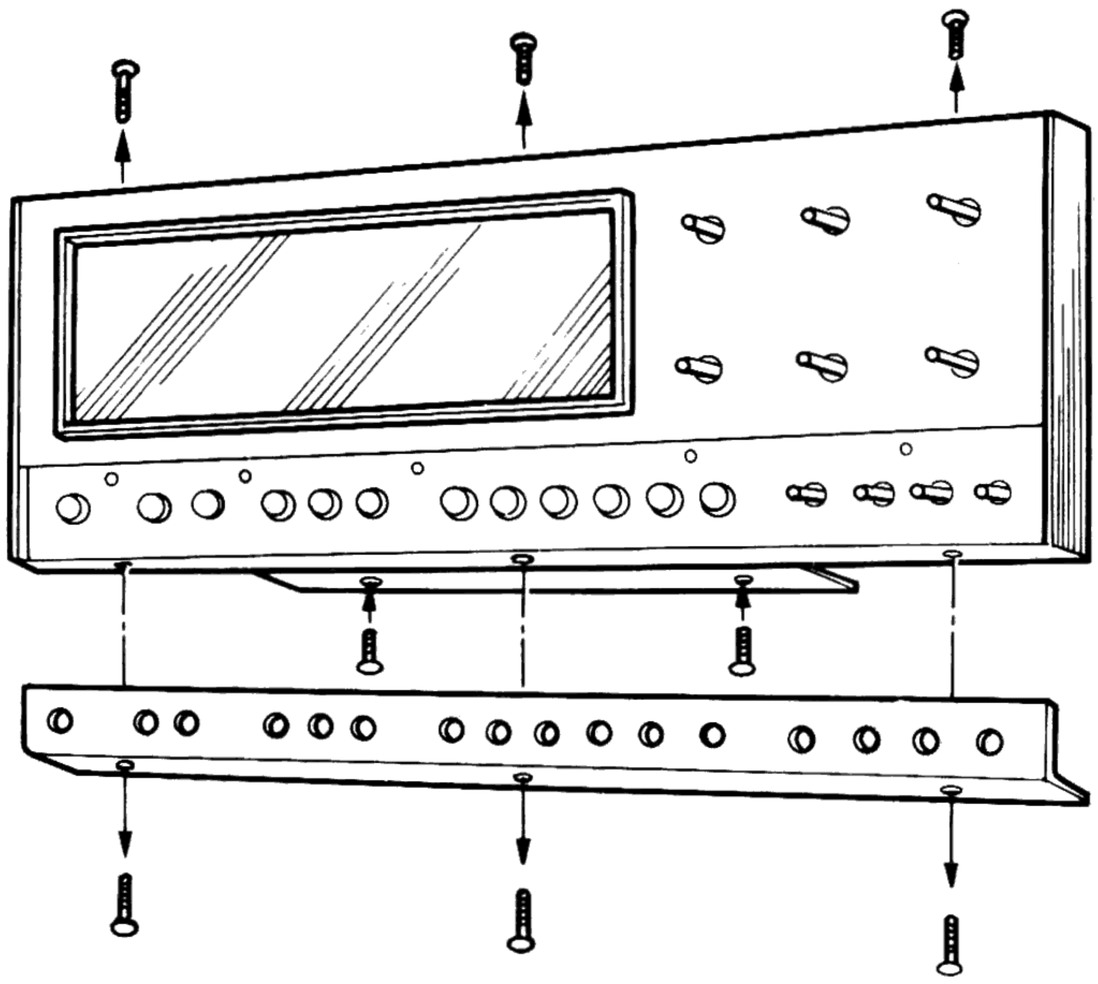

Pin assembly connecting to pilot lamp pc board is pulled out as figure. Forced pull breaks off the pc board and pin assembly. Do it carefully.

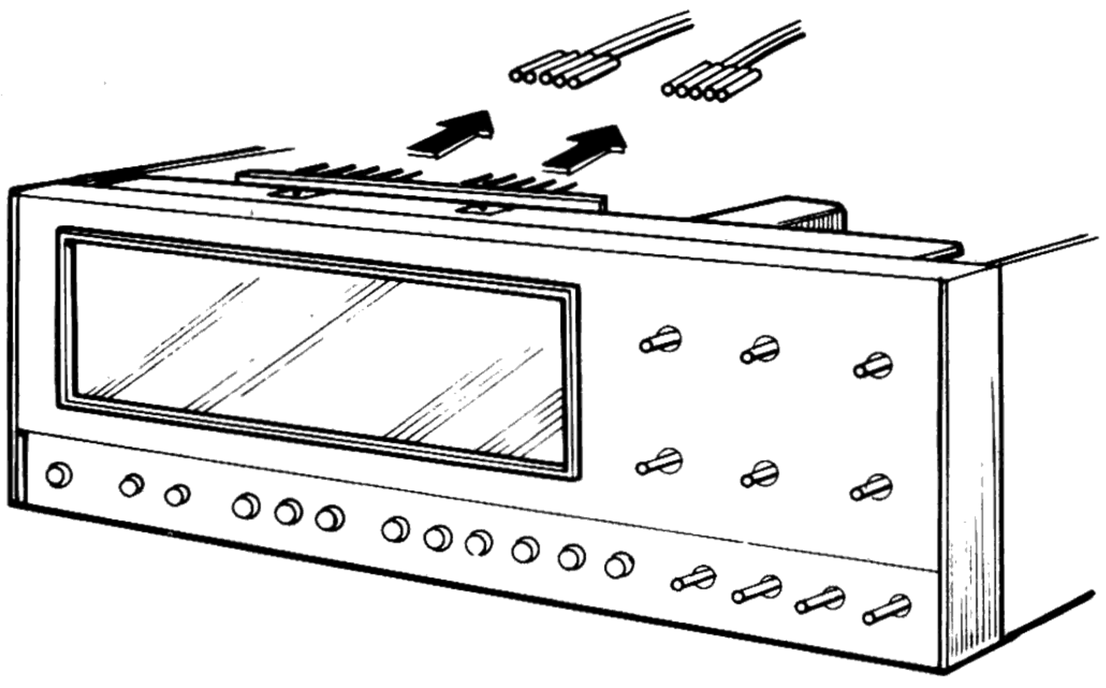

Dial back board block is fixed by 3 screws. Before remove screws from chassis take off the dial cord from small pulley.

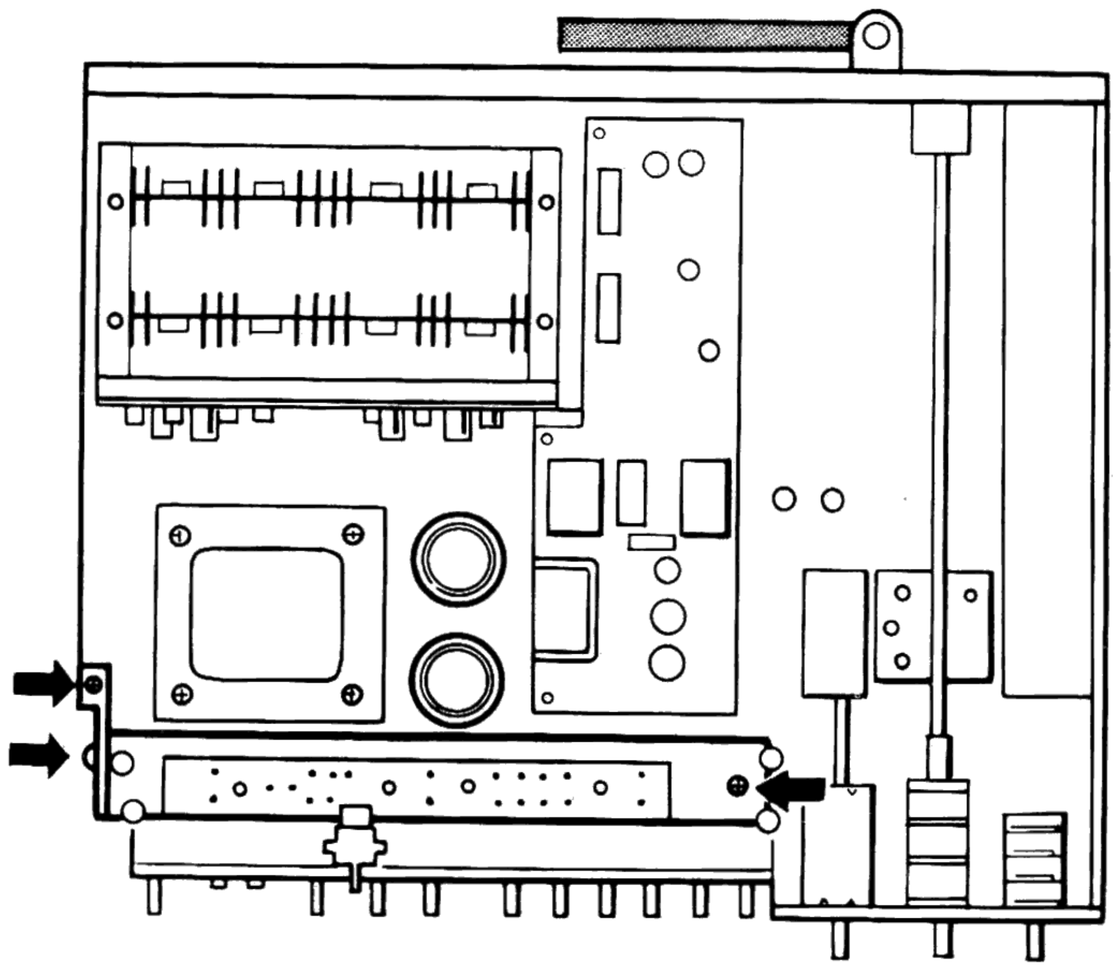

Raise the dial back board block when check the push-button pc board.

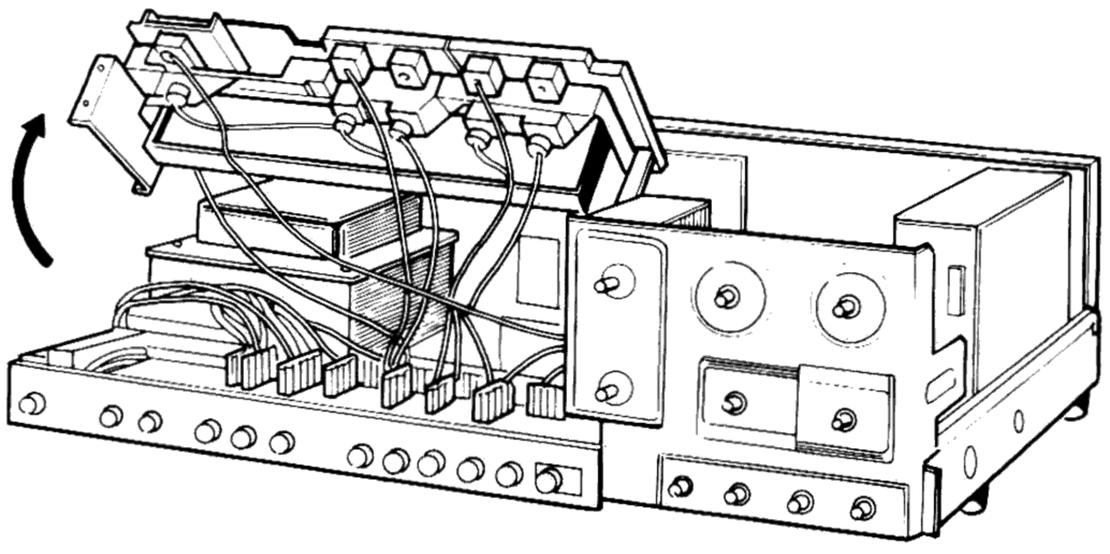

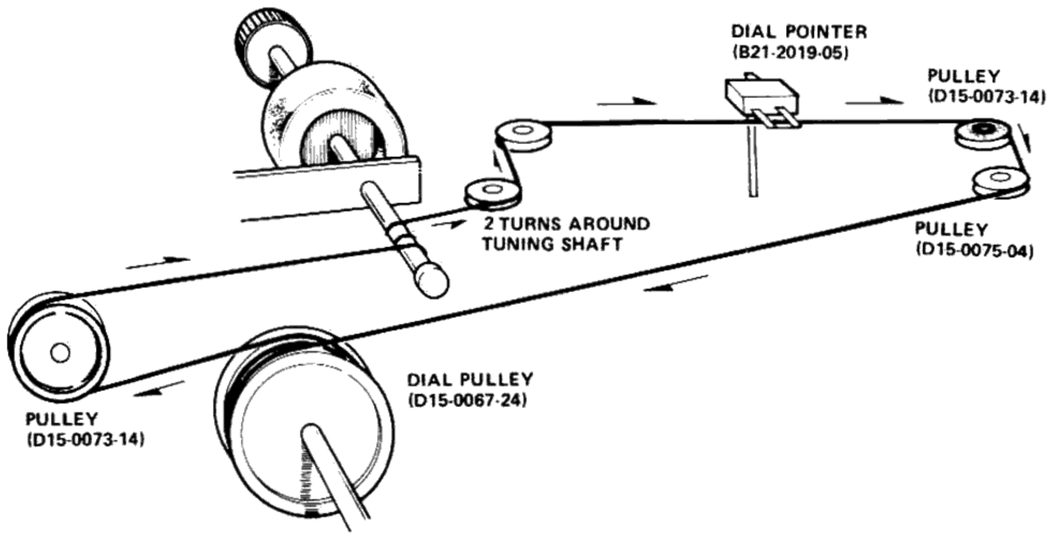

▲ DIAL CORD STRINGING

MODE	input jack (1KHz, 200mV)	output level (2V/8Ω = 0 dB)
RM	AUX Lch	L_F R_F −7.7±1.5dB L_R 0±1.5dB R_R −7.7±1.5dB
	AUX Rch	L_F −7.7±1.5dB R_F L_R −7.7±1.5dB R_R 0±1.5dB

▲ Table 1

www.hifiengine.com

DISASSEMBLY FOR ADJUSTMENTS

Main amp block (main amp unit and heat sink) is fixed by 4 screws. Remove them, take out main amp block.

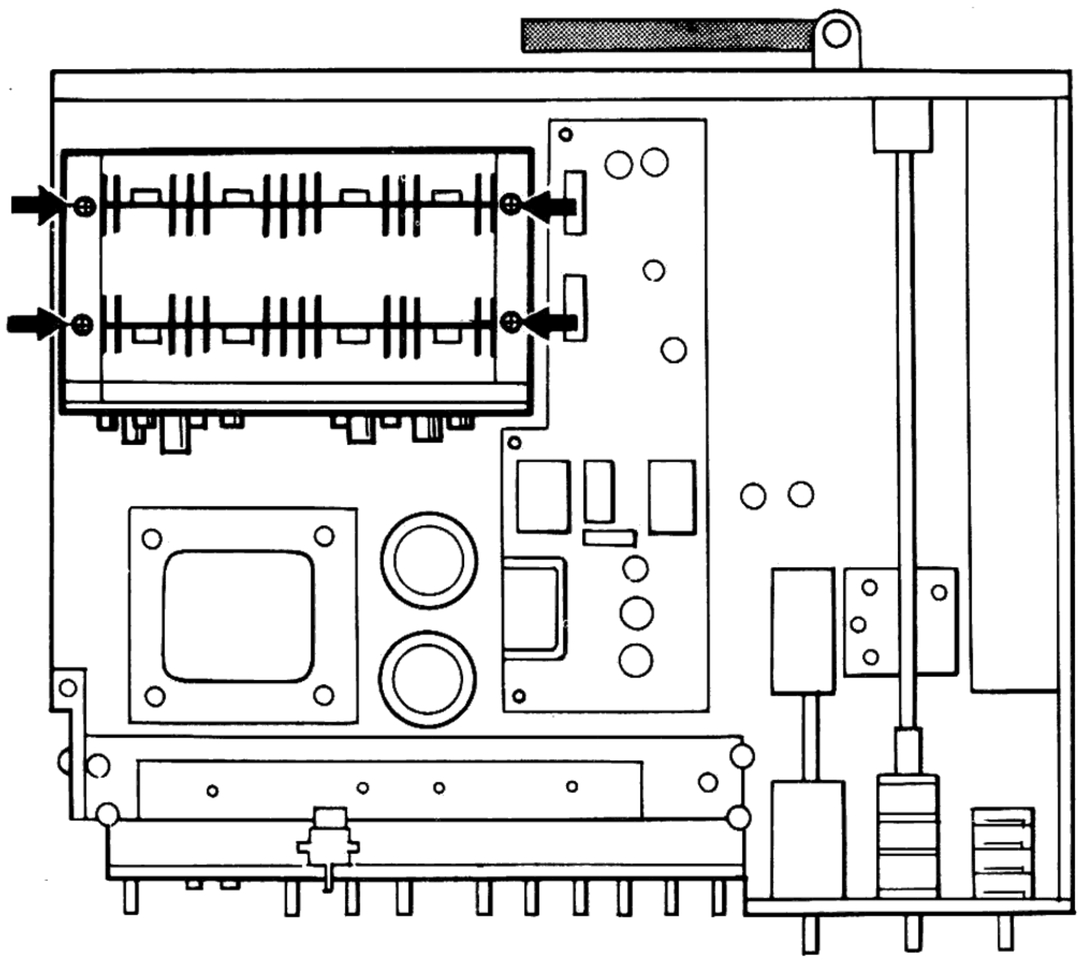

Power supply unit (X00-1370-10) has 2 fuses. When replace them, remove 3 screws on the protection unit (X13-1560-10) and turn the pc board as figure.

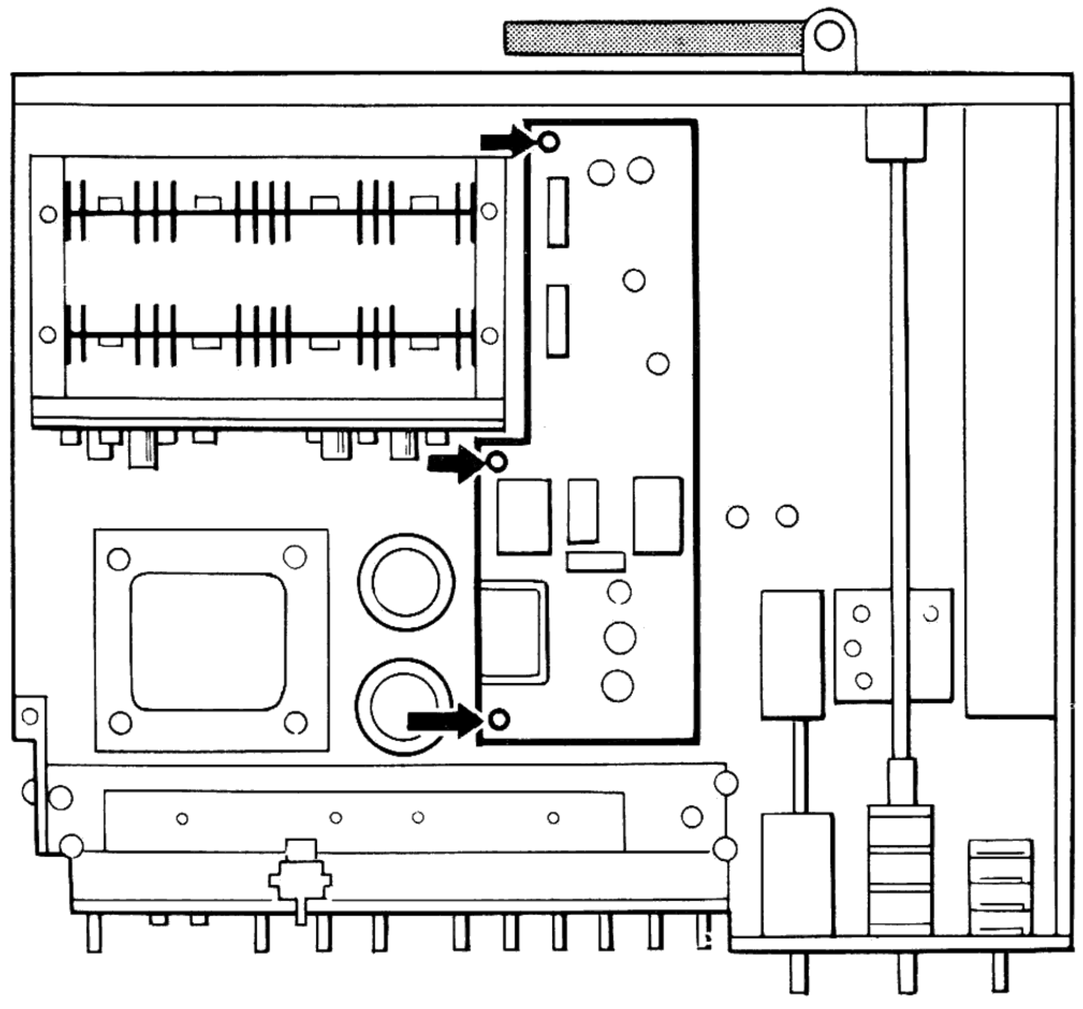

When check the pc board or power transistor remove 4 screws fixing the pc board.

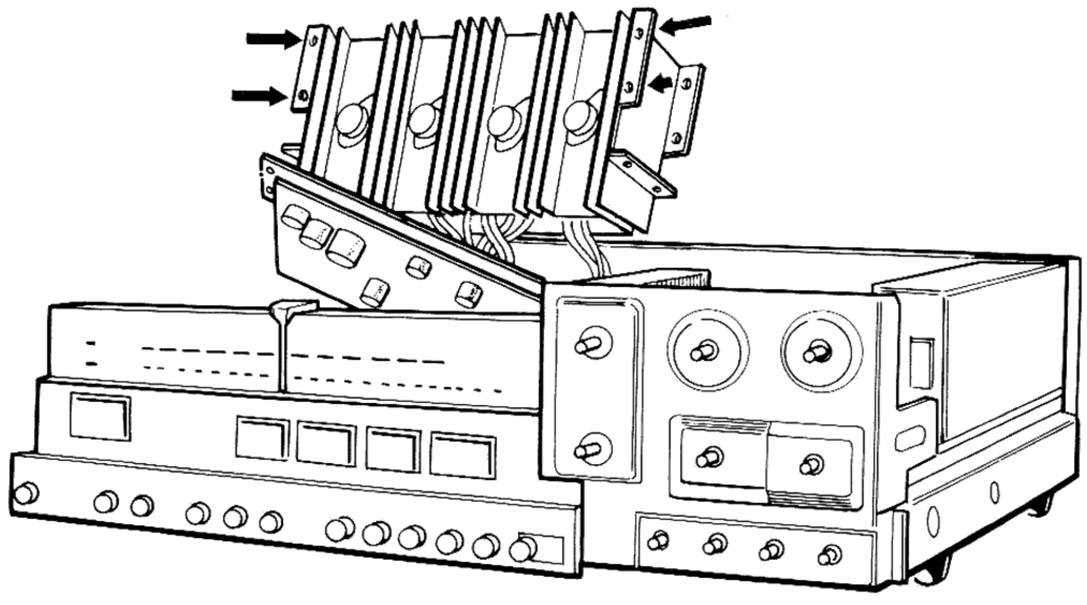

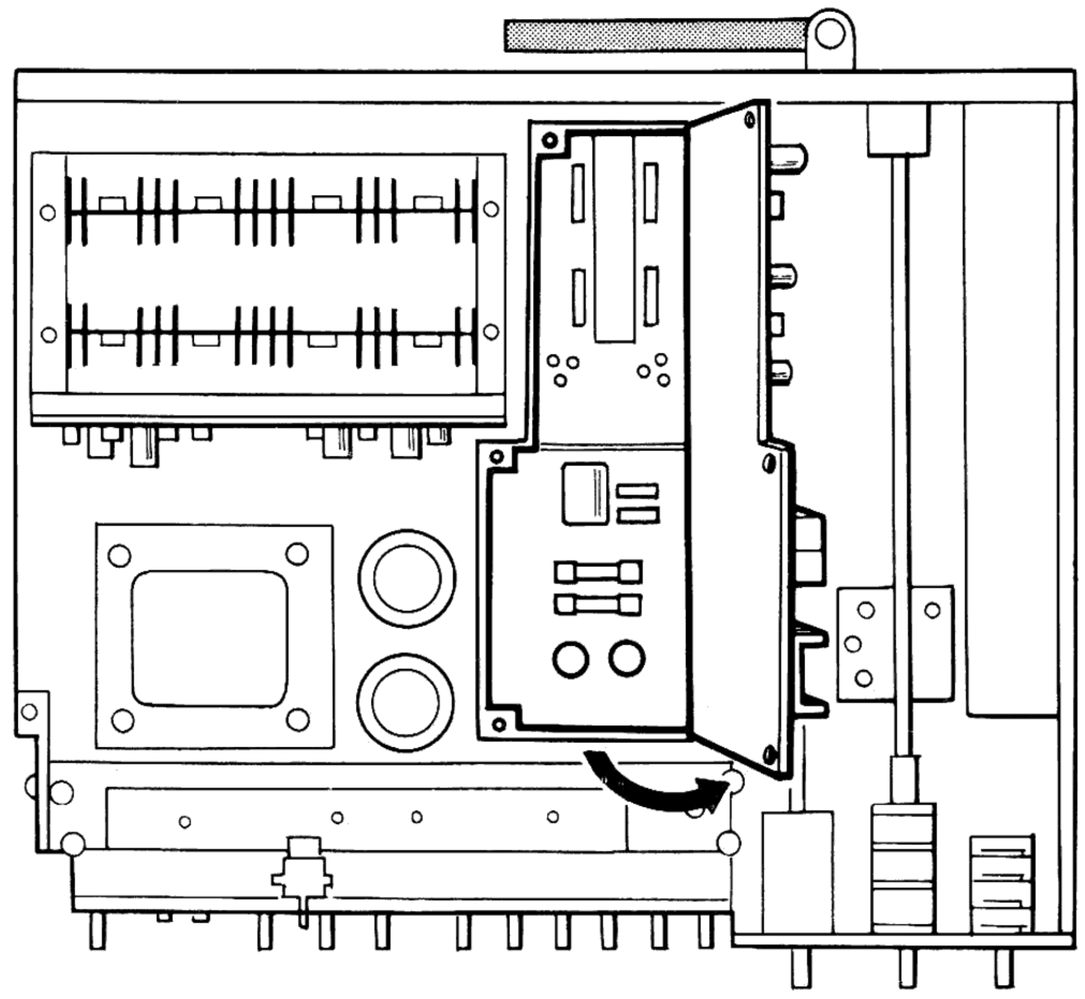

www.hifiengine.com

DISASSEMBLY FOR ADJUSTMENTS

Remove the 6 screws on the pc board mounting hardware, when check the TUNER unit.

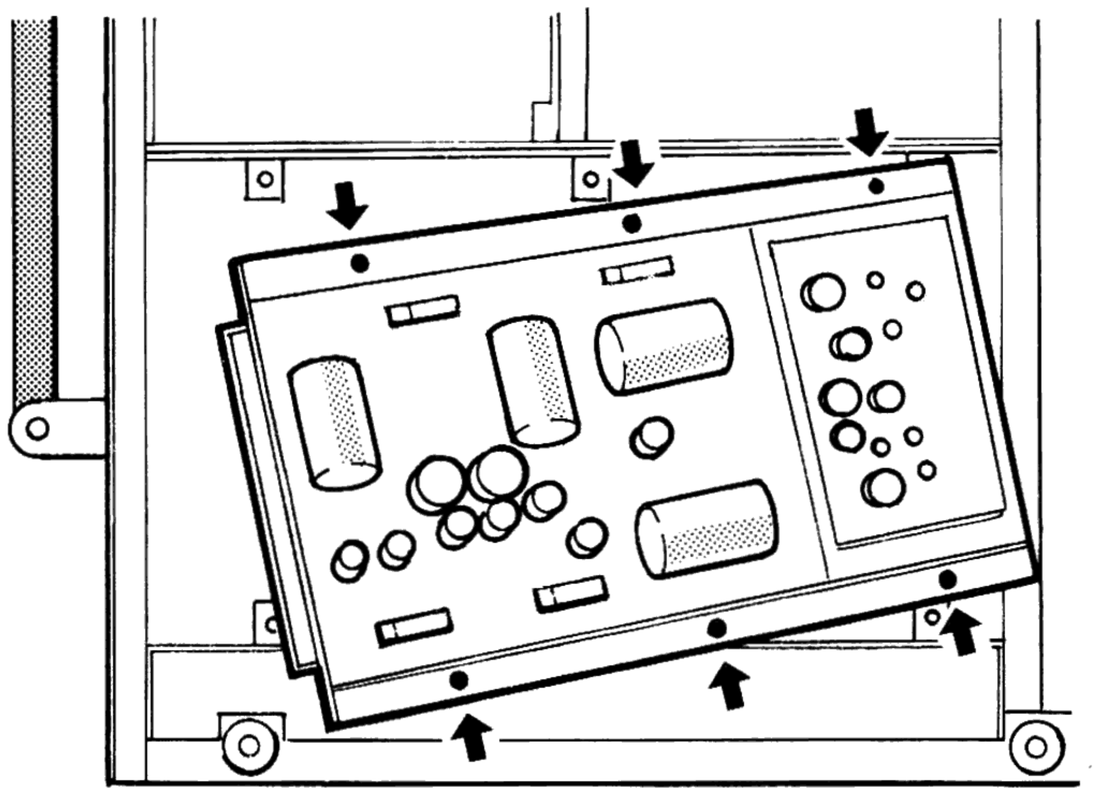

When take off the tone amp unit remove screws of right side. And then pulling the sub panel forward, take out the tone amp unit.

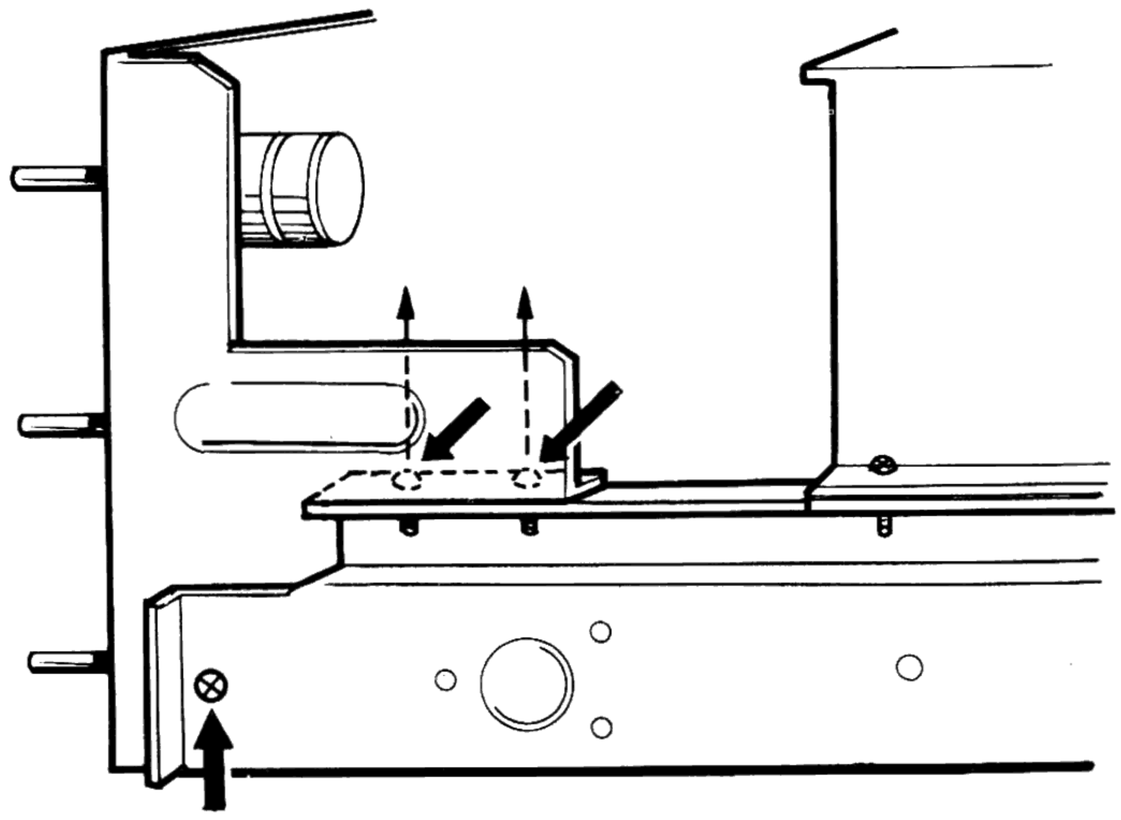

Remove the 4 screws on the pc board respectively, when check the power supply unit and the preamp unit.

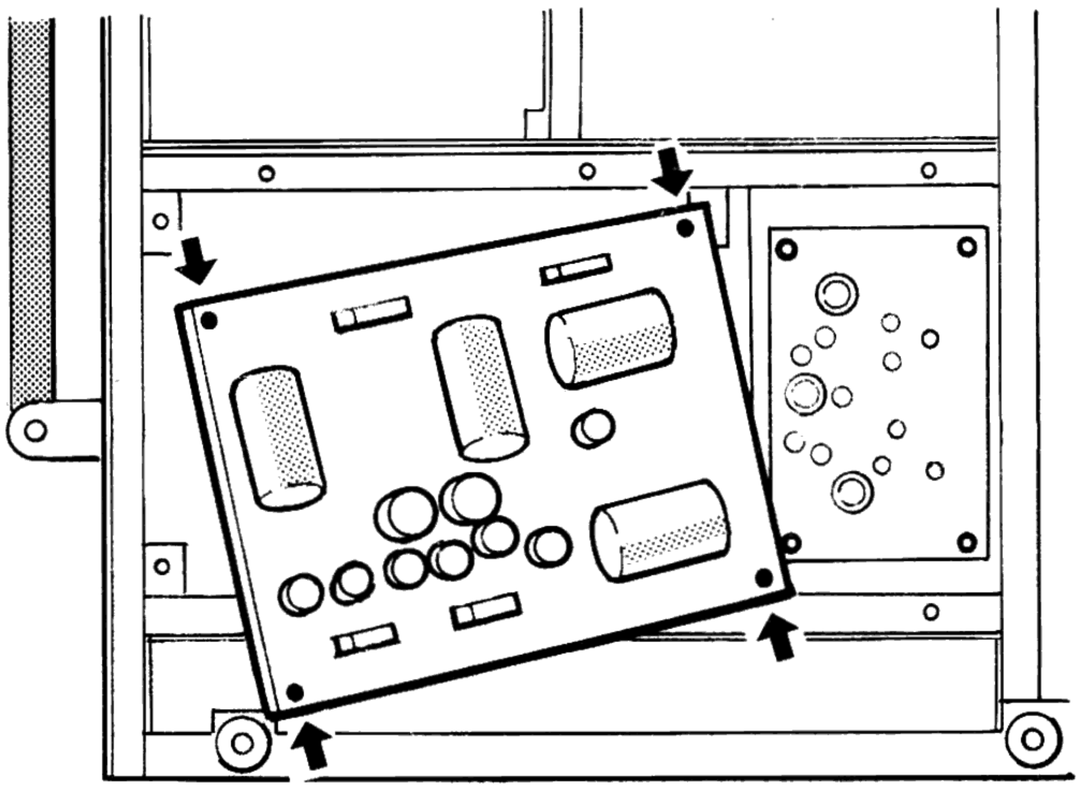

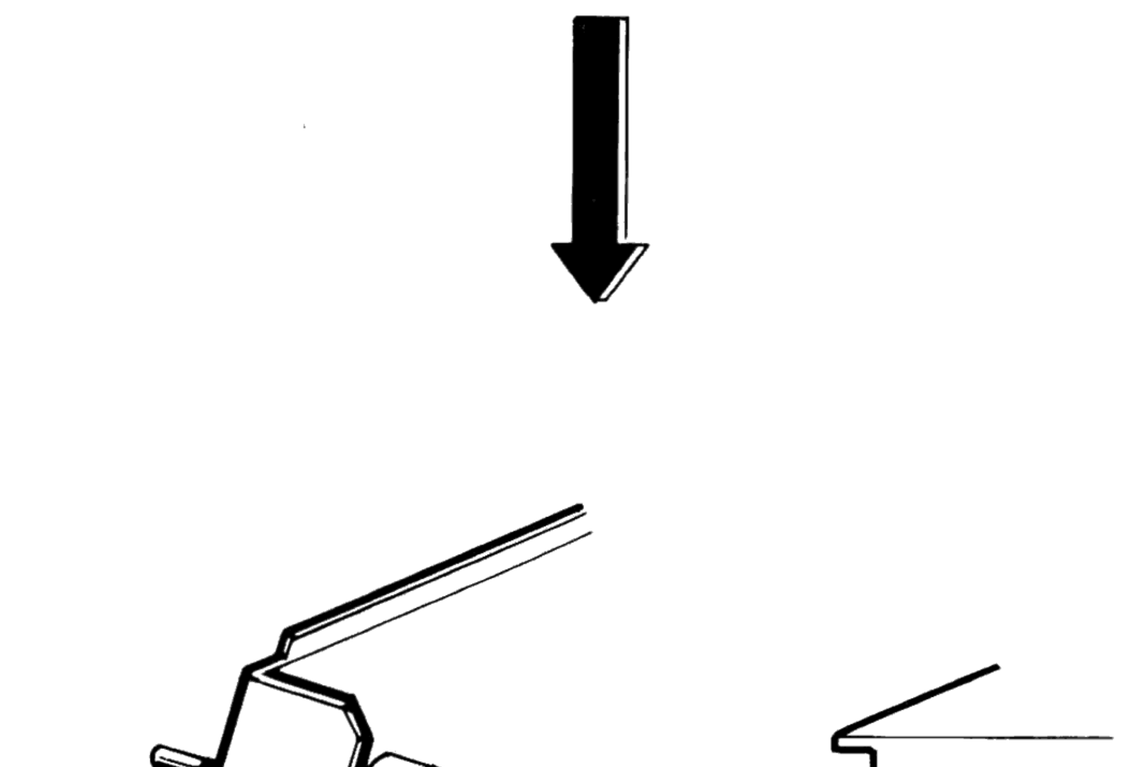

www.hifiengine.com

TROUBLESHOOTING

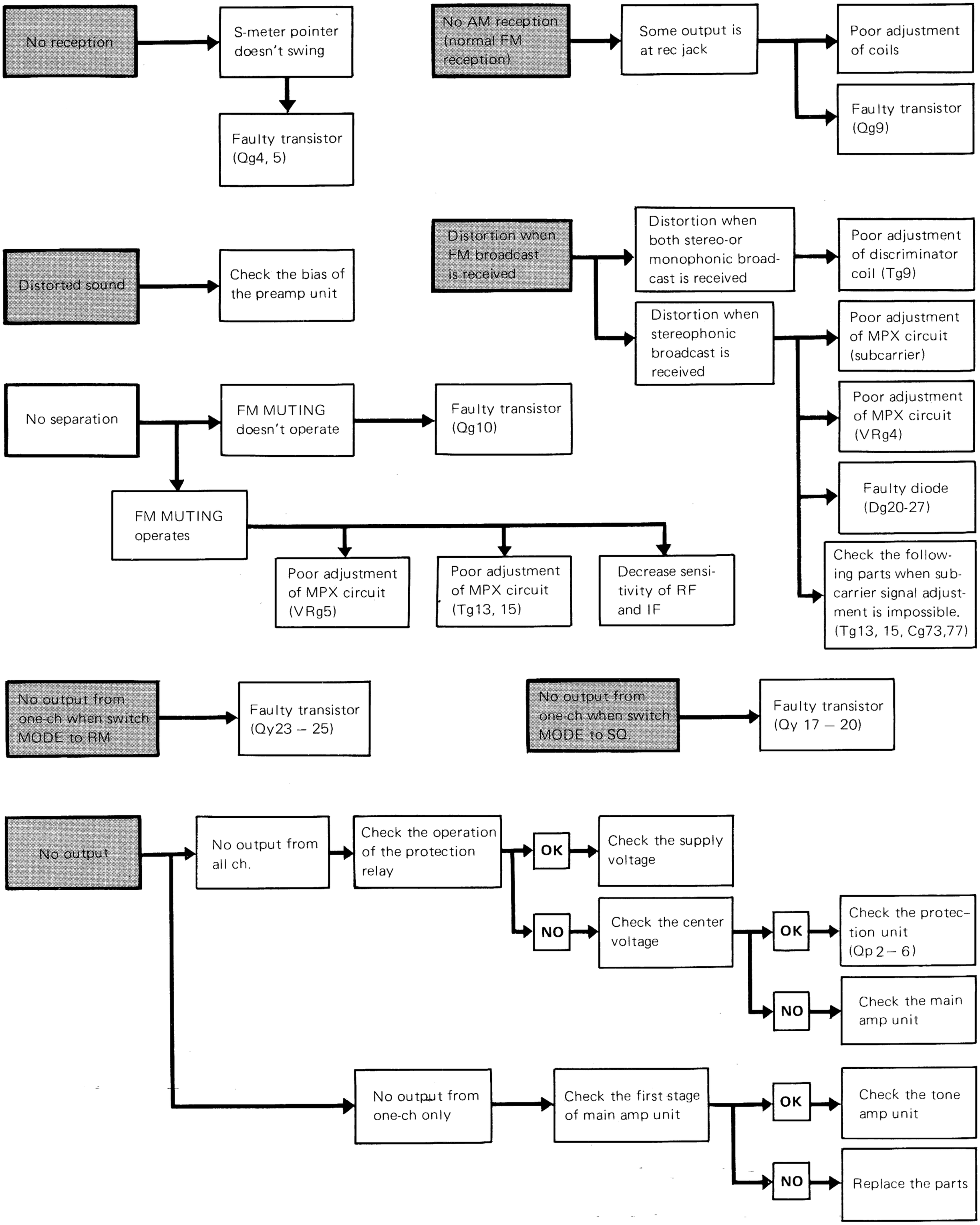

www.hifiengine.com

TROUBLESHOOTING

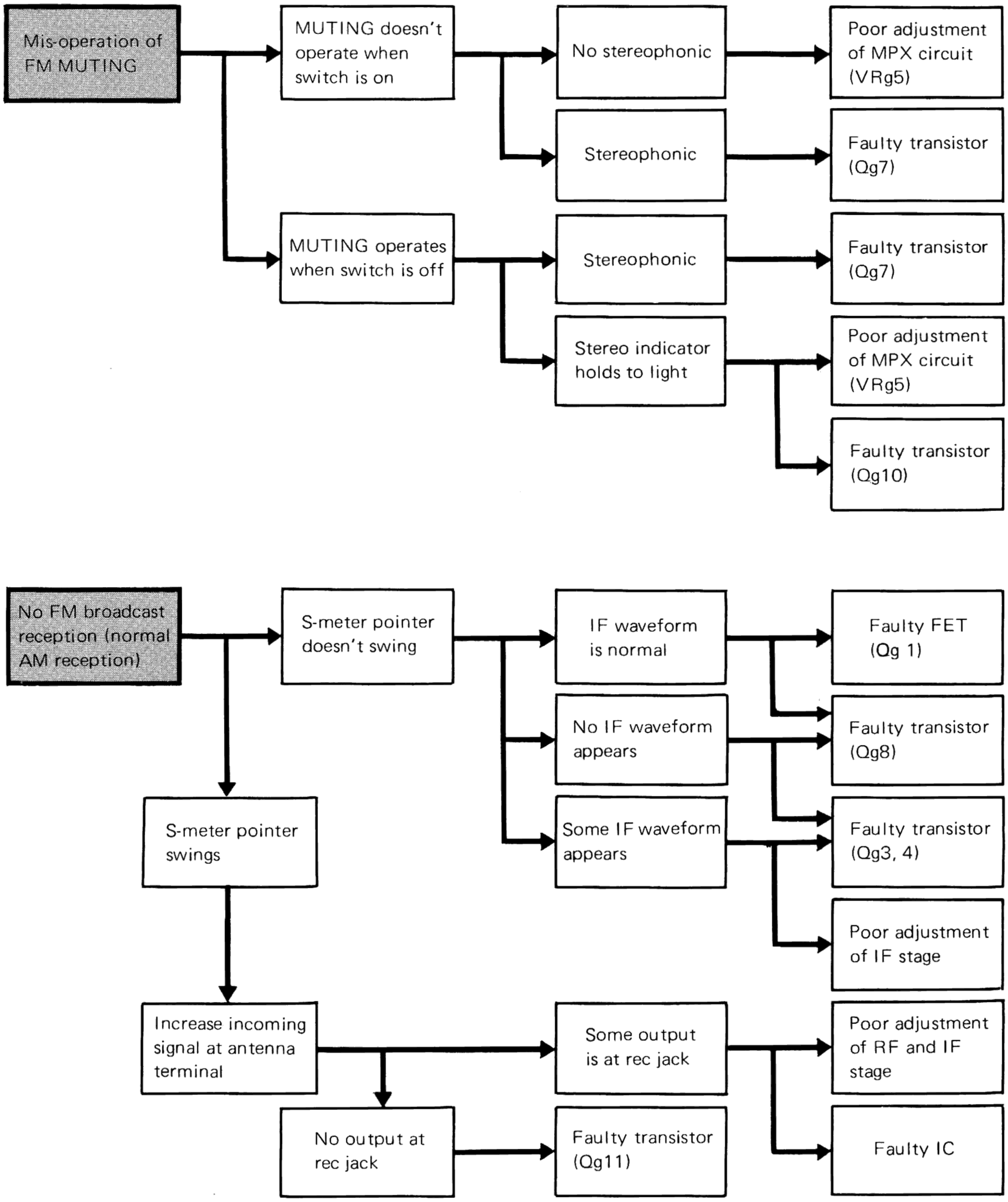

www.hifiengine.com

PARTS LIST

TOTAL PARTS LIST

Ref. No.	Parts No.	Description	Re-marks
—	A01-0217-12	Case	
—	A13-0069-01	Frame ass'y	
—	A13-0070-01	Frame (A)	
—	A13-0071-02	Frame (B)	
—	A13-0072-03	Frame (C)	
—	A33-0024-03	Reflector	
—	A40-0122-02	Bottom plate	
—	B07-0102-04	Push Switch Ring (pushbutton)	
—	B07-0103-04	Push Switch Ring (pushbutton)	
—	B07-0104-04	Push Switch Ring (pushbutton)	
—	B21-2019-05	Dial pointer ass'y	
—	B23-3007-14	Indication acryl board	
—	B58-0172-04	Volatile matter caution card	
—	D01-0009-15	Flywheel	
—	D20-0099-13	Dial shaft ass'y	
—	F19-0150-03	Wooden side board (L)	
—	F19-0151-03	Wooden side board (R)	
—	J02-0049-14	Leg x 4	
—	J30-0101-04	Spacer (for leg) x 4	
—	K23-0102-03	Knob (TONE) x 4	
—	K23-0133-04	Knob (Balance outside) (KR-8840)	
—	K23-0154-03	Knob (MODE, BALANCE) x 4 (KR-9940)	
—	K23-0154-03	Knob (MODE, BALANCE) x 2 (KR-8840)	
—	K23-0157-03	Knob (TUNING)	
—	K23-0158-03	Knob (SELECTOR, VOLUME) x2	
—	K23-0159-03	Knob (Balance inside) (KR-8840)	
—	K29-0190-04	Knob (pushbutton switch) x 9	
—	K29-0192-04	Knob (POWER)	
—	T90-0002-05	FM indoor antenna	
PANEL ASS'Y SECTION			
—	A20-0907-01	Panel (KR-9940)	
—	A20-0909-01	Panel (KR-8840)	
—	A48-0016-05	Panel side plate x 2	
—	B01-0079-03	Panel escutcheon	
—	J19-0363-03	Dress plate	
—	J19-0364-03	Front glass holder	
DIAL BACK BOARD SECTION			
—	A30-0081-12	Dial back board	
—	B19-0153-04	White filter	
—	B20-0288-23	Dial calibrations	
—	B31-0167-05	VU meter x 2	
—	B31-0171-05	T.S. meter ass'y (KR-9940)	
—	B31-0162-05	Signal meter	
—	B31-0170-05	Tuning meter (KR-9940)	
C107	CE04W0F221	Electrolytic 220μF 3.15WV	
C108～111	CE04W1H010	Electrolytic 1μF 50WV	
—	D15-0073-14	Pulley (29φ)	
—	D15-0075-04	Pulley (14φ) x 3	
—	F30-0024-14	Reinforce plate	
—	J19-0365-14	Dial calibrations stopper	
—	J19-0366-03	Meter stopper (KR-8840)	
—	J19-0371-03	Meter stopper (KR-9940)	
REAR PANEL SECTION			
—	B42-0009-04	Passed sticker	
C301	CQ93M1H273J	Mylar 0.027μF ±5%	
—	CK45F1E403Z	Ceramic 0.04μF +80%,−20%	
—	E06-0501-05	DIN connector socket x 2	
—	E11-0051-05	Phone jack (MIC)	
—	E13-0104-05	Pin jack (1P)	
—	E13-0804-05	Pin jack (8P) x 3	
—	E20-0402-15	Terminal strips (4P)	
—	E21-0138-15	GND terminal	
—	E21-0802-05	Push terminal (8P) x2	
—	E90-0022-05	Shield cap x 2	
—	F19-0137-03	CD-4 cover cap	
—	J21-0806-14	Antenna mounting hardware	
—	L19-0009-05	Balun transformer	
R301,302	PD14BY2E104J	Carbon 100kΩ ±5% 1/4W	
R303,304	PD14BY2E394J	Carbon 390kΩ ±5% 1/4W	
R305,306	PD14BY2E104J	Carbon 100kΩ ±5% 1/4W	
R307,308	PD14BY2E394J	Carbon 390kΩ ±5% 1/4W	
R309	PD14BY2E153J	Carbon 15kΩ ±5% 1/4W	
—	T90-0026-05	Ferrite antenna	
POWER SUPPLY SECTION			
C101,102	C90-0189-05	Electrolytic 1500μF 50WV	
C104,105	CP02B2J103M	Oil filled 0.01μF ±20%	
R102	RC05GF2H330J	Carbon 33Ω ±5% 1/2W	
D101		S4B-01	
—	J20-0263-33	Power transformer mounting plate	
—	W01-0063-00	CD-4 record	
—	X13-1570-11	Pushbutton switch unit	
—	X15-1120-06	CD4 unit (KR-9940)	
—	X90-1150-10	Main amp unit ass'y (KR-9940)	
—	X90-1150-11	Main amp unit ass'y (KR-8840)	
—	H10-0985-02	Polystyrene foamed fixture	
—	H10-0986-12	Polystyrene foamed fixture	
—	H10-0987-12	Polystyrene foamed fixture	
—	H10-0988-12	Polystyrene foamed fixture	
—	H10-1031-04	Buffer fixture	
—	H10-1028-04	Carton board	
—	H25-0078-00	Polyethylene bag	
—	H20-0373-04	Polyethylene cover	

www.hifiengine.com

DESTINATION LIST

Ref. No.	U.S.A. (K)	Canada (P)	PX (U)	Australia (X)	Europe (W)	Scandinavia (L)	England (T)	Other area (M)	AUDIO CLUB (W_2)	Description
—	A21-0203-02	A21-0203-02	A21-0203-02	A21-0203-02	A21-0203-02	A21-0203-02	A21-0203-02	A21-0203-02	A21-0157-12	Dress panel
—	A70-0080-05	A70-0080-05	A70-0071-05	A70-0071-05	A70-0071-05	A70-0071-05	A70-0071-05	A70-0071-05	A70-0071-05	Pilot lamp ass'y
—	B42-0359-04x2	B42-0359-04	—	—	—	—	—	—	—	UL caution card
—	B42-0517-04	B42-0517-04	—	—	—	—	—	—	—	Fuse caution card (KR-9940)
—	B42-0552-04	B42-0552-04	—	—	—	—	—	—	—	Fuse caution card (KR-8840)
—	B46-0002-00	B46-0021-00	B46-0022-00	—	—	—	—	—	—	Warranty card
—	—	—	B46-0023-00	—	—	—	—	—	—	Warranty card
—	B50-1292-00	B50-1292-00	B50-1292-00	B50-1292-00	B50-1292-00	B50-1292-00	B50-1294-00	B50-1292-00	B50-1343-00	Instruction Manual (KR-9940)
—	B50-1295-00	B50-1295-00	B50-1295-00	B50-1295-00	B50-1295-00	B50-1295-00	B50-1296-00	B50-1295-00	B50-1344-00	Instruction Manual (KR-8840)
—	B50-1042-00	B50-1042-00	B50-1042-00	B50-1042-00	B50-1042-00	B50-1042-00	B50-1057-00	B50-1042-00	B50-1042-00	Instruction Manual (KCD-2)
—	B52-0176-00	B52-0176-00	B52-0176-00	B52-0176-00	B52-0176-00	B52-0176-00	B52-0176-00	B52-0176-00	B52-0184-00	Schematic diagram (KR-9940)
—	B52-0177-00	B52-0177-00	B52-0177-00	B52-0177-00	B52-0177-00	B52-0177-00	B52-0177-00	B52-0177-00	B52-0185-00	Schematic diagram (KR-8840)
—	B58-0043-00	B58-0043-00	—	—	—	—	—	—	—	Carton case caution card
—	—	—	B58-0139-00	B58-0003-00	B58-0156-00	—	B58-0003-00	B58-0003-00	B58-0156-00	Power supply caution card
—	—	—	B58-0146-00	B58-0108-00	B58-0108-00	—	B58-0108-00	B58-0108-00	B58-0108-00	Spare fuse caution card
—	—	—	B58-0144-00	B58-0101-00	B58-0157-00	—	B58-0101-00	B58-0101-00	B58-0157-00	Power voltage selector caution card
—	—	—	—	—	B58-0176-00	B58-0176-00	—	—	B58-0176-00	DE-EMPHASIS caution card
—	—	—	B59-0018-00	—	—	—	—	—	—	KENWOOD servicestation's list
					PANEL ASS'Y					
—	A20-0892-11	A20-0892-11	A20-0892-11	A20-0892-11	A20-0892-11	A20-0892-11	A20-0893-11	A20-0892-11	A20-0937-01	Panel ass'y (KR-9940)
—	A20-0894-11	A20-0894-11	A20-0894-11	A20-0894-11	A20-0894-11	A20-0894-11	A20-0895-11	A20-0894-11	A20-0938-01	Panel ass'y (KR-8840)
—	B10-0172-04	B10-0172-04	B10-0172-04	B10-0172-04	B10-0172-04	B10-0172-04	B10-0173-04	B10-0172-04	B10-0180-04	Front glass (KR-9940)
—	B10-0174-04	B10-0174-04	B10-0174-04	B10-0174-04	B10-0174-04	B10-0174-04	B10-0175-04	B10-0174-04	B10-0181-04	Front glass (KR-8840)
					DIAL BACK BOARD SECTION					
—	A70-0082-05	A70-0082-05	A70-0074-05	A70-0074-05	A70-0074-05	A70-0074-05	A70-0074-05	A70-0074-05	A70-0074-05	Pilot lamp ass'y
					REAR PANEL SECTION					
—	A23-0552-02	A23-0552-02	A23-0553-02	A23-0554-02	A23-0555-02	A23-0556-02	A23-0554-02	A23-0553-02	A23-0555-02	Rear panel (KR-9940)
—	A23-0557-02	A23-0557-01	A23-0558-02	A23-0559-02	A23-0560-02	A23-0561-02	A23-0559-02	A23-0558-02	A23-0560-02	Rear panel (KR-8840)
—	B40-1127-04	B40-1128-04	B40-1129-04	B40-1130-04	B40-1132-04	B40-1133-04	B40-1131-04	B40-1130-04	B40-1199-04	Model name plate (KR-9940)
—	B40-1134-04	B40-1135-04	B40-1136-04	B40-1137-04	B40-1139-04	B40-1140-04	B40-1138-04	B40-1137-04	B40-1200-04	Model name plate (KR-8840)
—	—	—	—	—	B42-0024-04	—	—	—	—	SEV sticker
—	—	—	—	—	CQ93M1H272J	CQ93M1H272J	— —	—	CQ93M1H272J	Mylar 0.0027μF ±5%
—	—	—	D32-0075-04	D32-0075-04	D32-0075-04	—	D32-0075-04	D32-0075-04	D32-0075-04	Switch stopper
—	E08-0221-05	E08-0221-05	E08-0221-05	E08-0221-05	E08-0221-05	—	E08-0221-05	E08-0221-05	E08-0221-05	AC outlet x 3
—	E30-0181-05	E30-0181-05	E30-0034-05	E30-0185-05	E30-0176-05	E30-0292-05	040-0304-05	E30-0034-05	E30-0176-05	Power cord

www.hifiengine.com

Ref. No.	U.S.A. (K)	Canada (P)	PX (U)	Australia (X)	Europe (W)	Scandinavia (L)	England (T)	Other area (M)	AUDIO CLUB (W_2)	Description
—	F05-4026-05	F05-4026-05	—	—	—	—	—	—	—	Fuse (4A) (KR-9940)
—	—	—	F05-3523-05	F05-3523-05	F05-3522-05	F05-3522-05	F05-3523-05	F05-3523-05	F05-3522-05	Fuse (3.5A) (KR-9940)
—	—	—	F05-7025-05	F05-7025-05	—	—	F05-7025-05	F05-7025-05	—	Fuse (7A) (KR-9940)
—	—	—	—	—	F05-8024-05	—	—	—	F05-8024-05	Fuse (8A) (KR-9940)
—	F05-6025-05	F05-6025-05	F05-6021-05	F05-6021-05	—	—	F05-6021-05	F05-6021-05	—	Fuse (6A) (KR-8840)
—	—	—	—	—	F05-6321-05	—	—	—	F05-6321-05	Fuse (6.3AT) (KR-8840)
—	—	—	F05-3022-05	F05-3022-05	—	—	F05-3022-05	F05-3022-05	—	Fuse (3.5A) (KR-8840)
—	—	—	—	—	F05-3121-05	F05-3121-05	—	—	F05-3121-05	Fuse (3.15AT) (KR-8840)
—	—	—	J13-0033-15	J13-0033-15	J13-0031-05	J13-0031-05	J13-0033-15	J13-0033-15	J13-0031-05	Fuse holder
—	J30-0112-04	—	—	—	—	—	—	—	—	Spacer x 3
—	J41-0034-05	J41-0034-05	J41-0034-05	J41-0024-15	J41-0017-05	J41-0017-05	J41-0024-05	J41-0034-05	J41-0017-05	Power cord bushing
—	—	—	S31-2001-05	S31-2001-05	S31-2001-05	—	S31-2001-05	S31-2001-05	S31-2001-05	Power voltage selector switch
—	—	—	—	—	S31-2007-05	S31-2007-05	—	—	S31-2007-05	DE-EMPHASIS switch
					POWER SUPPLY SECTION					
—	C90-0145-05 x 2	C90-0145-05 x 2	CK45E3D103 PMU x 2	CK45E3D103 PMU x 2	CK45E3D103 PMU x 3	CK45E3D103 PMU x 3	CK45E3D103 PMU x 2	CK45E3D103 PMU x 2	CK45E3D103 PMU x 3	Ceramic 0.01μF +100% −0%
—	—	F09-0033-05 x 2	F09-0033-05 x 2	—	F09-0033-05 x 3	F09-0033-05 x 3	—	—	F09-0033-05 x 3	Capacitor cap
—	L04-0075-05	L04-0075-05	L03-0109-05	L03-0109-05	L09-0148-03	L09-0149-05	L03-0109-05	L03-0109-05	L09-0148-05	Power transformer (KR-9940)
—	L04-0076-05	L04-0076-05	L03-0110-05	L03-0110-05	L09-0150-05	L09-0151-05	L03-0110-05	L03-0110-05	L09-0150-05	Power transformer (KR-8840)
—	RC05GF2H225K	RC05GF2H225K	—	—	—	—	—	—	—	Carbon 2.2MΩ ±10% 1/2W
S12	S40-2037-05	S40-2037-05	S40-2046-05	S40-2046-05	S40-2046-05	S40-2046-05	S40-2046-05	S40-2046-05	S40-2046-05	Push button switch (POWER)
—	X90-1160-10	X90-1160-10	X90-1160-10	X90-1160-10	X90-1160-61	X90-1160-61	X90-1160-10	X90-1160-10	X90-1160-61	Sub unit ass'y
—	X90-1170-10	X90-1170-10	X90-1170-10	X90-1170-10	X90-1170-61	X90-1170-61	X90-1170-61	X90-1170-10	X90-1170-61	Tuner & preamp (KR-9940)
—	X90-1180-10	X90-1180-10	X90-1180-10	X90-1180-10	X90-1180-61	X90-1180-61	X90-1180-61	X90-1180-10	X90-1180-61	Tuner & preamp (KR-8840)
—	H01-1284-14	H01-1285-14	H01-1285-14	H01-1285-14	H01-1285-14	H01-1285-14	H01-1286-14	H01-1285-14	H01-1338-04	Carton case (KR-9940)
—	H01-1287-14	H01-1288-14	H01-1288-14	H01-1288-14	H01-1288-14	H01-1288-14	H01-1289-14	H01-1288-14	H01-1339-04	Carton case (KR-8840)
—	—	H03-0392-14	—	H03-0392-14	H03-0392-14	H03-0392-14	H03-0393-14	H03-0392-14	H03-0412-04	Carton case (KR-9940)
—	—	H03-0394-14	—	H03-0394-14	H03-0394-14	H03-0394-14	H03-0395-14	H03-0394-14	H03-0413-04	Carton case (KR-8840)
—	H25-0029-04	H25-0029-04	H25-0029-04 x 2	H25-0029-04 x 2	H25-0029-04 x 2	H25-0029-04	H25-0029-04 x 2	H25-0029-04 x 2	H25-0029-04 x 2	Polyethylene bag

www.hifiengine.com

PARTS LIST

MAIN AMP ASSEMBLY (X90-1150-10)

Ref. No.	Parts No.	Description	Re-marks
		CAPACITOR	
C1, 2	CQ93M1H104K	Mylar 0.1μF ±10%	
		RESISTOR	
R9~16	R92-0115-05	Wire wound 0.47Ω ±10% 3W	
		SEMICONDUCTOR	
Q1 ~8	V04-0045-05	Transistor 2SD287	
D1 ~4	V11-0076-05	Diode 1S1555	
D5 ~8	V21-0012-05	Varistor STV-3H	
		MISCELLANEOUS	
—	E02-0209-05	Transistor socket x 8	
—	E19-0401-05	Pin assembly (4P) x 4	
—	E19-0602-05	Pin assembly (6P) x 2	
—	F01-0163-03	Heat sink x 2	
—	F19-0135-03	Heat-proof sheet	
—	F20-0066-05	Mica plate x 8	
—	J20-0260-04	Heat sink side plate x 2	
—	J20-0261-03	Main pc board mounting hardware	
—	J21-0387-04	Dial calibrations holder x 3	
—	J25-0952-03	PC board (A)	
—	J25-0953-13	PC board (B)	
—	X07-1230-13	Main amp unit	-11
—	X07-1230-14	Main amp unit	-10

SUB UNIT ASSEMBLY (X90-1160-10)

Ref. No.	Parts No.	Description	Re-marks
		CAPACITOR	
C106	CE04W1J221	Electrolytic 220μF 63WV	
		MISCELLANEOUS	
—	B42-0439-04	Caution sticker	
—	E30-0198-05	PC board connection cord (black)	
—	E30-0199-05	PC board connection cord (red)	
—	E30-0200-05	PC board connection cord (yellow)	
—	E30-0202-05	PC board connection cord (blue)	
—	J21-1335-03	PC board mounting hardware	
—			
—	X00-1370-10	Power supply	-10
—	X00-1370-61	Power supply	-61
—	X13-1560-10	Power supply/protection	

TUNER & PREAMP ASSEMBLY (X90-1170-10/X90-1180-10)

Ref. No.	Parts No.	Description	Re-marks
		CAPACITOR	
C201	CQ93M1H104K	Mylar 0.1μF ±10%	
C202	CE04W1C100	Electrolytic 10μF 16WV	
C203 ~ 206	CC45SL1H221K	Ceramic 220pF ±10%	
		RESISTOR	
R201,202	PD14BY2E101J	Carbon 100Ω ±5% 1/4W	
R203 ~ 206	PD14BY2E223J	Carbon 22kΩ ±5% 1/4W	
R207,208	PD14BY2E103J	Carbon 10kΩ ±5% 1/4W	
R209	PD14BY2E330J	Carbon 33Ω ±5% 1/4W	
		POTENTIOMETER (X90-1170-10) KR-9940	
VR1	R08-5025-05	Potentiometer 200kΩ (W) dual BALANCE	
VR2,3	R03-5024-05	Potentiometer 200kΩ (W) BALANCE	
VR4	R11-5011-05	Potentiometer 100kΩ (B) x 4 VOLUME	
		POTENTIOMETER (X90-1180-10) KR-8840	
VR1	R08-5025-05	Potentiometer 200kΩ (W) dual BALANCE	
VR2	R08-5024-05	Potentiometer 200kΩ (W) dual BALANCE	
VR3	R11-5011-05	Potentiometer 100kΩ (B) x 4 VOLUME	
		SWITCH	
S1	S01-6003-05	Rotary (SELECTOR)	
S2	S01-4021-05	Rotary (MODE)	
		MISCELLANEOUS	
—	A10-0431-21	Chassis	
—	A22-0137-02	Sub panel (X90-1170-10, -61)	
—	A22-0138-02	Sub panel (X90-1180-10, -61)	
—	D15-0067-34	Pulley	
—	D15-0073-14	Pulley (mid)	
—	G01-0044-14	Dial spring	
—	J21-1336-03	PC board mounting hardware (A) (POWER SUPPLY)	
—	J21-1337-13	PC board mounting hardware (B) (SQ/RM)	
—	J21-1338-04	Connector mounting hardware	
—	X00-1590-10	Power supply unit	
—	X05-1080-15	Tuner unit (X90-1170-10, X90-1180-10)	
—	X05-1080-65	Tuner unit (X90-1170-61, X90-1180-61)	
—	X08-1180-00	Preamp unit	
—	X11-1130-00	Tone amp unit x2	
—	X15-1170-00	SQ/RM unit	

www.hifiengine.com

PARTS LIST

POWER SUPPLY (X00-1370-10)

Ref. No.	Parts No.	Description	Remarks
		CAPACITOR	
Cr1, 2	CE04W1C471	Electrolytic 470μF 16WV	
Cr3 ~6	CK45E2H103P	Ceramic 0.01μF +100%,—0%	
Cr7	CE04W1H010	Electrolytic 1μF 50WV	
		RESISTOR	
Rr1	PD14BY2E103J	Carbon 10kΩ ±5% 1/4W	
		SEMICONDUCTOR	
Dr1, 2	V11-0252-05	Diode SIRB-10	
Dr3, 4	V11-0295-05	Diode W06B	
Dr5	V11-0219-05	Diode V06B	
Dr6	V11-0254-05	Zener diode YZ-140	
		MISCELLANEOUS	
—	E19-0602-05	Pin assembly	
F1	F05-4026-05	Fuse (4A, UL)	-10
F1	F05-4024-05	Fuse (4A, SEMKO)	-61
F2	F06-2022-05	Fuse (2A, UL)	-10
F2	F05-2029-05	Fuse (2A, SEMKO)	-61
—	J13-0032-05	Fuse holder x 2	-61

POWER SUPPLY (X00-1590-10)

Ref. No.	Parts No.	Description	Remarks
		CAPACITOR	
Ck1	CE02W1J102	Electrolytic 1000μF 63WV	
Ck2	CE04W1E101	Electrolytic 100μF 25WV	
Ck3	CE04W1H010	Electrolytic 1μF 50WV	
Ck4	CE04W1E100	Electrolytic 10μF 25WV	
Ck5	CE02W1H102	Electrolytic 1000μF 50WV	
Ck6	CK45F1H103Z	Ceramic 0.01μF +80%,—20%	
Ck7	CE04W1V4R7	Electrolytic 4.7μF 35WV	
Ck8, 9	CK45E2H103P	Ceramic 0.01μF +100%,—0%	
Ck10,11	CE02W1H102	Electrolytic 1000μF 50WV	
Ck12,13	CE04W1V331	Electrolytic 330μF 35WV	
Ck14,15	CE04W1A221	Electrolytic 220μF 10WV	
Ck16~19	CE04W1C101	Electrolytic 100μF 16WV	
		RESISTOR	
Rk1	PD14BY2E392J	Carbon 3.9kΩ ±5% 1/4W	
Rk2	PD14BY2E472J	Carbon 4.7kΩ ±5% 1/4W	
Rk3	PD14BY2E394J	Carbon 390kΩ ±5% 1/4W	
Rk4	PD14BY2E472J	Carbon 4.7kΩ ±5% 1/4W	
Rk5	PD14BY2E153J	Carbon 15kΩ ±5% 1/4W	
Rk6	PD14BY2E822J	Carbon 8.2kΩ ±5% 1/4W	
Rk7	RN14AB3D4R7JB	Metal film 4.7Ω ±5% 2W	
Rk8	RC05GF2H561K	Carbon 560Ω ±10% 1/2W	
Rk9,10	RN14AB3A121JB	Metal film 120Ω ±5% 1W	
Rk11~14	PD14BY2E471J	Carbon 470Ω ±5% 1/4W	
Rk15	PD14BY2E680J	Carbon 68Ω ±5% 1/4W	
Rk16	PD14BY2E820J	Carbon 82Ω ±5% 1/4W	
Rk17,18	PD14BY2E102J	Carbon 1kΩ ±5% 1/4W	
		SEMICONDUCTOR	
Qk1	V03-0330-05	Transistor 2SC 789 (O) or (R)	
Qk2, 3	V03-0279-05	Transistor 2SC1000 (BL)	
Qk4	V03-0344-05	Transistor 2SC 1419 (B) or (C)	
Qk5	V01-0116-05	Transistor 2SA 755 (B) or (C)	
Dk1~3	V11-0254-05	Zener diode YZ-140	
Dk4	V11-0252-05	Diode S1RB-10	
		MISCELLANEOUS	
—	F01-0162-04	Heat sink x 2	
	F01-0188-04	Heat sink	

TUNER (X05-1080-15)

Ref. No.	Parts No.	Description	Remarks
		CAPACITOR	
Cg1	CC45SL1H150K	Ceramic 15pF ±10%	
Cg2	CC45SL1H101K	Ceramic 100pF ±10%	
Cg3	CK45F1H103Z	Ceramic 0.01μF +80%,-20%	
Cg4	CC45SL1H030C	Ceramic 3pF ±0.25pF	
Cg5,6	CK45F1H103Z	Ceramic 0.01μF +80%,-20%	
Cg7	CC45SL1H180K	Ceramic 18pF ±10%	
Cg8	CC45SL1H270K	Ceramic 27pF ±10%	
Cg9	CC45SL1H100D	Ceramic 10pF ±0.5pF	
Cg10	CC45SL1H221K	Ceramic 220pF ±10%	
Cg11	CK45F1H103Z	Ceramic 0.01μF +80%,-20%	
Cg12	CC45SL1H100D	Ceramic 10pF ±0.5pF	
Cg13	CC45TH1H020C	Ceramic 2pF ±0.25pF	
Cg14	CK45F1H223Z	Ceramic 0.022μF +80%,-20%	
Cg15	CC45SG1H220K	Ceramic 22pF ±10%	
Cg16	CC45SG1H470K	Ceramic 47pF ±10%	
Cg17	CC45SG1H220K	Ceramic 22pF ±10%	
Cg18	CC45TH1H150K	Ceramic 15pF ±10%	
Cg19~26	CK45F1H223Z	Ceramic 0.022μF +80%,-20%	
Cg27,28	CM93D1H102J(Z)	Mica 1000pF ±5%	
Cg32	CC45SL1H050D	Ceramic 5pF ±0.5pF	
Cg33	CQ93M1H223K	Mylar 0.022μF ±10%	
Cg34	CQ93M1H102K	Mylar 0.001μF ±10%	
Cg35	CK45F1H223Z	Ceramic 0.022μF +80%,-20%	
Cg36	CK45F1H103Z	Ceramic 0.01μF +80%,-20%	
Cg37	CQ93M1H102K	Mylar 0.001μF ±10%	
Cg38	CK45F1H223Z	Ceramic 0.022μF +80%,-20%	
Cg39	CQ93M1H472J	Mylar 0.0047μF ±5%	
Cg40	CC45SL1H050D	Ceramic 5pF ±0.5pF	
Cg41	CK45B1H471K	Ceramic 470pF ±10%	
Cg42~44	CK45F1H223Z	Ceramic 0.022μF +80%,-20%	
Cg45,46	CC45SL1H221K	Ceramic 220pF ±10%	
Cg47	CE04W1E100	Electrolytic 10μF 25WV	
Cg48	CK45F1H223Z	Ceramic 0.022μF +80%,-20%	
Cg49	CE04W1C101	Electrolytic 100μF 16WV	
Cg50	CC45SL1H101K	Ceramic 100pF ±10%	
Cg52,53	CQ93M1H103K	Mylar 0.01μF ±10%	
Cg54	CE04W1H3R3	Electrolytic 3.3μF 50WV	
Cg56	CK45F1H223Z	Ceramic 0.022μF +80%,-20%	
Cg58	CE04W1E100	Electrolytic 10μF 25WV	
Cg59~62	CK45F1H223Z	Ceramic 0.022μF +80%,-20%	
Cg63	CQ93M1H223K	Mylar 0.022μF ±10%	
Cg64	CQ93M1H472J	Mylar 0.0047μF ±5%	
Cg65,66	CQ93M1H103K	Mylar 0.01μF ±10%	
Cg67	CQ09S1H361J	Polystyrene 360pF ±5%	
Cg68	CC45SL1H180K	Ceramic 18pF ±10%	
Cg69	CE04W1E100	Electrolytic 10μF 25WV	

www.hifiengine.com

PARTS LIST

Ref. No.	Parts No.	Description	Re-marks
Cg70	CM93D1H391J(Z)	Mica 390pF ±5%	
Cg71	CE04W1H010	Electrolytic 1μF 50WV	
Cg72	CQ93M1H223K	Mylar 0.022μF ±10%	
Cg73	CQ08S1H472J	Polystyrene 0.0047μF ±5%	
Cg75	CQ93M1H822J	Mylar 0.0082μF ±5%	
Cg76	CE04W1H010	Electrolytic 1μF 50WV	
Cg77	CQ08S1H472J	Polystyrene 0.0047μF ±5%	
Cg78	CE04W1E100	Electrolytic 10μF 25WV	
Cg79	CE04W0J470	Electrolytic 47μF 6.3WV	
Cg80	CS04E1ER47M	Tantalum 0.47μF 25WV	
Cg81,82	CQ93M1H682J	Mylar 0.0068μF ±5%	-15
	CQ93M1H472J	Mylar 0.0047μF ±5%	-65
Cg83	CS04E1ER47M	Tantalum 0.47μF 25WV	
Cg85	CQ93M1H223K	Mylar 0.022μF ±10%	
Cg86,87	CQ08S1H102J	Polystyrene 0.001μF ±5%	
Cg88	CS04E1ER22M	Tantalum 0.22μF 25WV	
VC	C01-0172-05	Variable capacitor	
CTg1	C05-0009-15	Ceramic trimmer (6pF)	
RESISTOR			
Rg1	PD14BY2B104J	Carbon 100kΩ ±5% 1/8W	
Rg2	PD14BY2B330J	Carbon 33Ω ±5% 1/8W	
Rg3	PD14BY2B471J	Carbon 470Ω ±5% 1/8W	
Rg4	PD14BY2B104J	Carbon 100kΩ ±5% 1/8W	
Rg5	PD14BY2B562J	Carbon 5.6kΩ ±5% 1/8W	
Rg6	PD14BY2B472J	Carbon 4.7kΩ ±5% 1/8W	
Rg7	PD14BY2B223J	Carbon 22kΩ ±5% 1/8W	
Rg8	PD14BY2B102J	Carbon 1kΩ ±5% 1/8W	
Rg9	PD14BY2B562J	Carbon 5.6kΩ ±5% 1/8W	
Rg10	PD14BY2B392J	Carbon 3.9kΩ ±5% 1/8W	
Rg11	PD14BY2B223J	Carbon 22kΩ ±5% 1/8W	
Rg12	PD14BY2B391J	Carbon 390Ω ±5% 1/8W	
Rg13	PD14BY2B331J	Carbon 330Ω ±5% 1/8W	
Rg14	PD14BY2B102J	Carbon 1kΩ ±5% 1/8W	
Rg15	PD14BY2B391J	Carbon 390Ω ±5% 1/8W	
Rg16	PD14BY2B393J	Carbon 39kΩ ±5% 1/8W	
Rg17	PD14BY2B103J	Carbon 10kΩ ±5% 1/8W	
Rg18	PD14BY2B223J	Carbon 22kΩ ±5% 1/8W	
Rg19	PD14BY2B332J	Carbon 3.3kΩ ±5% 1/8W	
Rg20	PD14BY2B221J	Carbon 220Ω ±5% 1/8W	
Rg21,22	PD14BY2B102J	Carbon 1kΩ ±5% 1/8W	
Rg23	PD14BY2B222J	Carbon 2.2kΩ ±5% 1/8W	
Rg24	PD14BY2B223J	Carbon 22kΩ ±5% 1/8W	
Rg25	PD14BY2B562J	Carbon 5.6kΩ ±5% 1/8W	
Rg26	PD14BY2B183J	Carbon 18kΩ ±5% 1/8W	
Rg29	PD14BY2B470J	Carbon 47Ω ±5% 1/8W	
Rg30,31	PD14BY2B561J	Carbon 560Ω ±5% 1/8W	
Rg32	PD14BY2B332J	Carbon 3.3kΩ ±5% 1/8W	
Rg33	PD14BY2B223J	Carbon 22kΩ ±5% 1/8W	
Rg34	PD14BY2B221J	Carbon 220Ω ±5% 1/8W	
Rg35	PD14BY2B562J	Carbon 5.6kΩ ±5% 1/8W	
Rg36	PD14BY2B561J	Carbon 560Ω ±5% 1/8W	
Rg37	PD14BY2B562J	Carbon 5.6kΩ ±5% 1/8W	
Rg38	PD14BY2B103J	Carbon 10kΩ ±5% 1/8W	
Rg39	PD14BY2B221J	Carbon 220Ω ±5% 1/8W	
Rg40	PD14BY2B103J	Carbon 10kΩ ±5% 1/8W	
Rg41,42	PD14BY2B333J	Carbon 33kΩ ±5% 1/8W	
Rg43,44	PD14BY2B222J	Carbon 2.2kΩ ±5% 1/8W	
Rg45,46	PD14BY2B682J	Carbon 6.8kΩ ±5% 1/8W	
Rg48	PD14BY2B102J	Carbon 1kΩ ±5% 1/8W	
Rg49,50	PD14BY2B221J	Carbon 220Ω ±5% 1/8W	
Rg51	PD14BY2B562J	Carbon 5.6kΩ ±5% 1/8W	
Rg52	PD14BY2B223J	Carbon 22kΩ ±5% 1/8W	
Rg53	PD14BY2B104J	Carbon 100kΩ ±5% 1/8W	
Rg54	PD14BY2B103J	Carbon 10kΩ ±5% 1/8W	

Ref. No.	Parts No.	Description	Re-marks
Rg55	PD14BY2B563J	Carbon 56kΩ ±5% 1/8W	
Rg56	PD14BY2B562J	Carbon 5.6kΩ ±5% 1/8W	
Rg57	PD14BY2B222J	Carbon 2.2kΩ ±5% 1/8W	
Rg58	PD14BY2B682J	Carbon 6.8kΩ ±5% 1/8W	
Rg59	PD14BY2B102J	Carbon 1kΩ ±5% 1/8W	
Rg60	PD14BY2B103J	Carbon 10kΩ ±5% 1/8W	
Rg61	PD14BY2B221J	Carbon 220Ω ±5% 1/8W	
Rg62	PD14BY2B473J	Carbon 47kΩ ±5% 1/8W	
Rg63	PD14BY2B103J	Carbon 10kΩ ±5% 1/8W	
Rg64	PD14BY2B221J	Carbon 220Ω ±5% 1/8W	
Rg65	PD14BY2B102J	Carbon 1kΩ ±5% 1/8W	
Rg66	PD14BY2B563J	Carbon 56kΩ ±5% 1/8W	
Rg67	PD14BY2B124J	Carbon 120kΩ ±5% 1/8W	
Rg68	PD14BY2B471J	Carbon 470Ω ±5% 1/8W	
Rg69	PD14BY2B330J	Carbon 33Ω ±5% 1/8W	
Rg70	PD14BY2B101J	Carbon 100Ω ±5% 1/8W	
Rg71	PD14BY2B102J	Carbon 1kΩ ±5% 1/8W	
Rg72	PD14BY2B101J	Carbon 100Ω ±5% 1/8W	
Rg74	PD14BY2B471J	Carbon 470Ω ±5% 1/8W	
Rg75	PD14BY2B222J	Carbon 2.2kΩ ±5% 1/8W	
Rg76	PD14BY2B330J	Carbon 33Ω ±5% 1/8W	
Rg77~84	PD14BY2B103J	Carbon 10kΩ ±5% 1/8W	
Rg85~87	PD14BY2B823J	Carbon 82kΩ ±5% 1/8W	
Rg89	PD14BY2B823J	Carbon 82kΩ ±5% 1/8W	
Rg90,91	PD14BY2B153J	Carbon 15kΩ ±5% 1/8W	
Rg92,93	PD14BY2B123J	Carbon 12kΩ ±5% 1/8W	-15
	PD14BY2B113J	Carbon 11kΩ ±5% 1/8W	-65
Rg101	PD14BY2B101J	Carbon 100Ω ±5% 1/8W	
SEMICONDUCTOR			
Qg1	V09-0012-05	FET 2SK19 (GR) or (BL)	
Qg2~4	V03-0091-05	Transistor 2SC381 (R)	
Qg5, 6	V03-0098-05	Transistor 2SC535 (B)	
Qg7	V03-0270-05	Transistor 2SC945 (Q) or (R)	
Qg8	V03-0136-05	Transistor 2SC785 (R)	
Qg9	V03-0079-05	Transistor 2SC460 (B)	
Qg10	V01-0084-05	Transistor 2SA733 (Q) or (R)	
Qg11,12	V03-0090-05	Transistor 2SC458 (D)	
Qg13	V03-0215-05	Transistor 2SC1213A (C)	
Qg14	V03-0079-05	Transistor 2SC460(B)	
ICg1	V30-0087-05	IC TA7060P	
Dg1, 2	V11-0051-05	Diode 1N60	
Dg3, 4	V11-0076-05	Diode 1S1555 or 1S2076	
Dg5~12	V11-0051-05	Diode 1N60	
Dg13	V11-0076-05	Diode 1S1555 or 1S2076	
Dg14~18	V11-0051-05	Diode 1N60	
Dg19	V11-0076-05	Diode 1S1555 or 1S2076	
Dg20~27	V11-0051-05	Diode 1N60	
Dg29,30	V21-0004-05	Varistor MV-13	
Zg1	V21-0006-05	Zener diode DZ-140	
TRANS/COIL/FILTER			
Tg1	L34-0405-05	FM-ANT coil	
Tg2	L34-0408-05	FM-RF coil	
Tg3	L34-0409-05	FM-OSC coil	
Tg4	L30-0176-05	FM-IFT	
Tg5	L30-0247-05	FM-IFT	
Tg6	L30-0250-05	AM-IFT	
Tg7	L30-0052-05	AM-IFT	
Tg8	L30-0248-05	FM-IFT	
Tg9	L30-0207-15	Discriminator coil	
Tg10	L30-0249-05	AM-IFT	
Tg11	L30-0082-05	AM-OSC coil	
Tg12	L35-0054-05	MPX coil	
Tg13	L35-0052-05	MPX coil	

www.hifiengine.com

PARTS LIST

Ref. No.	Parts No.	Description	Re-marks
Tg14	L35-0054-05	MPX coil	
Tg15	L35-0053-05	MPX coil	
Lg1	L40-1092-03	Ferri-inductor	
Lg2	L33-0027-04	Choke coil	
Lg3, 4	L33-0026-04	Choke coil	
Lg5	L40-1511-10	Ferri-inductor	
Lg6~9	L40-1092-03	Ferri-inductor	
Lg10,11	L40-1835-22	Ferri-inductor	
CFg1,2	L72-0014-05	Ceramic filter	
POTENTIOMETER			
VRg1	R12-2016-05	PC trimmer (AM-METER)5kΩ(B)	
VRg3	R12-3029-05	PC trimmer (FM-OUTPUT) 30kΩ (B)	
VRg4	R12-0047-05	PC trimmer (SEPARATION) 500Ω (B)	
VRg5	R12-4019-05	PC trimmer (BEACON) 50kΩ(B)	
MISCELLANEOUS			
—	F10-0279-14	Shield plate	
—	F10-0280-03	Shield plate	

MAIN AMP (X07-1230-13, 14)

Ref. No.	Parts No.	Description	Re-marks
CAPACITOR			
Ce1~4	CC45SL1H221K	Ceramic 220pF ±10%	
Ce5~8	CE04W1H010	Electrolytic 1μF 50WV	
Ce9~12	CE04W1E100	Electrolytic 10μF 25WV	
Ce17~20	CC45SL1H330K	Ceramic 33pF ±10%	
Ce21~24	CE04W1H470	Electrolytic 47μF 50WV	
Ce25~28	CE04W0J101	Electrolytic 100μF 6.3WV	
Ce33	CE04W1H010	Electrolytic 1μF 50WV	
Ce34	CE04W1H221	Electrolytic 220μF 50WV	
Ce43	CQ93M1H104M	Mylar 0.1μF ±20%	
RESISTOR			
Re1~4	PD14BY2E334J	Carbon 330kΩ ±5% 1/4W	
Re5~8	PD14BY2E562J	Carbon 5.6kΩ ±5% 1/4W	
Re9~12	PD14BY2E563J	Carbon 56kΩ ±5% 1/4W	
Re13~16	PD14BY2E153J	Carbon 15kΩ ±5% 1/4W	
Re17~20	PD14BY2E272J	Carbon 2.7kΩ ±5% 1/4W	
Re21~24	PD14BY2E222J	Carbon 2.2kΩ ±5% 1/4W	
Re25~28	PD14BY2E563J	Carbon 56kΩ ±5% 1/4W	
Re29~32	PD14BY2E101JB	Carbon 100Ω ±5% 1/4W	
Re33~36	RC05GF2H222K	Carbon 2.2kΩ ±10% 1/2W	
Re37~40	RC05GF2H472K	Carbon 4.7kΩ ±10% 1/2W	
Re41~44	PD14BY2E121JB	Carbon 120Ω ±5% 1/4W	
Re45~52	RN14AB3A331JB	Metal film 330Ω ±5% 1W	
Re53~56	PD14BY2E8R2JB	Carbon 8.2Ω ±5% 1/4W	
Re57~60	PD14BY2E822J	Carbon 8.2kΩ ±5% 1/4W	
Re61	PD14BY2E560JB	Carbon 56Ω ±5% 1/4W	
Re62	RC05FG2H222K	Carbon 2.2kΩ ±10% 1/2W	
SEMICONDUCTOR			
Qe1~8	V01-0087-05	Transistor 2SA620WL (4) or (5)	
Qe9~12	V03-0296-05	Transistor 2SC983 (O)	
Qe13~16	V04-0055-05	Transistor 2SD381 (L) or (M)	
Qe17~20	V02-0041-05	Transistor 2SB536 (L) or (M)	
De1	V11-0254-05	Zener diode YZ-140	
POTENTIOMETER			
VRe1~4	R12-0055-05	PC trimmer 200Ω (B) BIAS	

PREAMP (X08-1180-00)

Ref. No.	Parts No.	Description	Re-marks
CAPACITOR			
Cd1, 2	CS15E1C2R2M	Tantalum 2.2μF 16WV	
Cd3, 4	CC45SL1H330K	Ceramic 33pF ±10%	
Cd5, 6	CC45SL1H220K	Ceramic 22pF ±10%	
Cd7, 8	CE04W0J470	Electrolytic 47μF 6.3WV	
Cd9,10	CC45SL1H150K	Ceramic 15pF ±10%	
Cd11,12	CQ09S1H681J	Polystyrene 680pF ±5%	
Cd13,14	CQ93M1H222J	Mylar 0.0022μF ±5%	
Cd15,16	CE04W0J330	Electrolytic 33μF 6.3WV	
Cd17,18	CE04W1H100MBR	Electrolytic 10μF 50WV	
Cd19	CE04W1H470	Electrolytic 47μF 50WV	
Cd20	CE04W1C470	Electrolytic 47μF 16WV	
Cd21,22	CC45SL1H470K	Ceramic 47pF ±10%	
RESISTOR			
Rd1, 2	PD14BY2E222J	Carbon 2.2kΩ ±5% 1/4W	
Rd3, 4	PD14BY2E334J	Carbon 330kΩ ±5% 1/4W	
Rd5, 6	PD14BY2E224J	Carbon 220kΩ ±5% 1/4W	
Rd7, 8	PD14BY2E182J	Carbon 1.8kΩ ±5% 1/4W	
Rd9,10	PD14BY2E473J	Carbon 47kΩ ±5% 1/4W	
Rd11,12	PD14BY2E154J	Carbon 150kΩ ±5% 1/4W	
Rd13,14	PD14BY2E564J	Carbon 560kΩ ±5% 1/4W	
Rd15,16	PD14CY2E684J	Carbon 680kΩ ±5% 1/4W	
Rd17,18	PD14BY2E103J	Carbon 10kΩ ±5% 1/4W	
Rd19,20	PD14BY2E154J	Carbon 150kΩ ±5% 1/4W	
Rd21,22	PD14BY2E563J	Carbon 56kΩ ±5% 1/4W	
Rd23,24	PD14BY2E182J	Carbon 1.8kΩ ±5% 1/4W	
Rd25,26	PD14BY2E562J	Carbon 5.6kΩ ±5% 1/4W	
Rd27,28	PD14BY2E563J	Carbon 56kΩ ±5% 1/4W	
Rd29	PD14BY2E103J	Carbon 10kΩ ±5% 1/4W	
Rd30	PD14BY2E332J	Carbon 3.3kΩ ±5% 1/4W	
Rd31,32	PD14CY2E824J	Carbon 820kΩ ±5% 1/4W	
SEMICONDUCTOR			
Qd1~4	V03-0303-05	Transistor 2SC1416A (GR)	
Qd5, 6	V03-0358-05	Transistor 2SC1416 (GR)or(BL)	

TONE AMP (X11-1130-00)

Ref. No.	Parts No.	Description	Re-marks
CAPACITOR			
Ci1, 2	C90-0152-05	Tantalum 1μF 25WV	
Ci3, 4	CC45SL1H101K	Ceramic 100pF ±10%	
Ci5, 6	CE04W1E3R3MBR	Electrolytic 3.3μF 25WV	
Ci7, 8	CC45SL1H101K	Ceramic 100pF ±10%	
Ci9,10	CQ93M1H152J	Mylar 0.0015μF ±5%	
Ci11~14	CQ93M1H183J	Mylar 0.018μF ±5%	
Ci15,16	CE04W1E100	Electrolytic 10μF 25WV	
Ci17,18	CC45SL1H330K	Ceramic 33pF ±10%	
Ci19,20	CE04W1E3R3MBR	Electrolytic 3.3μF 25WV	
Ci21,22	CE04W0J470	Electrolytic 47μF 6.3WV	
Ci23	CE04W1H470	Electrolytic 47μF 50WV	
Ci25,26	CE04W1E3R3MBR	Electrolytic 3.3μF 25WV	
RESISTOR			
Ri1, 2	PD14CY2E222J	Carbon 2.2kΩ ±5% 1/4W	
Ri3, 4	PD14CY2E224J	Carbon 220kΩ ±5% 1/4W	
Ri5, 6	PD14CY2E154J	Carbon 150kΩ ±5% 1/4W	
Ri7, 8	PD14CY2E224J	Carbon 220kΩ ±5% 1/4W	
Ri9,10	PD14CY2E472J	Carbon 4.7kΩ ±5% 1/4W	

www.hifiengine.com

PARTS LIST

Ref. No.	Parts No.	Description	Re-marks
Ri11,12	PD14CY2E273J	Carbon 27kΩ ±5% 1/4W	
Ri13	PD14BY2E562J	Carbon 5.6kΩ ±5% 1/4W	
Ri14	PD14CY2E562J	Carbon 5.6kΩ ±5% 1/4W	
Ri15,16	PD14CY2E474J	Carbon 470kΩ ±5% 1/4W	
Ri17,18	PD14BY2E562J	Carbon 5.6kΩ ±5% 1/4W	
Ri19,20	PD14CY2E103J	Carbon 10kΩ ±5% 1/4W	
Ri21,22	PD14CY2E562J	Carbon 5.6kΩ ±5% 1/4W	
Ri23,24	PD14BY2E273J	Carbon 27kΩ ±5% 1/4W	
Ri25,26	PD14CY2E274J	Carbon 270kΩ ±5% 1/4W	
Ri27,28	PD14CY2E333J	Carbon 33kΩ ±5% 1/4W	
Ri29,30	PD14CY2E562J	Carbon 5.6kΩ ±5% 1/4W	
Ri31,32	PD14CY2E102J	Carbon 1kΩ ±5% 1/4W	
Ri33,34	PD14BY2E102J	Carbon 1kΩ ±5% 1/4W	
SEMICONDUCTOR			
Qi1~4	V03-0309-05	Transistor 2SC1345 (D) or (E)	
POTENTIOMETER			
VRi1,2	R06-5007-05	Potentiometer 100kΩ (B) dual	

POWER SUPPLY & PROTECTION (X13-1560-10)

Ref. No.	Parts No.	Description	Re-marks
CAPACITOR			
Cp1, 2	CE04W1A470NP	Electrolytic 47μF 10WV	
Cp3	CE04W1H100	Electrolytic 10μF 50WV	
Cp4	CE04W1V101	Electrolytic 100μF 35WV	
Cp5, 6	CK45F1H103Z	Ceramic 0.01μF +80%,–20%	
Cp7, 8	CE04W1V221	Electrolytic 220μF 35WV	
Cp9	CE04W1H221	Electrolytic 220μF 50WV	
RESISTOR			
Rp1	PD14BY2E103J	Carbon 10kΩ ±5% 1/4W	
Rp2	PD14BY2E332J	Carbon 3.3kΩ ±5% 1/4W	
Rp3, 4	PD14BY2E103J	Carbon 10kΩ ±5% 1/4W	
Rp5	PD14BY2E332J	Carbon 3.3kΩ ±5% 1/4W	
Rp6	PD14BY2E101J	Carbon 100Ω ±5% 1/4W	
Rp7	PD14BY2E104J	Carbon 100kΩ ±5% 1/4W	
Rp8, 9	PD14BY2E223J	Carbon 22kΩ ±5% 1/4W	
Rp10	PD14BY2E272J	Carbon 2.7kΩ ±5% 1/4W	
Rp11,12	PD14BY2E183J	Carbon 18kΩ ±5% 1/4W	
Rp13,14	PD14BY2E223J	Carbon 22kΩ ±5% 1/4W	
Rp15	RC05GF2H560K	Carbon 56Ω ±10% 1/2W	
Rp16	RN14AB3D181KB	Metal film 180Ω ±10% 2W	
Rp17	PD14BY2E103J	Carbon 10kΩ ±5% 1/4W	
Rp18	RN14AB3D220KB	Metal film 22Ω ±10% 2W	
Rp19	R92-0108-05	Metal film 4.7Ω ±10% 2W	
Rp20	PD14BY2E222J	Carbon 2.2kΩ ±5% 1/4W	
Rp21	PD14BY2E332J	Carbon 3.3kΩ ±5% 1/4W	
Rp22	RN14AB3A181KB	Metal film 180Ω ±10% 1W	
Rp23	PD14BY2E562J	Carbon 5.6kΩ ±5% 1/4W	
Rp24	PD14BY2E102J	Carbon 1kΩ ±5% 1/4W	
Rp25	PD14BY2E561J	Carbon 560Ω ±5% 1/4W	
Rp26	RN14AB3A331KB	Metal film 330Ω ±5% 1W	
SEMICONDUCTOR			
Qp1	V03-0360-05	Transistor 2SC1451 (G) or (B)	
Qp2	V01-0073-05	Transistor 2SA673A (C)	
Qp3	V03-0358-05	Transistor 2SC1416 (GR)	
Qp4, 5	V03-0215-05	Transistor 2SC1213A (C)	
Qp6	V01-0073-05	Transistor 2SA673A (C)	
Qp7	V03-0330-05	Transistor 2SC789 (O) or (R)	
Qp8	V03-0279-05	Transistor 2SC1000 (BL)	
Dp1~6	V11-0273-05	Diode 1S2076	
Dp7, 8	V11-0219-05	Diode V06B	
Dp9	V11-0254-05	Zener diode YZ-140	
COIL			
Lp1	L40-1091-03	Ferri-inductor	
POTENTIOMETER			
VRp1	R12-0047-05	PC trimmer 500Ω (B)	
MISCELLANEOUS			
—	E19-0302-05	Pin assembly (3P)	
—	E19-0401-05	Pin assembly (4P) x 3	
—	F01-0208-04	Heat sink	
Ryp1, 2	S51-2017-15	Relay	

PUSHBUTTON SW (X13-1570-11)

Ref. No.	Parts No.	Description	Re-marks
CAPACITOR			
Ch1~12	CK45D1H561M	Ceramic 560pF ±20%	
Ch13~16	CQ93M1H473K	Mylar 0.047μF ±10%	
Ch17~24	CE04W1H010BR	Electrolytic 1μF 50WV	
Ch25~28	CQ93M1H103K	Mylar 0.01μF ±10%	
Ch29~32	CQ93M1H562K	Mylar 0.0056μF ±10%	
Ch33~36	CE04W1V3R3NP	Electrolytic 3.3μF 35WV	
Ch37~40	CQ93M1H224K	Mylar 0.22μF ±10%	
Ch41	CE04W1H470	Electrolytic 47μF 50WV	
RESISTOR			
Rh1~8	PD14BY2E222J	Carbon 2.2kΩ ±5% 1/4W	
Rh9~12	PD14BY2E392J	Carbon 3.9kΩ ±5% 1/4W	
Rh13~16	PD14BY2E103J	Carbon 10kΩ ±5% 1/4W	
Rh17~20	PD14BY2E122J	Carbon 1.2kΩ ±5% 1/4W	
Rh21~24	PD14BY2E224J	Carbon 220kΩ ±5% 1/4W	
Rh25~28	PD14BY2E333J	Carbon 33kΩ ±5% 1/4W	
Rh29~32	PD14BY2E394J	Carbon 390kΩ ±5% 1/4W	
Rh33~36	PD14BY2E103J	Carbon 10kΩ ±5% 1/4W	
Rh37~40	PD14BY2E681J	Carbon 680Ω ±5% 1/4W	
Rh41~44	PD14BY2E224J	Carbon 220kΩ ±5% 1/4W	
Rh45~48	PD14BY2E124J	Carbon 120kΩ ±5% 1/4W	
Rh49~52	PD14BY2E471J	Carbon 470Ω ±5% 1/4W	
Rh53~56	PD14BY2E390J	Carbon 39Ω ±5% 1/4W	
Rh57~60	RN14AB3D4R7KB	Metal film 4.7Ω ±10% 2W	
Rh61~64	RC05GF2H681K	Carbon 680Ω ±10% 1/2W	
SEMICONDUCTOR			
Qh1~4	V03-0309-05	Transistor 2SC1345 (E) or (D)	
Dh1~8	V11-0051-05	Diode 1N60	
POTENTIOMETER			
VRh1~4	R12-2016-05	PC trimmer 5kΩ (B) VU-METER	ADJ.
SWITCH			
S4~12	S41-9001-05	Pushbutton (9 keys)	
MISCELLANEOUS			
—	E11-0002-05	Phone jack x 2	
—	E19-0302-05	Pin assembly (E-01, E-02, B-01, B-02) x 4	

www.hifiengine.com

PARTS LIST

Ref. No.	Parts No.	Description	Re-marks
—	E19-0401-05	Pin assembly (A-01, A-03 ~ A-06, C01 ~ C-05, D-01, D-02) x 12	
—	E19-0602-05	Pin assembly (A-02, C06, E-03)x3	
—	J19-0362-13	Pushbutton switch stopper	

CD-4 (X15-1120-06)

Ref. No.	Parts No.	Description	Re-marks
		CAPACITOR	
Cz1, 2	CQ93M1H102J	Mylar 0.001μ ±5%	
Cz3	CE04W1H010	Electrolytic 1μF 50WV	
Cz4	CQ93M1H222J	Mylar 0.0022μF ±5%	
Cz5	CK45F1H223Z	Ceramic 0.022μF +80%,—20%	
Cz6	CE04W1H010	Electrolytic 1μF 50WV	
Cz7	CQ93M1H272J	Mylar 0.0027μF ±5%	Qz27,28 =SL24487
	CQ93M1H332J	Mylar 0.0033μF ±5%	Qz27,28 =CD894K
Cz8	CQ93M1H272J	Mylar 0.0027μF ±5%	
Cz9	CE04W1E100	Electrolytic 10μF 25WV	
Cz11	CE04W0J101	Electrolytic 100μF 6.3WV	
Cz12	CE04W1E4R7	Electrolytic 4.7μF 25WV	
Cz13	CE04W1H010MBR	Electrolytic 1μF 50WV	
Cz15	CQ93M1H104J	Mylar 0.1μF ±5%	
Cz16	CQ93M1H103J	Mylar 0.01μF ±5%	
Cz17	CS15E1VR22M	Tantalum 0.22μF 35WV	
Cz18~20	CE04W1H010MBR	Electrolytic 1μF 50WV	
Cz21	CE04W0J101	Electrolytic 100μF 6.3WV	
Cz22	CE04W1H010MBR	Electrolytic 1μF 50WV	
Cz23	CQ93M1H272J	Mylar 0.0027μF ±5%	
Cz24	CQ93M1H122J	Mylar 0.0012μF ±5%	
Cz25	CQ93M1H102J	Mylar 0.001μF ±5%	
Cz26	CK45F1H223Z	Ceramic 0.022μF +80%,—20%	
Cz27	CQ93M1H332K	Mylar 0.0033μF ±10%	
Cz28	CE04W1C330	Electrolytic 33μF 16WV	
Cz29	CC45SL1H221K	Ceramic 220pF ±10%	
Cz30	CQ08S1H102J	Polystyrene 0.001μF ±5%	
Cz31	CS15E1VR22M	Tantalum 0.22μF 35WV	
Cz32	CQ93M1H473J	Mylar 0.047μF ±5%	
Cz33	CQ93M1H332K	Mylar 0.0033μF ±10%	
Cz34,35	CQ93M1H154K	Mylar 0.15μF ±10%	
Cz36	CQ93M1H124J	Mylar 0.12μF ±5%	
Cz37	CQ93M1H104J	Mylar 0.1μF ±5%	
Cz38	CS15E1VR47M	Tantalum 0.47μF 35WV	
Cz40	CS15E1VR10M	Tantalum 0.1μF 35WV	
Cz41	CE04W1E100	Electrolytic 10μF 25WV	
Cz42,43	CQ93M1H102J	Mylar 0.001μF ±5%	
Cz44	CE04W1H010	Electrolytic 1μF 50WV	
Cz45	CK45F1H223Z	Ceramic 0.022μF +80%,—20%	
Cz46	CQ93M1H222J	Mylar 0.0022μF ±5%	
Cz47	CE04W1H010	Electrolytic 1μF 50WV	
Cz48	CQ93M1H272J	Mylar 0.0027μF ±5%	Qz27,28 =SL24487
	CQ93M1H332J	Mylar 0.0033μF ±5%	Qz27,28 =CD894K
Cz49	CQ93M1H272J	Mylar 0.0027μF ±5%	
Cz50	CE04W1E100	Electrolytic 10μF 25WV	
Cz52	CE04W0J101	Electrolytic 100μF 6.3WV	
Cz53	CE04W1E4R7	Electrolytic 4.7μF 25WV	
Cz54	CE04W1H010MBR	Electrolytic 1μF 50WV	
Cz56	CQ93M1H104J	Mylar 0.1μF ±5%	
Cz57	CQ93M1H103J	Mylar 0.01μF ±5%	
Cz58	CS15E1VR22M	Tantalum 0.22μF 35WV	
Cz59~61	CE04W1H010MBR	Electrolytic 1μF 50WV	
Cz62	CE04W0J101	Electrolytic 100μF 6.3WV	
Cz63	CE04W1H010MBR	Electrolytic 1μF 50WV	
Cz64	CQ93M1H272J	Mylar 0.0027μF ±5%	
Cz65	CQ93M1H122J	Mylar 0.0012μF ±5%	
Cz66	CQ93M1H102J	Mylar 0.001μF ±5%	
Cz67	CK45F1H223Z	Ceramic 0.022μF +80%,—20%	
Cz68	CQ93M1H332K	Mylar 0.0033μF ±10%	
Cz69,70	CQ93M1H154K	Mylar 0.15μF ±10%	
Cz71	CQ93M1H124J	Mylar 0.12μF ±10%	
Cz72	CQ93M1H104J	Mylar 0.1μF ±10%	
Cz74	CS15E1VR47M	Tantalum 0.47μF 35WV	
Cz75	CS15E1VR10M	Tantalum 0.1μF 35WV	
Cz76	CE04W1E100	Electrolytic 10μF 25WV	
Cz77,78	CQ93M1H223J	Mylar 0.022μF ±5%	
Cz79	CE04W1E4R7	Electrolytic 4.7μF 25WV	
Cz80	CQ93M1H123J	Mylar 0.012μF ±5%	
Cz81	CE04W1E4R7	Electrolytic 4.7μF 25WV	
Cz82	CQ93M1H123J	Mylar 0.012μF ±5%	
Cz83	CE04W1E101	Electrolytic 100μF 25WV	
		RESISTOR	
Rz1	PD14BY2B124J	Carbon 120kΩ ±5% 1/8W	
Rz2	PD14BY2B223J	Carbon 22kΩ ±5% 1/8W	
Rz3	PD14BY2B562J	Carbon 5.6kΩ ±5% 1/8W	
Rz4	PD14BY2B103J	Carbon 10kΩ ±5% 1/8W	
Rz5	PD14BY2B181J	Carbon 180Ω ±5% 1/8W	
Rz6	PD14BY2B182J	Carbon 1.8kΩ ±5% 1/8W	
Rz7,8	PD14BY2B103J	Carbon 10kΩ ±5% 1/8W	
Rz9,10	PD14BY2B121J	Carbon 120Ω ±5% 1/8W	
Rz11	PD14BY2B103J	Carbon 10kΩ ±5% 1/8W	
Rz12	PD14BY2B222J	Carbon 2.2kΩ ±5% 1/8W	
Rz13	PD14BY2B332J	Carbon 3.3kΩ ±5% 1/8W	Qz27,28 =SL24487
	PD14BY2B272J	Carbon 2.7kΩ ±5% 1/8W	Qz27,28 =CD894K
Rz14	PD14BY2B154J	Carbon 150kΩ ±5% 1/8W	
Rz15	PD14BY2B333J	Carbon 33kΩ ±5% 1/8W	
Rz16	PD14BY2B472J	Carbon 4.7kΩ ±5% 1/8W	
Rz17	PD14BY2B102J	Carbon 1kΩ ±5% 1/8W	
Rz18	PD14BY2B682J	Carbon 6.8kΩ ±5% 1/8W	
Rz19	PD14BY2B124J	Carbon 120kΩ ±5% 1/8W	
Rz20	PD14BY2B473J	Carbon 47kΩ ±5% 1/8W	
Rz21	PD14BY2B222J	Carbon 2.2kΩ ±5% 1/8W	
Rz23	PD14BY2B222J	Carbon 2.2kΩ ±5% 1/8W	
Rz24	PD14BY2B273J	Carbon 27kΩ ±5% 1/8W	
Rz25	PD14BY2B562J	Carbon 5.6kΩ ±5% 1/8W	
Rz26	PD14BY2B102J	Carbon 1kΩ ±5% 1/8W	
Rz27	PD14BY2B562J	Carbon 5.6kΩ ±5% 1/8W	
Rz28	PD14BY2B332J	Carbon 3.3kΩ ±5% 1/8W	
Rz29	PD14BY2B224J	Carbon 220kΩ ±5% 1/8W	
Rz30	PD14BY2B104J	Carbon 100kΩ ±5% 1/8W	
Rz31,32	PD14BY2B222J	Carbon 2.2kΩ ±5% 1/8W	
Rz33,34	PD14BY2B103J	Carbon 10kΩ ±5% 1/8W	
Rz35	PD14BY2B123J	Carbon 12kΩ ±5% 1/8W	
Rz36	PD14BY2B103J	Carbon 10kΩ ±5% 1/8W	
Rz37	PD14BY2B104J	Carbon 100kΩ ±5% 1/8W	
Rz38	PD14BY2B332J	Carbon 3.3kΩ ±5% 1/8W	
Rz39	PD14BY2B821J	Carbon 820Ω ±5% 1/8W	
Rz40	PD14BY2B331J	Carbon 330Ω ±5% 1/8W	
Rz41	PD14BY2B473J	Carbon 47kΩ ±5% 1/8W	
Rz42	PD14BY2B224J	Carbon 220kΩ ±5% 1/8W	

www.hifiengine.com

PARTS LIST

Ref. No.	Parts No.	Description	Remarks
Rz43	PD14BY2B333J	Carbon 33kΩ ±5% 1/8W	
Rz44	PD14BY2B561J	Carbon 560Ω ±5% 1/8W	
Rz45	PD14BY2B472J	Carbon 4.7kΩ ±5% 1/8W	
Rz48	PD14BY2B224J	Carbon 220kΩ ±5% 1/8W	
Rz49	PD14BY2B123J	Carbon 12kΩ ±5% 1/8W	
Rz50	PD14BY2B682J	Carbon 6.8kΩ ±5% 1/8W	
Rz51	PD14BY2B822J	Carbon 8.2kΩ ±5% 1/8W	
Rz52	PD14BY2B151J	Carbon 150Ω ±5% 1/8W	
Rz53	RN14AB3A331J	Metal film 330Ω ±5% 1W	
Rz54	PD14BY2B103J	Carbon 10kΩ ±5% 1/8W	
Rz55	PD14BY2B224J	Carbon 220kΩ ±5% 1/8W	
Rz56	PD14BY2B393J	Carbon 39kΩ ±5% 1/8W	
Rz57	PD14BY2B273J	Carbon 27kΩ ±5% 1/8W	
Rz58	PD14BY2B102J	Carbon 1kΩ ±5% 1/8W	
Rz59	PD14BY2B563J	Carbon 56kΩ ±5% 1/8W	
Rz60	PD14BY2B333J	Carbon 33kΩ ±5% 1/8W	
Rz61	PD14BY2B562J	Carbon 5.6kΩ ±5% 1/8W	
Rz62	PD14BY2B683J	Carbon 68kΩ ±5% 1/8W	
Rz63	PD14BY2B682J	Carbon 6.8kΩ ±5% 1/8W	
Rz64	PD14BY2B472J	Carbon 4.7kΩ ±5% 1/8W	
Rz65	PD14BY2B221J	Carbon 220Ω ±5% 1/8W	
Rz66	PD14BY2B223J	Carbon 22kΩ ±5% 1/8W	
Rz67	PD14BY2B473J	Carbon 47kΩ ±5% 1/8W	
Rz68	PD14BY2B224J	Carbon 220kΩ ±5% 1/8W	
Rz69	PD14BY2B562J	Carbon 5.6kΩ ±5% 1/8W	
Rz70	PD14BY2B221J	Carbon 220Ω ±5% 1/8W	
Rz71	PD14BY2B123J	Carbon 12kΩ ±5% 1/8W	
Rz73	PD14BY2B821J	Carbon 820Ω ±5% 1/8W	
Rz74	PD14BY2B224J	Carbon 220kΩ ±5% 1/8W	
Rz75	PD14BY2B223J	Carbon 22kΩ ±5% 1/8W	
Rz76,77	PD14BY2B104J	Carbon 100kΩ ±5% 1/8W	
Rz78	RN14AB3A330J	Metal film 33Ω ±5% 1W	
Rz79	PD14BY2B273J	Carbon 27kΩ ±5% 1/8W	
Rz80	PD14BY2B124J	Carbon 120kΩ ±5% 1/8W	
Rz81	PD14BY2B223J	Carbon 22kΩ ±5% 1/8W	
Rz82	PD14BY2B103J	Carbon 10kΩ ±5% 1/8W	
Rz83	PD14BY2B562J	Carbon 5.6kΩ ±5% 1/8W	
Rz84	PD14BY2B181J	Carbon 180Ω ±5% 1/8W	
Rz85	PD14BY2B182J	Carbon 1.8kΩ ±5% 1/8W	
Rz86	PD14BY2B103J	Carbon 10kΩ ±5% 1/8W	
Rz87	PD14BY2B101J	Carbon 100Ω ±5% 1/8W	
Rz88	PD14BY2B103J	Carbon 10kΩ ±5% 1/8W	
Rz89	PD14BY2B101J	Carbon 100Ω ±5% 1/8W	
Rz90	PD14BY2B103J	Carbon 10kΩ ±5% 1/8W	
Rz91	PD14BY2B222J	Carbon 2.2kΩ ±5% 1/8W	
Rz92	PD14BY2B332J	Carbon 3.3kΩ ±5% 1/8W	Qz27,28 =SL24487
	PD14BY2B272J	Carbon 2.7kΩ ±5% 1/8W	Qz27,28 =CD984K
Rz93	PD14BY2B154J	Carbon 150kΩ ±5% 1/8W	
Rz94	PD14BY2B333J	Carbon 33kΩ ±5% 1/8W	
Rz95	PD14BY2B472J	Carbon 4.7kΩ ±5% 1/8W	
Rz96	PD14BY2B102J	Carbon 1kΩ ±5% 1/8W	
Rz97	PD14BY2B563J	Carbon 56kΩ ±5% 1/8W	
Rz98	PD14BY2B682J	Carbon 6.8kΩ ±5% 1/8W	
Rz99	PD14BY2B124J	Carbon 120kΩ ±5% 1/8W	
Rz100	PD14BY2B473J	Carbon 47kΩ ±5% 1/8W	
Rz101	PD14BY2B222J	Carbon 2.2kΩ ±5% 1/8W	
Rz103	PD14BY2B222J	Carbon 2.2kΩ ±5% 1/8W	
Rz104	PD14BY2B273J	Carbon 27kΩ ±5% 1/8W	
Rz105	PD14BY2B102J	Carbon 1kΩ ±5% 1/8W	
Rz106,107	PD14BY2B562J	Carbon 5.6kΩ ±5% 1/8W	
Rz108	PD14BY2B332J	Carbon 3.3kΩ ±5% 1/8W	
Rz109	PD14BY2B224J	Carbon 220kΩ ±5% 1/8W	
Rz110	PD14BY2B104J	Carbon 100kΩ ±5% 1/8W	
Rz111,112	PD14BY2B222J	Carbon 2.2kΩ ±5% 1/8W	
Rz113,114	PD14BY2B103J	Carbon 10kΩ ±5% 1/8W	
Rz115	PD14BY2B123J	Carbon 12kΩ ±5% 1/8W	
Rz116	PD14BY2B103J	Carbon 10kΩ ±5% 1/8W	
Rz117	PD14BY2B104J	Carbon 100kΩ ±5% 1/8W	
Rz118	PD14BY2B332J	Carbon 3.3kΩ ±5% 1/8W	
Rz119	PD14BY2B821J	Carbon 820Ω ±5% 1/8W	
Rz120	PD14BY2B331J	Carbon 330Ω ±5% 1/8W	
Rz121	PD14BY2B224J	Carbon 220kΩ ±5% 1/8W	
Rz122	PD14BY2B473J	Carbon 47kΩ ±5% 1/4W	
Rz123	PD14BY2B333J	Carbon 33kΩ ±5% 1/8W	
Rz124	PD14BY2B561J	Carbon 560Ω ±5% 1/8W	
Rz127	PD14BY2B224J	Carbon 220kΩ ±5% 1/8W	
Rz128	PD14BY2B123J	Carbon 12kΩ ±5% 1/8W	
Rz129	PD14BY2B682J	Carbon 6.8kΩ ±5% 1/8W	
Rz130	PD14BY2B822J	Carbon 8.2kΩ ±5% 1/8W	
Rz131	PD14BY2B151J	Carbon 150Ω ±5% 1/8W	
Rz132,133	PD14BY2B223J	Carbon 22kΩ ±5% 1/8W	
Rz134	PD14BY2B224J	Carbon 220kΩ ±5% 1/8W	
Rz135	PD14BY2B473J	Carbon 47kΩ ±5% 1/8W	
Rz136	PD14BY2B562J	Carbon 5.6kΩ ±5% 1/8W	
Rz137	PD14BY2B221J	Carbon 220Ω ±5% 1/8W	
Rz139	PD14BY2B821J	Carbon 820Ω ±5% 1/8W	
Rz140	PD14BY2B224J	Carbon 220kΩ ±5% 1/8W	
Rz141	PD14BY2B223J	Carbon 22kΩ ±5% 1/8W	
Rz142,143	PD14BY2B104J	Carbon 100kΩ ±5% 1/8W	
Rz144	PD14BY2B472J	Carbon 4.7kΩ ±5% 1/8W	
Rz145,146	PD14BY2B563J	Carbon 56kΩ ±5% 1/8W	
Rz147,148	PD14BY2B103J	Carbon 10kΩ ±5% 1/8W	
Rz149	PD14BY2B333J	Carbon 33kΩ ±5% 1/8W	
Rz150	PD14BY2B222J	Carbon 2.2kΩ ±5% 1/8W	
Rz151	PD14BY2B333J	Carbon 33kΩ ±5% 1/8W	
Rz152	PD14BY2B222J	Carbon 2.2kΩ ±5% 1/8W	
SEMICONDUCTOR			
Qz1~7	V03-0292-05	Transistor 2SC1335 (E)	
Qz8	V03-0346-05	Transistor 2SC828A (S)	
Qz9~13	V03-9900-05	Transistor 2SC828A (Q) or (R)	
Qz14~20	V03-0292-05	Transistor 2SC1335 (E)	
Qz21,22	V03-9900-05	Transistor 2SC828A (Q) or (R)	
Qz23	V09-0041-05	FET 3SK30 (A)	
Qz24	V09-0041-05	FET 3SK30 (A) or (B)	
Qz25	V09-0041-05	FET 3SK30 (A)	
Qz26	V09-0041-05	FET 3SK30 (A) or (B)	
Qz27,28	V30-0073-05	IC SL-24487-or CD894K	
Dz1, 2	V11-0076-05	Diode 1S1555	
Dz3	V11-0254-05	Diode YZ-140	
Dz4~6	V11-0076-05	Diode 1S1555	
Dz7, 8	V11-0051-05	Diode 1N60	
Dz9~11	V11-0076-05	Diode 1S1555	
Dz12,13	V11-0051-05	Diode 1N60	
COIL			
Lz1	L40-2735-21	Ferri-inductor	
Lz2, 3	L79-0016-05	Low-pass filter	
Lz4, 5	L40-5635-21	Ferri-inductor	
POTENTIOMETER			
VRz1	R12-1027-05	PC trimmer 2kΩ (B)	
VRz2	R12-4019-05	PC trimmer 50kΩ (B)	
VRz3	R12-1021-05	PC trimmer 1kΩ (B)	
VRz4	R12-3030-05	PC trimmer 10kΩ (B)	
VRz5	R12-1027-05	PC trimmer 2kΩ (B)	
VRz6	R12-4019-05	PC trimmer 50kΩ (B)	

www.hifiengine.com

PARTS LIST

Ref. No.	Parts No.	Description	Re-marks
VRz7	R12-1021-05	PC trimmer 1kΩ (B)	
VRz8	R12-3030-05	PC trimmer 10kΩ (B)	
VRz9,10	R01-2008-05	Potentiometer 5kΩ (B)	
VRz11,12	R01-4020-05	Potentiometer 50kΩ (B)	
MISCELLANEOUS			
—	A02-0037-12	Case A (top)	
—	A02-0038-12	Case B (bottom)	
—	B42-0441-24	Name plate	
—	B42-0491-04	Serial No. sticker	
—			
—	K23-0141-04	Knob x 4	

SQ/RM (X15-1170-00)

Ref. No.	Parts No.	Description	Re-marks
CAPACITOR			
Cy1, 2	CE04W1H3R3	Electrolytic 3.3μF 50WV	
Cy3, 4	CQ93M1H104J	Mylar 0.1μF ±5%	
Cy5, 6	CQ93M1H334K	Mylar 0.33μF ±10%	
Cy7, 8	CQ93M1H123J	Mylar 0.012μF ±5%	
Cy9, 10	CQ93M1H104J	Mylar 0.1μF ±5%	
Cy11, 12	CQ93M1H152J	Mylar 0.0015μF ±5%	
Cy13, 14	CQ93M1H103J	Mylar 0.01μF ±5%	
Cy15, 16	CQ93M1H102J	Mylar 0.001μF ±5%	
Cy17, 18	CQ93M1H472J	Mylar 0.0047μF ±5%	
Cy19~24	CE04W1H3R3	Electrolytic 3.3μF 50WV	
Cy25~30	CE04W1H010	Electrolytic 1μF 50WV	
Cy39~41	CE04W1H010	Electrolytic 1μF 50WV	
Cy42~49	CE04W1H4R7	Electrolytic 4.7μF 25WV	
Cy50, 51	CE04W1E100 MBR	Electrolytic 10μF 25WV	
Cy52	CQ93M1H224K	Mylar 0.22μF ±10%	
Cy53, 54	CQ93M1H104J	Mylar 0.1μF ±5%	
Cy55, 56	CE04W1H010	Electrolytic 1μF 50WV	
Cy57, 58	CQ93M1H223J	Mylar 0.022μF ±5%	
Cy59~62	CQ93M1H102J	Mylar 0.001μF ±5%	
Cy63~66	CC45SL1H100D	Ceramic 10pF ±0.5pF	
Cy67	CE04W1H010	Electrolytic 1μF 50WV	
RESISTOR			
Ry1, 2	PD14BY2E824J	Carbon 820kΩ ±5% 1/4W	
Ry3, 4	PD14BY2E683J	Carbon 68kΩ ±5% 1/4W	
Ry5, 6	PD14BY2E224J	Carbon 220kΩ ±5% 1/4W	
Ry7~34	PD14CY2E202J	Carbon 2kΩ ±5% 1/4W	
Ry35,36	PD14CY2E393J	Carbon 39kΩ ±5% 1/4W	
Ry37,38	PD14CY2E513J	Carbon 51kΩ ±5% 1/4W	
Ry39.40	PD14CY2E393J	Carbon 39kΩ ±5% 1/4W	
Ry41,42	PD14CY2E133J	Carbon 13kΩ ±5% 1/4W	
Ry43,44	PD14CY2E363J	Carbon 36kΩ ±5% 1/4W	
Ry45,46	PD14CY2E163J	Carbon 16kΩ ±5% 1/4W	
Ry47,48	PD14CY2E432J	Carbon 4.3kΩ ±5% 1/4W	
Ry49,50	PD14CY2E392J	Carbon 3.9kΩ ±5% 1/4W	
Ry51~58	PD14CY2E823J	Carbon 82kΩ ±5% 1/4W	
Ry59,60	PD14CY2E124J	Carbon 120kΩ ±5% 1/4W	
Ry61~64	PD14CY2E302J	Carbon 3kΩ ±5% 1/4W	
Ry65,66	PD14CY2E152J	Carbon 1.5kΩ ±5% 1/4W	
Ry67,68	PD14CY2E432J	Carbon 4.3kΩ ±5% 1/4W	
Ry69,70	PD14CY2E112J	Carbon 1.1kΩ ±5% 1/4W	
Ry71,72	PD14CY2E432J	Carbon 4.3kΩ ±5% 1/4W	
Ry73,74	PD14CY2E242J	Carbon 2.4kΩ ±5% 1/4W	
Ry75~77	PD14CY2E432J	Carbon 4.3kΩ ±5% 1/4W	
Ry78,79	PD14CY2E242J	Carbon 2.4kΩ ±5% 1/4W	
Ry80	PD14CY2E432J	Carbon 4.3kΩ ±5% 1/4W	
Ry81~84	PD14CY2E104J	Carbon 100kΩ ±5% 1/4W	
Ry85~88	PD14BY2E102J	Carbon 1kΩ ±5% 1/4W	
Ry89~92	PD14CY2E272J	Carbon 2.7kΩ ±5% 1/4W	
Ry93~96	PD14BY2E102J	Carbon 1kΩ ±5% 1/4W	
Ry97	PD14CY2E433J	Carbon 43kΩ ±5% 1/4W	
Ry98	PD14CY2E272J	Carbon 2.7kΩ ±5% 1/4W	
Ry99~106	PD14CY2E104J	Carbon 100kΩ ±5% 1/4W	
Ry107~110	PD14CY2E682J	Carbon 6.8kΩ ±5% 1/4W	
Ry111~114	PD14CY2E104J	Carbon 100kΩ ±5% 1/4W	
Ry117	PD14CY2E104J	Carbon 100kΩ ±5% 1/4W	
Ry119	PD14CY2E333J	Carbon 33kΩ ±5% 1/4W	
Ry122	PD14CY2E103J	Carbon 10kΩ ±5% 1/4W	
Ry124	PD14CY2E562J	Carbon 5.6kΩ ±5% 1/4W	
Ry126	PD14CY2E103J	Carbon 10kΩ ±5% 1/4W	
Ry128	PD14CY2E103J	Carbon 10kΩ ±5% 1/4W	
Ry138	PD14BY2E221J	Carbon 220Ω ±5% 1/4W	
Ry140,141	PD14CY2E103J	Carbon 10kΩ ±5% 1/4W	
Ry142,143	PD14CY2E433J	Carbon 43kΩ ±5% 1/4W	
Ry144,145	PD14BY2E224J	Carbon 220kΩ ±5% 1/4W	
Ry146	PD14BY2E101J	Carbon 100Ω ±5% 1/4W	
Ry147	PD14CY2E103J	Carbon 10kΩ ±5% 1/4W	
Ry148	PD14BY2E102J	Carbon 1kΩ ±5% 1/4W	
Ry149~152	PD14CY2E105J	Carbon 1MΩ ±5% 1/4W	
Ry153	PD14CY2E223J	Carbon 22kΩ ±5% 1/4W	
Ry154	PD14CY2E104J	Carbon 100kΩ ±5% 1/4W	
Ry155	PD14BY2E564J	Carbon 560kΩ ±5% 1/4W	
Ry156	PD14CY2E822J	Carbon 8.2kΩ ±5% 1/4W	
Ry157	PD14CY2E123J	Carbon 12kΩ ±5% 1/4W	
Ry158	PD14BY2E471J	Carbon 470Ω ±5% 1/4W	
Ry159,160	PD14CY2E752J	Carbon 7.5kΩ ±5% 1/4W	
Ry161,162	PD14CY2E104J	Carbon 100kΩ ±5% 1/4W	
SEMICONDUCTOR			
Qy1~18	V03-0309-05	Transistor 2SC1345 (D) or (E)	
Qy19	V01-0084-05	Transistor 2SA733 (Q) or (R)	
Qy20,23, 24	V03-0309-05	Transistor 2SC1345 (D) or (E)	
Qy25	V01-0084-05	Transistor 2SA733 (Q) or (R)	
Qy26~30	V03-0309-05	Transistor 2SC1345 (D) or (E)	
Qy31,32	V01-0084-05	Transistor 2SA733 (Q) or (R)	
Qy35~38	V01-0309-05	Transistor 2SC1345 (D) or (E)	
Qy41	V01-0309-05	Transistor 2SC1345 (D) or (E)	
Qy43	V01-0068-05	FET 2SK40 (C) or (D)	
ICy1	V30-0110-05	IC CX-049	
ICy2	V30-0111-05	IC CX-718	
Dy1~12	V11-0273-05	Diode 1S2076	
Dy16~18	V11-0352-05	Zener diode EQA01-08	
Dy20	V11-0273-05	Diode 1S2076	
POTENTIOMETER			
VRy1, 2	R12-5026-05	PC trimmer potentiometer 220kΩ	
VRy3	R12-3041-05	PC trimmer potentiometer 10kΩ	

www.hifiengine.com

PC BOARD

▼ POWER SUPPLY (X00-1370-10)

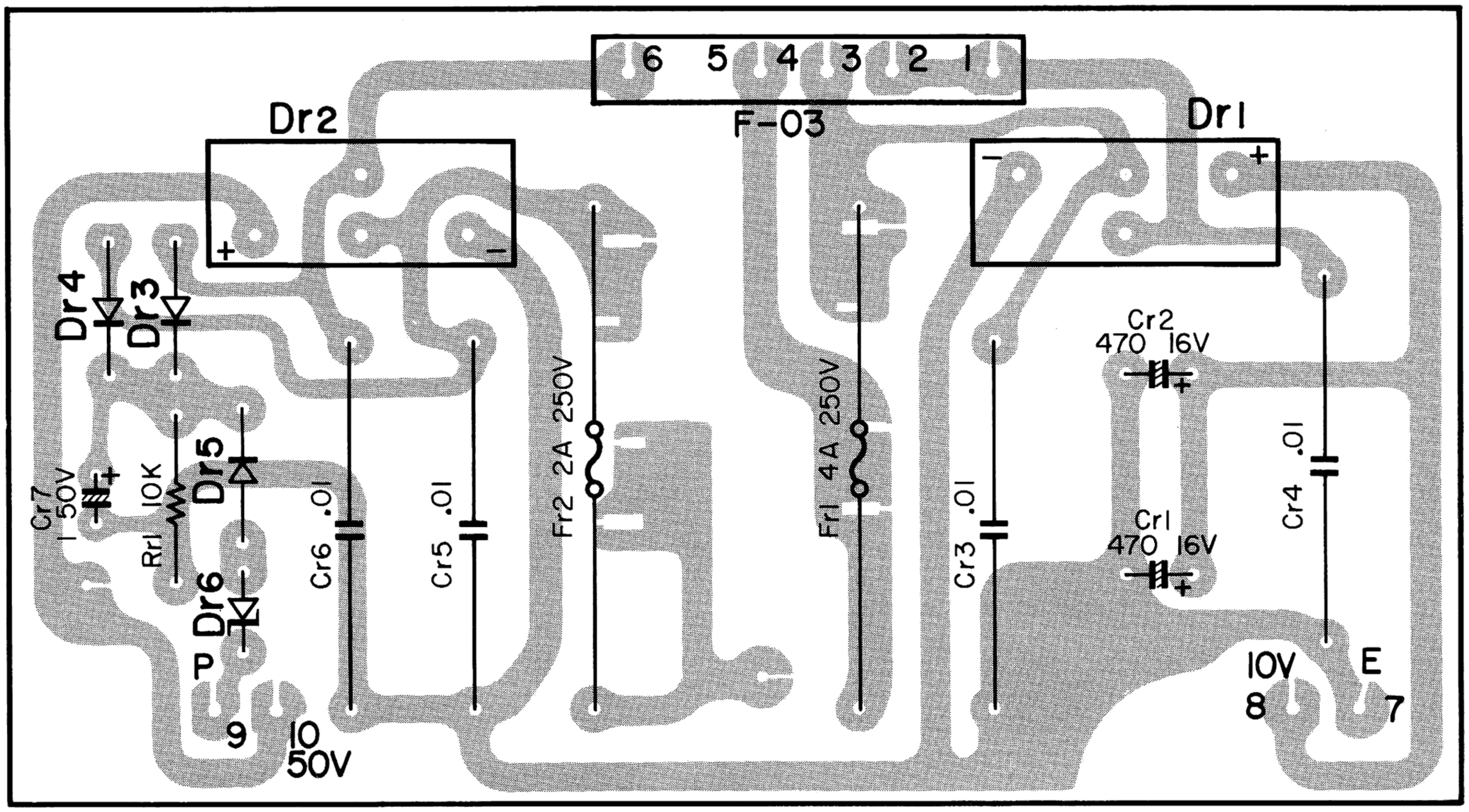

Dr1, 2: SIRB-10 Dr3, 4: W06B Dr5: V06B Dr6: YZ-140

▼ POWER SUPPLY (X00-1590-10)

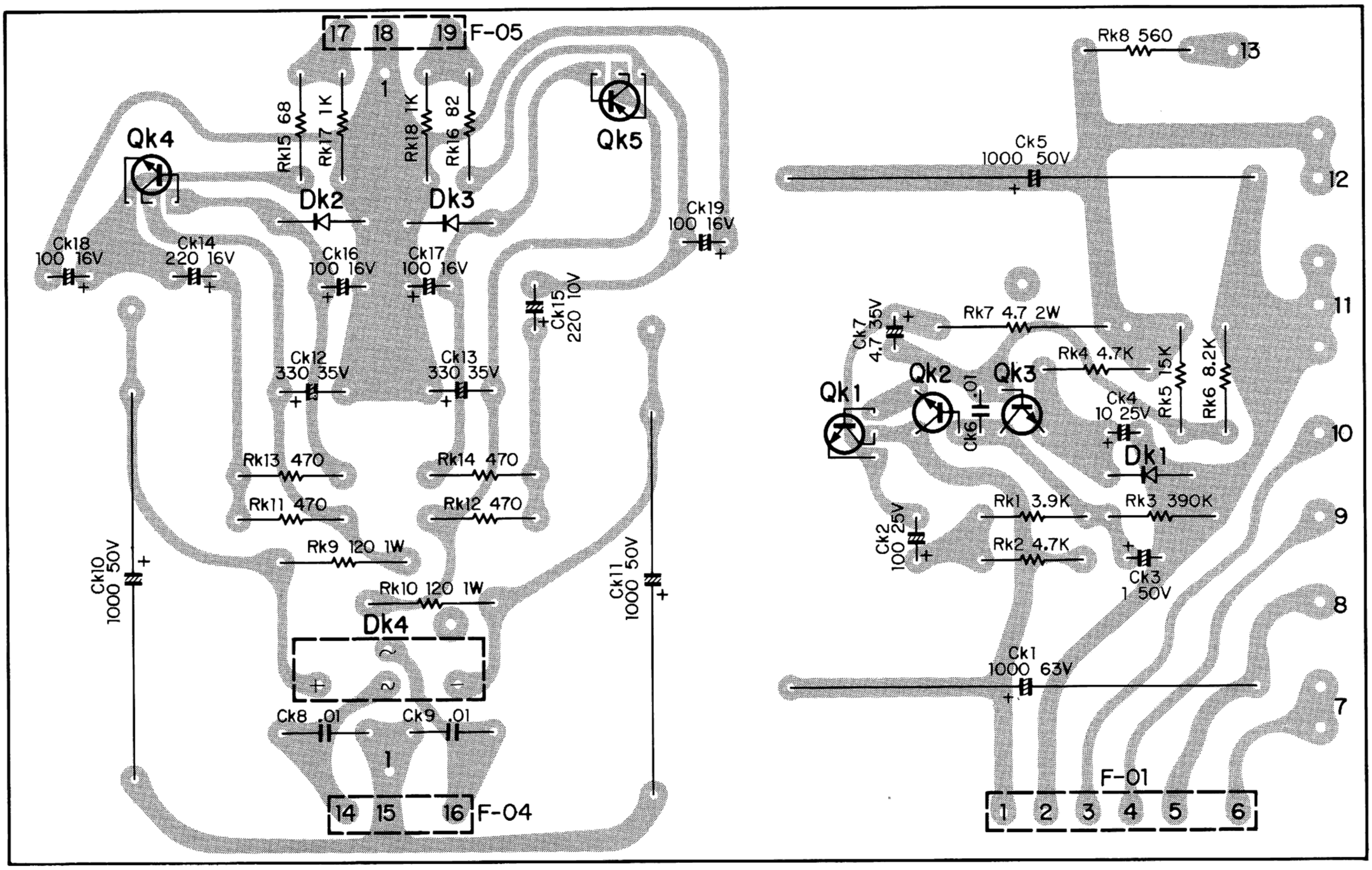

Qk1: 2SC789(O) or (R) Qk2, 3: 2SC1000BL Qk4: 2SC1419(B) or (C)
Qk5: 2SA755(B) or (C) Dk1 ~ 3: YZ-140 Dk4: SIRB-10

www.hifiengine.com

PC BOARD

▼ TUNER (X05-1080-15)

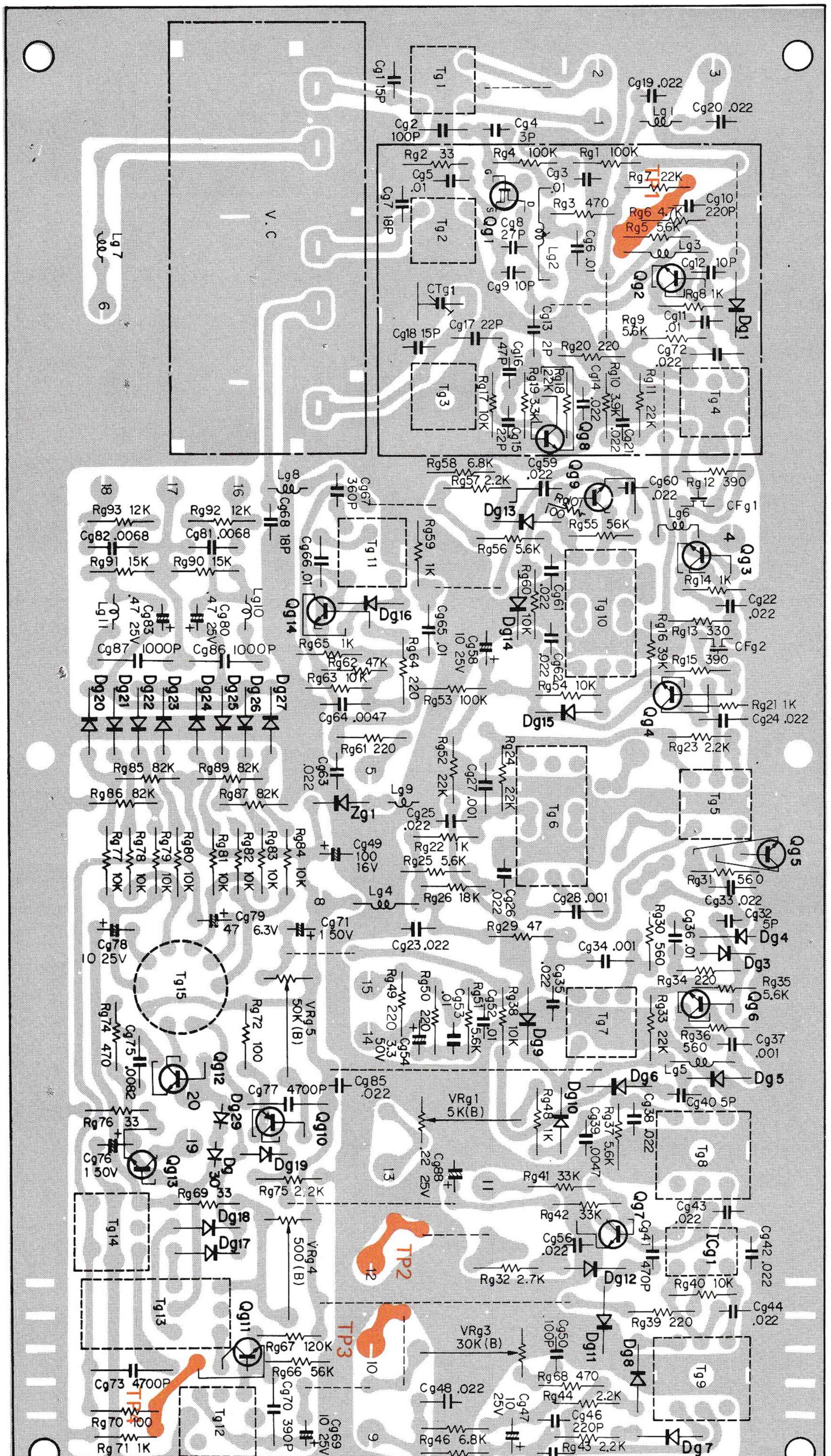

Qg1: 2SK19(GR) or (BL) Qg2 ~ 4: 2SC381(R) Qg5, 6: 2SC535(B) Qg7: 2SC945(Q) or (R) Qg8: 2SC785(R) Qg9, 14: 2SC460(B)
Qg10: 2SA733(Q) or (R) Qg11, 12: 2SC458(D) Qg13: 2SC1213A (C) ICg1: TA7060P Dg1, 2, 5 ~ 12, 14 ~ 18, 20 ~ 27: 1N60
Dg3, 4, 13, 19: 1S1555 or 1S2076 Dg29, 30: MV-13 Zg1: DZ-140

www.hifiengine.com

PC BOARD

▼ MAIN AMP (X07-1230-13, 14)

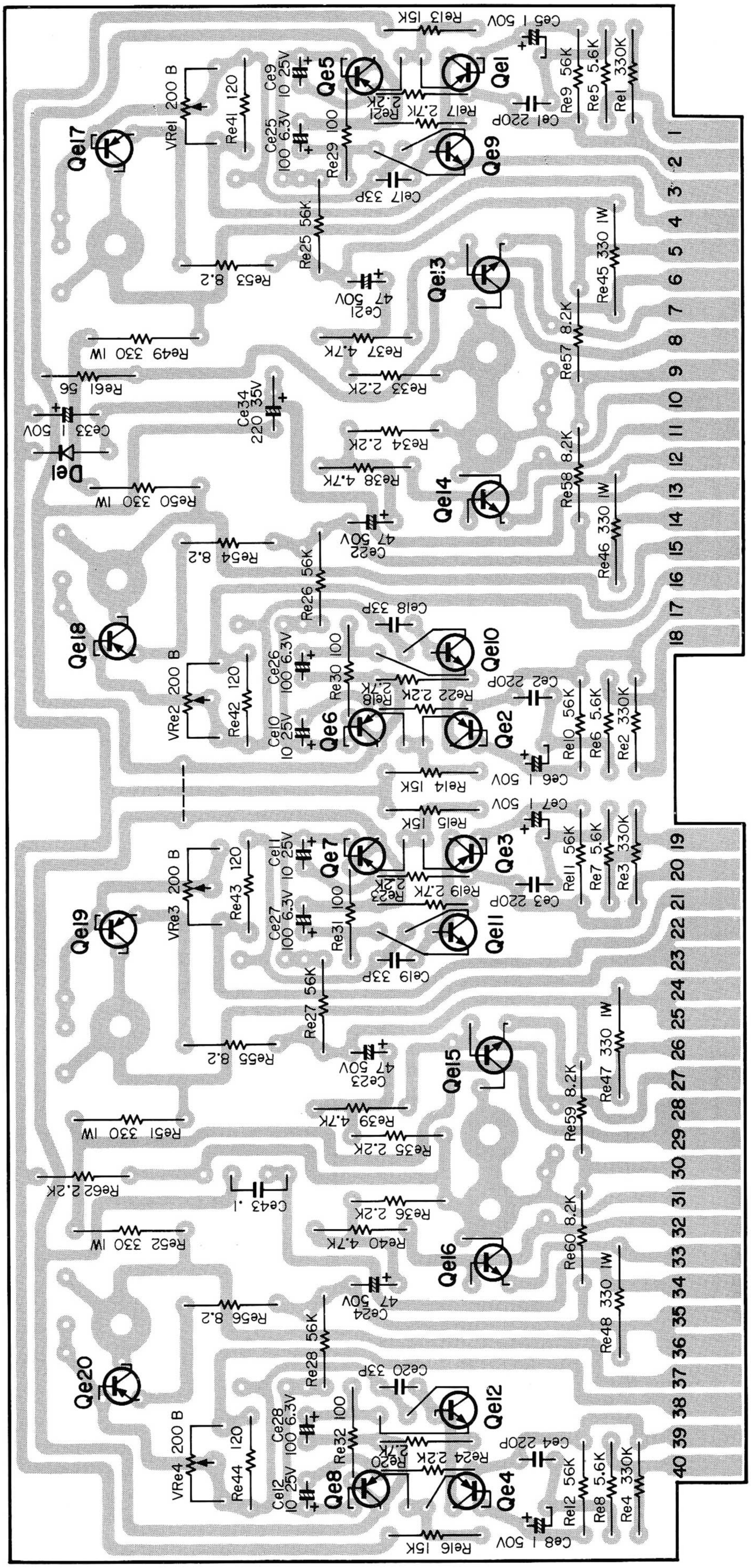

PC BOARD

▼ PREAMP (X08-1180-00)

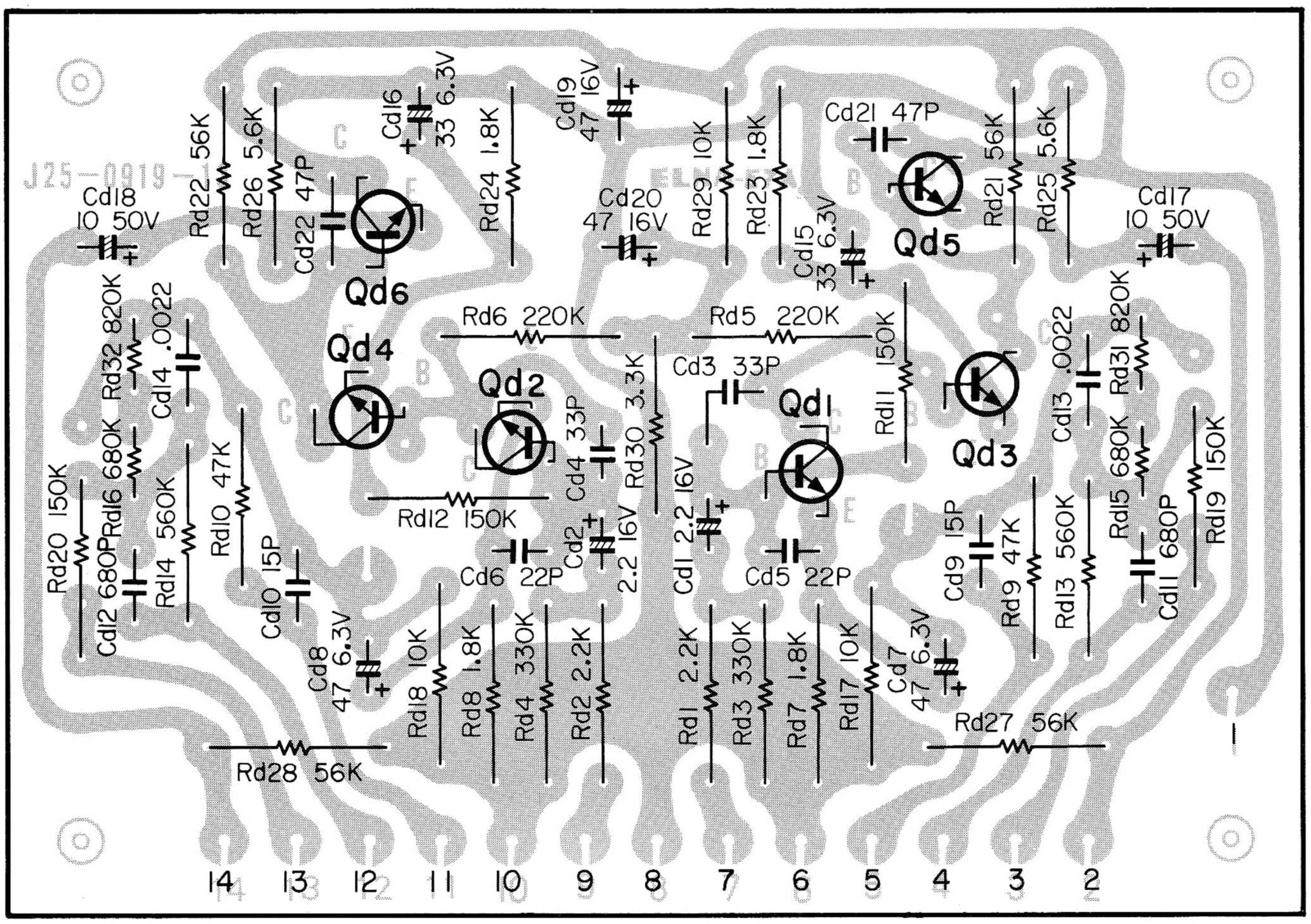

Qd1 ~ 4: 2SC1416AGR Qd5, 6: 2SC1416GR or BL

▼ TONE AMP (X11-1130-00)

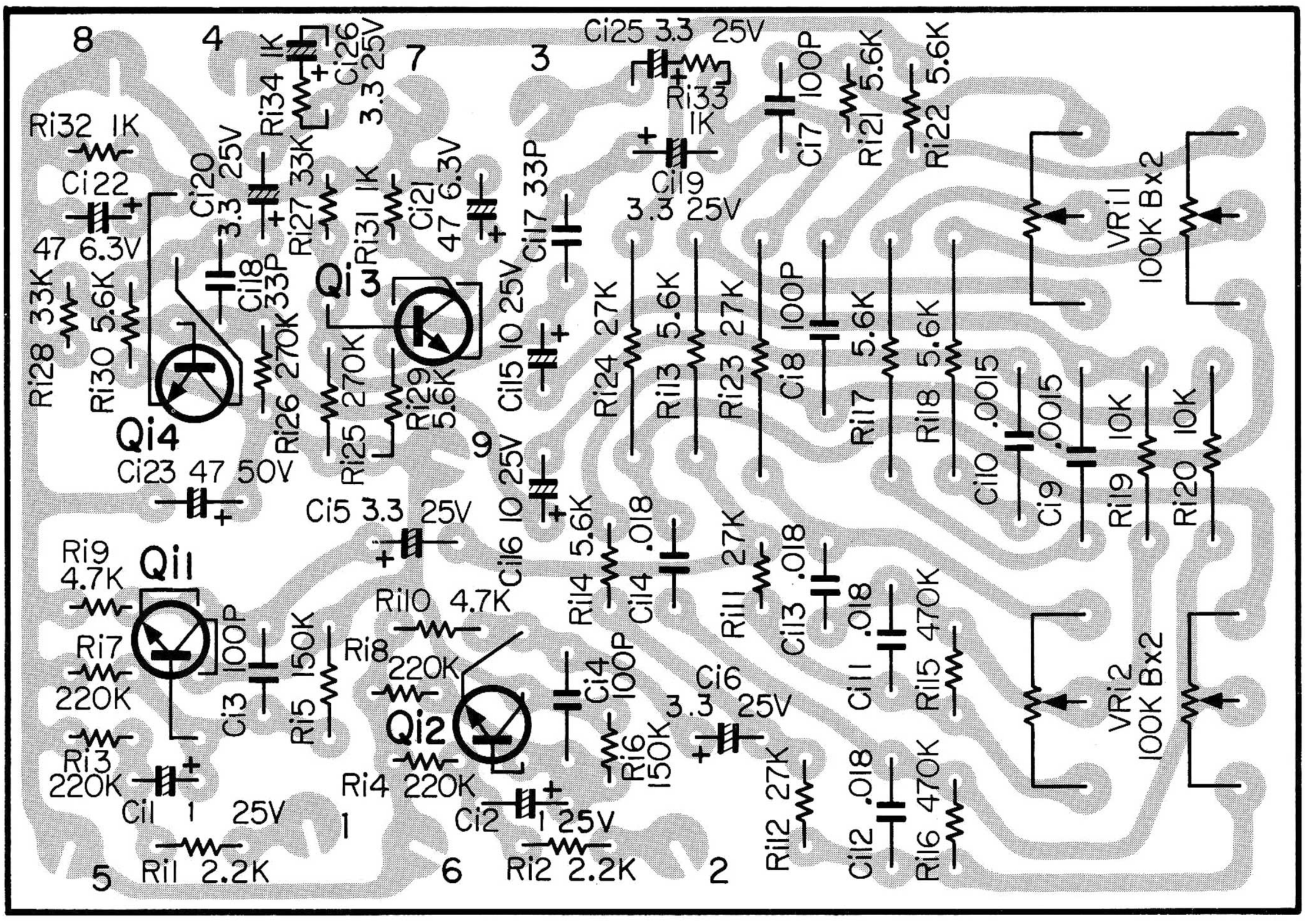

Qi1 ~ 4: 2SC1345(D) or (E)

www.hifiengine.com

PC BOARD

▼ POWER SUPPLY & PROTECTION (X13-1560-10)

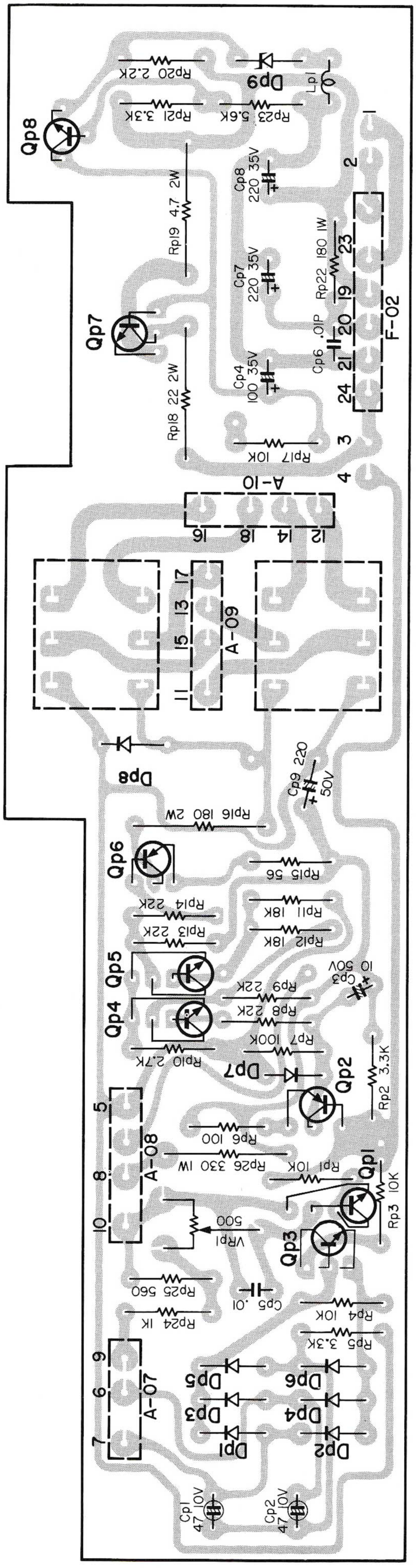

Qp1: 2SC1451(G) or (B) Qp2, 6: 2SA673A(C) Qp3: 2SC1213A(C) Qp4, 5: 2SC1416(GR) Qp7: 2SC789(O) or (R) Qp8: 2SC1000(BL)
Dp1 ~ 6: 1S2076 Dp7, 8: V06B Dp9: YZ-140

▼ PUSH BUTTON SW (X13-1570-11)

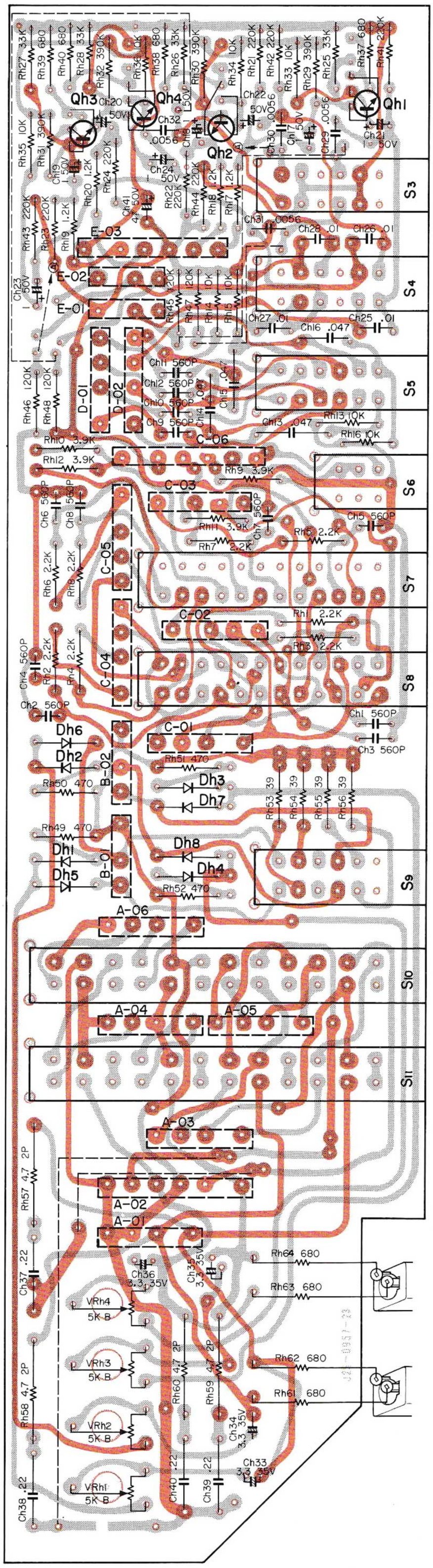

Qh1 ~ 4: 2SC1345(D) or (E) Dh1 ~ 8: 1S1555

www.hifiengine.com

PC BOARD

▼ CD-4 (X15-1120-06)

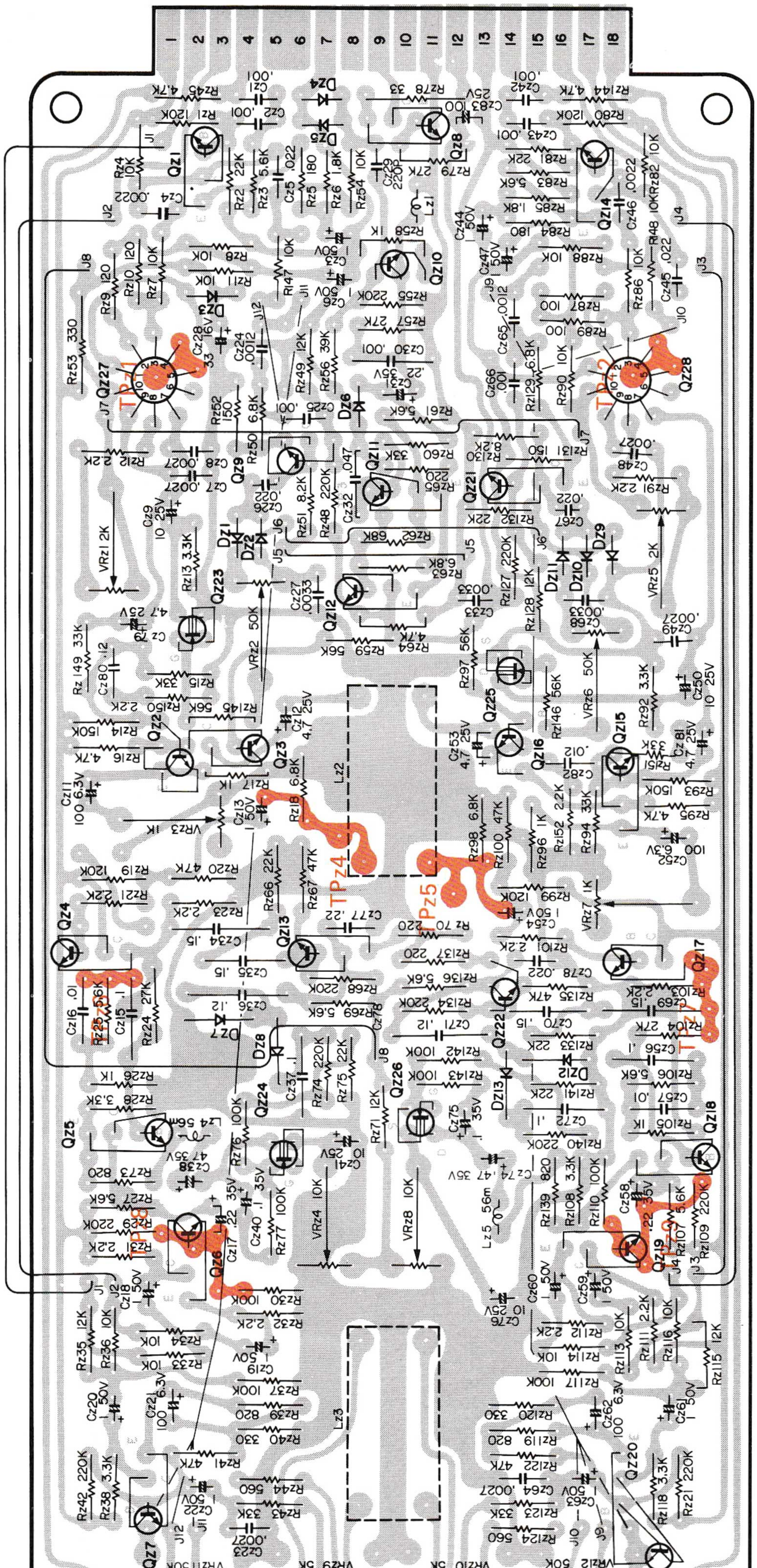

Qz1 ~ 7, 14 ~ 20: 2SC1335(E) Qz8: 2SC828A(S) Qz9 ~ 13, 21, 22: 2SC828A(Q) or (R) Qz23, 25: 3SK30(A) or (B)
Qz27, 28: SL24487 Dz1, 2, 4 ~ 6, 9 ~ 11: 1S1555 Dz3: YZ-140 Dz7, 8, 12, 13: 1N60

www.hifiengine.com

PC BOARD

▼ SQ/RM (X15-1170-00)

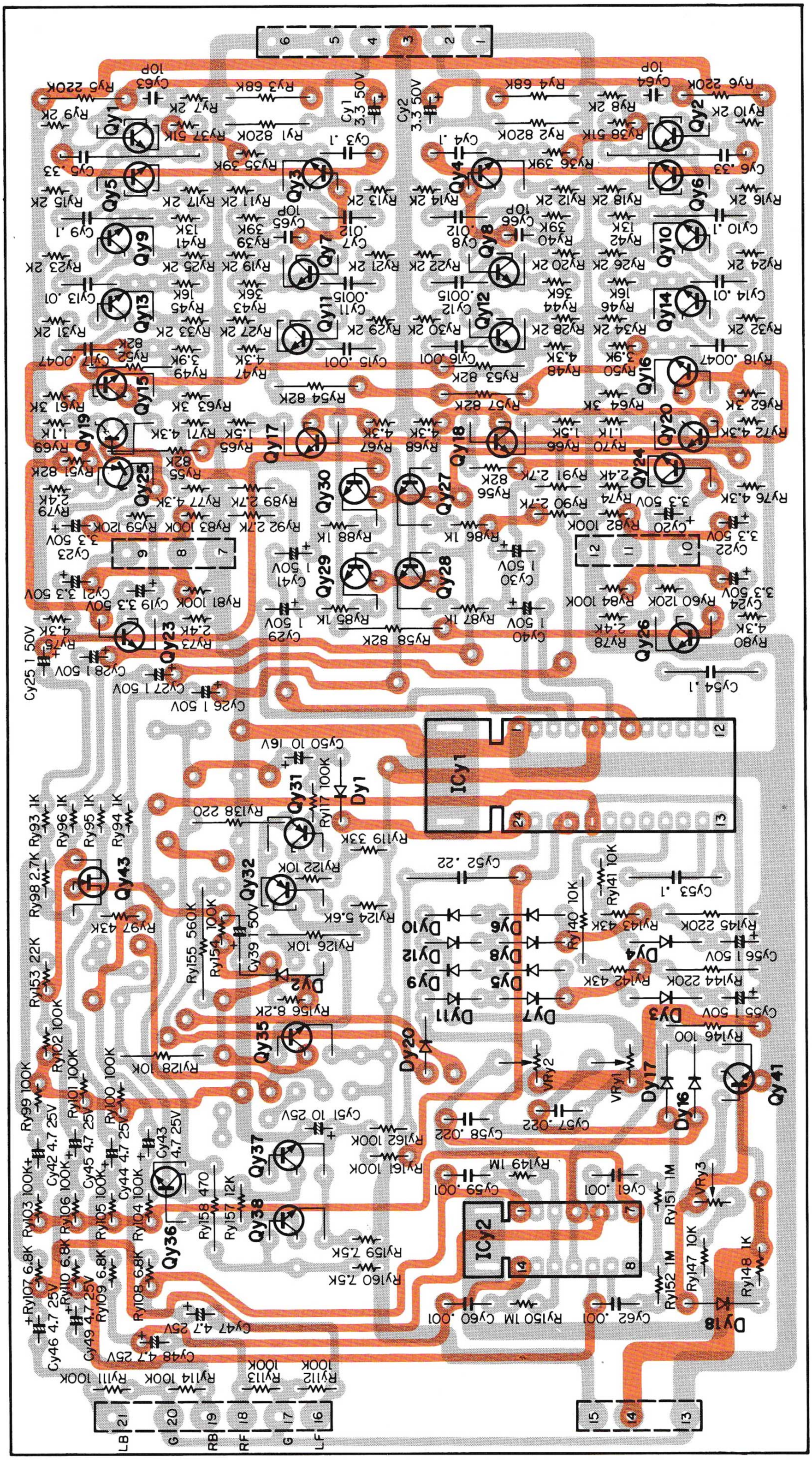

Qy1 ~ 18, 20, 23, 24, 26 ~ 30, 35 ~ 38, 41: 2SC1345(D) or (E) Qy19, 25, 31, 32: 2SA733 (Q) or (R) Qy43: 2SK40(C) or (D) ICy1: CX-049
ICy2: CX-718 Dy1 ~ 12, 20: 1S2076 Dy16 ~ 18: FQA01-08

www.hifiengine.com

SEMICONDUCTOR SUBSTITUTIONS

SEMICONDUCTOR NAME	SUBSTITUTIONS
POWER SUPPLY (X00-1590-10)	
2SA755(B) or (C)	2SA489(O) or (R)
2SC789(O) or (R)	2SC1061
2SC1000(BL)	2SC1345(E)
2SC1419(B) or (C)	2SC1061, 2SD234
TUNER (X05-1080-15)	
2SA733(Q) or (R)	2SA620WL(4) or (5)
2SC381(R)	2SC380, 2SC460, 2SC535, SE-3001
2SC458(D)	2SC1000(GR), 2SC1345(D)
2SC460(B)	—
2SC535(B)	2SC381(R)
2SC785(R)	—
2SC945(Q) or (R)	—
2SC1213A(C)	2SC734(Y), 2SC984(C)
2SK19(GR) or (BL)	3SK30(B) or (C)
TA7060P	—
MAIN AMP (X07-1230-13)	
2SA620WL(4) or (5)	2SA493(GR)
2SB536(L) or (M)	2SA653(L) or (M)
2SC983 (O)	2SC1451(G), (B) or (V)
2SD381(L) or (M)	2SC1161(L) or (M)
PREAMP (X08-1180-00)	
2SC1416(GR) or (BL)	2SC1000(GR) or (BL), 2SC1345(D) or (E)
2SC1416A(GR)	2SC1000(GR) or (BL), 2SC1345(D) or (E)

SEMICONDUCTOR NAME	SUBSTITUTIONS
TONE AMP (X11-1130-00)	
2SC1345(D) or (E)	2SC1000(GR) or (BL), 2SC1416
POWER SUPPLY & PROTECTION (X13-1560-10)	
2SA673A(C)	2SA743A(C)
2SC789(O) or (R)	2SC1061 (B) or (C)
2SC1000(BL)	2SC1000(E), 2SC1416A(BL)
2SC1213A(C)	2SC743, 2SC984, 2SC1212A
2SC1416(GR)	2SC1000(BL), 2SC1345(E)
2SC1451(G) or (B)	2SC983(O) or (Y)
PUSHBUTTON SW (X13-1570-11)	
2SC1345(D) or (E)	2SC1000(GR) or (BL), 2SC1416
CD-4 (X15-1120-06)	
2SC828A(Q) or (R)	2SC1000(GR) or (Y)
2SC828A(S)	2SC1000(GR), 2SC1345(D)
2SC1335(E)	2SC1000(BL), 2SC1345(E)
3SK30(A) or (B)	—
3SK30(A)	—
SL-24487 (CD-894K)	—
SQ/RM (X15-1170-00)	
2SA733(Q) or (R)	2SA620WL(4) or (5)
2SC1345(D) or (E)	2SC1000(GR) or (BL)
2SK40(C) or (D)	2SK30(Y) or (GR)
CX-049	—
CX-718	—

2SB536
2SD381

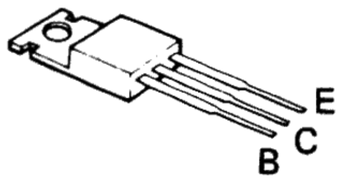

2SA673A
2SC1213A
2SC983

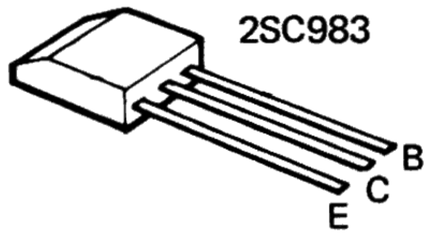

2SC1451

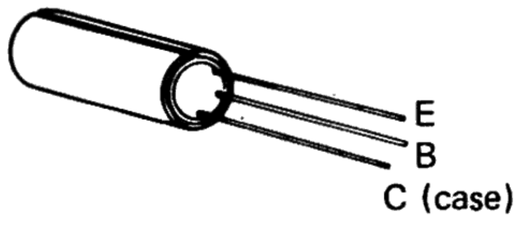

2SK40

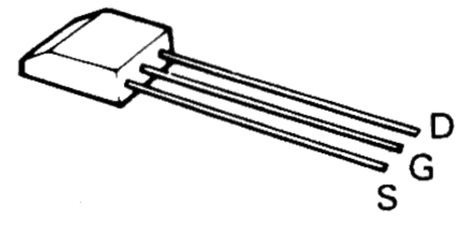

2SC1416



2SC458
2SC460
2SC535
2SC1335
2SC1345

2SC381R
2SC785R
2SC1000

2SA733
2SC828A
2SC945

2SD287



3SK30

2SA620WL

2SA755
2SC1419
2SC789

SL-24487

www.hifiengine.com

MODIFICATIONS SCHEMATIC

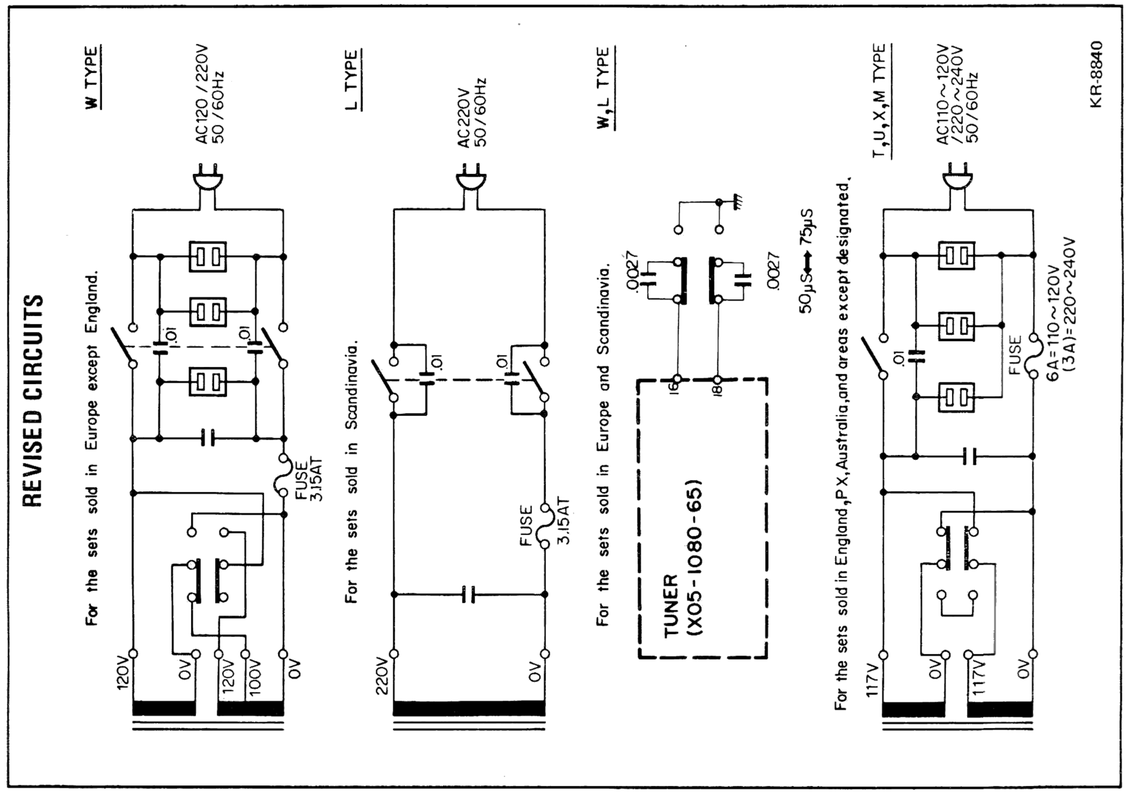

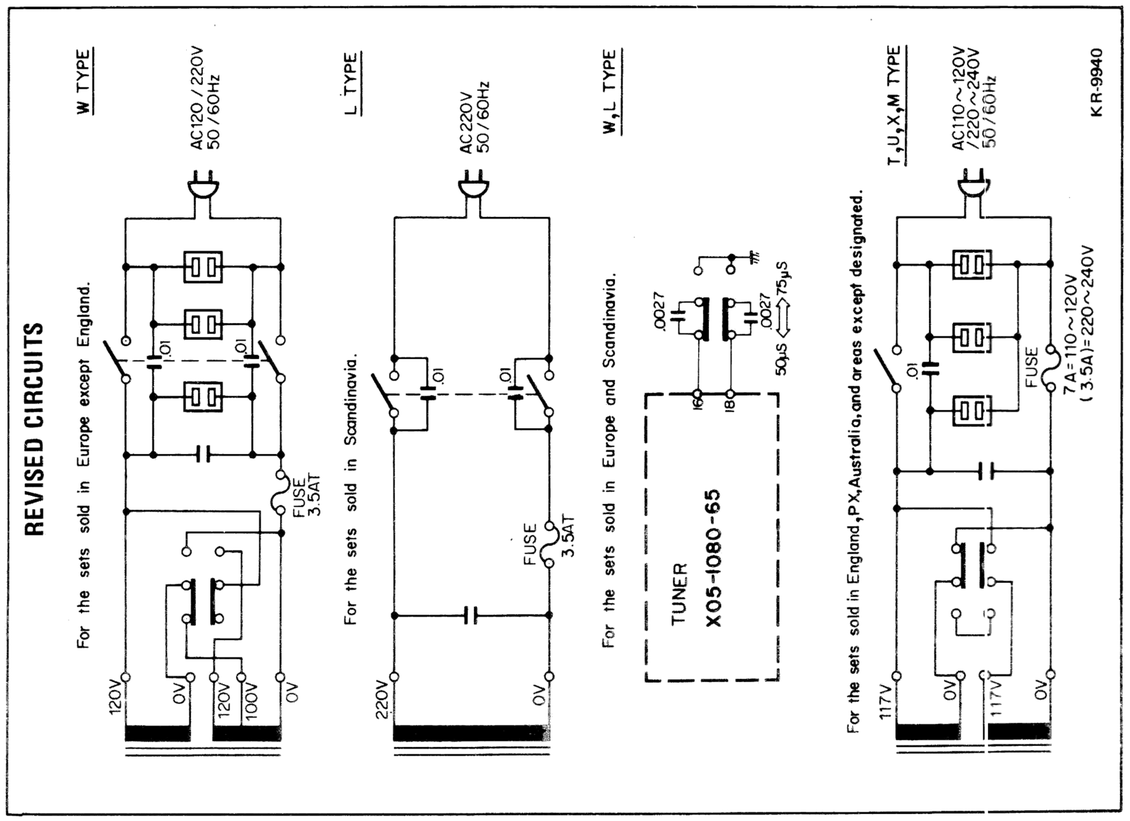

KR-9940, KR-8840 MODIFICATION POINTS

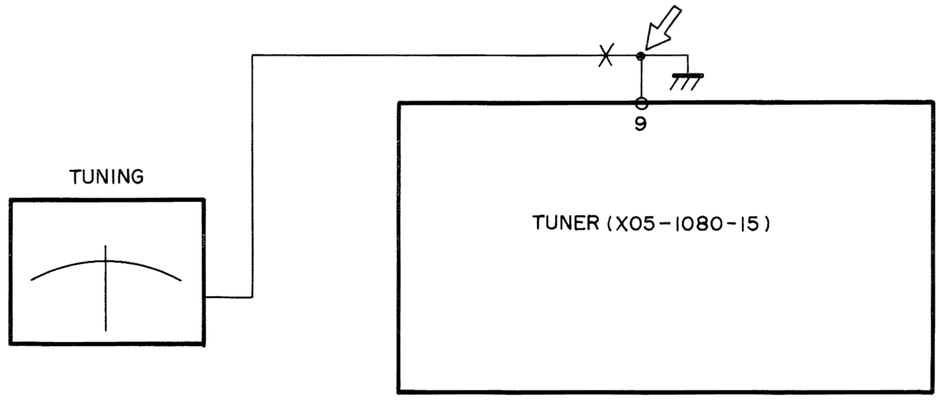

KR 8840 DOES NOT PROVIDE WITH T-METER

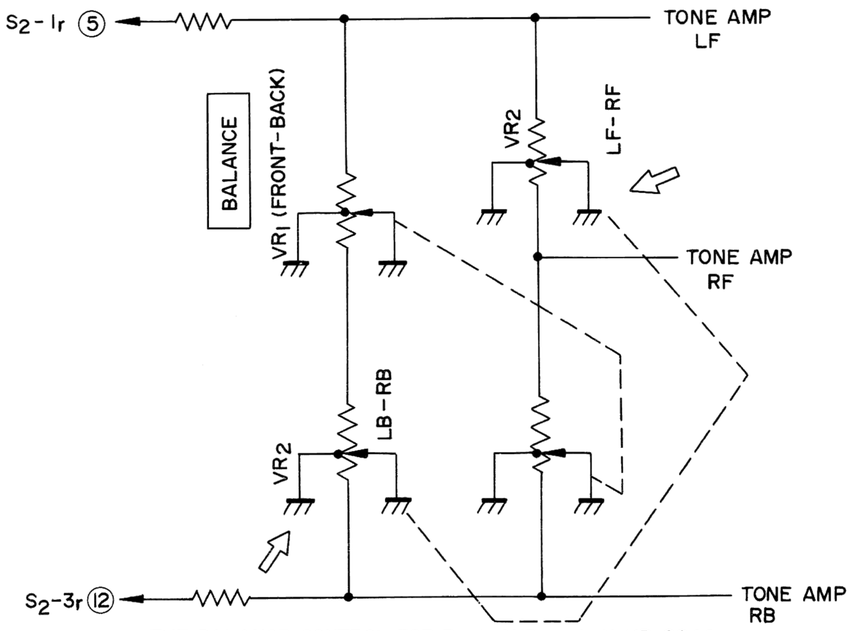

THE BALANCE CONTROL FOR R-ch AND L-ch IN KR-8840 IS FRICTION TYPE.

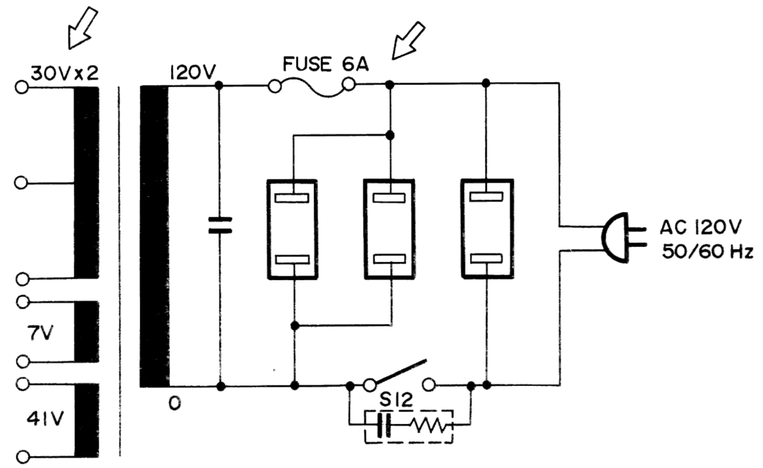

www.hifiengine.com

SCHEMATIC DIAGRAM

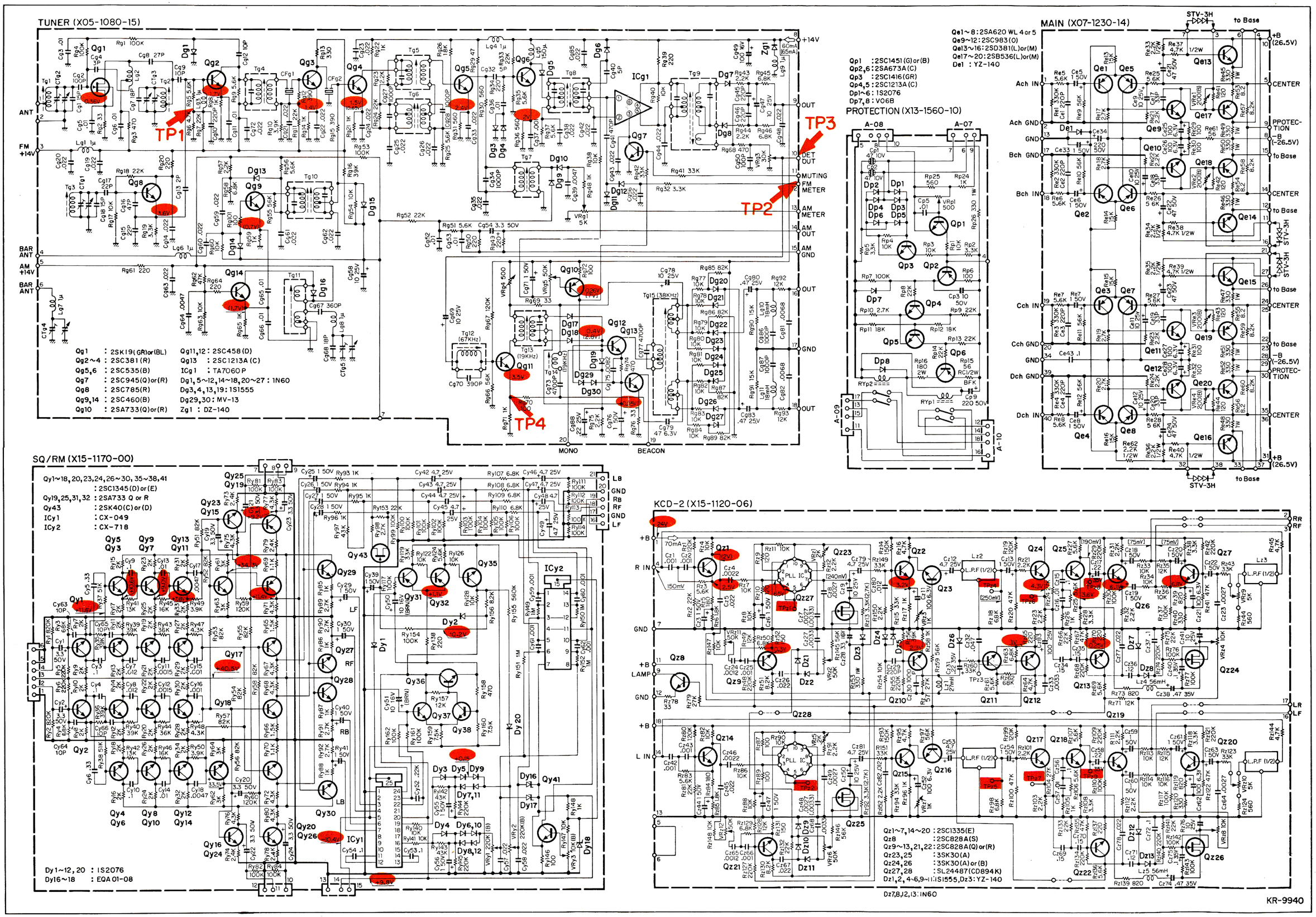

Caution: CX-718 for SQ full logic cricuit is high sensitivity FET IC. The unit shipped is shorted by "short holder". When replace it, with "IC short tool" take it off from short holder. Then before remove the "IC short tool" solder IC on the pc board. If not get "IC short tool", use the cotton glove during replacing.

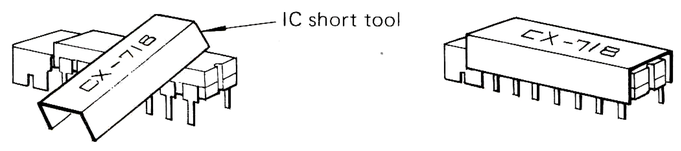

SCHEMATIC DIAGRAM

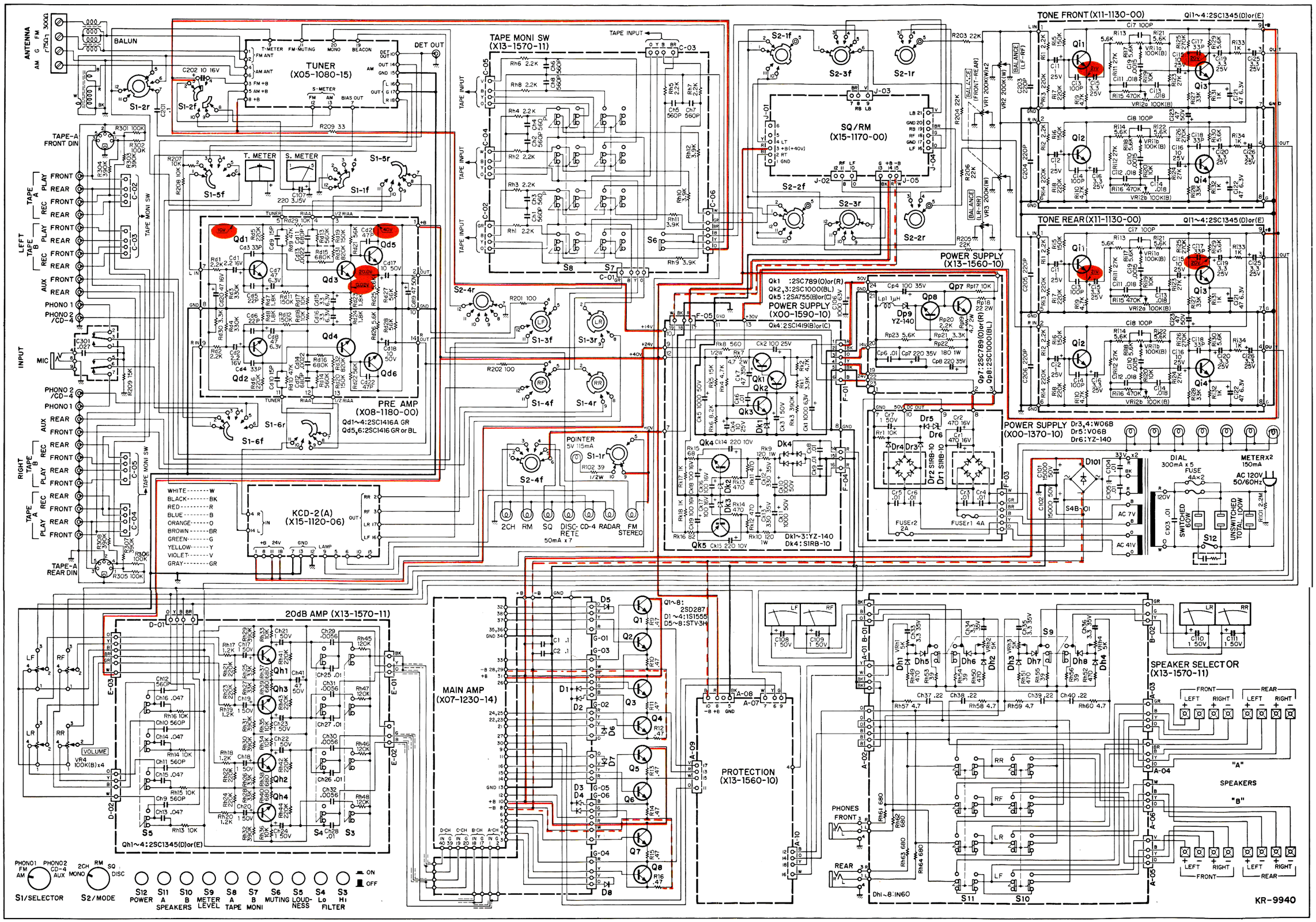

SPECIFICATIONS

FM TUNER SECTION

Usable Sensitivity (IHF)	1.8 μV (1.9 μV)
Quieting Slope	5 μV 50 dB KR-9940 only
Frequency Response	20 Hz ~ 15,000 Hz ± 1.2 dB
Harmonic Distortion	0.5% Mono (at 400 Hz 100% modulation)
	0.8% Stereo (at 400 Hz 100% modulation)
Signal to Noise Ratio	63 dB at 1 mV input
Image Rejection	60 dB
Selectivity (IHF ALT channel)	50 dB
IF Rejection	90 dB
Spurious Signal Rejection	90 dB
AM Suppression	60 dB
Capture Ratio	30 dB
Stereo Separation	40 dB at 1,000 Hz
	20 dB at 10,000 Hz
Sub Carrier Suppression	45 dB
Antenna Impedance	300 ohms Balanced and
	75 ohms Unbalanced

AM TUNER SECTION

Usable Sensitivity (IHF)	25 μV
Signal to Noise Ratio	45 dB at 1 mV input
Image Rejection	45 dB
Selectivity (IHF)	30 dB
IF Rejection	35 dB
Antenna	Built-in ferrite bar antenna
	External antenna terminals

POWER AMPLIFIER SECTION

RMS Power Output	
4 channels driven	50 watts x 4 into 8 ohms at
	(40 watts)
	20 Hz ~ 20,000 Hz
	52 watts x 4 into 8 ohms at 1,000 Hz
	(42 watts)
	58 watts x 4 into 4 ohms at 1,000 Hz
	(48 watts)
Dynamic Power Output	340 watts into 8 ohms
	(240 watts)
	440 watts into 4 ohms
	(300 watts)
Total Harmonic Distortion	0.5% at rated power into 8 ohms
	0.1% at 1/2 rated power
	into 8 ohms at 1,000 Hz
Inter Modulation Distortion	0.5% at rated power into 8 ohms
(60 Hz : 7 kHz = 4 : 1)	0.1% at 1/2 rated power into 8 ohms
Power Bandwidth	10 Hz ~ 45,000 Hz
	(10 Hz ~ 40,000 Hz)
Damping Factor	30 at 8 ohms
Speaker Impedance	Accept 4 ohms to 16 ohms

PRE-AMPLIFIER SECTION

Input Sensitivity and Impedance	
Phono 1	2.0 mV 100 K ohms
Phono 2	2.0 mV 100 K ohms
AUX	200 mV 50 K ohms
Tape Play A, B	200 mV 50 K ohms
Mic	2.5 mV 50 K ohms
Maximum Input Voltage (rms)	
Phono 1, 2	120 mV T.H.D. 0.5% at 1,000 Hz
Signals to noise Ratio (IHF A CURVE)	
Phono 1, 2	70 dB
AUX	80 dB
Tape Play A, B	80 dB
Mic	70 dB
Output Voltage and Impedance	
Tape Rec. A, B (pin)	200 mV 100 ohms
(Din connector)	40 mV
Frequency Response	
Phono 1, 2	RIAA Standard curve ±1.0 dB
AUX. Tape Play	20 Hz ~ 20,000 Hz ± 1.0 dB
Tone Control	
Bass	±10 dB at 100 Hz
Treble	±10 dB at 10,000 Hz
Loudness Control (−30 dB)	+8 dB at 100 Hz
	+6 dB at 10,000 Hz
Low Filter 100 Hz	−9 dB
High Filter 10,000 Hz	−9 dB

GENERAL

Switches	
Speaker Selector	A.B (push switch)
Input Selector	AM, FM, PHONO 1, PHONO 2, CD-4, AUX
Mode	MONO, 2 CH, RM, SQ LOGIC, DISCRETE
Tape Monitor	A, B (A → B DUBBING)
Others	MUTING, LOUDNESS, LOW FILTER, HIGH FILTER
AC Outlets	Switched 1, Unswitched 2
Power Consumption	730 watts at full power
	(640 watts) at full power
	61 watts at no signal
	(56 watts) at no signal
Dimension	W 21-1/32" (534 mm), H 6-3/8" (162 mm.)
	D 14-5/32" (360 mm)
Weights	46.2 lbs (21 kg)
	(44 lbs (20 kg))

( ) : KR-8840

www.hifiengine.com

KENWOOD ELECTRONICS, INC.

- 15777 SOUTH BROADWAY, GARDENA, CALIFORNIA 90248 U.S.A.
- 72-02 51ST AVENUE, WOODSIDE. N.Y. 11377 U.S.A.

TRIO-KENWOOD ELECTRONICS, N.V.

- HARENSESTEENWEG, 484. 1800 VILVOORDE,BELGIUM.

TRIO-KENWOOD ELECTRONICS, GmbH.

- 6056 HEUSENSTAMM, AM GOLDBERG 5, WEST GERMANY.

TRIO ELECTRONICS, INC.

- 3-6-17 AOBADAI, MEGURO-KU, TOKYO, JAPAN.

© 1974-9 PRINTED IN JAPAN B51-0301-00 (G) 3,300

www.hifiengine.com