STEREO SYNTHESIZER TUNER

KT-56/56L

SERVICE MANUAL

KENWOOD

© 1987-3 PRINTED IN JAPAN
B51-3188-00 (G) 2347

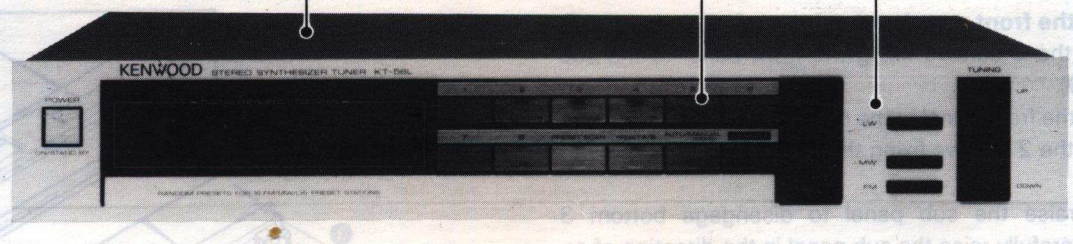

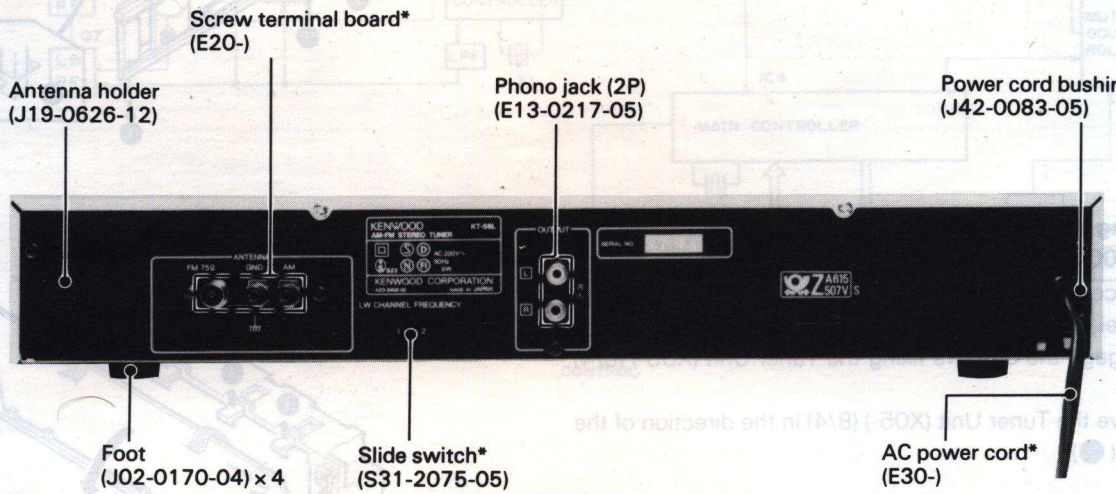

***Photo is KT-56L (Silver).**
Refer to parts list on page 26.

CONTENTS

DISASSEMBLY FOR REPAIR 2
BLOCK DIAGRAM 3
CIRCUIT DESCRIPTION 4
ADJUSTMENT 10
REGLAGE 11
ABGLEICH 12
PC BOARD 14
EXPLODED VIEW 25
PARTS LIST 26
SPECIFICATIONS 42

DISASSEMBLY FOR REPAIR

Removing the front panel and sub panel

1. Remove the 3 screws fixing the front panel to the sub panel (❶).
2. Remove the front panel in the direction of the arrow (❷).
3. Remove the 2 screws fixing the sub panel to the chassis (❸).
4. Slightly raise the sub panel to disengage bottom 3 claws. Carefully raise the sub panel in the direction of arrow (❹) to remove it while paying attention to the fluorescent tube display retaining section.

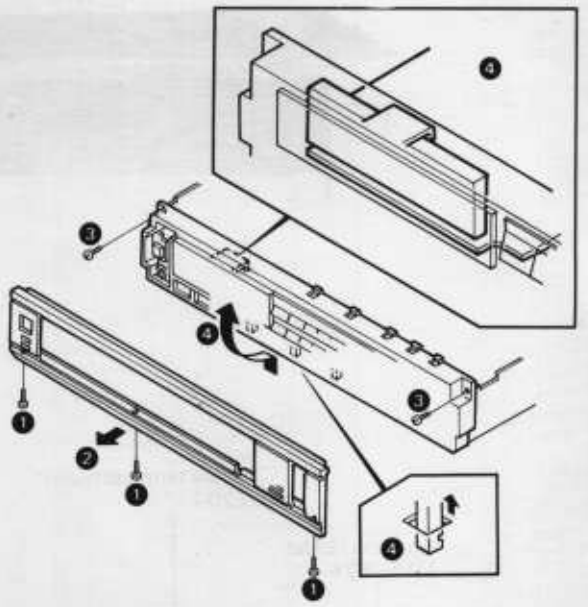

Removing the Tuner Unit
(X05-3300-10 or X05-3350-10) (B/4)

(This procedure can be carried out without removing the front panel.)

1. Disengage the 5 claws fixing the Tuner Unit (X05-) (B/4) (❶).
2. Remove the Tuner Unit (X05-) (B/4) in the direction of the arrow (❷).

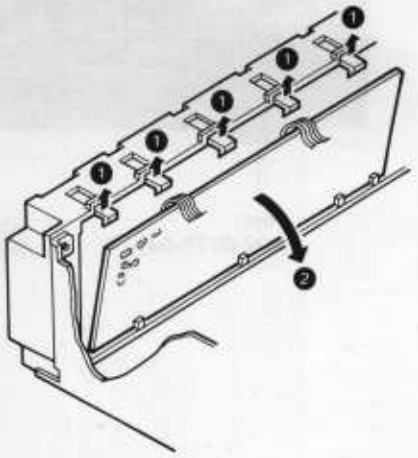

Removing the Tuner Unit
(X05-3290-10 or X05-3350-10) (A/4)

1. Remove the metallic cabinet before this operation.
2. Remove the 3 screws fixing the rear panel to the chassis, and remove the 3 screws fixing the Tuner Unit (X05-) (A/4) to the chassis (❶).
3. Remove the Tuner Unit (X05-) (A/4) together with the rear panel in the direction of the arrow (❷).

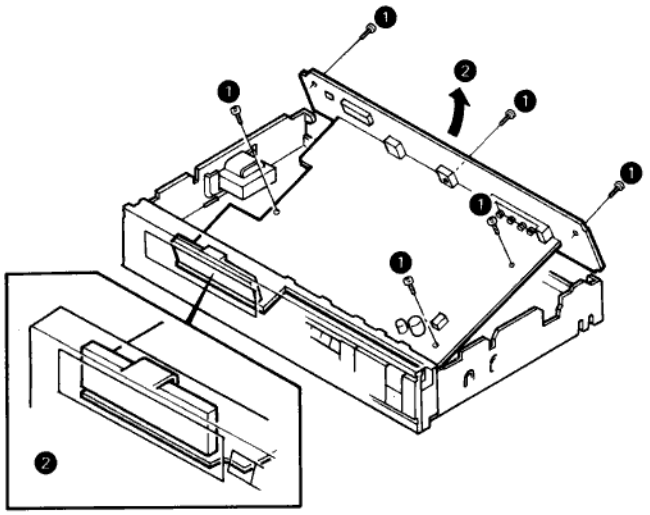

BLOCK DIAGRAM

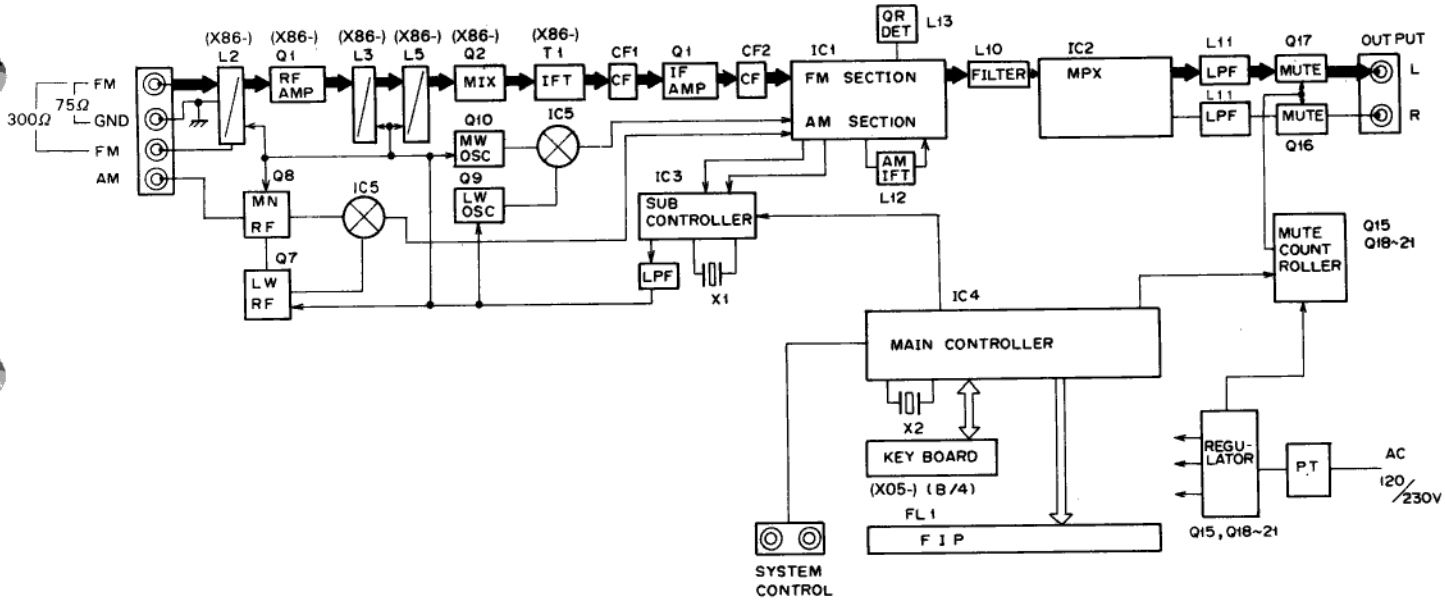

CIRCUIT DESCRIPTION

Function of components

Tuner unit (X05-3300-10 or X05-3350-10)

Components	Use/Function	Operation/Condition/Interchangeability
Q1	FM IF amp	10.7 MHz amplifier.
Q2, 3	L.P.F.	PLL low-pass filter.
Q4	L.P.F. switch	Time constant switching in LW reception.
Q5	L.P.F. control	Q4 control. LW position when switched ON.
Q6	AM/FM switch	IC1 mode switching. AM position when switched OFF.
Q7, 8	AM RF switch	LW/MW RF electronic switching.
Q9, 10	AM OSC switch	LW/MW OSC electronic switching.
Q11	Inverter amp	Auto stop control.
Q12	Buffer	Impedance switching.
Q13, 14	Tuner band switch	FM/AM mode switching.
Q15	Muting control	Operates during function switching.
Q16, 17	Muting switch	Muting during function switching.
Q18	Muting driver	Operates during function switching.
Q19	Constant voltage	Regulation of +12 V.
Q20	Muting control	Operates during function switching.
Q21	Muting control	Muting control when turning power OFF.
Q22	Power driver	+12 V power supply ON and OFF.
Q23	Power control	Power ON/OFF control.
Q24	Constant voltage	Stabilization of +5 V power, CE control.
Q25	Channel switch	FM-AM channel space switching, or LW channel switching.
Q26, 27	FL driver	FL tube display.
Q28	FL tube control	Supplies +5 V to Q29 and Q30 when power is turned ON.
Q29	FL driver	TUNED display.
Q30	FL driver	STEREO display.
Q31	Inverter amp	Inversion of MUTE signal.
IC1	FM/AM system IC	FM IF amplification, detection control. AM MIX, IF amplification, detection control.
IC2	MPX IC	MPX demodulation.
IC3	Frequency synthesizer PLL IC	PLL synthesizer.
IC4	4-bit microprocessor	Controller of PLL, display, etc.
IC5	Band switch IC	FM/MW/LW band switching.

IC2: AN7470

Equivalent block diagram

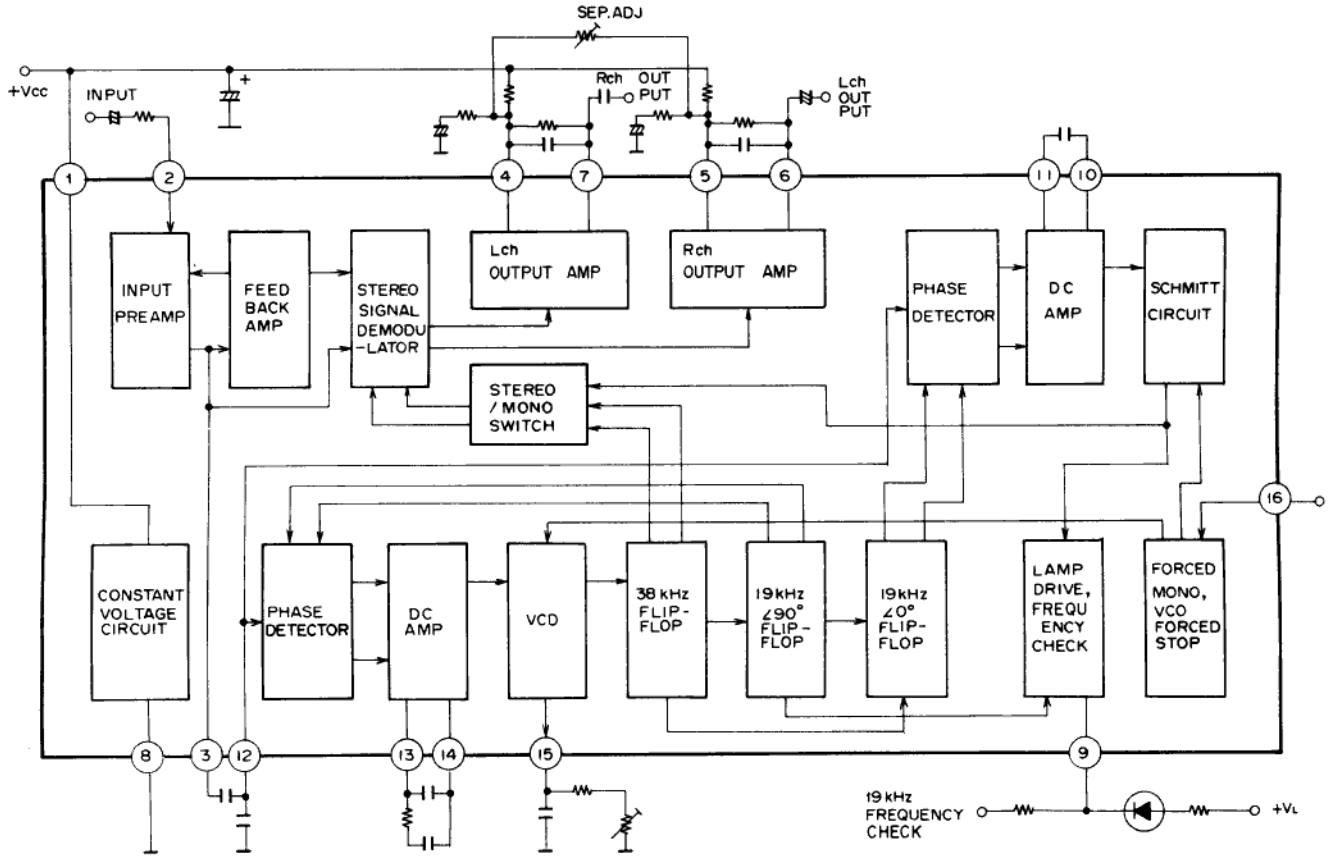

Terminal connection and functions

Terminal No.	Connection/Function
1	Supply voltage (+Vcc)
2	Stereo composite signal, input terminal
3	Input preamp, output terminal
4	L CH output amp, feedback terminal
5	R CH output amp, feedback terminal
6	R CH output amp, output terminal
7	L CH output amp, output terminal
8	Grounding terminal
9	Stereo display lamp drive and 19 kHz frequency check terminal
10	Stereo signal detector circuit, low-pass filter terminal
11	Stereo signal detector circuit, low-pass filter terminal
12	PLL circuit, input terminal
13	PLL circuit, low-pass filter terminal
14	PLL circuit, low-pass filter terminal
15	VCO freerun oscillation frequency adjustment terminal
16	Forced mono/forced VCO oscillation stop terminal

IC3: CX7925B
Block diagram and terminal configuration diagram

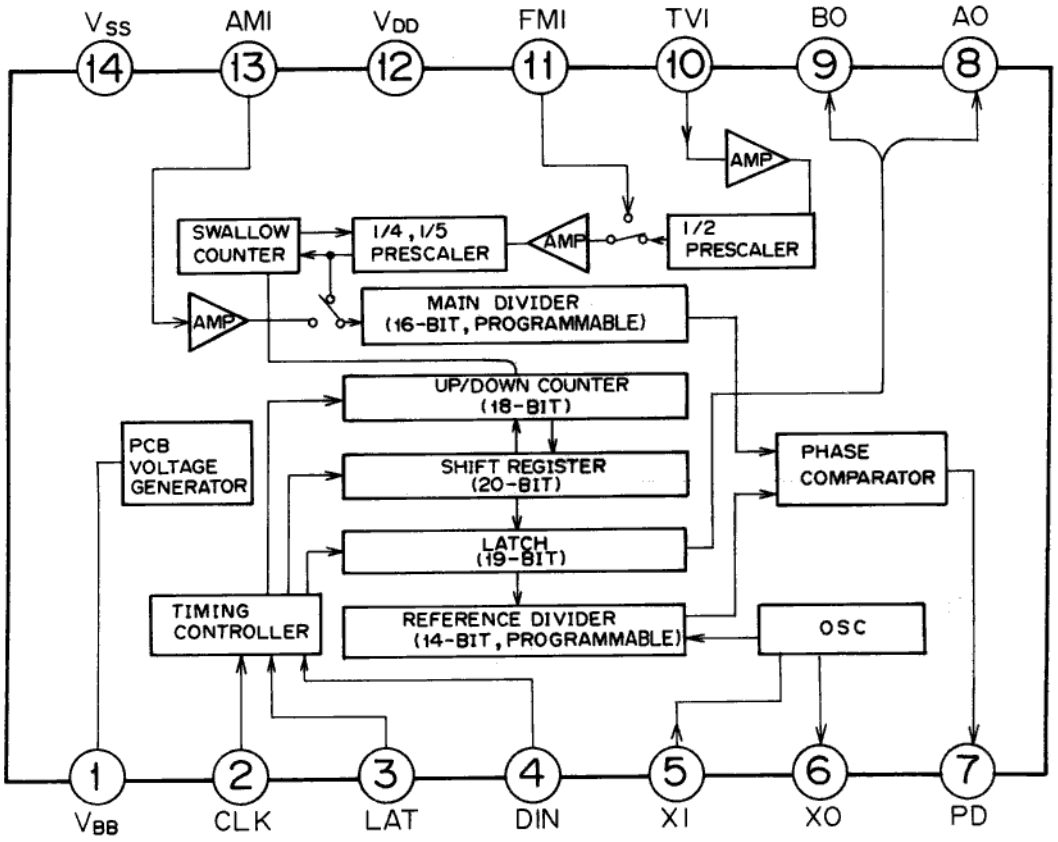

Terminal description

Terminal No.	Symbol	Terminal Description
1	V_{BB}	PCB terminal (Connect a 0.01 μF capacitor between the GND).
2	CLK	Input terminal for the clock used for 20-bit serial data input (Shifted at the rise).
3	LAT	Input terminal for the shift register input data latch signal (shifted at the rise) and, at the same time, for the Up/Down clock (status changed at the rise).
4	DIN	Data input terminal, also the Up/Down mode switching terminal (Up mode with "H" level, Down mode with "L" level).
5	XI	Connection terminals for the reference signal generator X'tal oscillator. (Max. 13 MHz, standard 4.0 MHz)
6	XO	
7	PD	Phase comparator output terminal (3-state).
8	AO	External control signal output terminal/Unlock signal output terminal (E/E MOS push-pull).
9	BO	External control signal output terminal/data check terminal (E/E MOS push-pull).
10	TVI	High-frequency signal input terminal (300 MHz or 350 MHz max.). With 1/2 prescaler.
11	FMI	High-frequency signal input terminal (150 MHz or 180 MHz max.).
12	V_{DD}	Power supply (+5V).
13	AMI	High-frequency signal input terminal (40 MHz or 50 MHz max.).
14	V_{SS}	Grouding terminal

IC4: μPD 7538AC-041

Terminal connection diagram (Top view)

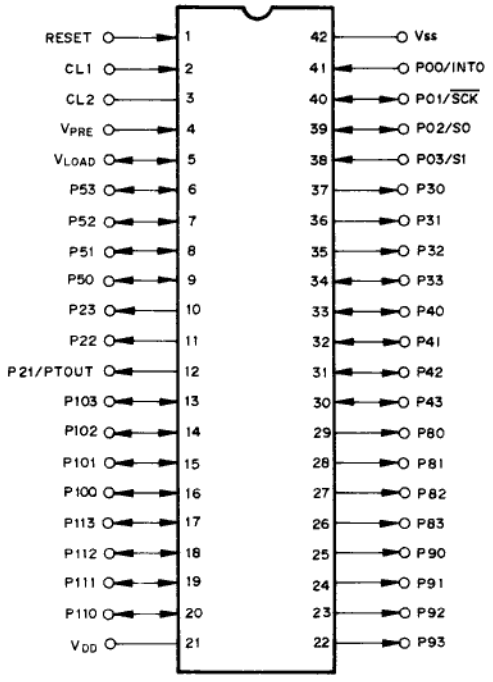

Block diagram

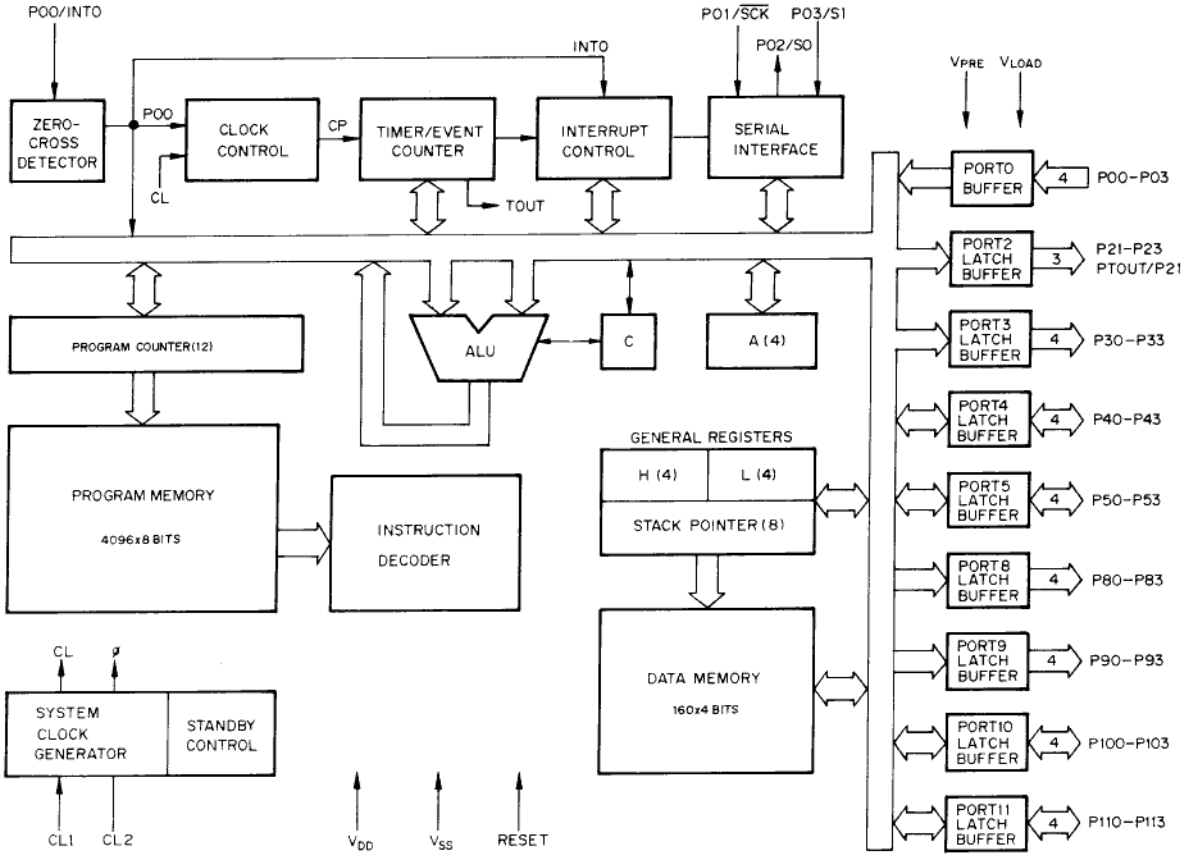

Terminal description

Terminal name	Input/Output	Function	After RESET
P00/INT0	Input	4-input terminals of Port 0 (4-bit input port). Also used for the external interrupt input with rising-edge active (INT 0), zero-cross detection input and serial clock input/output (SCK), serial data output (SO), and serial data input (SI).	Input
P01/$\overline{SCK}$	Input/Output		
P02/SO	Input/Output		
P03/SI	Input		
P21/PTOUT	Output	3-bit high withstanding voltage output terminals of Port 2 (3-bit output port). Also used for TOUT output (PTOUT).	Low output when a pull-down resistor is provided, and high-impedance output with an open-drain output.
P22, P23			
P30 – P33	Output	4-bit high withstanding voltage output terminals of Port 3 (4-bit output port).	
P40 – P43	Input/Output	4-bit high withstanding voltage input/output terminals of Port 4 (4-bit input/output port).	
P50 – P53	Input/Output	4-bit high withstanding voltage input/output terminals of Port 5 (4-bit input/output port).	
P80 – P83	Output	4-bit high withstanding voltage, large-current output terminals of Port 8 (4-bit output port). Bit set/reset possible using the SPBL and RPBL commands.	
P90 – P93	Output	4-bit high withstanding voltage, large-current output terminals of Port 9 (4-bit output port). Bit set/reset possible using the SPBL and RPBL commands.	
P100 – P103	Input/Output	4-bit high withstanding voltage, large-current input/output terminals of Port 10 (4-bit input/output port). Bit set/reset possible using the SPBL and RPBL commands.	
P110 – P113	Input/Output	4-bit high withstanding voltage, large-current input/output terminals of Port 11 (4-bit input/output port). Bit set/reset possible using the SPBL and RPBL commands.	
CL 1 – CL 2		Connection terminals for ceramic oscillator. CL 1 is used for external clock input.	
RESET	Input	Reset input terminal.	
VPRE		Negative power supply terminal for high withstanding voltage predriver. (For Ports 2 – 5 and 8 – 11)	
VLOAD		Negative power supply terminal for the optional load resistor of high withstanding voltage predriver. (For Ports 2 – 5 and 8 – 11)	
VDD		Positive power supply terminal.	
VSS		GND potential terminal.	

Notes:

1. For the output driver for Ports 2 – 5 and 8 – 11, the opendrain output or pull-down resistor (load resistance) can be selected as the mark option. The VLOAD power supply is used when the pull-down resistor is used.
2. Ports 2 – 5 are for as the FL display tube segment signal outputs, and Port 8 – 11 are for the FL display tube digit signal outputs.
3. As Ports 8 – 11 have the capacity to drive large current, they can be used for direct drive of LEDs.

Clear function of microprocessor IC4

To reset the microprocessor IC4, reconnect the power cord while pressing the MEMORY button.

Operation of mioroprocessor IC4 at power ON

When voltage VDD at pin ㉑ (power supply) of IC4 is rises at power ON and the reset signal at pin ❶ differentiated by CE signal (Chip Enable signal) at pin ⑱ rises to half of VDD, the clock starts. When the reset signal lowers to half of the VDD, the microprocessor starts operating and the unit is set to normal operation mode.

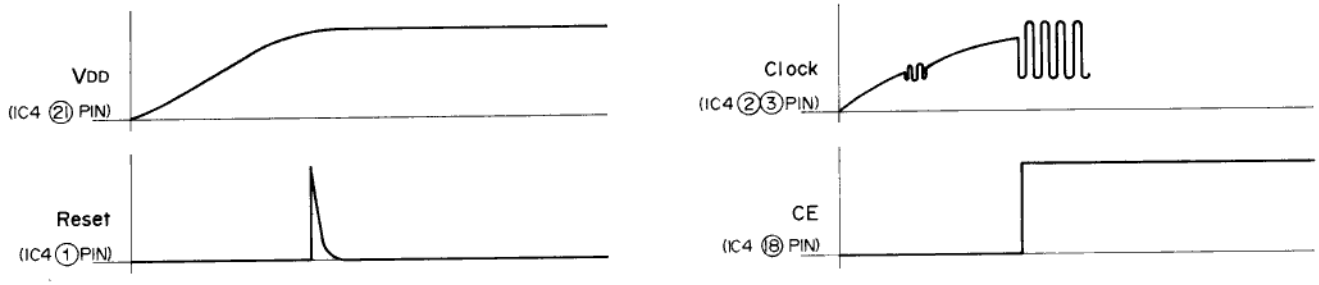

Fluorescent indicator tube FL1: F1P8BRM7 (X05-3300-10)
Terminal connection

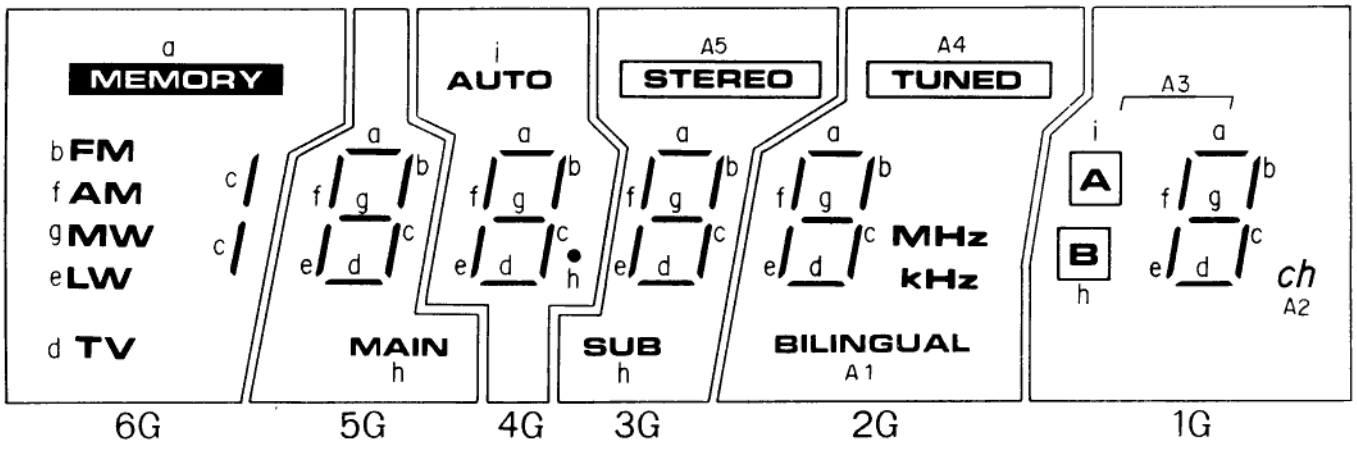

Terminal No. / Electrode	1 F	2 F	3 6G	4 NP	5 NP	6 6G	7 P(A5)	8 P(A4)	9 5G	10 P(A3)	11 P(A2)	12 4G	13 P(A1)	14 3G	15 P(i)					
Terminal No. / Electrode						16 P(h)	17 P(g)	18 2G	19 P(f)	20 P(e)	21 2G	22 P(d)	23 1G	24 P(c)	25 P(b)	26 P(a)	27 1G	28 NP	29 F	30 F

Notes F: Filament P: Anode
G: Grid NP: No pin

ADJUSTMENT/REGLAGE/ABGIEICH

System connections

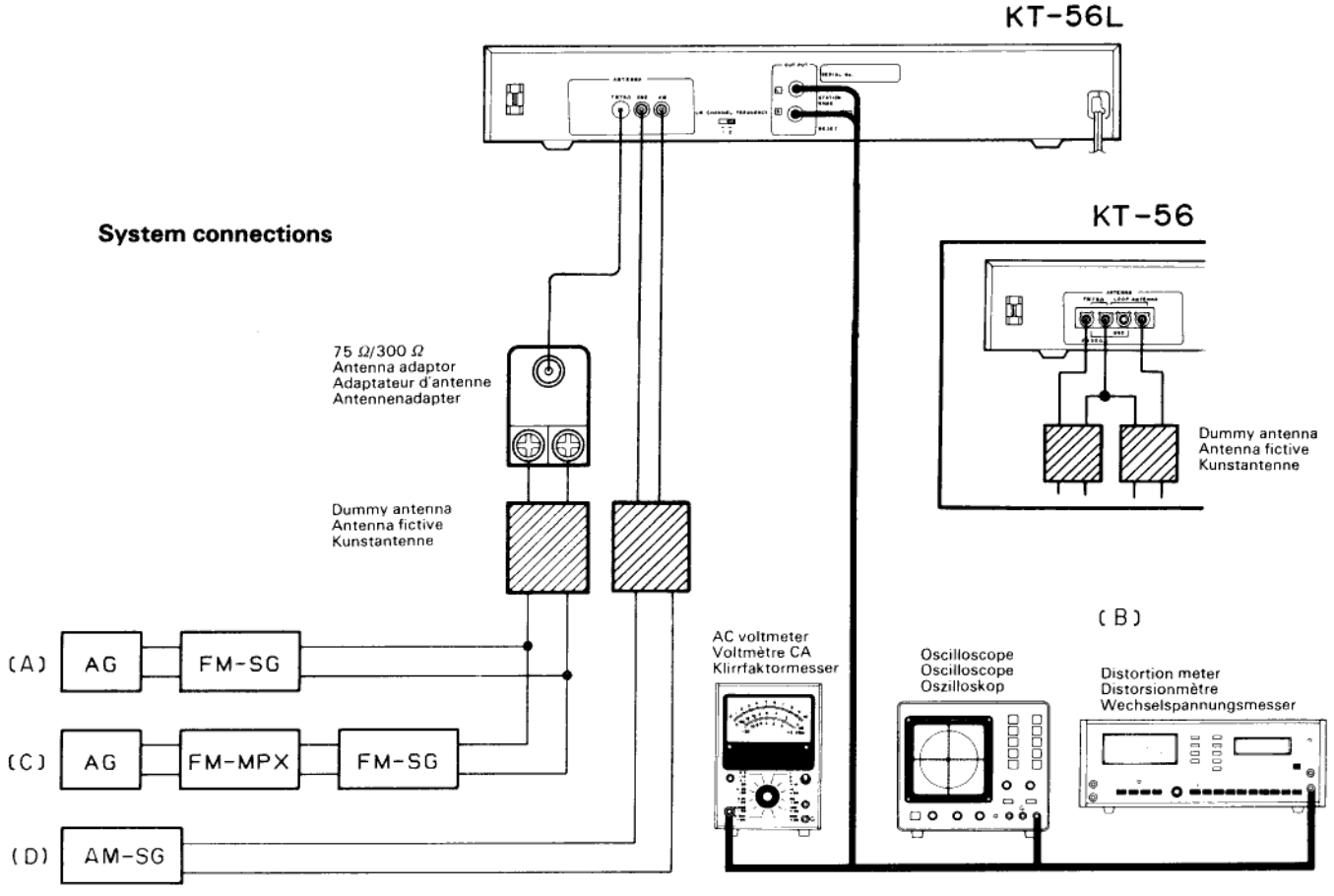

ADJUSTMENT

No.	ITEM	INPUT SETTINGS	OUTPUT SETTINGS	TUNER SETTINGS	ALIGNMENT POINTS	ALIGN FOR	FIG.
FM SECTION		Unless otherwise specified, the individual switches should be set as following: SELECTOR: FM MODE: FM MODE/AUTO					
1	BAND EDGE (1)	–	Connect a DC voltmeter between TP20(VT) and TP21(GND).	87.5MHz	Front end L7	2.5V	(a)
2	BAND EDGE (2)	–	Connect a DC voltmeter between TP20(VT) and TP21(GND).	108.0MHz	Front end TC1	8.0V	(a)
		Repeat alignments 1 and 2 several times.					
3	RF ALIGNMENT	(A) 98.0MHz 1kHz, ±75kHz dev	(B)	MONO 98.0MHz	Front end L2, 3, 5 *	Maximum amplitude and symmetry of the oscilloscope display.	
4	DISCRIMINATOR	(A) 98.0MHz 1kHz, ±75kHz dev 60dBμ(ANT input)	Connect a DC voltmeter between TP18 and TP19.	MONO 98.0MHz	L13	0V	(b)
5	VCO	(A) 98.0MHz 0 dev 60dBμ(ANT input)	Connect a 330kΩ resistor to TP14. Connect a frequency counter to the resistor via an AC voltmeter.	98.0MHz	VR2	19.00kHz	(c)
6	SEPARATION (STEREO)	(C) 98.0MHz 1kHz, ±68.25kHz dev Selector:L or R 60dBμ(ANT input)	(B)	98.0MHz	Front end T1	Minimum crosstalk.	
AM-MW SECTION			Keep the AM loop antenna installed.		SELECTOR: AM(KT-56) or MW(KT-56L)		
(1)	BAND EDGE (1)	–	Connect a DC voltmeter between TP20(VT) and TP21(GND).	530kHz (531kHz)	L5	1.5V	(a)
(2)	BAND EDGE (2)	–	Connect a DC voltmeter between TP20(VT) and TP21(GND).	1610kHz (1602kHz)	TC4	8.0V	(a)
		Repeat alignments (1) and (2) several times.					
(3)	RF ALIGNMENT (1)	(D) 630kHz 400Hz, 30% mod	(B)	630kHz	L3	Maximum amplitude and symmetry of the oscilloscope display.	
(4)	RF ALIGNMENT (2)	(D) 1440kHz 400Hz, 30% mod	(B)	1440kHz	TC2	Maximum amplitude and symmetry of the oscilloscope display.	
		Repeat alignments (3) and (4) several times.					
AM-LW SECTION(KT-56L only)			Keep the AM loop antenna installed.		SELECTOR: LW		
(5)	BAND EDGE (1)	–	Connect a DC voltmeter between TP20(VT) and TP21(GND).	153kHz	L4	1.5V	(a)
(6)	BAND EDGE (2)	–	Connect a DC voltmeter between TP20(VT) and TP21(GND).	281kHz	TC3	8.0V	(a)
		Repeat alignments (5) and (6) several times.					
(7)	RF ALIGNMENT (1)	(D) 162kHz 400Hz, 30% mod	(B)	162kHz	L2	Maximum amplitude and symmetry of the oscilloscope display.	
(8)	RF ALIGNMENT (2)	(D) 270kHz 400Hz, 30% mod	(B)	270kHz	TC1	Maximum amplitude and symmetry of the oscilloscope display.	
		Repeat alignments (7) and (8) several times.					

* L5: KT-56L only.

REGLAGE

N°	ITEM	REGLAGE DE L'ENTREE	REGLAGE DE LA SORTIE	REGLAGE DU TUNER	POINT DE L'ALIGNEMENT	ALIGNER POUR	FIG.
SECTION MF		Sauf en cas d'indications spéciales, régler chaque commutateur comme suit: SELECTEUR: FM MODE: FM MODE/AUTO					
1	BORD DE BANDE (1)	–	Relier un voltmètre CC entre les TP20(VT) et TP21(GND).	87,5MHz	Contrôle L7	2,5V	(a)
2	BORD DE BANDE (2)	–	Relier un voltmètre CC entre les TP20(VT) et TP21(GND).	108,0MHz	Contrôle TC1	8,0V	(a)
Répéter les points 1 et 2 plusieurs fois.							
3	ALIGNEMENT HT	(A) 98,0MHz 1kHz.±75kHz dév	(B)	MONO 98,0MHz	Contrôle L2, 3, 5 *	Amplitude et symétrie maximale de l'affichage de l'oscilloscope.	
4	DISCRIMINATEUR	(A) 98,0MHz 1kHz.±75kHz dév 60dBμ(Entrée ANT)	Relier un voltmètre CC entre les TP18 et TP19.	MONO 98,0MHz	L13	0V	(b)
5	VCO	(A) 98,0MHz 0 dév 60dBμ(Entrée ANT)	Relier une résistance de 330kΩ à TP14. Raccorder un compteur de fréquence à une résistance par l'intermédiaire d'un voltmètre CA.	98,0MHz	VR2	19,00kHz	(c)
6	SEPARATION (STEREO)	(C) 98,0MHz 1kHz.±68,25kHz dév Selection:L ou R 60dBμ(Entrée ANT)	(B)	98,0MHz	Contrôle T1	Diaphonie minimale.	
SECTION MA		Laisser l'antenne bouche MA installée. SELECTEUR: AM(KT-56) ou MW(KT-56L)					
(1)	BORD DE BANDE (1)	–	Relier un voltmètre CC entre les TP20(VT) et TP21(GND).	530kHz (531kHz)	L5	1,5V	(a)
(2)	BORD DE BANDE (2)	–	Relier un voltmètre CC entre les TP20(VT) et TP21(GND).	1610kHz (1602kHz)	TC4	8,0V	(a)
Répéter les points (1) et (2) plusieurs fois.							
(3)	ALIGNEMENT HT (1)	(D) 630kHz 400Hz.30% mod	(B)	630kHz	L3	Amplitude et symétrie maximale de l'affichage de l'oscilloscope.	
(4)	ALIGNEMENT HT (2)	(D) 1440kHz 400Hz.30% mod	(B)	1440kHz	TC2	Amplitude et symétrie maximale de l'affichage de l'oscilloscope.	
Répéter les points (3) et (4) plusieurs fois.							
SECTION GO(KT-56L seulement)		Laisser l'antenne bouche MA installée. SELECTEUR: LW					
(5)	BORD DE BANDE (1)	–	Relier un voltmètre CC entre les TP20(VT) et TP21(GND).	153kHz	L4	1,5V	(a)
(6)	BORD DE BANDE (2)	–	Relier un voltmètre CC entre les TP20(VT) et TP21(GND).	281kHz	TC3	8,0V	(a)
Répéter les points (5) et (6) plusieurs fois.							
(7)	ALIGNEMENT HT (1)	(D) 162kHz 400Hz.30% mod	(B)	162kHz	L2	Amplitude et symétrie maximale de l'affichage de l'oscilloscope.	
(8)	ALIGNEMENT HT (2)	(D) 270kHz 400Hz.30% mod	(B)	270kHz	TC1	Amplitude et symétrie maximale de l'affichage de l'oscilloscope.	
Répéter les point (7) et (8) plusieurs fois.							

* L5: KT-56L seulement.

ABGLEICH

NR.	GEGENSTAND	EINGANGS-EINSTELLUNG	AUSGANGS-EINSTELLUNG	TUNER-EINSTELLUNG	ABGLEICH-PUNKTE	ABGLEICHEN FÜR	ABB.
UKW-EMPFANGSABTEILUNG Außer wenn anders angegeben, die verschiedenen Schalter wie folgt einstellen: SELECTOR: FM MODE:FM MODE/AUTO							
1	BANDKANTE (1)	–	Einen Gleichspannungsmesser zwischen TP20(VT) und TP21(GND) anschließen.	87,5MHz	Eingangsstufe L7	2,5V	(a)
2	BANDKANTE (2)	–	Einen Gleichspannungsmesser zwischen TP20(VT) und TP21(GND) anschließen.	108,0MHz	Eingangsstufe TC1	8,0V	(a)
Abstimmungen 1 und 2 mehrere Male wiederholen.							
3	EMPFANGS-BEREICH-ABSTIMMUNGEN	(A) 98,0MHz 1kHz.±75kHz Hub	(B)	MONO 98,0MHz	Eingangsstufe L2,3,5*	Maximal Amplitude und Symmetrie des Oszilloskopbildes.	
4	DISKRIMINATOR	(A) 98,0MHz 1kHz.±75kHz Hub 60dBμ(ANT Eingang)	Einen Gleichspannungsmesser zwischen TP18 und TP19 anschließen.	MONO 98,0MHz	L13	0V	(b)
5	SPANNUNGS-GEREGELTER OSZILLATOR	(A) 98,0MHz 0 Hub 60dBμ(ANT Eingang)	Einen 330kΩ Widerstanden zu TP14 anschließen. Einen Frequenzzähler über einen Wechselspannungsmesser an den Widerstand anschließen.	98,0MHz	VR2	19,00kHz	(c)
6	STEREO KANAL TRENNUNG	(C) 98,0MHz 1kHz.±68,25kHz Hub Wähler: L oder R 60dBμ(ANT-Eingang)	(B)	98,0MHz	Eingangsstufe T1	Minimal Übersprechen.	
MW-EMPFANGSABTEILUNG Die MW-Rahmenantenne angebracht lassen. SELECTOR: AM(KT-56) oder MW(KT-56L)							
(1)	BANDKANTE (1)	–	Einen Gleichspannungsmesser zwischen TP20(VT) und TP21(GND) anschließen.	530kHz (531kHz)	L5	1,5V	(a)
(2)	BANDKANTE (2)	–	Einen Gleichspannungsmesser zwischen TP20(VT) und TP21(GND) anschließen.	1610kHz (1602kHz)	TC4	8,0V	(a)
Abstimmungen (1) und (2) mehrere Male wiederholen.							
(3)	HF-ABGLEICH (1)	(D) 630kHz 400Hz.30% mod	(B)	630kHz	L3	Maximal Amplitude und Symmetrie des Oszilloskopbildes.	
(4)	HF ABGLEICH (2)	(D) 1440kHz 400Hz.30% mod	(B)	1440kHz	TC2	Maximal Amplitude und Symmetrie des Oszilloskopbildes.	
Abstimmungen (3) und (4) mehrere Male wiederholen.							
LW-EMPFANGSABTEILUNG(nur KT-56L) Die MW-Rahmenantenne angebracht lassen. SELECTOR: LW							
(5)	BANDKANTE (1)	–	Einen Gleichspannungsmesser zwischen TP20(VT) und TP21(GND) anschließen.	153kHz	L4	1,5V	(a)
(6)	BANDKANTE (2)	–	Einen Gleichspannungsmesser zwischen TP20(VT) und TP21(GND) anschließen.	281kHz	TC3	8,0V	(a)
Abstimmungen (5) und (6) mehrere Male wiederholen.							
(7)	HF-ABGLEICH (1)	(D) 162kHz 400Hz.30% mod	(B)	162kHz	L2	Maximal Amplitude und Symmetrie des Oszilloskopbildes.	
(8)	HF-ABGLEICH (2)	(D) 270kHz 400Hz.30% mod	(B)	270kHz	TC1	Maximal Amplitude und Symmetrie des Oszilloskopbildes.	
Abstimmungen (7) und (8) mehrere Male wiederholen.							

* L5: nur KT-56L.

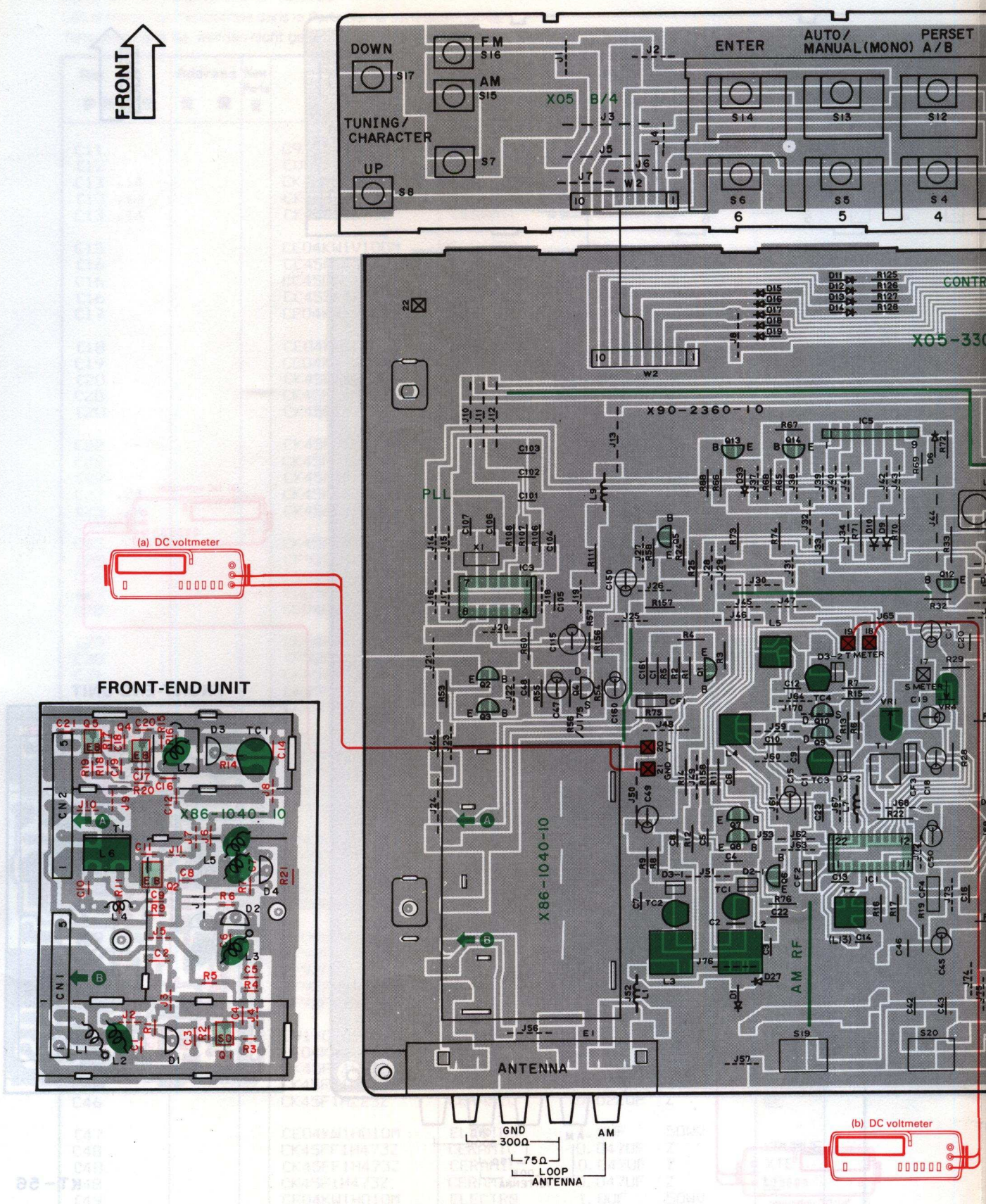
FRONT
DOWN
FM
AM
TUNING/
CHARACTER
UP
ENTER
AUTO/
MANUAL(MONO)
PERSET
A/B
X05 B/4
X90-2360-10
X86-1040-10
PLL
AM RF
ANTENNA
GND
300Ω
75Ω
LOOP
ANTENNA
AM
(a) DC voltmeter
(b) DC voltmeter
FRONT-END UNIT
X86-1040-10

PC BOARD

COMPONENT SIDE VIEW

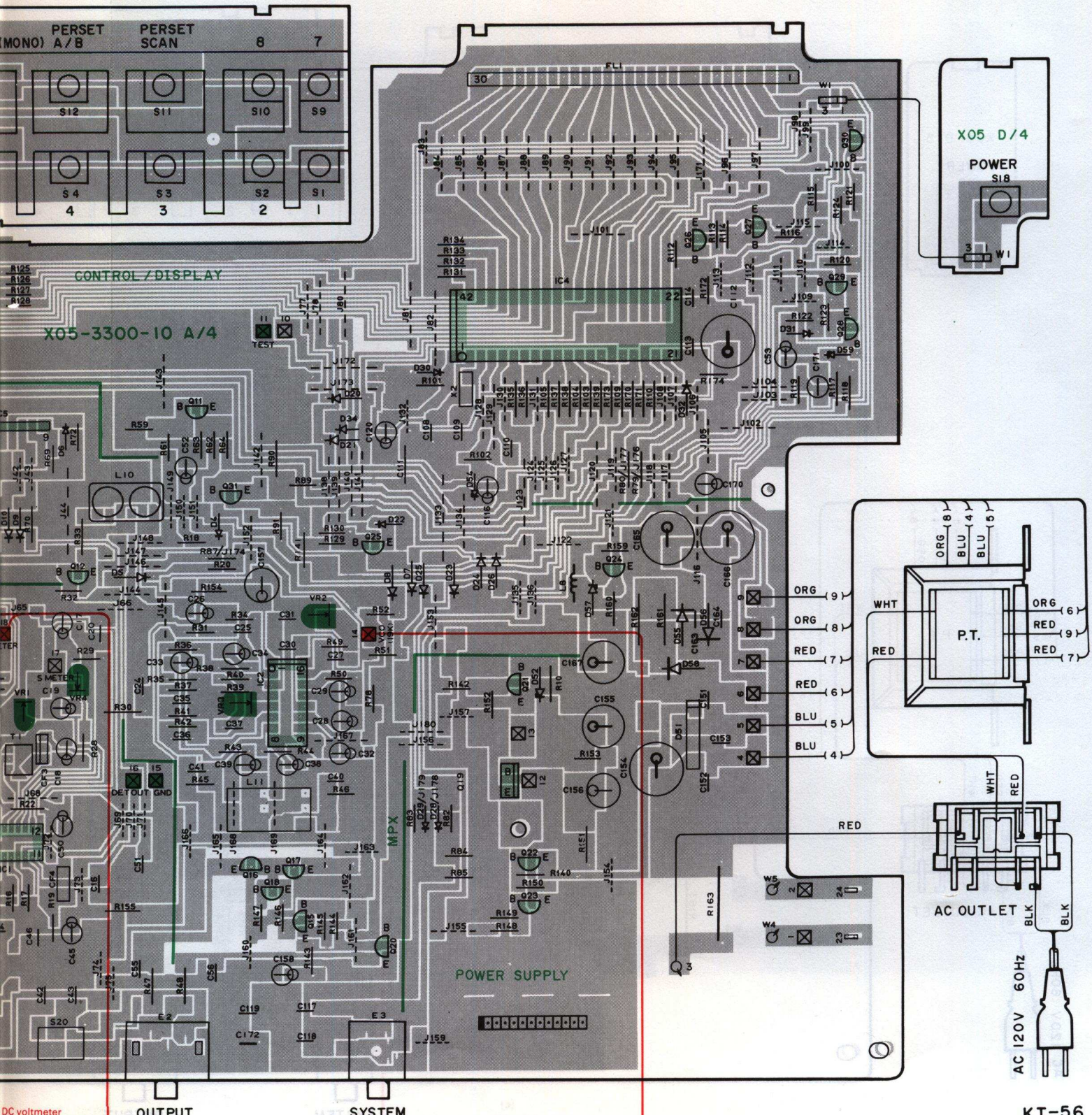

KT-56

Refer to the schematic diagram for the values of resistors and capacitors.

PC BOARD

FOIL SIDE VIEW

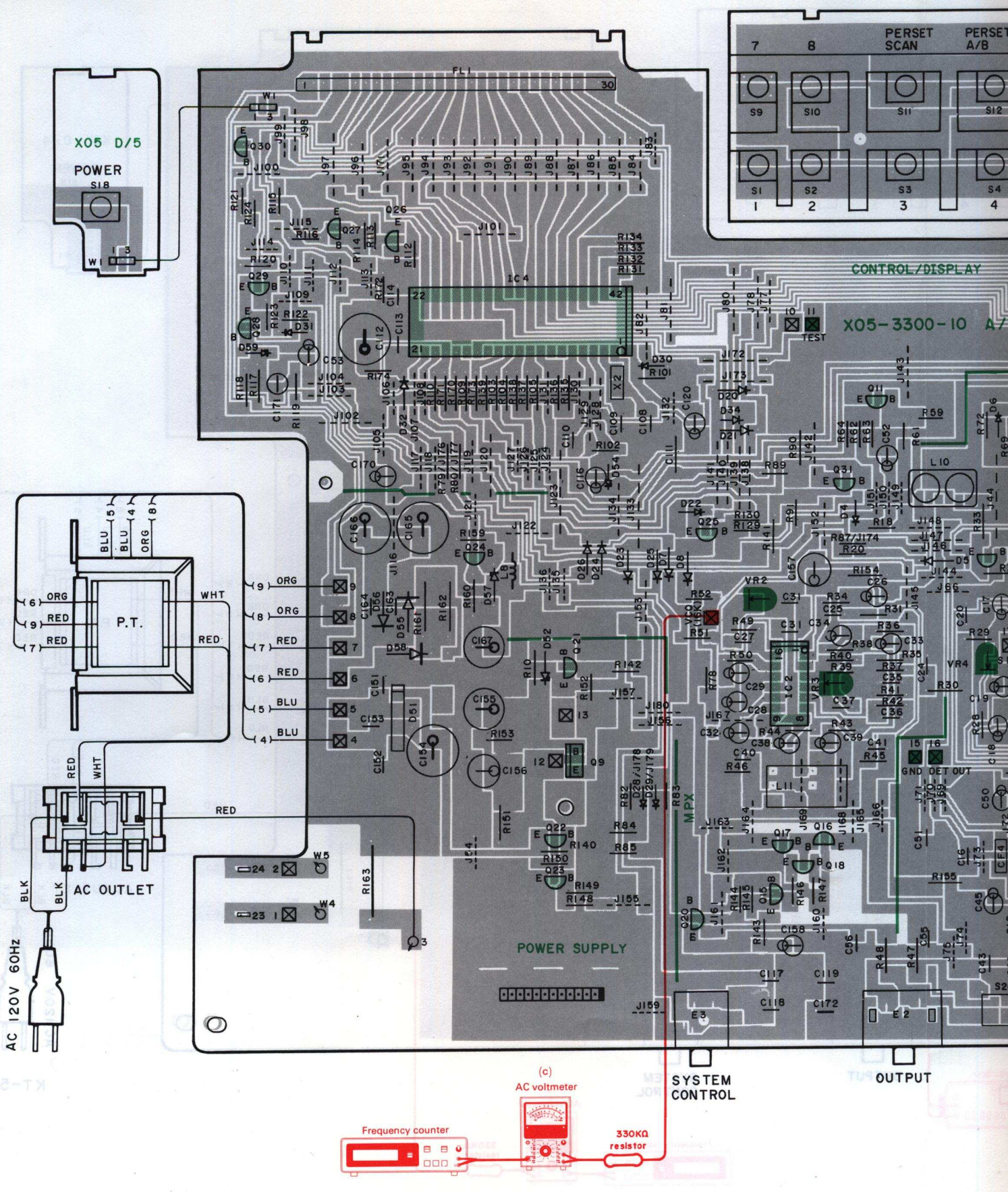

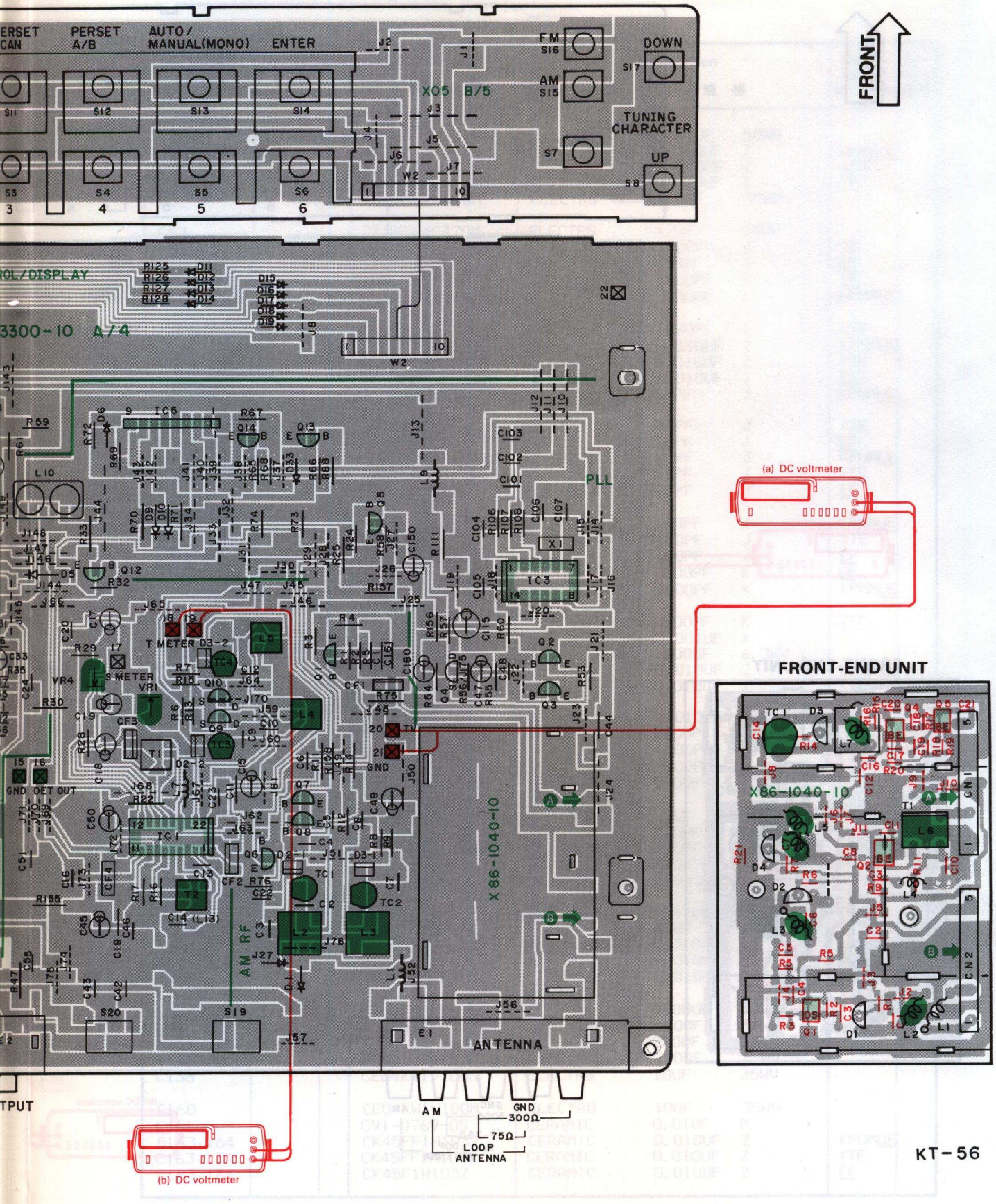

FRONT-END UNIT

KT-56

Refer to the schematic diagram for the values of resistors and capacitors.

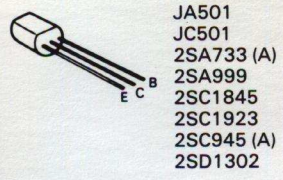

JA501
JC501
2SA733 (A)
2SA999
2SC1845
2SC1923
2SC945 (A)
2SD1302

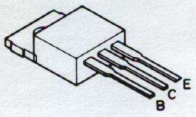

2SD1266

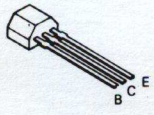

2SA933S
2SC1740S

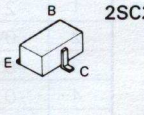

2SC2714

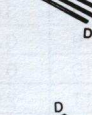

2SK364

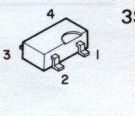

2SK302

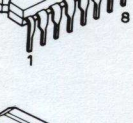

3SK131

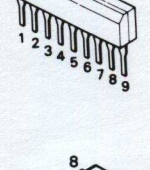

AN7470

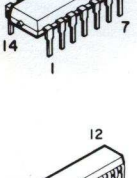

LA7910



CX7925B

LA1265

(X05-3300-10) (A/4)

(X86-1040-10)

Q1 : 2SK302 (Y, GR)
Q2 : 2SC2714 (O)
Q4, 5 : 2SC2714 (R, O)
D1~3 : KV1310A-3

SYSTEM CONTROL

IC 4
MICRO PROCESSOR

FL1

FL1:FIP8BRM7

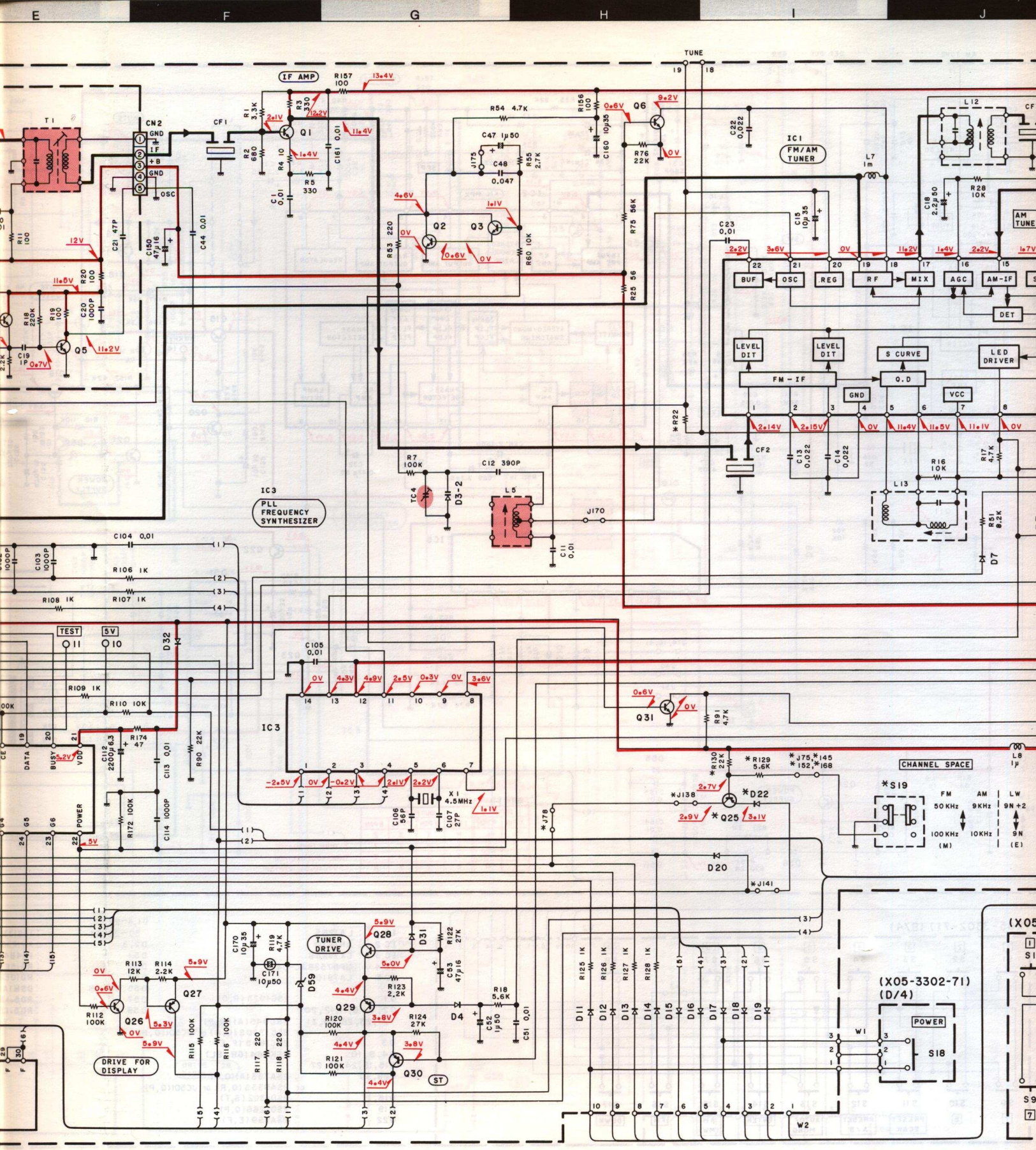

E
F
G
H
I
J
TUNE
IF AMP
R157 100
13.4V
T1
CN2
GND
IF
+B
GND
OSC
CF1
R1 3.3K
R3 330
2.1V
12.2V
Q1
R2 680
R4 10
1.4V
R5 330
C161 0.01
11.4V
C1 0.01
R54 4.7K
C47 1μ50
J175
C48 0.047
R55 2.7K
R156 100
0.6V
Q6
9.2V
C160 10μ35
R76 22K
0V
C22 0.022
IC1
FM/AM TUNER
L7 1m
L12
CF
R28 10K
C18 2.2μ50
AM TUNE
C15 10μ35
C23 0.01
4.6V
Q2
Q3
1.1V
R53 220
0V
0.6V
0V
R60 10K
R75 56K
R25 56
C21 47P
C150 47μ16
C44 0.01
12V
R11 100
R20 100
11.5V
C20 1000P
R18 220K
R19 100
Q5
11.2V
C19 1P
0.7V
2.2K
BUF
OSC
REG
RF
MIX
AGC
AM-IF
DET
LEVEL DIT
LEVEL DIT
S CURVE
LED DRIVER
FM - IF
Q.D
GND
VCC
R22
CF2
C13 0.022
C14 0.022
R16 10K
R17 4.7K
L13
R51 8.2K
D7
R7 100K
C12 390P
TC4
D3-2
L5
J170
C11 0.01
IC3
PLL FREQUENCY SYNTHESIZER
C104 0.01
C103 1000P
R106 1K
R108 1K
R107 1K
TEST
5V
D32
C105 0.01
R109 1K
R110 10K
IC3
Q31
R91 4.7K
R174 47
C112 2200μ6.3
C113 0.01
R90 22K
DATA
BUSY
VDD
POWER
R172 100K
C114 1000P
X1 4.5MHz
C106 56P
C107 27P
R130 22K
R129 5.6K
J75, 145, 152, 168
CHANNEL SPACE
S19
FM 50KHz 100KHz (M)
AM 9KHz 10KHz
LW 9N+2 9N (E)
L8 1μ
J138
D22
Q25
J78
D20
J141
TUNER DRIVE
Q28
D31
R122 27K
C170 10μ35
R119 4.7K
C171 10μ50
D59
C53 47μ16
R123 2.2K
Q29
R18 5.6K
D4
C52 1μ50
C51 0.01
R113 12K
R114 2.2K
Q27
Q26
R112 100K
R115 100K
R116 100K
R117 220
R118 220
R120 100K
R124 27K
R121 100K
Q30
ST
DRIVE FOR DISPLAY
R125 1K
R126 1K
R127 1K
R128 1K
D11
D12
D13
D14
D15
D16
D17
D18
D19
(X05-3302-71)
(D/4)
POWER
S18
W1
W2

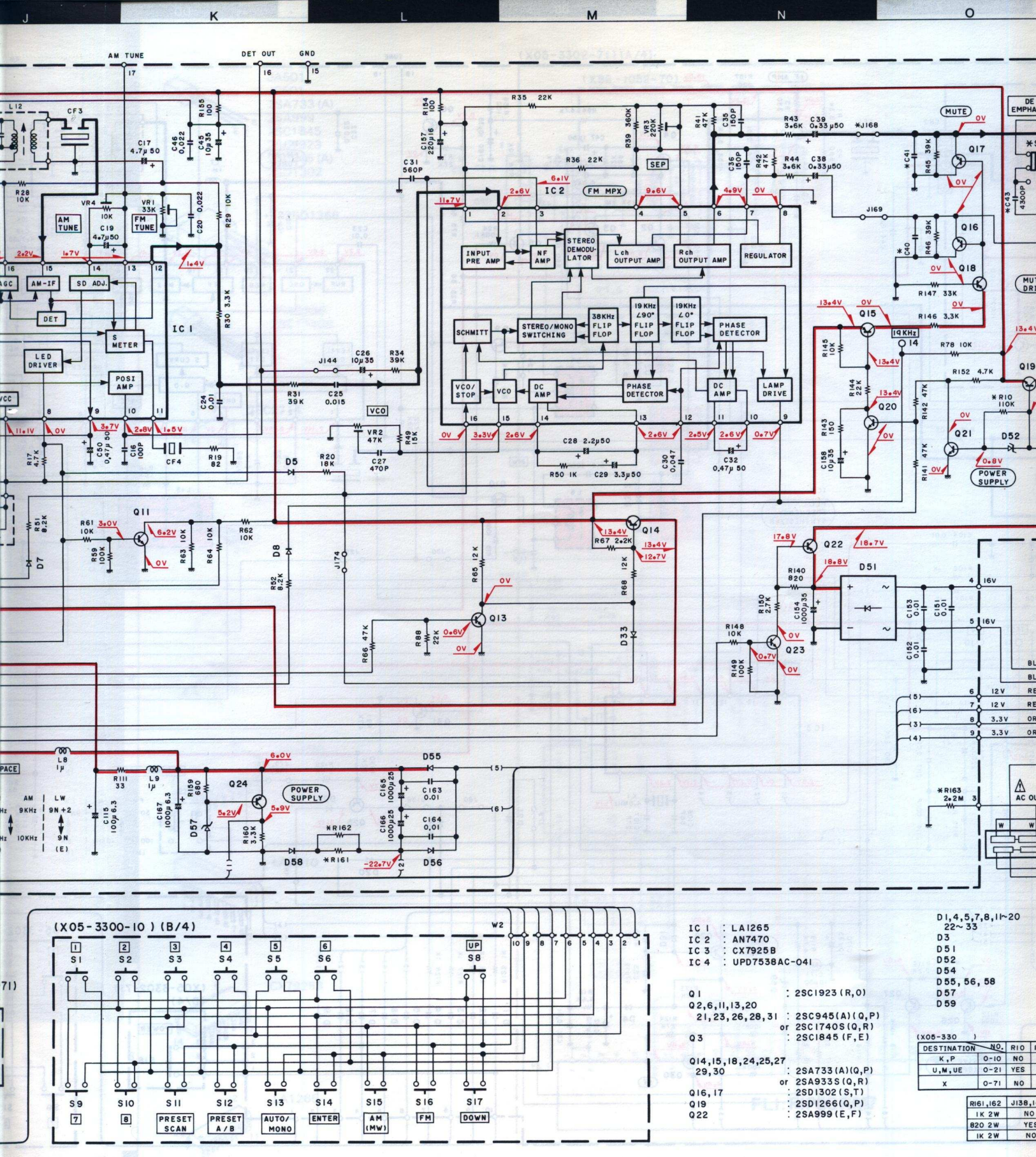

IC 1 : LA1265
IC 2 : AN7470
IC 3 : CX7925B
IC 4 : UPD7538AC-041

Q1 : 2SC1923(R,O)
Q2,6,11,13,20 21,23,26,28,31 : 2SC945(A)(Q,P) or 2SC1740S(Q,R)
Q3 : 2SC1845(F,E)
Q14,15,18,24,25,27 29,30 : 2SA733(A)(Q,P) or 2SA933S(Q,R)
Q16,17 : 2SD1302(S,T)
Q19 : 2SD1266(Q,P)
Q22 : 2SA999(E,F)

D1,4,5,7,8,11~20 22~33
D3
D51
D52
D54
D55, 56, 58
D57
D59

(X05-330) DESTINATION	NO.	R10
K,P	0-10	NO
U,M,UE	0-21	YES
X	0-71	NO

R161,162	J138,1
1K 2W	NO
820 2W	YES
1K 2W	NO

CAUTION: For continued safety, replace safety critical components only with manufacture's recommended parts (refer to parts list). ⚠ Indicates safety critical components. To reduce the risk of electric shock, leakage-current or resistance measurements shall be carried out (exposed parts are acceptably insulated from the supply circuit) before tha appliance is returned to the customer.

DC voltages are as measured with a high impedance voltmeter during reception of the FM broadcast signal (with a signal strength of 60 dB at the ANT terminal). Values may vary slightly due to variations between individual instruments or/and units.

Les tensions c.
impédance per
(avec une force
peuvent différe
appareils et aux

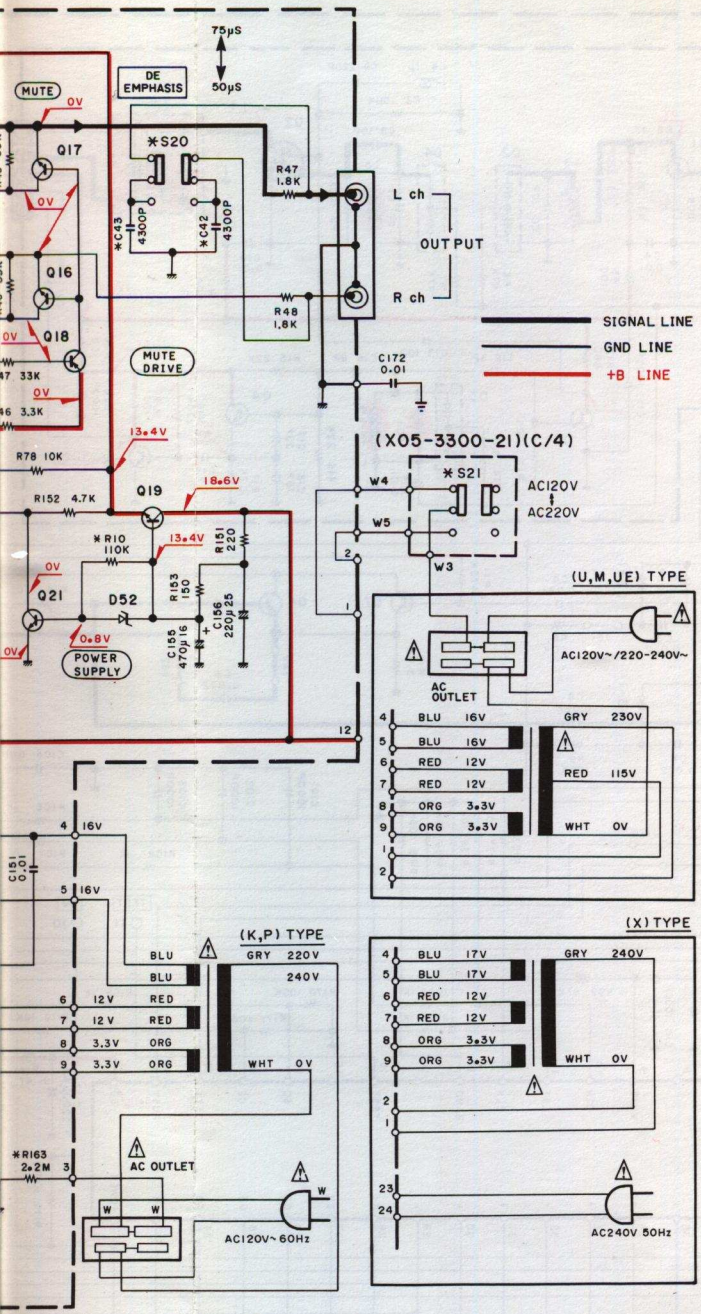

D1,4,5,7,8,11~20
22~33 : ISS133
D3 : KV1236(Z2)
D51 : 1B4B41
D52 : RD13ES(B2)
D54 : RD10ES(B)
D55, 56, 58 : DSM1A1
D57 : RD5.1ES(B2)
D59 : RD5.1E(B)

(X86-1040-10)

	G	D	S
Q1	—	9.0V	—

	B	C	E
Q2	0.7V	11.8V	—
Q4	—	11.5V	5.0V
Q5	0.7V	11.2V	—

(X05-3300-10) (A/4)

	B	C	E
Q1	2.1V	11.4V	1.4V
Q2	0.6V	4.6V	0V
Q3	1.1V	4.6V	0V
Q6	0.6V	9.2V	0V
Q11	3.0V	6.2V	0V
Q13	0.6V	0V	0V
Q14	12.7V	13.4V	13.4V
Q15	13.4V	0V	13.4V
Q16	0V	0V	0V
Q17	0V	0V	0V
Q18	0V	0V	0V
Q19	13.4V	18.6V	13.4V
Q20	0V	13.4V	0V
Q21	0.8V	0V	0V
Q22	17.8V	18.7V	18.8V
Q23	0.7V	0V	0V
Q24	5.2V	5.9V	6.0V
Q25	2.7V	2.9V	3.1V
Q26	0.6V	0V	0V
Q27	5.3V	5.9V	5.9V
Q28	5.0V	5.9V	4.4V
Q29	3.0V	4.4V	4.4V
Q30	3.8V	4.4V	4.4V
Q31	0.6V	0V	0V

IC1

1	2.14V
2	2.15V
3	2.15V
4	0V
5	11.4V
6	11.5V
7	11.1V
8	0V
9	3.7V
10	2.8V
11	1.5V
12	1.4V
13	1.7V
14	1.7V
15	2.2V
16	1.4V
17	11.2V
18	0V
19	0V
20	3.6V
21	3.6V
Q22	2.2V

IC2

1	11.7V
2	2.6V
3	6.1V
4	9.6V
5	9.6V
6	4.9V
7	4.9V
8	0V
9	0.7V
10	2.6V
11	2.5V
12	2.6V
13	2.6V
14	2.6V
15	3.3V
16	0V

IC3

1	−2.5V
2	0V
3	−0.2V
4	−0.2V
5	2.1V
6	2.2V
7	1.1V
8	3.6V
9	0V
10	0.3V
11	2.5V
12	4.9V
13	4.3V
14	0V

(X05-330)

DESTINATION	NO.	R10	R22	R129	R130	R163	C40,41	C42,43	S19	S20,21	Q25	D22
K,P	0-10	NO	12K	NO	NO	YES	0.022	NO	NO	NO	NO	NO
U,M,UE	0-21	YES	39K	YES	YES	NO	0.015	YES	YES	YES	YES	YES
X	0-71	NO	39K	NO	NO	NO	0.015	NO	NO	NO	NO	NO

R161,162	J138,141	J75,78,145,152,168
1K 2W	NO	NO
820 2W	YES	YES
1K 2W	NO	NO

KT-56 (K)
KT-56 (K)

Les tensions c.c. doivent être mesurées avec un voltmètre à haute impédance pendant la réception d'un signal de programme FM (avec une force de signal de 60 dB à la borne ANT). Les valeurs peuvent différer légèrement du fait des variations inhérentes aux appareils et aux instruments de mesure individuels.

Die angegebenen Gleichspannungswerte wurden mit einem hochohmigen Spannungsmesser bei Empfang eines UKW-Signals (mit einer Feldstärke von 60 dB am Antennenanschluß) gemessen. Dabei schwanken die Meßwerte aufgrund von Unterschieden zwischen einzelnen Instrumenten oder Geräten u. U. geringfügig.

KT-56
KENWOOD

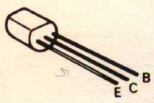

JA501
JC501
2SA733 (A)
2SA999
2SC1845
2SC1923
2SC945 (A)
2SD1302

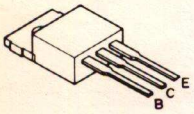

2SD1266

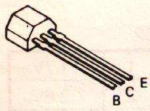

2SA933S
2SC1740S



2SC2714

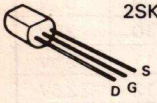

2SK364



2SK302

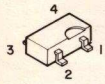

3SK131

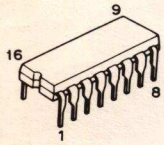

AN7470

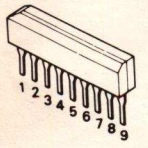

LA7910

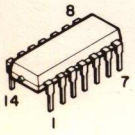

CX7925B

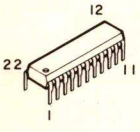

LA1265

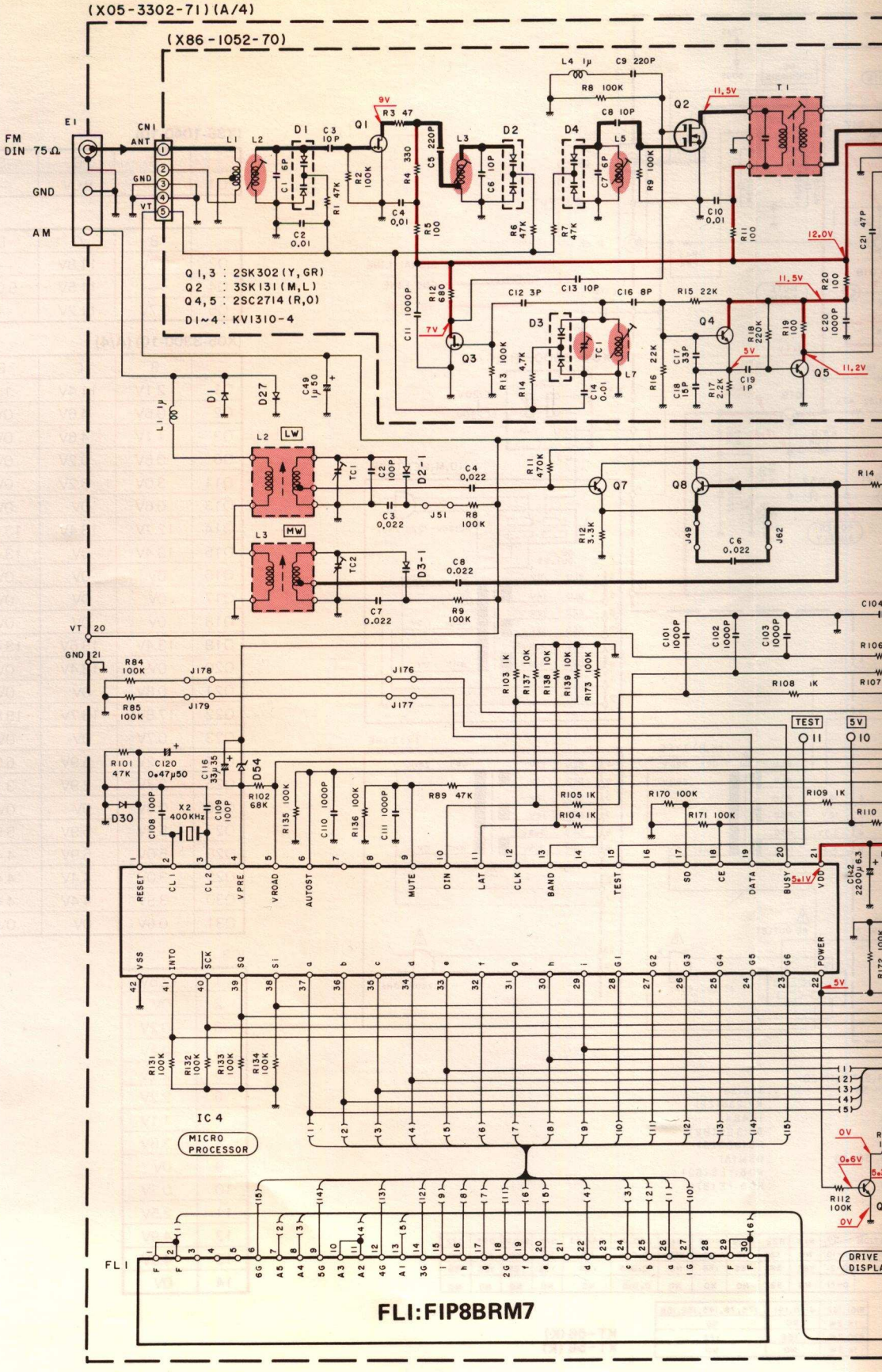

KT-56
KENWOOD

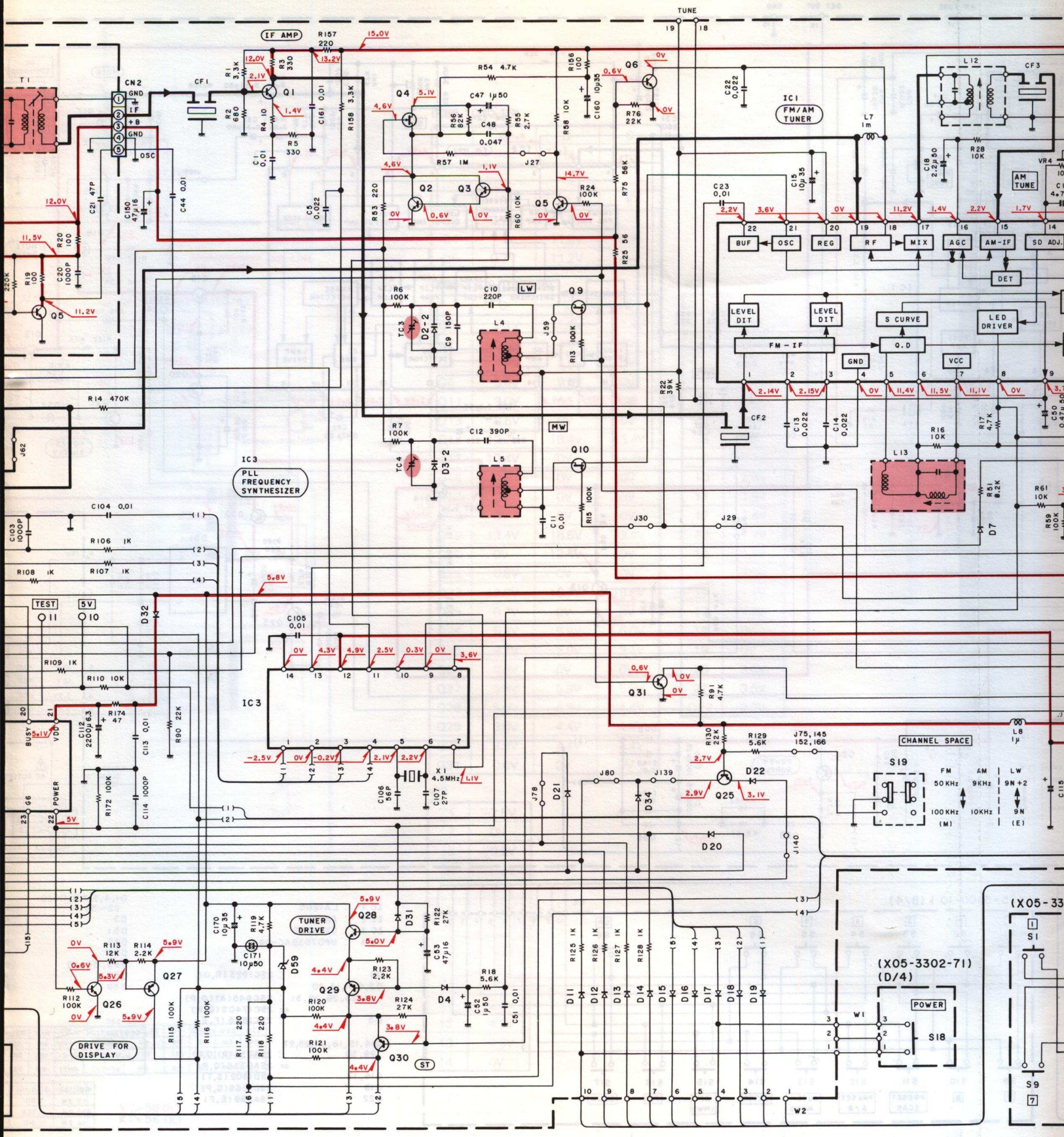

KT-56
KENWOOD

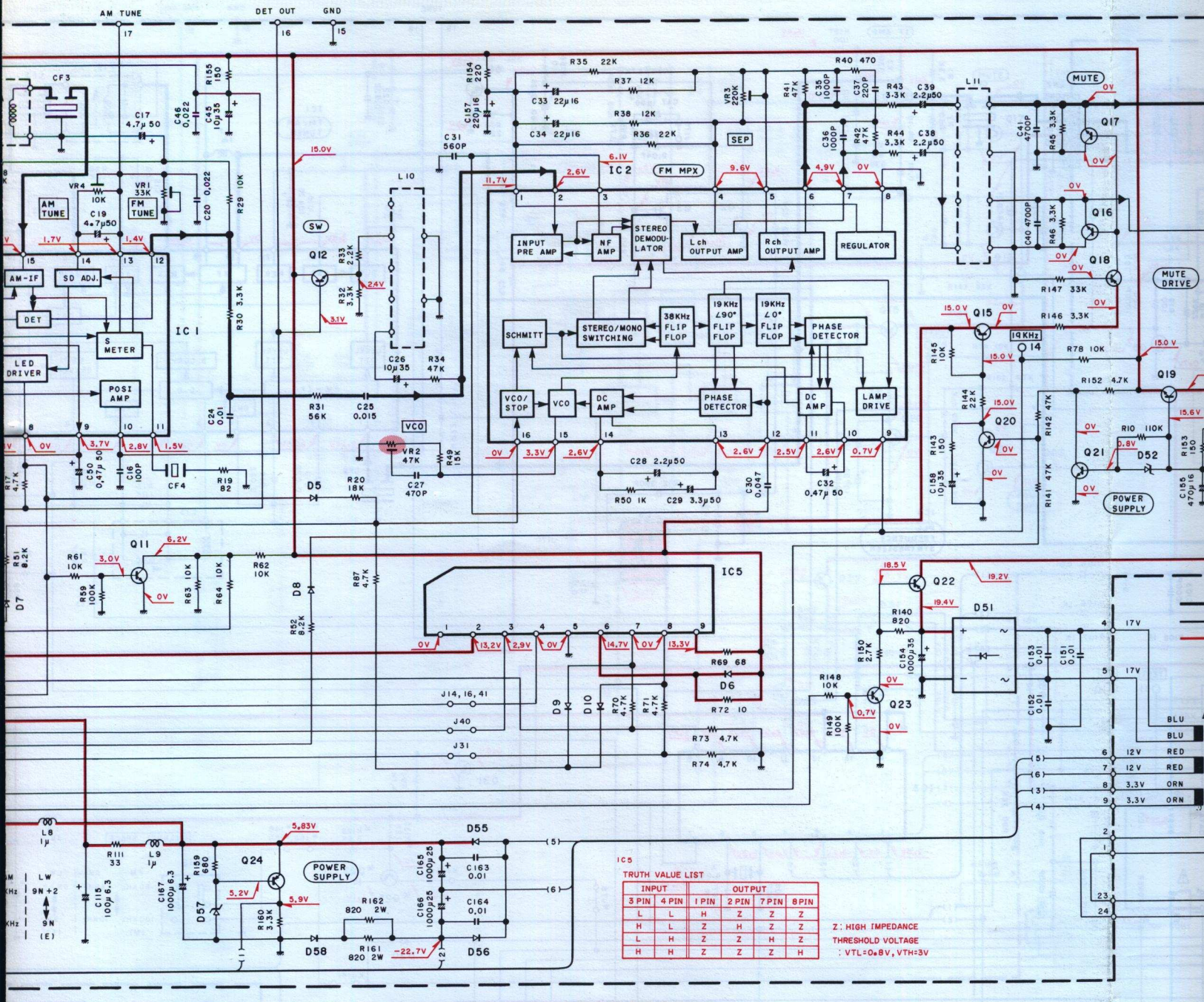

IC5

TRUTH VALUE LIST

INPUT		OUTPUT			
3 PIN	4 PIN	1 PIN	2 PIN	7 PIN	8 PIN
L	L	H	Z	Z	Z
H	L	Z	H	Z	Z
L	H	Z	Z	H	Z
H	H	Z	Z	Z	H

Z : HIGH IMPEDANCE
THRESHOLD VOLTAGE
: VTL=0.8V, VTH=3V

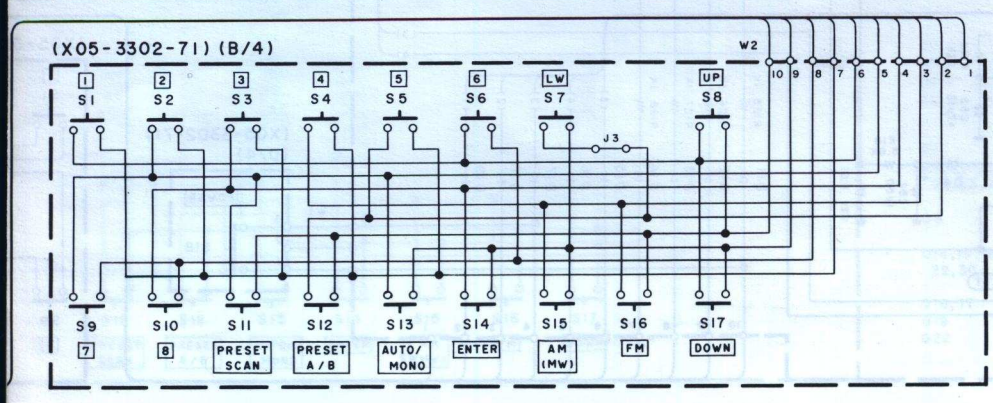

IC 1 : LA1265
IC 2 : AN7470
IC 3 : CX7925B
IC 4 : UPD7538AC-041
IC 5 : LA7910

Q1 : 2SC1923(R,O)
Q2, 5~8, 11, 12, 20, 21, 23, 26, 28, 31 : 2SC945(A)(Q,P) or 2SC1740S(Q,R) or JC501(Q,P)
Q3 : 2SC1845(F,E)
Q4, 9, 10 : 2SK364(GR, BL)
Q15, 18, 24, 25, 27, 29, 30 : 2SA733(A)(Q,P) or 2SA933S(Q,R) or JC501(Q,P)
Q16, 17 : 2SD1302(S,T)
Q19 : 2SD1266(Q,P)
Q22 : 2SA999(E,F)

D1, 4~22, 27, 30~32, 34 :
D2, 3 :
D51 :
D52 :
D54 :
D55, 56, 58 :
D57 :
D59 :

CAUTION: For continued safety, replace safety critical components only with manufacture's recommended parts (refer to parts list). ⚠ Indicates safety critical components. To reduce the risk of electric shock, leakage-current or resistance measurements shall be carried out (exposed parts are acceptably insulated from the supply circuit) before tha appliance is returned to the customer.

DC voltages are as measured with a high impedance voltmeter during reception of the FM broadcast signal (with a signal strength of 60 dB at the ANT terminal). Values may vary slightly due to variations between individual instruments or/and units.

Les tensions c.c. doivent être mesu
impédance pendant la réception d
(avec une force de signal de 60 dB
peuvent différer légèrement du fait
appareils et aux instruments de mes

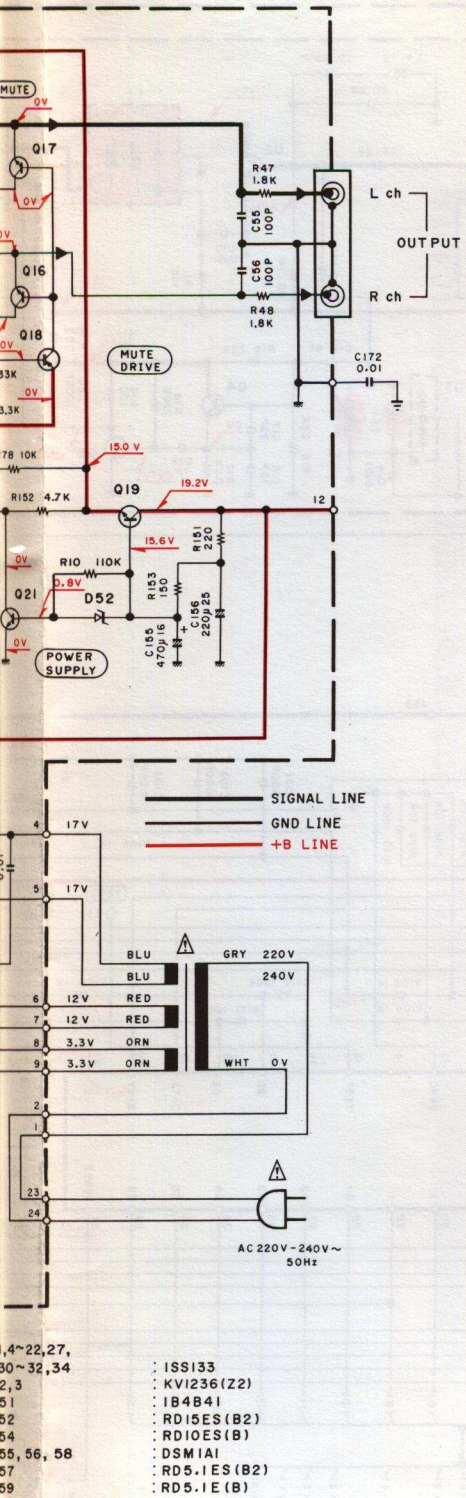

,4~22,27, : ISS133
30~32,34 : KV1236(Z2)
2,3 : IB4B41
51 : RD15ES(B2)
52 : RD10ES(B)
54 : DSM1A1
55, 56, 58 : RD5.1ES(B2)
57 : RD5.1E(B)
59

(X86-1052-70)

	G	D	S
Q1	—	9.0V	—
Q3	—	7.0V	—

	G1	D2	D	S
Q2	—	—	11.5V	—

	B	C	E
Q4	—	—	5.0V
Q5	—	11.2V	—

(X05-3302-71) (A/4)

	B	C	E
Q1	2.1V	—	1.4V
Q2	0.6V	4.6V	0V
Q3	1.1V	4.6V	0V
Q5	0V	14.7V	0V
Q6	0.6V	9.2V	0V
Q11	3.0V	0.2V	0V
Q12	3.1V	15.0V	2.4V
Q15	15.0V	0V	15.0V
Q16	0V	0V	0V
Q17	0V	0V	0V
Q18	0V	0V	0V
Q19	15.6V	19.2V	15.0V
Q20	0V	15.0V	0V
Q21	0.8V	0V	0V
Q22	18.5V	19.2V	19.4V
Q23	0.7V	0V	0V
Q24	5.2V	5.9V	6.0V
Q25	2.7V	2.9V	3.1V
Q26	0.6V	0V	0V
Q27	5.3V	5.9V	5.9V
Q28	5.0V	5.9V	4.4V
Q29	3.8V	4.4V	4.4V
Q30	3.8V	4.4V	4.4V
Q31	0.6V	0V	0V

IC1

1	2.14V
2	2.15V
3	2.15V
4	0V
5	11.4V
6	11.5V
7	11.1V
8	0V
9	3.7V
10	2.8V
11	1.5V
12	1.4V
13	1.7V
14	1.7V
15	2.2V
16	1.4V
17	11.2V
18	0V
19	0V
20	3.6V
21	3.6V
Q22	2.2V

IC2

1	11.7V
2	2.6V
3	6.1V
4	9.6V
5	9.6V
6	4.9V
7	4.9V
8	0V
9	0.7V
10	2.6V
11	2.5V
12	2.6V
13	2.6V
14	2.6V
15	3.3V
16	0V

IC3

1	−2.5V
2	0V
3	−0.2V
4	−0.2V
5	2.1V
6	2.2V
7	1.1V
8	3.6V
9	0V
10	0.3V
11	2.5V
12	4.9V
13	4.3V
14	0V

IC5

1	0V
2	13.2V
3	2.9V
4	0V
5	0V
6	14.7V
7	0V
8	0V
9	13.3V

	G	D	S
Q4	4.6	5.1	4.6

KT-56L (E)

c. doivent être mesurées avec un voltmètre à haute
ndant la réception d'un signal de programme FM
e de signal de 60 dB à la borne ANT). Les valeurs
r légèrement du fait des variations inhérentes aux
instruments de mesure individuels.

Die angegebenen Gleichspannungswerte wurden mit einem hochohmigen Spannungsmesser bei Empfang eines UKW-Signals (mit einer Feldstärke von 60 dB am Antennenanschluß) gemessen. Dabei schwanken die Meßwerte aufgrund von Unterschieden zwischen einzelnen Instrumenten oder Geräten u. U. geringfügig.

KT-56L
KENWOOD

EXPLODED VIEW

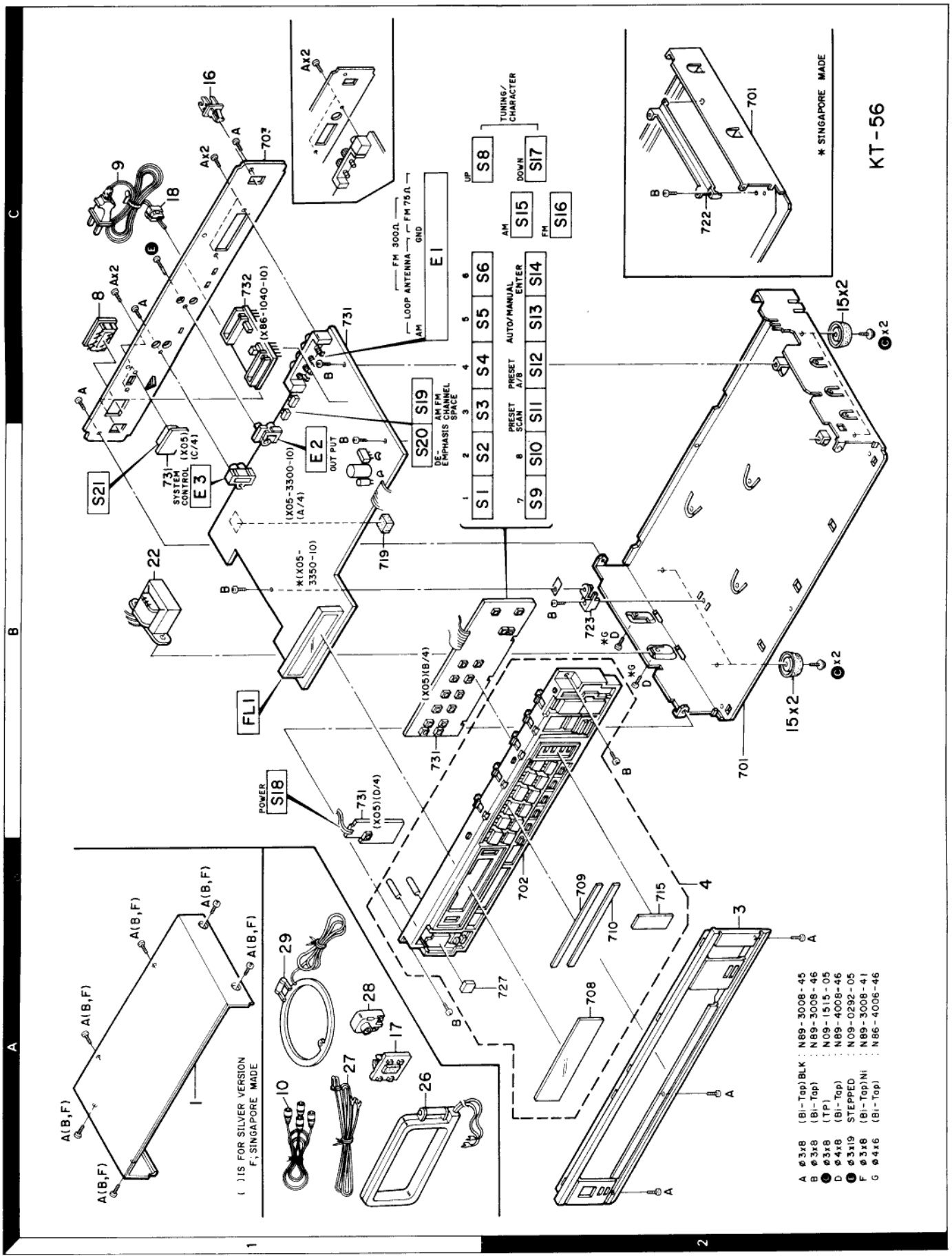

Parts with the exploded numbers larger than 700 are not supplied.

PARTS LIST

* New Parts
Parts without **Parts No.** are not supplied.
Les articles non mentionnes dans le **Parts No.** ne sont pas fournis.
Teile ohne **Parts No.** werden nicht geliefert.

	Ref. No. 参照番号	Address 位置	New Parts 新	Parts No. 部品番号	Description 部品名／規格	Destination 仕向	Remarks 備考
				KT-56/56L			
	1	1A		A01-1389-01	METALLIC CABINET	E	S
	1	1A		A01-1469-01	METALLIC CABINET	KPUMUE	B
	1	1A		A01-1469-01	METALLIC CABINET	XTE	B
	3	2A	*	A20-5153-02	PANEL	KPUMUE	B
	3	2A	*	A20-5153-02	PANEL	X	B
	3	2A	*	A20-5155-02	PANEL	TE	B
	3	2A	*	A20-5156-02	PANEL	E	S
	4	2A	*	A22-0666-03	SUB PANEL ASSY	KPUMUE	B
	4	2A	*	A22-0666-03	SUB PANEL ASSY	X	B
	4	2A	*	A22-0667-03	SUB PANEL ASSY	TE	B
	4	2A	*	A22-0679-03	SUB PANEL ASSY	E	S
	-			B46-0092-03	WARRANTY CARD	K	
	-			B46-0094-03	WARRANTY CARD	UUE	
	-			B46-0095-03	WARRANTY CARD	UUE	
	-			B46-0096-13	WARRANTY CARD	X	
	-			B46-0121-03	WARRANTY CARD	P	
	-			B46-0122-13	WARRANTY CARD	E	
	-			B46-0143-03	WARRANTY CARD	T	
	-		*	B50-6612-00	INSTRUCTION MANUAL(ENGLISH)	KPUMUE	
	-		*	B50-6612-00	INSTRUCTION MANUAL(ENGLISH)	XTE	
	-		*	B50-6613-00	INSTRUCTION MANUAL(FRENCH)	PMXE	
	-		*	B50-6614-00	INSTRUCTION MANUAL(SPANISH)	M	
	-		*	B50-6615-00	INSTRUCTION MANUAL(ARABIC)	M	
	-		*	B50-6617-00	INSTRUCTION MANUAL(G,D,I)	E	
	-			B58-0223-04	CAUTION CARD (PRE-SET 120V)	U	
	-			B58-0269-04	CAUTION CARD	K	
	-			B58-0513-04	CAUTION CARD (PRESET220-240)	UE	
	-			B59-0092-00	SERVICE DIRECTORY	UUE	
⚠	8	1C		E03-0072-05	AC OUTLET	KPUMUE	
⚠	9	1C		E30-0812-05	AC POWER CORD	UMUE	
⚠	9	1C		E30-0996-05	AC POWER CORD	KP	
⚠	9	1C		E30-1341-05	AC POWER CORD	X	
⚠	9	1C		E30-1416-05	AC POWER CORD	T	
	10	1A		E30-0505-05	AUDIO CORD		
	-		*	H01-7439-04	ITEM CARTON CASE	KPUMUE	
	-		*	H01-7439-04	ITEM CARTON CASE	X	
	-		*	H01-7441-04	ITEM CARTON CASE	TE	
	-		*	H01-7442-04	ITEM CARTON CASE	E	
	-			H10-3446-02	POLYSTYRENE FOAMED FIXTURE		
	-			H25-0223-04	PROTECTION BAG (750X350X0.03)		
	-			H25-0232-04	PROTECTION BAG (235X350X0.03)		
	15	2B,2C		J02-0170-04	FOOT		
	16	1C		J19-0626-12	ANTENNA HOLDER		
	17	1A		J19-0875-03	ANTENNA HOLDER		
⚠	18	1C		J42-0083-05	POWER CORD BUSHING		
	-			J61-0307-05	WIRE BAND	TE	
⚠	22	1B	*	L01-7611-05	POWER TRANSFORMER	KP	
⚠	22	1B	*	L01-7612-05	POWER TRANSFORMER	XTE	
⚠	22	1B	*	L01-7614-05	POWER TRANSFORMER	UMUE	
	C	2B,2C		N09-1515-05	TAPPING SCREW (Ø3X8)		

E: Scandinavia & Europe H:Audio Club K: USA P: Canada W:Europe
S: South Africa T: England U: PX(Far East, Hawaii)
UE : AAFES(Europe) X: Australia M: Other Areas

⚠ indicates safety critical components.

* New Parts
Parts without **Parts No.** are not supplied.
Les articles non mentionnes dans le **Parts No.** ne sont pas fournis.
Teile ohne **Parts No.** werden nicht geliefert.

	Ref. No. 参照番号	Address 位置	New Parts 新	Parts No. 部品番号	Description 部品名／規格	Destination 仕向	Remarks 備考
	E	1C		N09-0292-05	STEPPED SCREW (Ø3X19)		
	26	1A		T90-0104-25	LOOP ANTENNA	KPUMUE	
	26	1A		T90-0104-25	LOOP ANTENNA	X	
	27	1A		T90-0132-05	T TYPE ANTENNA		
	28	1A		T90-0136-05	ANTENNA ADAPTOR	TE	
	29	1A		T90-0138-15	LOOP ANTENNA	TE	
				France made			
	1	1A		A01-1484-02	METALLIC CABINET		B
	1	1A		A01-1501-02	METALLIC CABINET		S
	3	2A	*	A20-5155-02	PANEL		B
	3	2A	*	A20-5156-02	PANEL		S
	4	2A	*	A22-0667-03	SUB PANEL ASSY		B
	4	2A	*	A22-0679-03	SUB PANEL ASSY		S
	-			B46-0139-03	WARRANTY CARD		
	-		*	B50-6618-00	INSTRUCTION MANUAL(ENGLISH)		
	-		*	B50-6619-00	INSTRUCTION MANUAL(FRENCH)		
	-		*	B50-6620-00	INSTRUCTION MANUAL(G,D,I)		
	-			B58-0803-03	CAUTION CARD		
⚠	9	1C		E30-0459-05	AC POWER CORD		
	10	1A		E30-0505-05	AUDIO CORD		
	-		*	H01-7443-04	ITEM CARTON CASE		
	-		*	H01-7444-04	ITEM CARTON CASE		
	-			H10-3446-02	POLYSTYRENE FOAMED FIXTURE		
	-			H25-0223-04	PROTECTION BAG (750X350X0.03)		
	-			H25-0232-04	PROTECTION BAG (235X350X0.03)		
	15	2B,2C		J02-0170-04	FOOT		
	16	1C		J19-0626-12	ANTENNA HOLDER		
	17	1A		J19-0875-03	ANTENNA HOLDER		
⚠	18	1C		J42-0083-05	POWER CORD BUSHING		
⚠	22	1B	*	L01-7612-05	POWER TRANSFORMER		
	C	2B,2C		N09-1515-05	TAPPING SCREW (Ø3X8)		
	E	1C		N09-0292-05	STEPPED SCREW (Ø3X19)		
	27	1A		T90-0132-05	T TYPE ANTENNA		
	28	1A		T90-0136-05	ANTENNA ADAPTOR		
	29	1A		T90-0138-15	LOOP ANTENNA		
				Singapore made			
	1	1A		A01-1484-02	METALLIC CABINET	KPUMUE	B
	1	1A		A01-1484-02	METALLIC CABINET	XTE	B
	1	1A	*	A01-1501-02	METALLIC CABINET	E	S
	3	2A		A20-5153-02	PANEL	KPUMUE	B
	3	2A		A20-5153-02	PANEL	X	B
	3	2A		A20-5155-02	PANEL	TE	B
	3	2A		A20-5156-02	PANEL	E	S
	4	2A		A22-0666-03	SUB PANEL ASSY	KPUMUE	B
	4	2A		A22-0666-03	SUB PANEL ASSY	X	B
	4	2A		A22-0667-03	SUB PANEL ASSY	TE	B
	4	2A		A22-0679-03	SUB PANEL ASSY	E	S
	-			B46-0092-03	WARRANTY CARD	K	
	-			B46-0094-03	WARRANTY CARD	UUE	
	-			B46-0095-03	WARRANTY CARD	UUE	
	-			B46-0096-13	WARRANTY CARD	X	

E: Scandinavia & Europe H:Audio Club K: USA P: Canada W:Europe
S: South Africa T: England U: PX(Far East, Hawaii)
UE : AAFES(Europe) X: Australia M: Other Areas

⚠ indicates safety critical components.

* New Parts
Parts without **Parts No.** are not supplied.
Les articles non mentionnes dans le **Parts No.** ne sont pas fournis.
Teile ohne **Parts No.** werden nicht geliefert.

	Ref. No. 参照番号	Address 位置	New Parts 新	Parts No. 部品番号	Description 部品名／規格			Destination 仕向	Remarks 備考
	-			B46-0121-03	WARRANTY CARD			P	
	-			B46-0122-13	WARRANTY CARD			E	
	-			B46-0143-03	WARRANTY CARD			T	
	-		*	B50-6752-00	INSTRUCTION MANUAL(ENGLISH)				
	-		*	B50-6753-00	INSTRUCTION MANUAL(FRENCH)			PMXE	
	-		*	B50-6754-00	INSTRUCTION MANUAL(SPANISH)			M	
	-		*	B50-6755-00	INSTRUCTION MANUAL(ARABIC)			M	
	-		*	B50-6756-00	INSTRUCTION MANUAL(G,D,I)			E	
	-			B58-0223-04	CAUTION CARD (PRE-SET 120V)			U	
	-			B58-0269-04	CAUTION CARD			K	
	-			B58-0513-04	CAUTION CARD (PRESET220-240)			UE	
	-			B58-0803-03	CAUTION CARD			E	
	-			B59-0092-00	SERVICE DIRECTORY			UUE	
⚠	8	1C		E03-0072-05	AC OUTLET			KPUMUE	
⚠	9	1C		E30-0459-05	AC POWER CORD			E	
⚠	9	1C		E30-0812-05	AC POWER CORD			UMUE	
⚠	9	1C		E30-0996-05	AC POWER CORD			KP	
⚠	9	1C		E30-1341-05	AC POWER CORD			X	
	9	1C		E30-1416-05	AC POWER CORD			T	
	10	1A		E30-0505-05	AUDIO CORD				
	-		*	H01-7534-04	ITEM CARTON CASE			KPUMUE	
	-		*	H01-7534-04	ITEM CARTON CASE			X	
	-		*	H01-7535-04	ITEM CARTON CASE			TE	
	-		*	H01-7536-04	ITEM CARTON CASE			E	
	-			H10-3302-12	POLYSTYRENE FOAMED FIXTURE				
	-			H25-0223-04	PROTECTION BAG (750X350X0.03)				
	-			H25-0232-04	PROTECTION BAG (235X350X0.03)				
	15	2B,2C		J02-0161-04	FOOT				
	16	1C		J19-0564-05	ANTENNA HOLDER				
	17	1A		J19-0875-03	ANTENNA HOLDER				
⚠	18	1C		J42-0083-05	POWER CORD BUSHING				
	-			J61-0307-05	WIRE BAND			TE	
⚠	22	1B	*	L01-7831-05	POWER TRANSFORMER			KP	
⚠	22	1B	*	L01-7832-05	POWER TRANSFORMER			XTE	
⚠	22	1B	*	L01-7834-05	POWER TRANSFORMER			UMUE	
	C	2B,2C		N09-1515-05	TAPPING SCREW (Ø3X8)				
	E	1C		N09-0292-05	STEPPED SCREW (Ø3X19)				
	26	1A		T90-0104-25	LOOP ANTENNA			KPUMUE	
	26	1A		T90-0104-25	LOOP ANTENNA			X	
	27	1A		T90-0121-05	T TYPE ANTENNA				
	28	1A		T90-0136-05	ANTENNA ADAPTOR			TE	
	29	1A		T90-0138-15	LOOP ANTENNA			TE	
	TUNER UNIT (X05-3300-10)								
	C1			C91-0769-05	CERAMIC	0.01UF	M		
	C2			CC45FTH1H101J	CERAMIC	100PF	J	TE	
	C2			CC45TH1H101J	CERAMIC	100PF	J	EF	
	C3 -8			CK45FF1H223Z	CERAMIC	0.022UF	Z	TE	
	C3 -8			CK45F1H223Z	CERAMIC	0.022UF	Z	EF	
	C7 ,8			CK45FF1H223Z	CERAMIC	0.022UF	Z	KPUMUE	
	C7 ,8			CK45FF1H223Z	CERAMIC	0.022UF	Z	X	
	C9			CC45CH1H151J	CERAMIC	150PF	J	EF	
	C9			CC45FCH1H151J	CERAMIC	150PF	J	TE	
	C10			CQ09FS1H221JY0	POLYSTY	220PF	J	TEEF	

E: Scandinavia & Europe H:Audio Club K: USA P: Canada W:Europe
S: South Africa T: England U: PX(Far East, Hawaii)
UE : AAFES(Europe) X: Australia M: Other Areas

⚠ indicates safety critical components.

* New Parts
Parts without **Parts No.** are not supplied.
Les articles non mentionnes dans le **Parts No.** ne sont pas fournis.
Teile ohne **Parts No.** werden nicht geliefert.

Ref. No. 参照番号	Address 位置	New Parts 新	Parts No. 部品番号	Description 部品名／規格			Destination 仕向	Remarks 備考
C11			C91-0769-05	CERAMIC	0.01UF	M		
C12			CQ09FS1H391JY0	POLYSTY	390PF	J		
C13 ,14			CK45FF1H223Z	CERAMIC	0.022UF	Z	KPUMUE	
C13 ,14			CK45FF1H223Z	CERAMIC	0.022UF	Z	XTE	
C13 ,14			CK45F1H223Z	CERAMIC	0.022UF	Z	EF	
C15			CE04KW1V100M	ELECTRO	10UF	35WV		
C16			CC45FSL1H101J	CERAMIC	100PF	J	KPUMUE	
C16			CC45FSL1H101J	CERAMIC	100PF	J	XTE	
C16			CC45SL1H101J	CERAMIC	100PF	J	EF	
C17			CE04KW1H4R7M	ELECTRO	4.7UF	50WV		
C18			CE04KW1H2R2M	ELECTRO	2.2UF	50WV		
C19			CE04KW1H4R7M	ELECTRO	4.7UF	50WV		
C20			CK45FF1H223Z	CERAMIC	0.022UF	Z	KPUMUE	
C20			CK45FF1H223Z	CERAMIC	0.022UF	Z	XTE	
C20			CK45F1H223Z	CERAMIC	0.022UF	Z	EF	
C22			CK45FF1H223Z	CERAMIC	0.022UF	Z	KPUMUE	
C22			CK45FF1H223Z	CERAMIC	0.022UF	Z	XTE	
C22			CK45F1H223Z	CERAMIC	0.022UF	Z	EF	
C23 ,24			CK45FF1H103Z	CERAMIC	0.010UF	Z	KPUMUE	
C23 ,24			CK45FF1H103Z	CERAMIC	0.010UF	Z	XTE	
C23 ,24			CK45F1H103Z	CERAMIC	0.010UF	Z	EF	
C25			CF92FV1H153J	MF	0.015UF	J		
C26			CE04KW1V100M	ELECTRO	10UF	35WV		
C27			CQ09FS1H471J	POLYSTY	470PF	J		
C28			CE04KW1H2R2M	ELECTRO	2.2UF	50WV		
C29			CE04KW1H3R3M	ELECTRO	3.3UF	50WV		
C30			CF92FV1H473J	MF	0.047UF	J		
C31			CK45B1H561K	CERAMIC	560PF	K	EF	
C31			CK45FB1H561K	CERAMIC	560PF	K	KPUMUE	
C31			CK45FB1H561K	CERAMIC	560PF	K	XTE	
C32			CE04KW1HR47M	ELECTRO	0.47UF	50WV		
C33 ,34			CE04KW1C220M	ELECTRO	22UF	16WV	TEEF	
C35 ,36			CC45FSL1H151J	CERAMIC	150PF	J	KPUMUE	
C35 ,36			CC45FSL1H151J	CERAMIC	150PF	J	X	
C35 ,36			CK45B1H102K	CERAMIC	1000PF	K	EF	
C35 ,36			CK45FB1H102K	CERAMIC	1000PF	K	TE	
C37			CC45FSL1H221J	CERAMIC	220PF	J	TE	
C37			CC45SL1H221J	CERAMIC	220PF	J	EF	
C38 ,39			CE04KW1HR33M	ELECTRO	0.33UF	50WV	KPUMUE	
C38 ,39			CE04KW1HR33M	ELECTRO	0.33UF	50WV	X	
C38 ,39			CE04KW1H2R2M	ELECTRO	2.2UF	50WV	TEEF	
C40 ,41			CF92FV1H153J	MF	0.015UF	J	UMUEX	
C40 ,41			CF92FV1H223J	MF	0.022UF	J	KP	
C40 ,41			CF92FV1H472J	MF	4700PF	J	TEEF	
C42 ,43			CF92FV1H432J	MF	4300PF	J	UMUE	
C44			C91-0769-05	CERAMIC	0.01UF	M		
C45			CE04KW1V100M	ELECTRO	10UF	35WV		
C46			CK45FF1H223Z	CERAMIC	0.022UF	Z	KPUMUE	
C46			CK45FF1H223Z	CERAMIC	0.022UF	Z	XTE	
C46			CK45F1H223Z	CERAMIC	0.022UF	Z	EF	
C47			CE04KW1H010M	ELECTRO	1.0UF	50WV		
C48			CK45FF1H473Z	CERAMIC	0.047UF	Z	KPUMUE	
C48			CK45FF1H473Z	CERAMIC	0.047UF	Z	XTE	
C48			CK45F1H473Z	CERAMIC	0.047UF	Z	EF	
C49			CE04KW1H010M	ELECTRO	1.0UF	50WV		

E: Scandinavia & Europe H:Audio Club K: USA P: Canada W:Europe
S: South Africa T: England U: PX(Far East, Hawaii)
UE : AAFES(Europe) X: Australia M: Other Areas

⚠ indicates safety critical components.

* New Parts
Parts without **Parts No.** are not supplied.
Les articles non mentionnes dans le **Parts No.** ne sont pas fournis.
Teile ohne **Parts No.** werden nicht geliefert.

Ref. No. 参照番号	Address 位置	New Parts 新	Parts No. 部品番号	Description 部品名／規格			Destination 仕向	Remarks 備考
C50			CE04KW1HR47M	ELECTRO	0.47UF	50WV		
C51			CK45FF1H103Z	CERAMIC	0.010UF	Z	KPUMUE	
C51			CK45FF1H103Z	CERAMIC	0.010UF	Z	XTE	
C51			CK45F1H103Z	CERAMIC	0.010UF	Z	EF	
C52			CE04KW1H010M	ELECTRO	1.0UF	50WV		
C53			CE04KW1C470M	ELECTRO	47UF	16WV		
C55 ,56			CC45FSL1H101J	CERAMIC	100PF	J	TE	
C55 ,56			CC45SL1H101J	CERAMIC	100PF	J	EF	
C101-103			CK45B1H102K	CERAMIC	1000PF	K	EF	
C101-103			CK45FB1H102K	CERAMIC	1000PF	K	KPUMUE	
C101-103			CK45FB1H102K	CERAMIC	1000PF	K	XTE	
C104,105			CK45FF1H103Z	CERAMIC	0.010UF	Z	KPUMUE	
C104,105			CK45FF1H103Z	CERAMIC	0.010UF	Z	XTE	
C104,105			CK45F1H103Z	CERAMIC	0.010UF	Z	EF	
C106			CC45FSL1H560J	CERAMIC	56PF	J	KPUMUE	
C106			CC45FSL1H560J	CERAMIC	56PF	J	XTE	
C106			CC45SL1H560J	CERAMIC	56PF	J	EF	
C107			CC45FSL1H270J	CERAMIC	27PF	J	KPUMUE	
C107			CC45FSL1H270J	CERAMIC	27PF	J	XTE	
C107			CC45SL1H270J	CERAMIC	27PF	J	EF	
C108,109			CC45FSL1H101J	CERAMIC	100PF	J	KPUMUE	
C108,109			CC45FSL1H101J	CERAMIC	100PF	J	XTE	
C108,109			CC45SL1H101J	CERAMIC	100PF	J	EF	
C110			CK45B1H102K	CERAMIC	1000PF	K	EF	
C110			CK45FB1H102K	CERAMIC	1000PF	K	KPUMUE	
C110			CK45FB1H102K	CERAMIC	1000PF	K	XTE	
C111			C91-0757-05	CERAMIC	0.001UF	K		
C112			CE04KW0J222M	ELECTRO	2200UF	6.3WV		
C113			CK45FF1H103Z	CERAMIC	0.010UF	Z	KPUMUE	
C113			CK45FF1H103Z	CERAMIC	0.010UF	Z	XTE	
C113			CK45F1H103Z	CERAMIC	0.010UF	Z	EF	
C114			CK45B1H102K	CERAMIC	1000PF	K	EF	
C114			CK45FB1H102K	CERAMIC	1000PF	K	KPUMUE	
C114			CK45FB1H102K	CERAMIC	1000PF	K	XTE	
C115			CE04KW0J101M	ELECTRO	100UF	6.3WV		
C116			CE04KW1V330M	ELECTRO	33UF	35WV		
C117,118			CC45FSL1H221J	CERAMIC	220PF	J	KPUMUE	
C117,118			CC45FSL1H221J	CERAMIC	220PF	J	X	
C119			CK45FF1H473Z	CERAMIC	0.047UF	Z	KPUMUE	
C119			CK45FF1H473Z	CERAMIC	0.047UF	Z	X	
C120			CE04KW1HR47M	ELECTRO	0.47UF	50WV		
C150			CE04KW1C470M	ELECTRO	47UF	16WV		
C151-153			CK45FF1H103Z	CERAMIC	0.010UF	Z	KPUMUE	
C151-153			CK45FF1H103Z	CERAMIC	0.010UF	Z	XTE	
C151-153			CK45F1H103Z	CERAMIC	0.010UF	Z	EF	
C154			CE04KW1V102M	ELECTRO	1000UF	35WV		
C155			CE04KW1C471M	ELECTRO	470UF	16WV		
C156			CE04KW1E221M	ELECTRO	220UF	25WV		
C157			CE04KW1C221M	ELECTRO	220UF	16WV		
C158			CE04KW1V100M	ELECTRO	10UF	35WV		
C160			CE04KW1V100M	ELECTRO	10UF	35WV		
C161			C91-0769-05	CERAMIC	0.01UF	M		
C163,164			CK45FF1H103Z	CERAMIC	0.010UF	Z	KPUMUE	
C163,164			CK45FF1H103Z	CERAMIC	0.010UF	Z	XTE	
C163,164			CK45F1H103Z	CERAMIC	0.010UF	Z	EF	

E: Scandinavia & Europe **H**:Audio Club **K**: USA **P**: Canada **W**:Europe
S: South Africa **T**: England **U**: PX(Far East, Hawaii)
UE : AAFES(Europe) **X**: Australia **M**: Other Areas

⚠ indicates safety critical components.

* New Parts
Parts without **Parts No.** are not supplied.
Les articles non mentionnes dans le **Parts No.** ne sont pas fournis.
Teile ohne **Parts No.** werden nicht geliefert.

Ref. No. 参照番号	Address 位置	New Parts 新	Parts No. 部品番号	Description 部品名／規格	Destination 仕向	Remarks 備考
C165,166			CE04KW1E102M	ELECTRO 1000UF 25WV		
C167			CE04KW0J102M	ELECTRO 1000UF 6.3WV		
C170			CE04KW1V100M	ELECTRO 10UF 35WV		
C171			C90-1400-05	NP-ELEC 10UF 50WV		
C172			CK45F1H103Z	CERAMIC 0.010UF Z		
TC1			C05-0097-05	CERAMIC TRIMMER CAPACITOR(30PF	TEEF	
TC2			C05-0303-05	CERAMIC TRIMMER CAPACITOR(20PF		
TC3			C05-0097-05	CERAMIC TRIMMER CAPACITOR(30PF	TEEF	
TC4			C05-0303-05	CERAMIC TRIMMER CAPACITOR(20PF		
E1	1C		E20-0318-05	SCREW TERMINAL BOARD(3P)ANT	TEEF	
E1	1C		E20-0449-05	SCREW TERMINAL BOARD(4P)ANT	KPUMUE	
E1	1C		E20-0449-05	SCREW TERMINAL BOARD(4P)ANT	X	
E2	1B		E13-0217-05	PHONO JACK (2P)OUTPUT		
E3	1B		E11-0165-05	MINIATURE PHONE JACK(SYS CONT)	KPUMUE	
E3	1B		E11-0165-05	MINIATURE PHONE JACK(SYS CONT)	X	
CF1 ,2			L72-0140-05	CERAMIC FILTER	KPUMUE	
CF1 ,2			L72-0140-05	CERAMIC FILTER	X	
CF1 ,2			L72-0190-05	CERAMIC FILTER	TEEF	
CF3			L72-0099-05	CERAMIC FILTER		
CF4			L72-0096-05	CERAMIC FILTER		
L1			L40-1092-14	SMALL FIXED INDUCTOR(1.0UH,M)	TEEF	
L2			L31-0499-05	LW-RF COIL	TEEF	
L3			L31-0509-05	MW-RF COIL		
L4			L32-0288-05	LW OSCILLATING COIL	TEEF	
L5			L32-0277-15	MW OSCILLATING COIL		
L7			L40-1021-14	SMALL FIXED INDUCTOR(1.0MH,K)		
L8 ,9			L40-1092-14	SMALL FIXED INDUCTOR(1.0UH,M)		
L10			L79-0125-05	LC FILTER	TEEF	
L11			L79-0154-05	LC FILTER	TEEF	
L12			L30-0362-05	AM IFT		
L13			L30-0439-15	FM IFT (10.7MHZ)		
X1			L77-0573-05	CRYSTAL RESONATOR(4.5MHZ)		
X2			L78-0202-05	RESONATOR (400KHZ)		
R111			RD14AB2E330J	FL-PROOF RD 33 J 1/4W	KPUMUE	
R111			RD14AB2E330J	FL-PROOF RD 33 J 1/4W	XTE	
R111			RD14GB2E330J	FL-PROOF RD 33 J 1/4W	EF	
R154			RD14GB2E101J	FL-PROOF RD 100 J 1/4W	KPUMUE	
R154			RD14GB2E101J	FL-PROOF RD 100 J 1/4W	X	
R154			RD14GB2E221J	FL-PROOF RD 220 J 1/4W	TEEF	
R155			RD14AB2E151J	FL-PROOF RD 150 J 1/4W	TE	
R155			RD14GB2E151J	FL-PROOF RD 150 J 1/4W	EF	
R155-157			RD14AB2E101J	FL-PROOF RD 100 J 1/4W	KPUMUE	
R155-157			RD14AB2E101J	FL-PROOF RD 100 J 1/4W	X	
R156			RD14AB2E101J	FL-PROOF RD 100 J 1/4W	TE	
R156			RD14GB2E101J	FL-PROOF RD 100 J 1/4W	EF	
R157			RD14AB2E221J	FL-PROOF RD 220 J 1/4W	TE	
R157			RD14GB2E221J	FL-PROOF RD 220 J 1/4W	EF	
R161,162			RS14DB3D102J	FL-PROOF RS 1.0K J 2W	KPX	
R161,162			RS14DB3D821J	FL-PROOF RS 820 J 2W	UMUETE	
R161,162			RS14KB3D821J	FL-PROOF RS 820 J 2W	EF	
R163			R92-0173-05	RC 2.2M M 1/2W	KP	
VR1			R12-3098-05	TRIMMING POT.(33K) FM TUNE		
VR2			R12-1069-05	TRIMMING POT.(4.7K)VCO		

E: Scandinavia & Europe H:Audio Club K: USA P: Canada W:Europe
S: South Africa T: England U: PX(Far East, Hawaii)
UE : AAFES(Europe) X: Australia M: Other Areas

⚠ indicates safety critical components.

* New Parts
Parts without **Parts No.** are not supplied.
Les articles non mentionnes dans le **Parts No.** ne sont pas fournis.
Teile ohne **Parts No.** werden nicht geliefert.

Ref. No. 参照番号	Address 位置	New Parts 新	Parts No. 部品番号	Description 部品名／規格	Destination 仕向	Remarks 備考
VR3			R12-5047-05	TRIMMING PØT. (220K)SEP	TEEF	
VR4			R12-3096-05	TRIMMING PØT. (10K) AM TUNE		
S1 -18	2B,2C		S40-1064-05	PUSH SWITCH (1-6,PRESET,ETC)	TEEF	
S1 -6	2B,2C		S40-1064-05	PUSH SWITCH (1-6)	KPUMUE	
S1 -6	2B,2C		S40-1064-05	PUSH SWITCH (1-6)	X	
S8 -18	2B,2C		S40-1064-05	PUSH SWITCH (PRESET,AUTØ,ETC)	KPUMUE	
S8 -18	2B,2C		S40-1064-05	PUSH SWITCH (PRESET,AUTØ,ETC)	X	
S19	1C		S31-2075-05	SLIDE SWITCH (CHANNEL SPACE)	TEEF	
S19 ,20	1B,1C		S31-2075-05	SLIDE SWITCH	UMUE	
S21	1B		S31-2115-05	SLIDE SWITCH	UMUE	
D1			1N4148	DIØDE	EF	
D1			1SS133	DIØDE	KPUMUE	
D1			1SS133	DIØDE	XTE	
D1			1SS176	DIØDE	KPUMUE	
D1			1SS176	DIØDE	XTE	
D2 ,3			KV1236(Z2)	VARIABLE CAPACITANCE DIØDE	TEEF	
D3			KV1236(Z2)	VARIABLE CAPACITANCE DIØDE	KPUMUE	
D3			KV1236(Z2)	VARIABLE CAPACITANCE DIØDE	X	
D4 -22			1N4148	DIØDE	EF	
D4 -22			1SS133	DIØDE	TE	
D4 -22			1SS176	DIØDE	TE	
D4 ,5			1SS133	DIØDE	KPUMUE	
D4 ,5			1SS133	DIØDE	X	
D4 ,5			1SS176	DIØDE	KPUMUE	
D4 ,5			1SS176	DIØDE	X	
D7 ,8			1SS133	DIØDE	KPUMUE	
D7 ,8			1SS133	DIØDE	X	
D7 ,8			1SS176	DIØDE	KPUMUE	
D7 ,8			1SS176	DIØDE	X	
D11 -20			1SS133	DIØDE	KPUMUE	
D11 -20			1SS133	DIØDE	X	
D11 -20			1SS176	DIØDE	KPUMUE	
D11 -20			1SS176	DIØDE	X	
D22 -33			1SS133	DIØDE	UMUE	
D22 -33			1SS176	DIØDE	UMUE	
D23 -33			1SS133	DIØDE	KPX	
D23 -33			1SS176	DIØDE	KPX	
D27			1N4148	DIØDE	EF	
D27			1SS133	DIØDE	TE	
D27			1SS176	DIØDE	TE	
D30 -32			1N4148	DIØDE	EF	
D30 -32			1SS133	DIØDE	TE	
D30 -32			1SS176	DIØDE	TE	
D34			1N4148	DIØDE	EF	
D34			1SS133	DIØDE	TE	
D34			1SS176	DIØDE	TE	
D51			1B4B41	DIØDE		
D52			HZS13N(B2)	ZENER DIØDE	KPUMUE	
D52			HZS13N(B2)	ZENER DIØDE	X	
D52			HZS15N(B2)	ZENER DIØDE	TEEF	
D52			RD13ES(B2)	ZENER DIØDE	KPUMUE	
D52			RD13ES(B2)	ZENER DIØDE	X	
D52			RD15ES(B2)	ZENER DIØDE	TEEF	
D54			HZS10N(B)	ZENER DIØDE		

E: Scandinavia & Europe H:Audio Club K: USA P: Canada W:Europe
S: South Africa T: England U: PX(Far East, Hawaii)
UE : AAFES(Europe) X: Australia M: Other Areas

⚠ indicates safety critical components.

* New Parts
Parts without **Parts No.** are not supplied.
Les articles non mentionnes dans le **Parts No.** ne sont pas fournis.
Telle ohne **Parts No.** werden nicht geliefert.

Ref. No. 参照番号	Address 位置	New Parts 新	Parts No. 部品番号	Description 部品名／規格	Destination 仕向	Remarks 備考
D54			RD10ES(B)	ZENER DIODE		
D55 ,56			DSM1A1	DIODE	KPUMUE	
D55 ,56			DSM1A1	DIODE	XTE	
D55 ,56			1N4004	DIODE	EF	
D57			BZX55-C5V1	ZENER DIODE	EF	
D57			HZS5.1N(B2)	ZENER DIODE	KPUMUE	
D57			HZS5.1N(B2)	ZENER DIODE	XTE	
D57			RD5.1ES(B2)	ZENER DIODE	KPUMUE	
D57			RD5.1ES(B2)	ZENER DIODE	XTE	
D58			DSM1A1	DIODE	KPUMUE	
D58			DSM1A1	DIODE	XTE	
D58			1N4004	DIODE	EF	
D59			BZX55-C5V1	ZENER DIODE	EF	
D59			HZS5.1N(B)	ZENER DIODE	KPUMUE	
D59			HZS5.1N(B)	ZENER DIODE	XTE	
D59			RD5.1ES(B)	ZENER DIODE	KPUMUE	
D59			RD5.1ES(B)	ZENER DIODE	XTE	
FL1		*	FIP8BRM7	FLUORESCENT INDICATOR TUBE		
IC1			LA1265	IC(FM/AM TUNER)		
IC2			AN7470	IC(FM MPX)		
IC3			CX7925B	IC(FREQUENCY SYNTHESIZER PLL)		
IC4			UPD7538AC-041	IC(MICROPROCESSOR)		
IC5			LA7910	IC(ELECTRON TV TUNER BAND SEL)	TEEF	
Q1			2SC1923(R,S)	TRANSISTOR		
Q2			JC501(P,Q)	TRANSISTOR	EF	
Q2			2SC1740S(Q,R)	TRANSISTOR	KPUMUE	
Q2			2SC1740S(Q,R)	TRANSISTOR	XTE	
Q2			2SC945(A)(Q,P)	TRANSISTOR	KPUMUE	
Q2			2SC945(A)(Q,P)	TRANSISTOR	XTE	
Q3			2SC1845(F,E)	TRANSISTOR		
Q4			2SK364(GR,BL)	FET	TEEF	
Q5 -8		*	JC501(P,Q)	TRANSISTOR	EF	
Q5 -8			2SC1740S(Q,R)	TRANSISTOR	TE	
Q5 -8			2SC945(A)(Q,P)	TRANSISTOR	TE	
Q6			2SC1740S(Q,R)	TRANSISTOR	KPUMUE	
Q6			2SC1740S(Q,R)	TRANSISTOR	X	
Q6			2SC945(A)(Q,P)	TRANSISTOR	KPUMUE	
Q6			2SC945(A)(Q,P)	TRANSISTOR	X	
Q9 ,10			2SK364(GR,BL)	FET	TEEF	
Q11			2SC1740S(Q,R)	TRANSISTOR	KPUMUE	
Q11			2SC1740S(Q,R)	TRANSISTOR	X	
Q11			2SC945(A)(Q,P)	TRANSISTOR	KPUMUE	
Q11			2SC945(A)(Q,P)	TRANSISTOR	X	
Q11 ,12		*	JC501(P,Q)	TRANSISTOR	EF	
Q11 ,12			2SC1740S(Q,R)	TRANSISTOR	TE	
Q11 ,12			2SC945(A)(Q,P)	TRANSISTOR	TE	
Q13			2SC1740S(Q,R)	TRANSISTOR	KPUMUE	
Q13			2SC1740S(Q,R)	TRANSISTOR	X	
Q13			2SC945(A)(Q,P)	TRANSISTOR	KPUMUE	
Q13			2SC945(A)(Q,P)	TRANSISTOR	X	
Q14 ,15			2SA733(A)(Q,P)	TRANSISTOR	KPUMUE	
Q14 ,15			2SA733(A)(Q,P)	TRANSISTOR	X	
Q14 ,15			2SA933S(Q,R)	TRANSISTOR	KPUMUE	
Q14 ,15			2SA933S(Q,R)	TRANSISTOR	X	
Q15		*	JA501(P,Q)	TRANSISTOR	EF	

E: Scandinavia & Europe H:Audio Club K: USA P: Canada W:Europe
S: South Africa T: England U: PX(Far East, Hawaii)
UE: AAFES(Europe) X: Australia M: Other Areas

⚠ indicates safety critical components.

* New Parts
Parts without **Parts No.** are not supplied.
Les articles non mentionnes dans le **Parts No.** ne sont pas fournis.
Teile ohne **Parts No.** werden nicht geliefert.

Ref. No. 参照番号	Address 位置	New Parts 新	Parts No. 部品番号	Description 部品名／規格	Destination 仕向	Remarks 備考
Q15			2SA733(A)(Q,P)	TRANSISTOR	TE	
Q15			2SA933S(Q,R)	TRANSISTOR	TE	
Q16 ,17			2SD1302(S,T)	TRANSISTOR		
Q18		*	JA501(P,Q)	TRANSISTOR	EF	
Q18			2SA733(A)(Q,P)	TRANSISTOR	KPUMUE	
Q18			2SA733(A)(Q,P)	TRANSISTOR	XTE	
Q18			2SA933S(Q,R)	TRANSISTOR	KPUMUE	
Q18			2SA933S(Q,R)	TRANSISTOR	XTE	
Q19			2SD1266(Q,P)	TRANSISTOR		
Q20 ,21		*	JC501(P,Q)	TRANSISTOR	EF	
Q20 ,21			2SC1740S(Q,R)	TRANSISTOR	KPUMUE	
Q20 ,21			2SC1740S(Q,R)	TRANSISTOR	XTE	
Q20 ,21			2SC945(A)(Q,P)	TRANSISTOR	KPUMUE	
Q20 ,21			2SC945(A)(Q,P)	TRANSISTOR	XTE	
Q22			2SA999(E,F)	TRANSISTOR		
Q23		*	JC501(P,Q)	TRANSISTOR	EF	
Q23			2SC1740S(Q,R)	TRANSISTOR	KPUMUE	
Q23			2SC1740S(Q,R)	TRANSISTOR	XTE	
Q23			2SC945(A)(Q,P)	TRANSISTOR	KPUMUE	
Q23			2SC945(A)(Q,P)	TRANSISTOR	XTE	
Q24			2SA733(A)(Q,P)	TRANSISTOR	KPX	
Q24			2SA933S(Q,R)	TRANSISTOR	KPX	
Q24 ,25		*	JA501(P,Q)	TRANSISTOR	EF	
Q24 ,25			2SA733(A)(Q,P)	TRANSISTOR	UMUETE	
Q24 ,25			2SA933S(Q,R)	TRANSISTOR	UMUETE	
Q26		*	JC501(P,Q)	TRANSISTOR	EF	
Q26			2SC1740S(Q,R)	TRANSISTOR	KPUMUE	
Q26			2SC1740S(Q,R)	TRANSISTOR	XTE	
Q26			2SC945(A)(Q,P)	TRANSISTOR	KPUMUE	
Q26			2SC945(A)(Q,P)	TRANSISTOR	XTE	
Q27		*	JA501(P,Q)	TRANSISTOR	EF	
Q27			2SA733(A)(Q,P)	TRANSISTOR	KPUMUE	
Q27			2SA733(A)(Q,P)	TRANSISTOR	XTE	
Q27			2SA933S(Q,R)	TRANSISTOR	KPUMUE	
Q27			2SA933S(Q,R)	TRANSISTOR	XTE	
Q28		*	JC501(P,Q)	TRANSISTOR	EF	
Q28			2SC1740S(Q,R)	TRANSISTOR	KPUMUE	
Q28			2SC1740S(Q,R)	TRANSISTOR	XTE	
Q28			2SC945(A)(Q,P)	TRANSISTOR	KPUMUE	
Q28			2SC945(A)(Q,P)	TRANSISTOR	XTE	
Q29 ,30		*	JA501(P,Q)	TRANSISTOR	EF	
Q29 ,30			2SA733(A)(Q,P)	TRANSISTOR	KPUMUE	
Q29 ,30			2SA733(A)(Q,P)	TRANSISTOR	XTE	
Q29 ,30			2SA933S(Q,R)	TRANSISTOR	KPUMUE	
Q29 ,30			2SA933S(Q,R)	TRANSISTOR	XTE	
Q31		*	JC501(P,Q)	TRANSISTOR	EF	
Q31			2SC1740S(Q,R)	TRANSISTOR	KPUMUE	
Q31			2SC1740S(Q,R)	TRANSISTOR	XTE	
Q31			2SC945(A)(Q,P)	TRANSISTOR	KPUMUE	
Q31			2SC945(A)(Q,P)	TRANSISTOR	XTE	
TUNER UNIT (X05-3350-10) Singapore made						
C1			C91-0769-05	CERAMIC 0.01UF M		
C2			CC45FTH1H101J	CERAMIC 100PF J	TE	
C3 -8			CK45FF1H223Z	CERAMIC 0.022UF Z	TE	
C7 ,8			CK45FF1H223Z	CERAMIC 0.022UF Z	KPUMUE	

E: Scandinavia & Europe H:Audio Club K: USA P: Canada W:Europe
S: South Africa T: England U: PX(Far East, Hawaii)
UE : AAFES(Europe) X: Australia M: Other Areas

⚠ indicates safety critical components.

* New Parts
Parts without **Parts No.** are not supplied.
Les articles non mentionnes dans le **Parts No.** ne sont pas fournis.
Telle ohne **Parts No.** werden nicht geliefert.

Ref. No. 参照番号	Address 位置	New Parts 新	Parts No. 部品番号	Description 部品名／規格			Destination 仕向	Remarks 備考
C7 ,8			CK45FF1H223Z	CERAMIC	0.022UF	Z	X	
C9			CC45FCH1H151J	CERAMIC	150PF	J	TE	
C10			CQ09FS1H221JY0	POLYSTY	220PF	J	TE	
C11			C91-0769-05	CERAMIC	0.01UF	M		
C12			CQ09FS1H391JY0	POLYSTY	390PF	J		
C13 ,14			CK45FF1H223Z	CERAMIC	0.022UF	Z		
C15		*	CE04LW1V100M	ELECTRO	10UF	35WV		
C16			CC45FSL1H101J	CERAMIC	100PF	J		
C17		*	CE04LW1H4R7M	ELECTRO	4.7UF	50WV		
C18		*	CE04LW1H2R2M	ELECTRO	2.2UF	50WV		
C19		*	CE04LW1H4R7M	ELECTRO	4.7UF	50WV		
C20			CK45FF1H223Z	CERAMIC	0.022UF	Z		
C22			CK45FF1H223Z	CERAMIC	0.022UF	Z		
C23 ,24			CK45FF1H103Z	CERAMIC	0.010UF	Z		
C25			CF92FV1H153J	MF	0.015UF	J		
C26		*	CE04LW1V100M	ELECTRO	10UF	35WV		
C27			CQ09FS1H471J	POLYSTY	470PF	J		
C28		*	CE04LW1H2R2M	ELECTRO	2.2UF	50WV		
C29		*	CE04LW1H3R3M	ELECTRO	3.3UF	50WV		
C30			CF92FV1H473J	MF	0.047UF	J		
C31			CK45FB1H561K	CERAMIC	560PF	K		
C32		*	CE04LW1HR47M	ELECTRO	0.47UF	50WV		
C33 ,34		*	CE04LW1C220M	ELECTRO	22UF	16WV	TE	
C35 ,36			CC45FSL1H151J	CERAMIC	150PF	J	KPUMUE	
C35 ,36			CC45FSL1H151J	CERAMIC	150PF	J	X	
C35 ,36			CK45FB1H102K	CERAMIC	1000PF	K	TE	
C37			CC45FSL1H221J	CERAMIC	220PF	J	TE	
C38 ,39		*	CE04LW1HR33M	ELECTRO	0.33UF	50WV	KPUMUE	
C38 ,39		*	CE04LW1HR33M	ELECTRO	0.33UF	50WV	X	
C38 ,39		*	CE04LW1H2R2M	ELECTRO	2.2UF	50WV	TE	
C40 ,41			CF92FV1H153J	MF	0.015UF	J	UMUEX	
C40 ,41			CF92FV1H223J	MF	0.022UF	J	KP	
C40 ,41			CF92FV1H472J	MF	4700PF	J	TE	
C42 ,43			CF92FV1H432J	MF	4300PF	J	UMUE	
C44			C91-0769-05	CERAMIC	0.01UF	M		
C45		*	CE04LW1V100M	ELECTRO	10UF	35WV		
C46			CK45FF1H223Z	CERAMIC	0.022UF	Z		
C47		*	CE04LW1H010M	ELECTRO	1.0UF	50WV		
C48			CK45FF1H473Z	CERAMIC	0.047UF	Z		
C49		*	CE04LW1H010M	ELECTRO	1.0UF	50WV		
C50		*	CE04LW1HR47M	ELECTRO	0.47UF	50WV		
C51			CK45FF1H103Z	CERAMIC	0.010UF	Z		
C52		*	CE04LW1H010M	ELECTRO	1.0UF	50WV		
C53		*	CE04LW1C470M	ELECTRO	47UF	16WV		
C55 ,56			CC45FSL1H101J	CERAMIC	100PF	J	TE	
C101-103			CK45FB1H102K	CERAMIC	1000PF	K		
C104,105			CK45FF1H103Z	CERAMIC	0.010UF	Z		
C106			CC45FSL1H560J	CERAMIC	56PF	J		
C107			CC45FSL1H270J	CERAMIC	27PF	J		
C108,109			CC45FSL1H101J	CERAMIC	100PF	J		
C110			CK45FB1H102K	CERAMIC	1000PF	K		
C111			C91-0757-05	CERAMIC	0.001UF	K		
C112		*	CE04EW0J222M	ELECTRO	2200UF	6.3WV		
C113			CK45FF1H103Z	CERAMIC	0.010UF	Z		
C114			CK45FB1H102K	CERAMIC	1000PF	K		

E: Scandinavia & Europe H:Audio Club K: USA P: Canada W:Europe
S: South Africa T: England U: PX(Far East, Hawaii)
UE : AAFES(Europe) X: Australia M: Other Areas

⚠ indicates safety critical components.

* New Parts
Parts without **Parts No.** are not supplied.
Les articles non mentionnes dans le **Parts No.** ne sont pas fournis.
Teile ohne **Parts No.** werden nicht geliefert.

Ref. No. 参照番号	Address 位置	New Parts 新	Parts No. 部品番号	Description 部品名／規格	Destination 仕向	Remarks 備考
C115		*	CE04LW0J101M	ELECTR0 100UF 6.3WV		
C116		*	CE04LW1V330M	ELECTR0 33UF 35WV		
C117,118			CC45FSL1H221J	CERAMIC 220PF J	KPUMUE	
C117,118			CC45FSL1H221J	CERAMIC 220PF J	X	
C119			CK45FF1H473Z	CERAMIC 0.047UF Z	KPUMUE	
C119			CK45FF1H473Z	CERAMIC 0.047UF Z	X	
C120		*	CE04LW1HR47M	ELECTR0 0.47UF 50WV		
C150		*	CE04LW1C470M	ELECTR0 47UF 16WV		
C151-153			CK45FF1H103Z	CERAMIC 0.010UF Z		
C154		*	CE04EW1V102M	ELECTR0 1000UF 35WV		
C155		*	CE04EW1C471M	ELECTR0 470UF 16WV		
C156		*	CE04EW1E221M	ELECTR0 220UF 25WV		
C157		*	CE04EW1C221M	ELECTR0 220UF 16WV		
C158		*	CE04LW1V100M	ELECTR0 10UF 35WV		
C160		*	CE04LW1V100M	ELECTR0 10UF 35WV		
C161			C91-0769-05	CERAMIC 0.01UF M		
C163,164			CK45FF1H103Z	CERAMIC 0.010UF Z		
C165,166		*	CE04EW1E102M	ELECTR0 1000UF 25WV		
C167		*	CE04EW0J102M	ELECTR0 1000UF 6.3WV		
C170		*	CE04LW1V100M	ELECTR0 10UF 35WV		
C171			C90-1400-05	NP-ELEC 10UF 50WV		
C172			CK45F1H103Z	CERAMIC 0.010UF Z		
TC1			C05-0097-05	CERAMIC TRIMMER CAPACITOR(30PF	TE	
TC2			C05-0303-05	CERAMIC TRIMMER CAPACITOR(20PF		
TC3			C05-0097-05	CERAMIC TRIMMER CAPACITOR(30PF	TE	
TC4			C05-0303-05	CERAMIC TRIMMER CAPACITOR(20PF		
E1	1C		E20-0318-05	SCREW TERMINAL BOARD(2P)ANT	TE	
E1	1C		E20-0449-05	SCREW TERMINAL BOARD(4P)ANT	KPUMUE	
E1	1C		E20-0449-05	SCREW TERMINAL BOARD(4P)ANT	X	
E2	1C		E13-0217-05	PHONO JACK (2P)OUTPUT		
E3	1C		E11-0165-05	MINIATURE PHONE JACK(SYS CONT)	KPUMUE	
E3	1C		E11-0165-05	MINIATURE PHONE JACK(SYS CONT)	X	
CF1 ,2			L72-0140-05	CERAMIC FILTER	KPUMUE	
CF1 ,2			L72-0140-05	CERAMIC FILTER	X	
CF1 ,2			L72-0190-05	CERAMIC FILTER	TE	
CF3			L72-0099-05	CERAMIC FILTER		
CF4			L72-0096-05	CERAMIC FILTER		
L1			L40-1092-14	SMALL FIXED INDUCTOR(1.0UH,M)	TE	
L2			L31-0499-05	LW-RF COIL	TE	
L3			L31-0509-05	MW-RF COIL		
L4			L32-0288-05	LW OSCILLATING COIL	TE	
L5			L32-0277-15	MW OSCILLATING COIL		
L7			L40-1021-14	SMALL FIXED INDUCTOR(1.0MH,K)		
L8 ,9			L40-1092-14	SMALL FIXED INDUCTOR(1.0UH,M)		
L10			L79-0125-05	LC FILTER	TE	
L11			L79-0154-05	LC FILTER	TE	
L12			L30-0362-05	AM IFT		
L13			L30-0439-15	FM IFT		
X1			L77-0573-05	CRYSTAL RESONATOR(4.5MHZ)		
X2			L78-0202-05	RESONATOR (400KHZ)		
R111			RD14GB2E330J	FL-PROOF RD 33 J 1/4W		
R154			RD14GB2E221J	FL-PROOF RD 220 J 1/4W	TE	
R154-157			RD14GB2E101J	FL-PROOF RD 100 J 1/4W	KPUMUE	

E: Scandinavia & Europe H:Audio Club K: USA P: Canada W:Europe
S: South Africa T: England U: PX(Far East, Hawaii)
UE: AAFES(Europe) X: Australia M: Other Areas

⚠ indicates safety critical components.

* New Parts
Parts without **Parts No.** are not supplied.
Les articles non mentionnes dans le **Parts No.** ne sont pas fournis.
Telle ohne **Parts No.** werden nicht geliefert.

Ref. No. 参照番号	Address 位置	New Parts 新	Parts No. 部品番号	Description 部品名／規格	Destination 仕向	Remarks 備考
R154-157			RD14GB2E101J	FL-PR00F RD 100 J 1/4W	X	
R155			RD14GB2E151J	FL-PR00F RD 150 J 1/4W	TE	
R156			RD14GB2E101J	FL-PR00F RD 100 J 1/4W	TE	
R157			RD14GB2E221J	FL-PR00F RD 220 J 1/4W	TE	
R161,162			RS14KB3D102J	FL-PR00F RS 1.0K J 2W	KPX	
R161,162			RS14KB3D821J	FL-PR00F RS 820 J 2W	UMUETE	
R163			R92-0173-05	RC 2.2M M 1/2W	KP	
VR1			R12-3098-05	TRIMMING POT. (33K) FM TUNE		
VR2			R12-1069-05	TRIMMING POT. (4.7K)VCO		
VR3			R12-5047-05	TRIMMING POT. (220K)SEP	TE	
VR4			R12-3096-05	TRIMMING POT. (10K) AM TUNE		
S1 -18	1C		S40-1064-05	PUSH SWITCH (1-6,PRESET,ETC)	TE	
S1 -6	1C		S40-1064-05	PUSH SWITCH (1-6)	KPUMUE	
S1 -6	1C		S40-1064-05	PUSH SWITCH (1-6)	X	
S8 -18	1C		S40-1064-05	PUSH SWITCH (PRESET,AUTO,ETC)	KPUMUE	
S8 -18	1C		S40-1064-05	PUSH SWITCH (PRESET,AUTO,ETC)	X	
S19	1C		S31-2075-05	SLIDE SWITCH (CHANNEL SPACE)	TE	
S19 ,20	1C		S31-2075-05	SLIDE SWITCH	UMUE	
⚠ S21	1C		S31-2115-05	SLIDE SWITCH	UMUE	
D1			1SS133	DIODE		
D1			1SS176	DIODE		
D2 ,3			KV1236(Z2)	VARIABLE CAPACITANCE DIODE	TE	
D3			KV1236(Z2)	VARIABLE CAPACITANCE DIODE	KPUMUE	
D3			KV1236(Z2)	VARIABLE CAPACITANCE DIODE	X	
D4 -22			1SS133	DIODE	TE	
D4 -22			1SS176	DIODE	TE	
D4 ,5			1SS133	DIODE	KPUMUE	
D4 ,5			1SS133	DIODE	X	
D4 ,5			1SS176	DIODE	KPUMUE	
D4 ,5			1SS176	DIODE	X	
D7 ,8			1SS133	DIODE	KPUMUE	
D7 ,8			1SS133	DIODE	X	
D7 ,8			1SS176	DIODE	KPUMUE	
D7 ,8			1SS176	DIODE	X	
D11 -20			1SS133	DIODE	KPUMUE	
D11 -20			1SS176	DIODE	KPUMUE	
D11 -21			1SS133	DIODE	X	
D11 -21			1SS176	DIODE	X	
D22 -33			1SS133	DIODE	UMUE	
D22 -33			1SS176	DIODE	UMUE	
D23 -33			1SS133	DIODE	KPX	
D23 -33			1SS176	DIODE	KPX	
D27			1SS133	DIODE	TE	
D27			1SS176	DIODE	TE	
D30 -32			1SS133	DIODE	TE	
D30 -32			1SS176	DIODE	TE	
D34			1SS133	DIODE	TE	
D34			1SS176	DIODE	TE	
D51			1B4B41	DIODE		
D52			HZS13N(B2)	ZENER DIODE	KPUMUE	
D52			HZS13N(B2)	ZENER DIODE	X	
D52		*	HZS15N(B2)	ZENER DIODE	TE	
D52			RD13ES(B2)	ZENER DIODE	KPUMUE	
D52			RD13ES(B2)	ZENER DIODE	X	

E: Scandinavia & Europe H:Audio Club K: USA P: Canada W:Europe
S: South Africa T: England U: PX(Far East, Hawaii)
UE : AAFES(Europe) X: Australia M: Other Areas

⚠ indicates safety critical components.

* New Parts
Parts without **Parts No.** are not supplied.
Les articles non mentionnes dans le **Parts No.** ne sont pas fournis.
Teile ohne **Parts No.** werden nicht geliefert.

Ref. No. 参照番号	Address 位置	New Parts 新	Parts No. 部品番号	Description 部品名／規格	Destination 仕向	Remarks 備考
D52		*	RD15ES(B2)	ZENER DIODE	TE	
D54			HZS10N(B)	ZENER DIODE		
D54			RD10ES(B)	ZENER DIODE		
D55 ,56			DSM1A1	DIODE		
D57			HZS5.1N(B2)	ZENER DIODE		
D57			RD5.1ES(B2)	ZENER DIODE		
D58			DSM1A1	DIODE		
D59			HZS5.1N(B)	ZENER DIODE		
D59			RD5.1ES(B)	ZENER DIODE		
FL1			FIP8BRM7	FLUORESCENT INDICATOR TUBE		
IC1			LA1265	IC(FM/AM TUNER)		
IC2			AN7470	IC(FM MPX)		
IC3			CX7925B	IC(FREQUENCY SYNTHESIZER PLL)		
IC4		*	UPD7538AC-041	IC(MICROPROCESSOR)		
IC5			LA7910	IC(ELECTRON TV TUNER BAND SEL)	TE	
Q1			2SC1923(R,O)	TRANSISTOR		
Q2			2SC1740S(Q,R)	TRANSISTOR		
Q2			2SC945(A)(Q,P)	TRANSISTOR		
Q3			2SC1845(F,E)	TRANSISTOR		
Q4			2SK364(GR,BL)	FET	TE	
Q5 -8			2SC1740S(Q,R)	TRANSISTOR	TE	
Q5 -8			2SC945(A)(Q,P)	TRANSISTOR	TE	
Q6			2SC1740S(Q,R)	TRANSISTOR	KPUMUE	
Q6			2SC1740S(Q,R)	TRANSISTOR	X	
Q6			2SC945(A)(Q,P)	TRANSISTOR	KPUMUE	
Q6			2SC945(A)(Q,P)	TRANSISTOR	X	
Q9 ,10			2SK364(GR,BL)	FET	TE	
Q11			2SC1740S(Q,R)	TRANSISTOR	KPUMUE	
Q11			2SC1740S(Q,R)	TRANSISTOR	X	
Q11			2SC945(A)(Q,P)	TRANSISTOR	KPUMUE	
Q11			2SC945(A)(Q,P)	TRANSISTOR	X	
Q11 ,12			2SC1740S(Q,R)	TRANSISTOR	TE	
Q11 ,12			2SC945(A)(Q,P)	TRANSISTOR	TE	
Q13			2SC1740S(Q,R)	TRANSISTOR	KPUMUE	
Q13			2SC1740S(Q,R)	TRANSISTOR	X	
Q13			2SC945(A)(Q,P)	TRANSISTOR	KPUMUE	
Q13			2SC945(A)(Q,P)	TRANSISTOR	X	
Q14 ,15			2SA733(A)(Q,P)	TRANSISTOR	KPUMUE	
Q14 ,15			2SA733(A)(Q,P)	TRANSISTOR	X	
Q14 ,15			2SA933S(Q,R)	TRANSISTOR	KPUMUE	
Q14 ,15			2SA933S(Q,R)	TRANSISTOR	X	
Q15			2SA733(A)(Q,P)	TRANSISTOR	TE	
Q15			2SA933S(Q,R)	TRANSISTOR	TE	
Q16 ,17			2SD1302(S,T)	TRANSISTOR		
Q18			2SA733(A)(Q,P)	TRANSISTOR		
Q18			2SA933S(Q,R)	TRANSISTOR		
Q19			2SD1266(Q,P)	TRANSISTOR		
Q20 ,21			2SC1740S(Q,R)	TRANSISTOR		
Q20 ,21			2SC945(A)(Q,P)	TRANSISTOR		
Q22			2SA999(E,F)	TRANSISTOR		
Q23			2SC1740S(Q,R)	TRANSISTOR		
Q23			2SC945(A)(Q,P)	TRANSISTOR		
Q24			2SA733(A)(Q,P)	TRANSISTOR	KPX	
Q24			2SA933S(Q,R)	TRANSISTOR	KPX	
Q24 ,25			2SA733(A)(Q,P)	TRANSISTOR	UMUETE	

E: Scandinavia & Europe H:Audio Club K: USA P: Canada W:Europe
S: South Africa T: England U: PX(Far East, Hawaii)
UE : AAFES(Europe) X: Australia M: Other Areas

⚠ indicates safety critical components.

* New Parts
Parts without **Parts No.** are not supplied.
Les articles non mentionnes dans le **Parts No.** ne sont pas fournis.
Teile ohne **Parts No.** werden nicht geliefert.

Ref. No. 参照番号	Address 位置	New Parts 新	Parts No. 部品番号	Description 部品名／規格	Destination 仕向	Remarks 備考
Q24 ,25			2SA733(A)(Q,P)	TRANSISTOR	E	
Q24 ,25			2SA933S(Q,R)	TRANSISTOR	UMUETE	
Q26			2SC1740S(Q,R)	TRANSISTOR		
Q26			2SC945(A)(Q,P)	TRANSISTOR		
Q27			2SA733(A)(Q,P)	TRANSISTOR		
Q27			2SA933S(Q,R)	TRANSISTOR		
Q28			2SC1740S(Q,R)	TRANSISTOR		
Q28			2SC945(A)(Q,P)	TRANSISTOR		
Q29 ,30			2SA733(A)(Q,P)	TRANSISTOR		
Q29 ,30			2SA933S(Q,R)	TRANSISTOR		
Q31			2SC1740S(Q,R)	TRANSISTOR		
Q31			2SC945(A)(Q,P)	TRANSISTOR		
FRONT-END UNIT (X86-1040-10)						
C1		*	CC41FSL1H060D	CYLND CHIP C 6.0PF D	KPUMUE	
C1		*	CC41FSL1H060D	CYLND CHIP C 6.0PF D	X	
C2			C93-0012-05	CYLND CHIP C 0.01UF M	KPUMUE	
C2			C93-0012-05	CYLND CHIP C 0.01UF M	X	
C3		*	CC41FSL1H100D	CYLND CHIP C 10PF D		
C4			C93-0012-05	CYLND CHIP C 0.01UF M		
C5			CK41FB1H221K	CYLND CHIP C 220PF K		
C6		*	CC41FSL1H070D	CYLND CHIP C 7.0PF D		
C8			CC41FSL1H020C	CYLND CHIP C 2.0PF C		
C9			CK41FB1H221K	CYLND CHIP C 220PF K		
C10			C93-0012-05	CYLND CHIP C 0.01UF M		
C11		*	CC41FSL1H080D	CYLND CHIP C 8.0PF D		
C12		*	CC41FSL1H010C	CYLND CHIP C 1.0PF C		
C14			C93-0012-05	CYLND CHIP C 0.01UF M		
C16		*	CC41FSL1H080D	CYLND CHIP C 8.0PF D		
C17			CC41FSL1H330J	CYLND CHIP C 33PF J		
C18		*	CC41FSL1H150J	CYLND CHIP C 15PF J		
C19		*	CC41FSL1H010C	CYLND CHIP C 1.0PF C		
C20			CK41FY1E102M	CYLND CHIP C 1000PF M		
C21		*	CC41FSL1H470J	CYLND CHIP C 47PF J		
TC1			C05-0302-05	CERAMIC TRIMMER CAPACITOR(11PF		
L1		*	L31-0551-05	FM-RF COIL		
L2		*	L31-0552-05	FM-RF COIL		
L3		*	L31-0553-05	FM-RF COIL		
L4			L40-1092-16	SMALL FIXED INDUCTOR(1UH,M)		
L7			L32-0318-05	FM OSCILLATING COIL		
T1		*	L30-0427-15	FM IFT		
-			R92-0338-05	CLYND CHIP R 0 OHM		
-			R92-0350-05	JUMPER WIRE (RESISTOR TYPE)		
R1 ,2			RD41FB2B473J	CYLND CHIP R 47K J 1/8W		
R3		*	RD41FB2B470J	CYLND CHIP R 47 J 1/8W		
R4			RD41FB2B331J	CYLND CHIP R 330 J 1/8W		
R5			RD41FB2B101J	CYLND CHIP R 100 J 1/8W		
R6			RD41FB2B473J	CYLND CHIP R 47K J 1/8W		
R9			RD41FB2B105J	CYLND CHIP R 1.0M J 1/8W		
R11			RD41FB2B101J	CYLND CHIP R 100 J 1/8W		
R14			RD41FB2B472J	CYLND CHIP R 4.7K J 1/8W		
R15 ,16			RD41FB2B223J	CYLND CHIP R 22K J 1/8W		
R17			RD41FB2B222J	CYLND CHIP R 2.2K J 1/8W		
R18			RD41FB2B224J	CYLND CHIP R 220K J 1/8W		

E: Scandinavia & Europe H:Audio Club K: USA P: Canada W:Europe
S: South Africa T: England U: PX(Far East, Hawaii)
UE : AAFES(Europe) X: Australia M: Other Areas

⚠ indicates safety critical components.

* New Parts
Parts without **Parts No.** are not supplied.
Les articles non mentionnes dans le **Parts No.** ne sont pas fournis.
Teile ohne **Parts No.** werden nicht geliefert.

Ref. No. 参照番号	Address 位置	New Parts 新	Parts No. 部品番号	Description 部品名／規格	Destination 仕向	Remarks 備考
R19 ,20			RD41FB2B101J	CYLND CHIP R 100 J 1/8W		
D1		*	KV1310A-3	VARIABLE CAPACITANCE DIODE		
Q1			2SK302(Y,GR)	FET		
Q2		*	2SC2714(O)	TRANSISTOR		
Q4 ,5		*	2SC2714(R,O)	TRANSISTOR		
FRONT-END UNIT (X86-1052-70)						
C1		*	CC41FSL1H060D	CYLND CHIP C 6.0PF D		
C2			C93-0012-05	CYLND CHIP C 0.01UF M		
C3		*	CC41FSL1H100D	CYLND CHIP C 10PF D		
C4			C93-0012-05	CYLND CHIP C 0.01UF M		
C5			CK41FB1H221K	CYLND CHIP C 220PF K		
C6		*	CC41FSL1H100D	CYLND CHIP C 10PF D		
C7		*	CC41FSL1H060D	CYLND CHIP C 6.0PF D		
C8		*	CC41FSL1H100D	CYLND CHIP C 10PF D		
C9			CK41FB1H221K	CYLND CHIP C 220PF K		
C10			C93-0012-05	CYLND CHIP C 0.01UF M		
C11			CK41FY1E102M	CYLND CHIP C 1000PF M		
C12		*	CC41FSL1H030C	CYLND CHIP C 3.0PF C		
C13		*	CC41FSL1H100D	CYLND CHIP C 10PF D		
C14			C93-0012-05	CYLND CHIP C 0.01UF M		
C16		*	CC41FSL1H080D	CYLND CHIP C 8.0PF D		
C17		*	CC41FSL1H330J	CYLND CHIP C 33PF J		
C18		*	CC41FSL1H150J	CYLND CHIP C 15PF J		
C19		*	CC41FSL1H010C	CYLND CHIP C 1.0PF C		
C20			CK41FY1E102M	CYLND CHIP C 1000PF M		
C21		*	CC41FSL1H470J	CYLND CHIP C 47PF J		
TC1			C05-0302-05	CERAMIC TRIMMER CAPACITOR(11PF		
L1			L31-0551-05	FM-RF COIL		
L2			L31-0552-05	FM-RF COIL		
L3			L31-0553-05	FM-RF COIL		
L4			L40-1092-16	SMALL FIXED INDUCTOR(1UH,M)		
L5		*	L31-0554-05	FM-RF COIL		
L7			L32-0318-05	FM OSCILLATING COIL		
T1			L30-0427-15	FM IFT		
59			R92-0338-05	CLYND CHIP R 0 OHM		
60			R92-0350-05	JUMPER WIRE (RESISTOR TYPE)		
R1			RD41FB2B473J	CYLND CHIP R 47K J 1/8W		
R2			RD41FB2B104J	CYLND CHIP R 100K J 1/8W		
R3			RD41FB2B470J	CYLND CHIP R 47 J 1/8W		
R4			RD41FB2B331J	CYLND CHIP R 330 J 1/8W		
R5			RD41FB2B101J	CYLND CHIP R 100 J 1/8W		
R6 ,7			RD41FB2B473J	CYLND CHIP R 47K J 1/8W		
R8 ,9			RD41FB2B104J	CYLND CHIP R 100K J 1/8W		
R11			RD41FB2B101J	CYLND CHIP R 100 J 1/8W		
R12			RD41FB2B681J	CYLND CHIP R 680 J 1/8W		
R13			RD41FB2B104J	CYLND CHIP R 100K J 1/8W		
R14			RD41FB2B472J	CYLND CHIP R 4.7K J 1/8W		
R15 ,16			RD41FB2B223J	CYLND CHIP R 22K J 1/8W		
R17			RD41FB2B222J	CYLND CHIP R 2.2K J 1/8W		
R18			RD41FB2B224J	CYLND CHIP R 220K J 1/8W		
R19 ,20			RD41FB2B101J	CYLND CHIP R 100 J 1/8W		
D1 -4			KV1310-4	VARIABLE CAPACITANCE DIODE		

E: Scandinavia & Europe H:Audio Club K: USA P: Canada W:Europe
S: South Africa T: England U: PX(Far East, Hawaii)
UE: AAFES(Europe) X: Australia M: Other Areas

⚠ indicates safety critical components.

* New Parts
Parts without **Parts No.** are not supplied.
Les articles non mentionnes dans le **Parts No.** ne sont pas fournis.
Telle ohne **Parts No.** werden nicht geliefert.

Ref. No. 参照番号	Address 位置	New Parts 新	Parts No. 部品番号	Description 部品名／規格	Destination 仕向	Remarks 備考
Q1			2SK302(Y,GR)	FET		
Q2		*	3SK131(M,L)	FET		
Q3			2SK302(Y,GR)	FET		
Q4 ,5		*	2SC2714(R,O)	TRANSISTOR		

E: Scandinavia & Europe H:Audio Club K: USA P: Canada W:Europe
S: South Africa T: England U: PX(Far East, Hawaii)
UE : AAFES(Europe) X: Australia M: Other Areas

⚠ indicates safety critical components.

SPECIFICATIONS

FM Tuner Section

Tuning frequency range	87.5 MHz – 108 MHz
Antenna impedance	300 ohms balanced 75 ohms unbalanced
Sensitivity	
Usable sensitivity (IHF): MONO	0.95 μV (10.8 dBf)
50 dB quieting sensitivity (IHF)	
Mono:	3.0 μV (14.7 dBf)
Stereo:	49 μV (39.0 dBf)
Total harmonic distortion	
Mono: (75 kHz Dev.)	
100 Hz	0.40 %
1,000 Hz	0.30 %
50 Hz ~ 10,000 Hz	0.50 %
Stereo: (75 kHz Dev.)	
100 Hz	0.50 %
1,000 Hz	0.30 %
50 Hz ~ 10,000 Hz	0.70 %
Signal-to-Noise ratio	
Mono: (75 kHz Dev.) 65 dBf input	76 dB
85 dBf input	77 dB
Stereo: (75 kHz Dev.) 65 dBf input	72 dB
85 dBf input	74 dB
Capture ratio	1.2 dB
Altemate channel selectivity	
IHF: ± 400 kHz	50 dB
Stereo separation	
1,000 Hz	40 dB
50 Hz ~ 10,000 Hz	35 dB
Frequency response	
30 Hz ~ 15,000 Hz	+0.5 dB, –2.0 dB
Image rejection ratio (98 MHz)	50 dB
IF rejection ratio (98 MHz)	95 dB
Spurious rejection ratio (98 MHz)	80 dB
AM suppression ratio	70 dB
Sub-carrier suppression ratio	37 dB
Output level/impedance	
FM: 1,000 Hz, 100 % Dev. (fixed)	0.6 V/3.3 kohms

AM Tuner Section

Tuning frequency range	531 kHz – 1,602 kHz (9 kHz step) 530 kHz – 1,610 kHz (10 kHz step)
Usable Sensitivity	14 μV (400 μV/m)
Signal-to-Noise ratio	
(30 % Mod; 1 mV input)	50 dB
Total harmonic distortion	0.5 %
Image rejection ratio	40 dB
IF rejection ratio	50 dB
Selectivity (IHF)	25 dB
Output level/impedance 400 Hz,	
30 % mod.	0.18V/3.3 kohms

General

Power Consumption	9 W
Dimensions	W: 420 mm (16-9/16") H: 74 mm (2-15/16") D: 267 mm (10-1/2")
Weight (Net)	2.8 kg(6.2 lb)

Note:
We follow a policy of continuous advancements in development. For this reason specifications may be changed without notice.

Note:
Component and circuitry are subject to modification to insure best operation under differing local conditions. This manual is based on the Europe (E) standard, and provides information on regional circuit modification through use of alternate schematic diagrams, and information on regional component variations through use of parts list.

KENWOOD CORPORATION
Shionogi Shibuya Building, 17-5, 2-chome Shibuya, Shibuya-ku, Tokyo 150, Japan

KENWOOD ELECTRONICS
1315 E. Watsoncenter Rd, Carson, California 90745;
75 Seaview Drive, Secaucus, New Jersey 07094, U.S.A.

KENWOOD ELECTRONICS CANADA INC.
P.O. Box 1075 959 Gana Court, Mississauga, Ontario, Canada L4T 4C2

KENWOOD ELECTRONICS BENELUX N.V.
Mechelsesteenweg 418 B-1930 Zaventem, Belgium

KENWOOD ELECTRONICS DEUTSCHLAND GMBH
Rembrücker-Str. 15, 6056 Heusenstamm, West Germany

TRIO-KENWOOD FRANCE S.A.
Hi-Fi·VIDEO·CAR Hi-Fi
13, Boulevard Ney, 75018 Paris, France

TRIO-KENWOOD U.K. LTD.
17 Bristol Road, The Metropolitan Centre, Greenford, Middx. UB6 8UP England

KENWOOD ELECTRONICS AUSTRALIA PTY. LTD.
4E Woodcock Place, Lane Cove, N.S.W. 2066, Australia

KENWOOD & LEE ELECTRONICS, LTD.
Wang Kee Building, 5th Floor, 34-37, Connaught Road, Central, Hong Kong