STEREO DOUBLE CASSETTE DECK

KX-55W

SERVICE MANUAL

KENWOOD

TRIO-KENWOOD CORPORATION

PRINTED IN JAPAN
B51-1974-00(B)2338

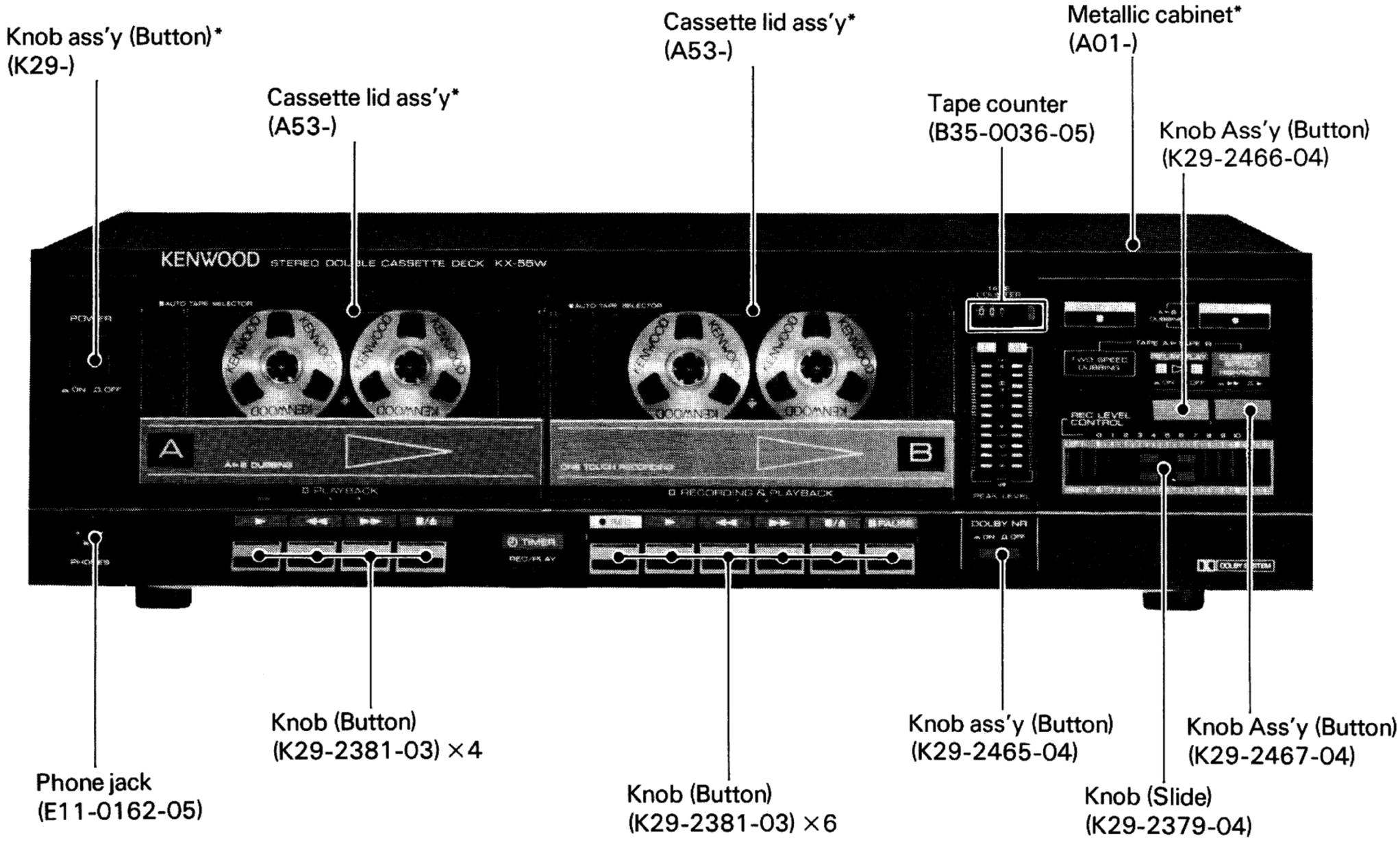

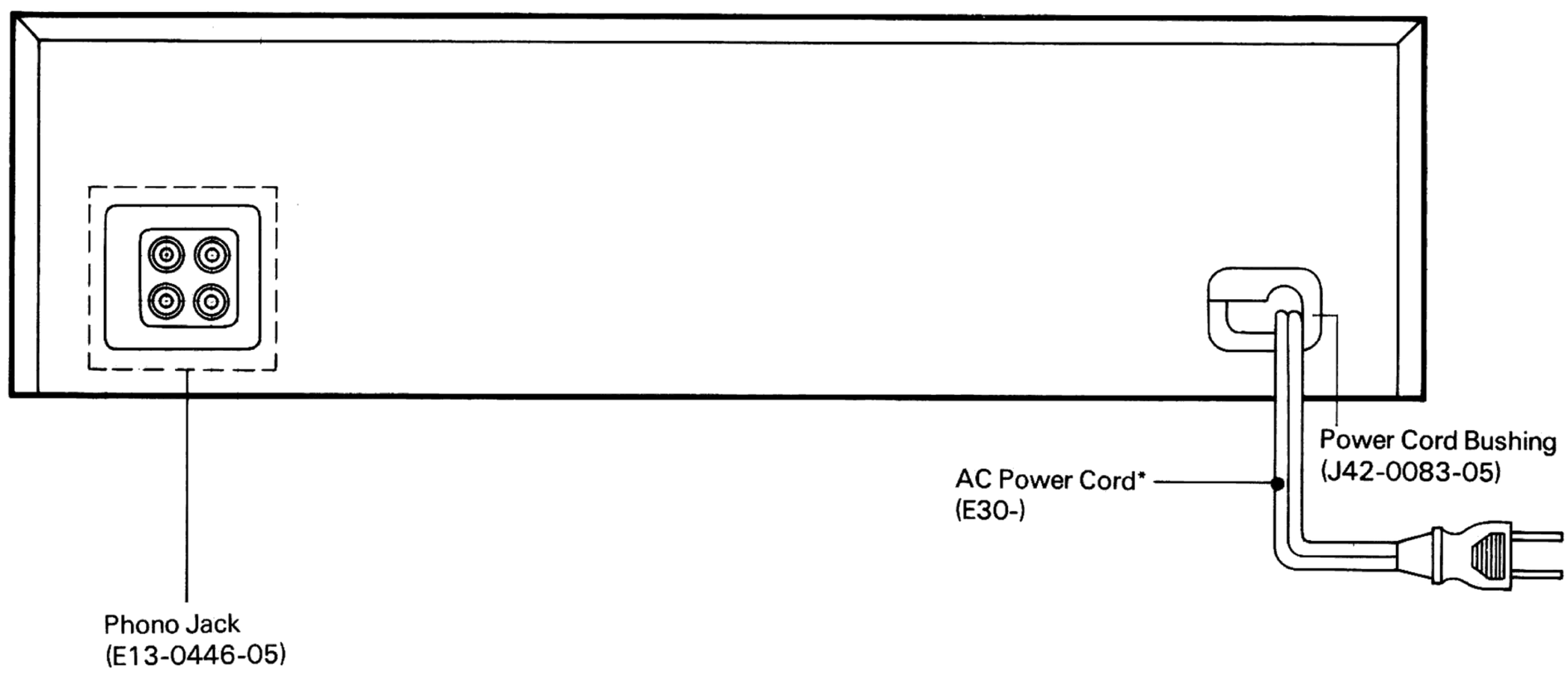

*** Refer to Parts List on page 8, 9.**
Photo is black version.

Operations of the mechanism of the KX-55W is basically the same as the KX-644W, KX-54 etc. except for minor differences. Whenever you perform service on it, refer to the manual.

www.hifiengine.com

DISASSEMBLY FOR REPAIR

1. Press the EJECT buttons for both the A and B mechanisms ❶ and detach the cassette lids in direction ❷.
2. Remove the six screws ❸ attached to the front panel and detach the panel in direction ❹.
3. Remove the two screws ❺ attached to the sub panels. Using a screwdriver, remove the knobs attached to (X28) (E/5) S1 and S2 in direction ❻. Remove the S1 knobs in direction ❼ and the S2 knobs in direction ❽.

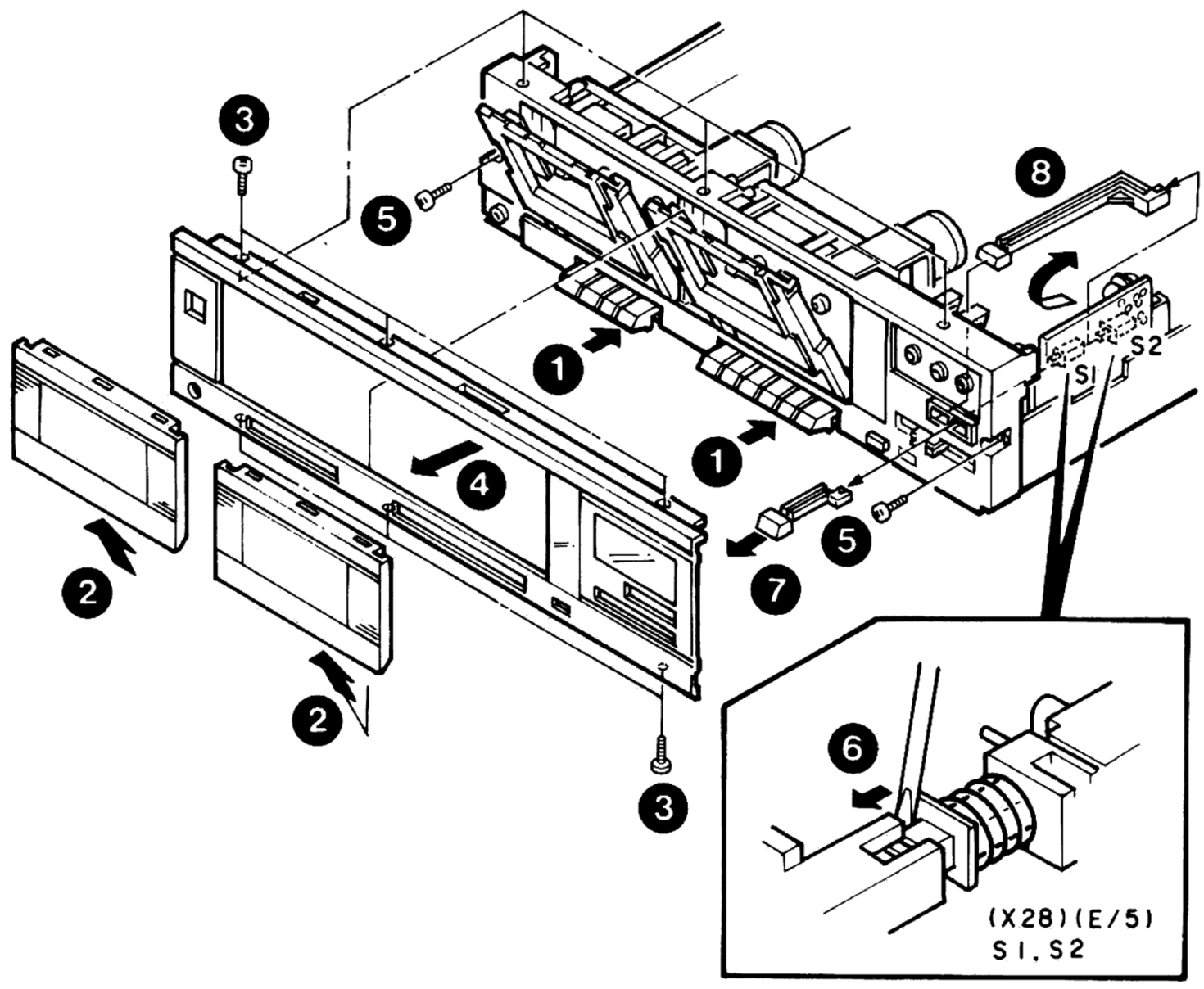

4. Lift the hook on the sub panels in direction ❾ and bring the sub panels out in direction ⓬.

* When attaching to ❿ and ⓫, they must be matched, or the sub panels cannot be attached.

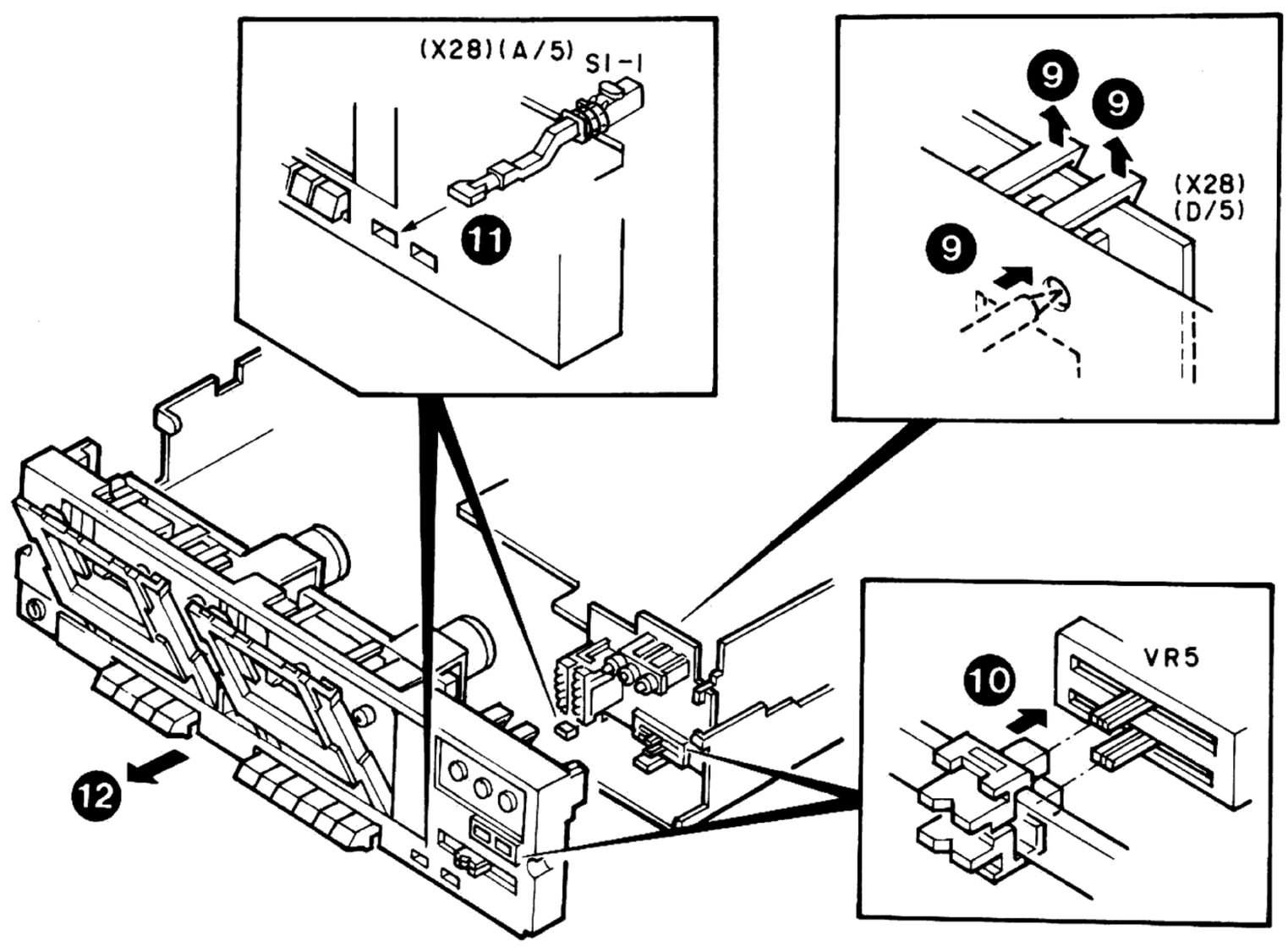

www.hifiengine.com

DISASSEMBLY FOR REPAIR

5. Remove the belt 13
   Remove the four screws 14 and remove the B mechanism.
   Remove the four screws 15 and remove the A mechanism.
6. Remove the mechanisms in direction 16, paying attention to the sub panels.

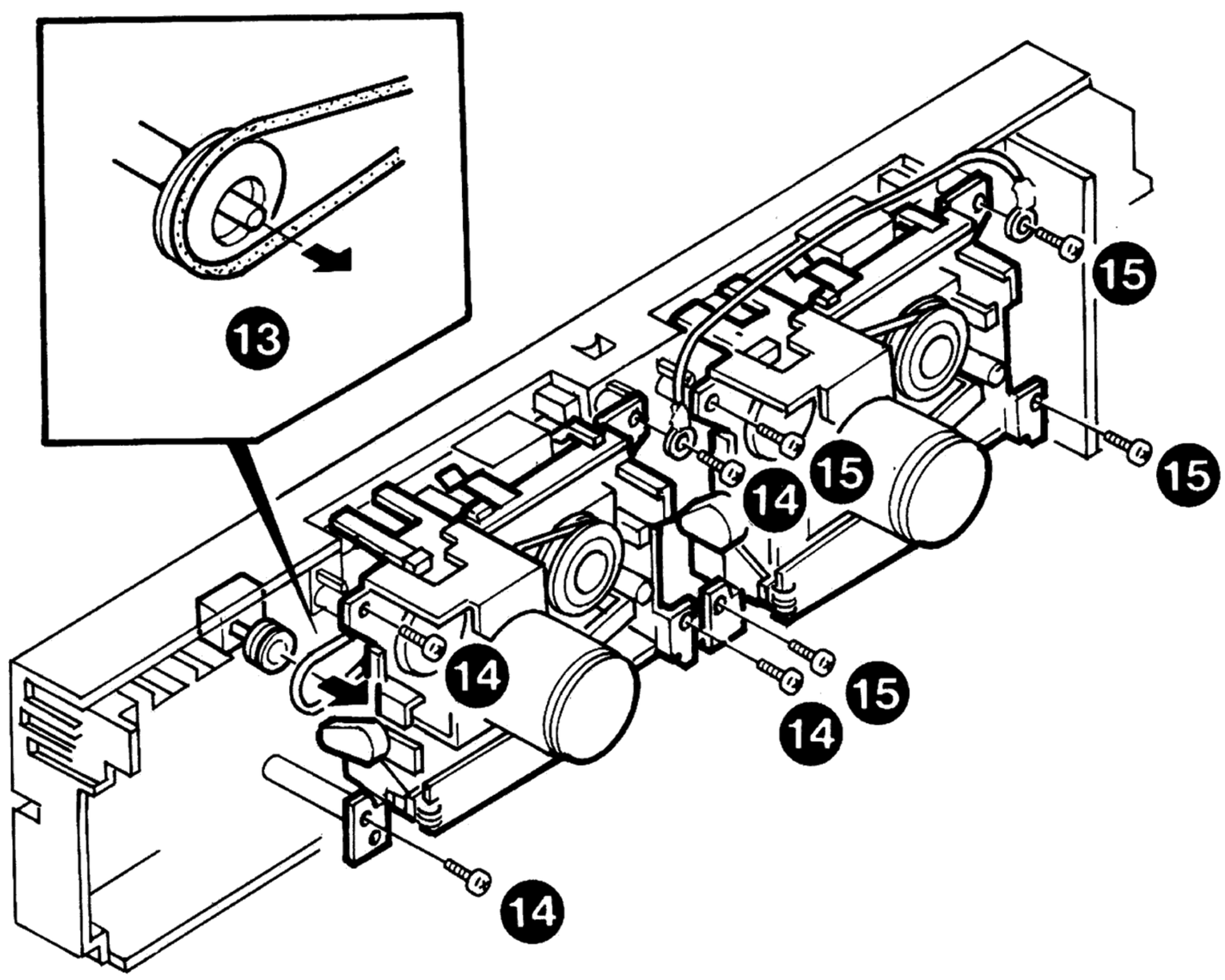

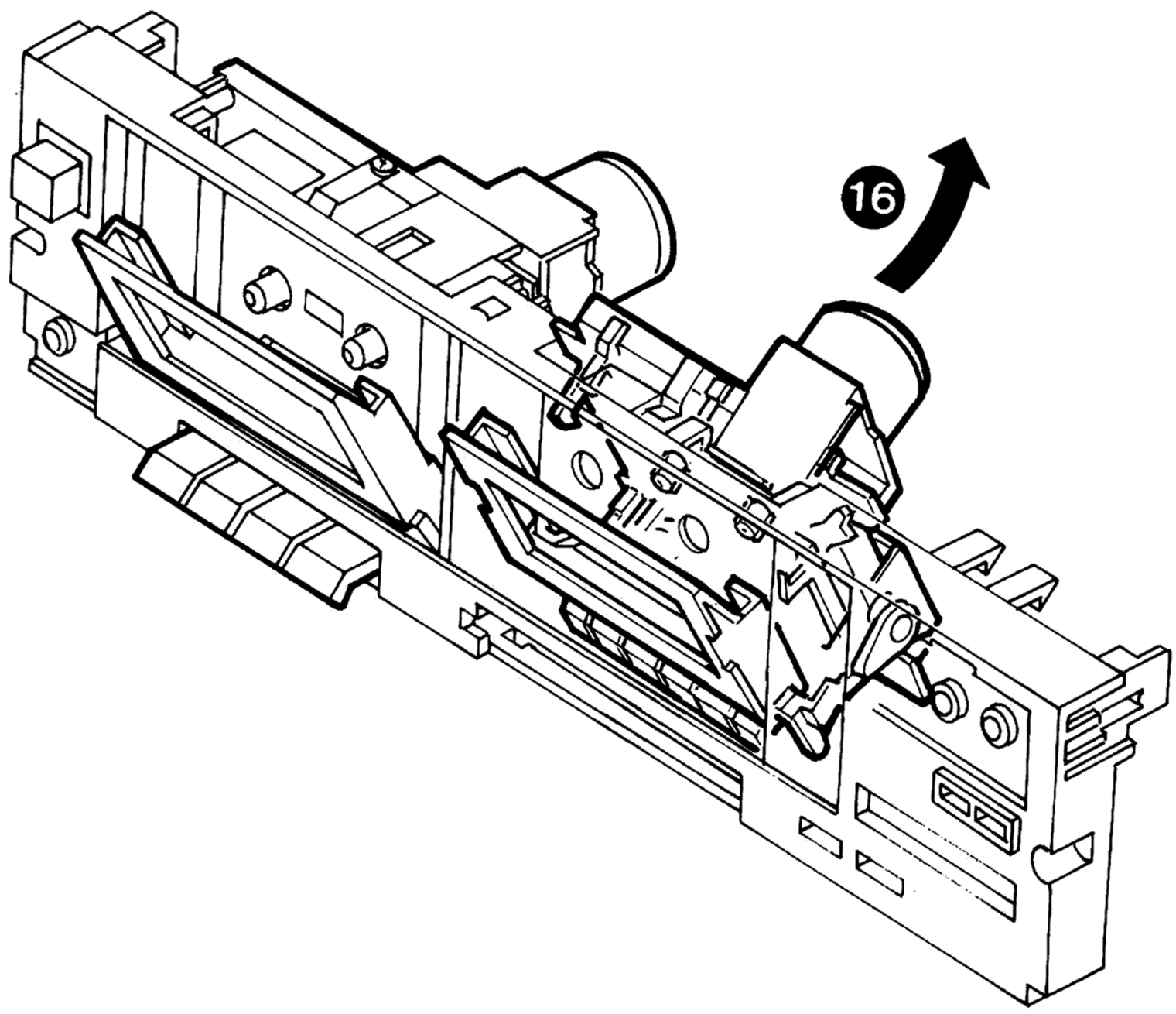

www.hifiengine.com

BLOCK LEVEL DIAGRAM

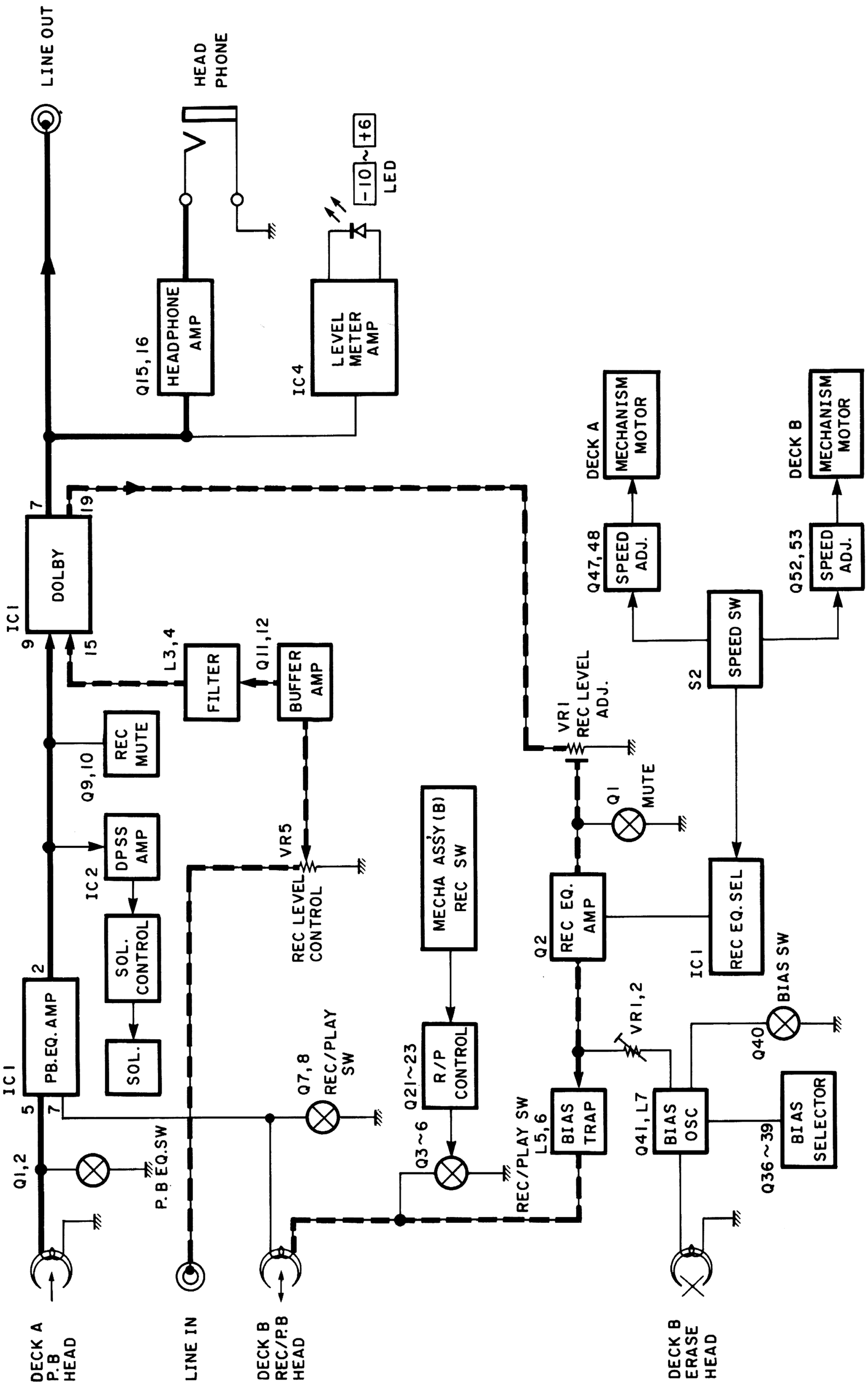

CIRCUIT DESCRIPTION

Function of Components

Recording/Playback Unit (X28-1770-)

Component	Use/Function	Operation/Conditions/Interchangeability
Q1, 2	Deck A playback EQ selection (SW)	NOR. SPEED: ON, HI SPEED: OFF
Q3～6	R/P selection (SW)	STOP/B PB: ON, REC/NOR. DUB/HI-DUB: OFF
Q7, 8	R/P selection (SW)	STOP/B PB: OFF, REC/NOR. DUB/HI-DUB: ON
Q9, 10	Rec mute (SW)	REC: ON
Q11, 12	Line buffer amp (Amp)	
Q13, 14	Line mute (SW)	STOP/DPSS: ON
Q15, 16	Phones amp (Amp)	
Q21	R/P control (SW)	REC/NOR. DUB/HI-DUB: ON, B PB: OFF
Q22	R/P control (SW)	REC/NOR. DUB/HI-DUB: OFF, B PB: ON
Q23	R/P control (SW)	REC/NOR. DUB/HI-DUB: OFF, B PB: ON
Q24	PB EQ control (SW)	ON except for A PB
Q25	A/B control (SW)	A PB: ON
Q26	Dub control (SW)	REC/DUB/HI-DUB: OFF, B PB: ON
Q27	Dub control (SW)	A PB: ON (except for REC)
Q28	Dolby B control (SW)	REC: ON, PB/NOR. DUB/HI-DUB: OFF
Q29	14 V regulation (Reg.)	
Q30	Dolby switch (SW)	NR OFF: ON, NR ON and NOR. DUB/HI-DUB: ON
Q31	NR LED control (SW)	NOR. DUB//HI-DUB: ON
Q34	Mute control (SW)	DPSS: ON, STOP: ON
Q35	Line mute drive (SW)	DPSS: ON, STOP: ON
Q36	Tape selector (SW)	DECK B METAL TAPE: ON
Q37	Bias selection (SW)	DECK B METAL TAPE: ON
Q38	Bias selection (SW)	DECK B CrO_2 TAPE: ON
Q39	Bias switch (SW)	REC/NOR. DUB/HI-DUB: ON
Q40	Bias switch (SW)	ON directly after power ON
Q41	Bias oscillation (OSC)	105 kHz
Q42	Power off detection (SW)	POWER ON: ON
Q43	Mute control (SW)	PB/REC/NOR. DUB/HI-DUB: ON
Q44	Mute control (SW)	PB/REC/NOR. DUB/HI-DUB: OFF
Q45	Mute control (SW)	REC: ON instantaneously
Q46	Mute drive (SW)	STOP: ON
Q47	A motor speed control (SW)	NOR. SPEED: ON
Q48	A motor speed control (SW)	NOR. SPEED: ON
Q49	DPSS solenoid control (SW)	A PB: ON
Q50	Voltage limiter (Reg.)	Limits voltage when increased power supply voltage
Q52	B motor speed control (SW)	NOR. SPEED: ON
Q53	B motor speed control (SW)	NOR. SPEED: ON
Q54	B motor speed control (SW)	RELAY PLAY SW OFF: OFF, RELAY PLAY SW ON and A PB: ON
Q55	B motor speed control (SW)	RELAY PLAY SW OFF: ON, RELAY PLAY SW ON and A PB: OFF
IC1	Rec EQ selection (4 Tr array)	During REC (including NOR. DUB) and HI-DUB, selects REC EQ for each type of tape
IC3	18 V regulated power supply	
IC4	Meter	5 ×2 points, −10, −6, 0, +3, +6 dB
IC5	Mute timing 4 ×EXOR	Instantaneously HI during REC, speed switching, A PB

www.hifiengine.com

ADJUSTMENT

No.	ITEM	INPUT SETTINGS	OUTPUT SETTINGS	CASSETTE TAPE DECK SETTINGS	ALIGNMENT POINTS	ALIGN FOR	FIG.
CASSETTE DECK SECTION		TAPE: NORMAL, DOLBY: OFF, INPUT: LINE				0dBs=0.775V	
I REC/PLAY HEAD							
[1]	DEMAGNETIZATION	–	–	POWER: OFF Remove the cassette door.	REC/PLAY head	Demagnetize the REC/PLAY head with a head demagnetizer.	
[2]	CLEANING	–	–	PLAY	REC/PLAY head erase head, capstan, pinch roller.	Clean the REC/PLAY head erase head, capstan and pinch roller using a cotton swab slightly damped with alcohol.	
[3]	AZIMUTH	MTT-114 10kHz, -10dB	(B)	PLAY	Azimuth adjustment screw	Minimum output	
II PC BOARD (X28-1770)							
(i)	TAPE SPEED (HI SPEED)	MTT-111 TCC-110 3kHz	(B)	Connect a jumper wire between GND and TPA(TPB). PLAY	(X28-1770-10) DECK A: VR4 DECK B: VR7	Adjust the tape speed so that a 6kHz signal is produced at the center of the tape.	(a)
(ii)	TAPE SPEED (NORMAL)	MTT-111 TCC-110 3kHz	(B)	PLAY	(X28-1770-10) DECK A: VR3 DECK B: VR6	Adjust the tape speed so that a 3kHz signal is produced at the center of the tape.	(b)
III PC BOARD (X28-1770,X87-1100,X87-1050)							
<1>	PLAYBACK LEVEL	(a) MTT-150 TCC-130 400Hz	(B)	PLAY	DECK A, DT 1: VR1(L) VR2(R) DECK B: VR3(L) VR4(R)	Output level: -6.0dBs	(c)
		(b) MTT-256 TCC-162 315Hz				Output level: -9.0dBs	
		(c) MTT-256U 315Hz				Output level: -5.0dBs	
<2>	BIAS CURRENT	(A) 1kHz, -30dBs 10kHz, -30dBs	(B)	Adjust VR5 so that the REC monitor output becomes -29dBs at 1kHz, then record and reproduce signal of 1kHz and 10kHz in alternation.	(X28-1770-10) VR1(L) VR2(R)	Record 1kHz and 10kHz in alternation and adjust the variable resistors which control the bias current so that the same playback level is obtained.	(d)
<3>	RECORD LEVEL	(A) 1kHz, -10dBs	(B)	Record and reproduce a 1kHz signal under the conditions set in <2>.	(X87-1050-02) VR1(L/R)	Adjust the variable resistors so that a playback level of -9dBs is obtained.	(e)

SYSTEM CONNECTIONS

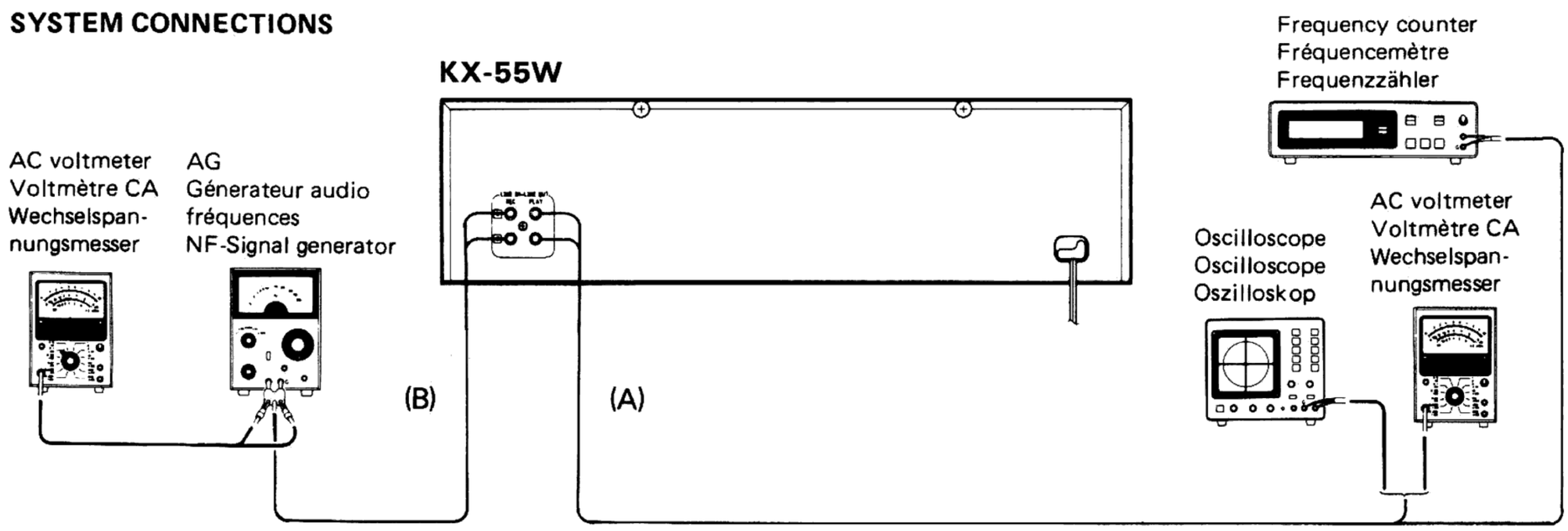

www.hifiengine.com

REGLAGE

N°	ITEM	REGLAGE DE L'ENTREE	REGLAGE DE LA SORTIE	REGLAGE DU MAGNETO-PHONE A CASSETTE	POINTS DE L'ALIGNEMENT	ALIGNER POUR	FIG.
SECTION DU MAGNETOPHONE		TAPE: NORMAL, DOLBY: OFF, ENTREE: LINE				0dBs=0,775V	
I TETE D'ENREGISTREMENT/LECTURE							
[1]	DEMAGNETISATION	—	—	POWER: OFF Eloigner la porte.	Tête D'ENREGISTREMENT/ LECTURE	Demagnetiser la tête D'ENREGISTREMENT/LECTURE avec un demagnetiseur de tete.	
[2]	NETTOYAGE	—	—	PLAY	Tête D'ENREGISTREMENT/ LECTURE tête d'effacement, cabestan, galetpresseur.	Nettoyer la tête D'ENREGISTREMENT/LECTURE la tete d'effacement, le cabestan et le galetpresseur avec un coton-tige légèrement imbibé d'alcool.	
[3]	AZIMUT	MTT-114 10kHz. -10dB	(B)	PLAY	Vis d'azimut	Sortie minimale	
II PLAQUE IMPRIMEE (X28-1770)							
(i)	VITESSE DE DEFILEMENT (HI SPEED)	MTT-111 TCC-110 3kHz	(B)	Connecter un cablage entre les GND et TPA(TPB). PLAY	(X28-1770-10) DECK A: VR4 DECK B: VR7	Régler la vitesse de bande de façon qu'un signal de 6kHz soit produit au centre de la bande.	(a)
(ii)	VITESSE DE DEFILEMENT (NORMAL)	MTT-111 TCC-110 3kHz	(B)	PLAY	(X28-1770-10) DECK A: VR3 DECK B: VR6	Régler la vitesse de bande de façon qu'un signal de 3kHz soit produit au centre de la bande.	(b)
III PLAQUE IMPRIMEE (X28-1770,X87-1100,X87-1050)							
<1>	NIVEAU DE LECTURE	(a) MTT-111 TCC-130 400Hz	(B)	PLAY	DECK A , DT 1: VR1(G) VR2(D)	Niveau de sortie: -6,0dBs	(c)
		(b) MTT-256 TCC-162 315Hz			DECK B: VR3(G) VR4(D)	Niveau de sortie: -9,0dBs	
		(c) MTT-256U 315Hz				Niveau de sortie: -5,0dBs	
<2>	COURANT DE POLARISATION	(A) 1kHz. -30dBs 10kHz. -30dBs	(B)	Régler VR5 de façon que la sortie de moniteur REC soit de -29dBs à 1kHz, puis en registrer et signaux de 1kHz et 10kHz en alternance.	(X28-1770-10) VR1(G) VR2(D)	Enregistrer un signal de 1kHz et 10kHz en alternance et ajuster les resistances variables qui commandent le courant de polarite de façon à obtenir le meme niveau de lecture.	(d)
<3>	NIVEAU D'ENREGISTREMENT	(A) 1kHz. -10dBs	(B)	Enregistrer et reproduire un signal de 1kHz dans les conditions précisées en <2>.	(X87-1050-02) VR1(G/D)	Ajuster les résistances variables de façon à obtenir un niveau de lecture de -9dBs.	(e)

www.hifiengine.com

ABGLEICH

NR.	GEGENSTAND	EINGANGS-EINSTELLUNG	AUSGANGS-EINSTELLUNG	KASSETTENGERÄT-EINSTELLUNG	ABGLEICH PUNKTE	ABGLEICHEN FÜR	ABB.
CASSETTEN-DECK-ABTEILUNG		TAPE: NORMAL, DOLBY: OFF, EINGANG: LINE				0dBs=0,775V	
I AUFNAHME/WIEDERGABE-KOPF							
[1]	ENTMAGNETI-SIERUNG	—	—	POWER: OFF Den Kassettenfach deckel oben herausziehen.	AUFNAHME/ WIEDERGABE-Kopf	Entmagnetisierung von dem AUFNAHME/WIEDERGABE-Kopf mit einem Tonkopf Entmagnetisierungsdrossel.	
[2]	REINIGUNG	—	—	PLAY	AUFNAHME/ WIEDERGABE-Kopf Löschkopf, Tonwelle, Andruckrolle.	AUFNAHME/WIEDERGABE-Kopf, Löschkopf, Tonwelle und Andruckrolle mit einem leicht mit Alkohol befeuch teten Wattebausch reinigen.	
[3]	AZIMUT-EINSTELLUNG	MTT-114 10kHz. -10dB	(B)	PLAY	Azimut-Einstellschraube	Minimal Ausgang	
II GEDRUCKTE SCHALTPLATTE (X28-1770)							
(i)	BANDGESCH-WINDIGKEIT (HI SPEED)	MTT-111 TCC-110 3kHz	(B)	Einen Schaltdraht zwischen GND und TPA(TPB) anschließen. RLAY	(X28-1770-10) DECK A: VR4 DECK B: VR7	Die Bandgeschwindigkeit so justieren, daß ein 6kHz Signal auf der Mitte des Bands erzeugt wird.	(a)
(ii)	BANDGESCH-WINDIGKEIT (NORMAL)	MTT-111 TCC-110 3kHz	(B)	PLAY	(X28-1770-10) DECK A: VR3 DECK B: VR6	Die Bandgeschwindigkeit so justieren, daß ein 3kHz Signal auf der Mitte des Bands erzeugt wird.	(b)
III GEDRUCKTE SCHALTPLATTE (X28-1770,X87-1100,X87-1050)							
<1>	WIEDERGABE-PEGEL	(a) MTT-150 TCC-130 400Hz (b) MTT-256 TCC-162 315Hz (c) MTT-256U 315Hz	(B)	PLAY	DECK A , DT 1: VR1(L) VR2(R) DECK B: VR3(L) VR4(R)	Ausgangspegel: -6,0dBs Ausgangspegel: -9,0dBs Ausgangspegel: -5,0dBs	(c)
<2>	LEERLAUFSTROM	(A) 1kHz. -30dBs 10kHz. -30dBs	(B)	VR5 so justieren, deß der REC Monitorausgang -29dBs bei 1kHz wird, und danach abwechselnd Signale von 1kHz und 10kHz aufnehmen und wiedergeben.	(X28-1770-10) VR1(L) VR2(R)	Signale von 1kHz und 10kHz abwechselnd aufnehmen und die Regelwiderstände, die den Vormagnetisierugsstrom regeln, so justieren, daß der gleiche Wiedergabepegel erzielt wird.	(d)
<3>	UFNAHMEPEGEL	(A) 1kHz. -10dBs	(B)	Ein 1kHz Signal unter den in Punkt <2> beschriebenen Bedingungen aufnehmen und reproduzieren.	(X87-1050-02) VR1(L/R)	Die Regelwiderstände so justieren, daß ein wiedergabepegel von -9dBs erzielt wird.	(e)

www.hifiengine.com

PC BOARD

X28-1770-12

IC 1

1	0 V
2	12.3V
3	0 V
4	12.3V
5	0 V
6	0 V
7	8.4V
8	0 V
9	0 V

IC 3

IN	30.5V
GND	–
OUT	18.0V

IC 4

1	0 V	10	2.7V
2	0 V	11	10.9V
3	0 V	12	12.5V
4	12.5V	13	10.9V
5	12.5V	14	12.5V
6	10.9V	15	12.5V
7	12.5V	16	0V
8	10.9V	17	0V
9	0V	18	2.1V

IC 5

1	18.0V	8	17.2V
2	18.0V	9	18.0V
3	0 V	10	0V
4	0V	11	0V
5	0V	12	0V
6	0V	13	0V
7	0V	14	18.0V

Q11

E	3.6V
B	4.2V
C	6.9V

Q12

E	3.6V
B	4.2V
C	6.9V

Q15

E	11.1V
B	11.8V
C	18.0V

Q16

E	11.1V
B	11.8V
C	18.0V

Q29

E	13.5V
B	–
C	18.0V

Q50

E	14.2V
B	14.9V
C	14.9V

X87-1100-02

IC 1

1	10.5V	9	2.9V
2	2.4V	10	–
3	A 0 V	11	2.9V
4	2.4V	12	2.9V
5	2.9V	13	2.9V
6	2.9V	14	2.4V
7	2.8V	15	120μ 0.2V
8	0V	16	2.4V

X87-1050-02

Q2

E	–
B	1.7V
C	–

X87-1120-00

IC 1

1	14.0V	15	6.9V
2	7.0V	16	6.8V
3	6.9V	17	6.9V
4	6.7V	18	7.1V
5	7.0V	19	7.1V
6	7.1V	20	7.0V
7	7.1V	21	OFF 3.4V
8	7.0V		ON 6.8V
9	6.8V	22	OFF 3.5V
10	6.9V		ON 6.9V
11	6.9V	23	PB 14.0V
12	6.9V		REC 0V
13	6.9V	24	0V
14	6.9V		

R/P AMP UNIT (X28-1770-12) Component Side View

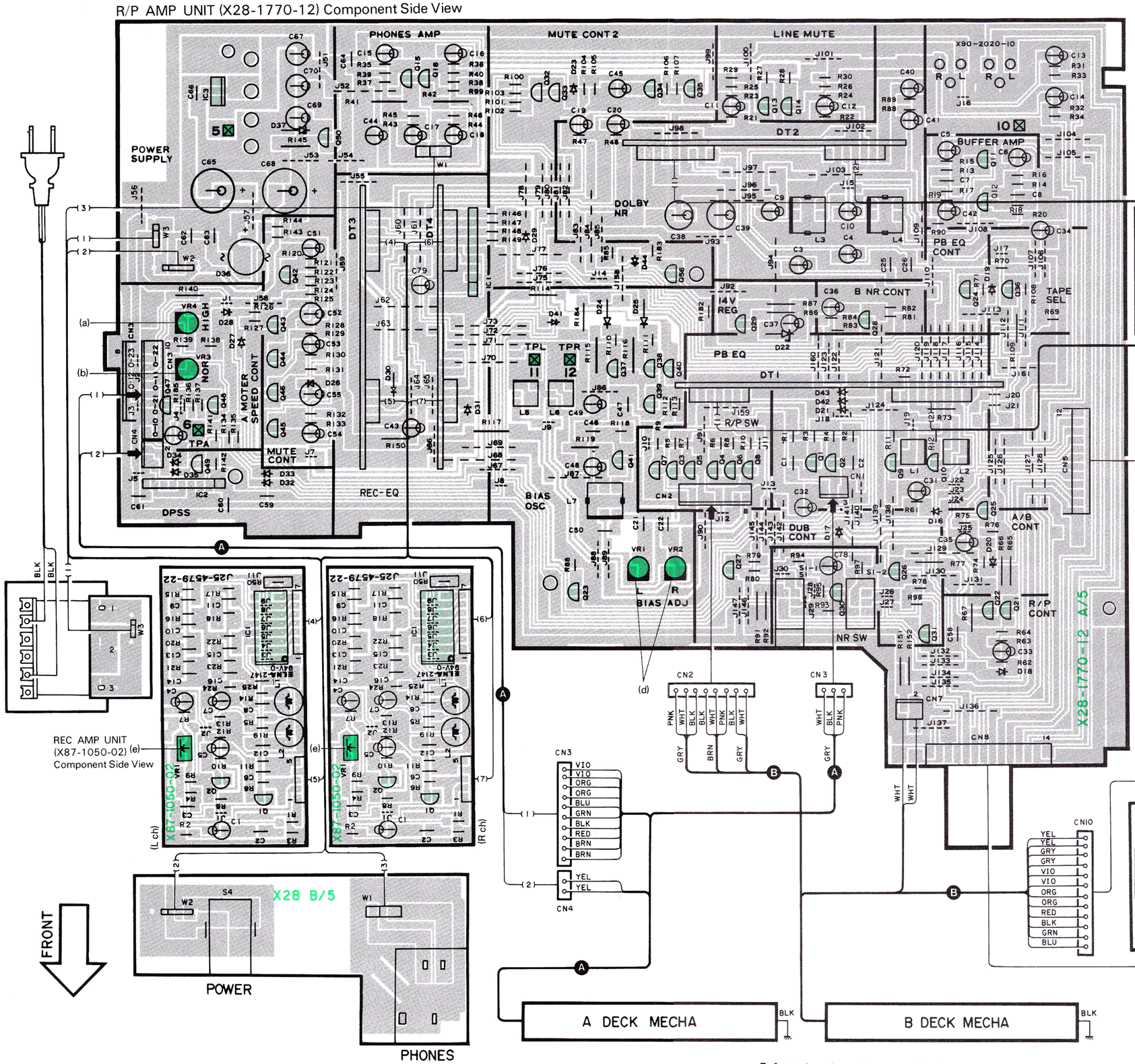

DOLBY NR UNIT (X87-1120-00)

Component Side View

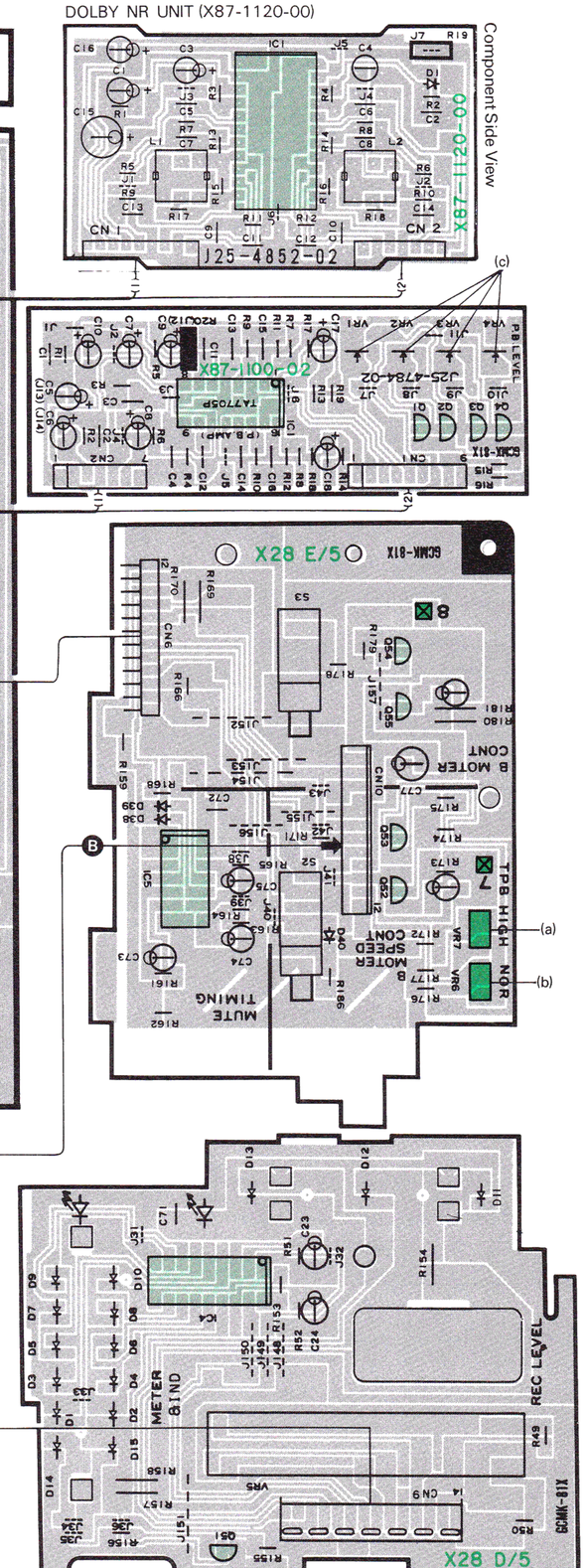

Refer to the schematic diagram for the values of resistors and capacitors.
The PC board drawing is viewed from the side easy to check.

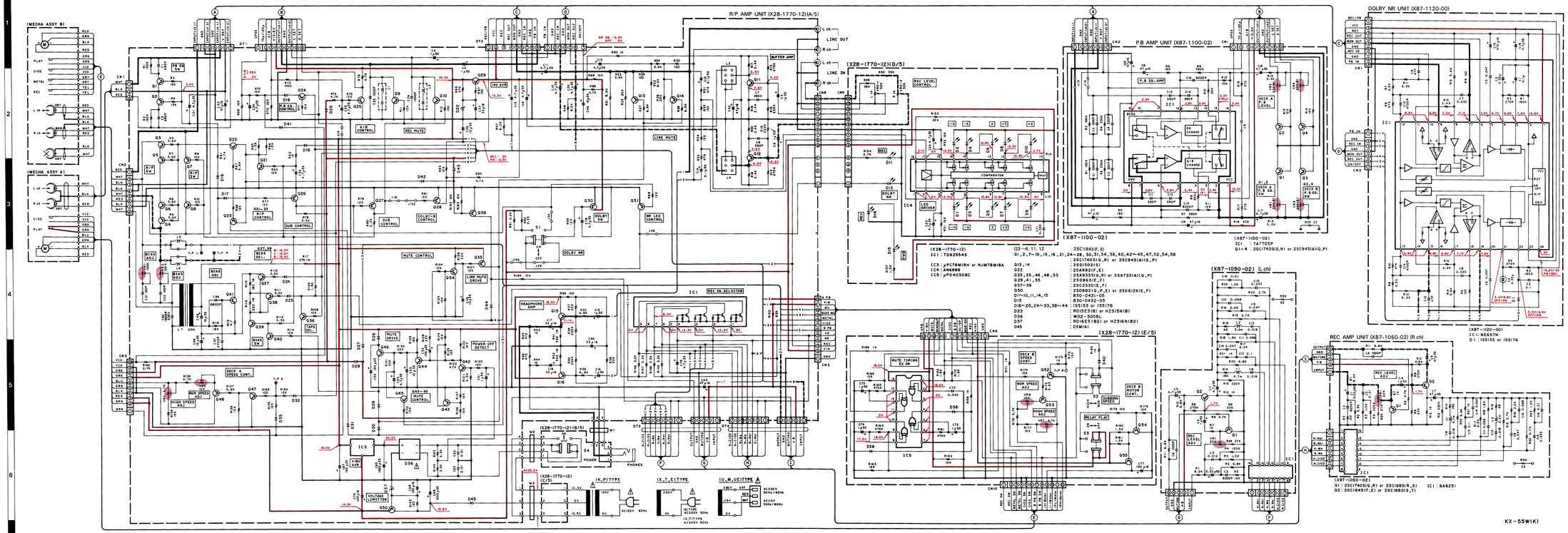

CAUTION: For continued safety, replace safety critical components only with manufacturer's recommended parts (refer to parts list). ⚠ indicates safety critical components. To reduce the risk of electric shock, leakage-current or resistance measurements shall be carried out (exposed parts are acceptably insulated from the supply circuit) before the appliance is returned to the customer.

DC voltages are as measured with a high impedance voltmeter with a cassette loaded at playback mode. Values may vary slightly due to variations between individual instruments or/and units. Bias circuit DC voltages are as measured while in the record mode.

Les tensions c.c. doivent être mesurées avec un voltmètre à haute impédance, une cassette étant insérée en mode du lecture. Les valeurs peuvent différer légèrement du fait des variations inhérentes aux appareils et aux instruments de mesure individuels.
Les tensions c.c. du circuit de polarité doivent être mesurées, l'appareil étant en mode d'enregistrement.

Die angegebenen Gleichspannungswerte wurden bei eingesetzter Cassette in der Wiedergabe mit einem hochohmigen Spannungsmesser gemessen. Dabei schwanken die Meßwerte aufgrund von Unterschieden zwischen einzelnen Instrumenten oder Geräten u. U. geringfügig. Die angegebenen Gleichspannungswerte der Vormagnetisierungsschaltung wurden in der Aufnahme-Betriebsart gemessen.

EXPLODED VIEW (MECHANISM UNIT)

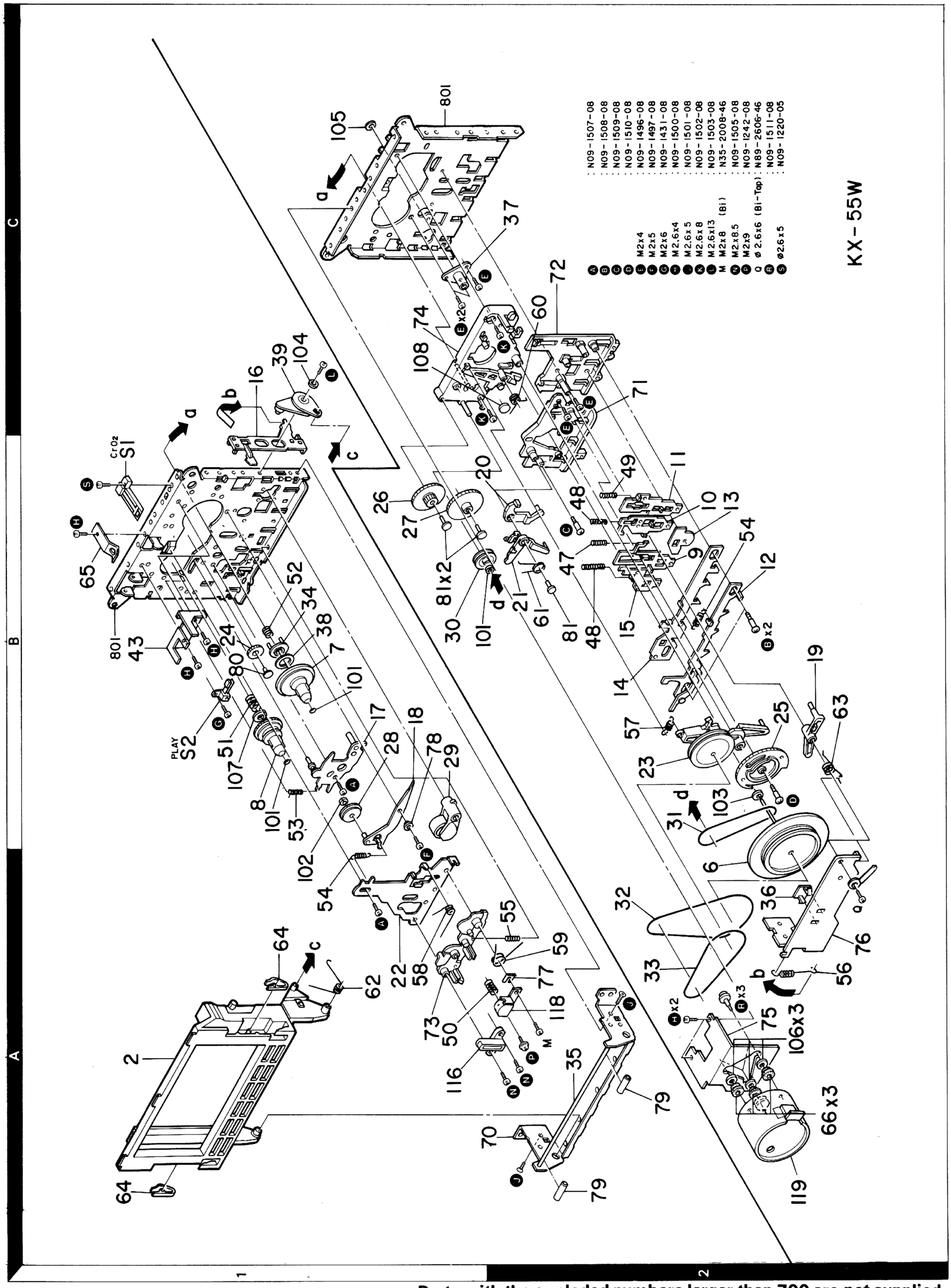

Parts with the exploded numbers larger than 700 are not supplied.

EXPLODED VIEW (MECHANISM UNIT)

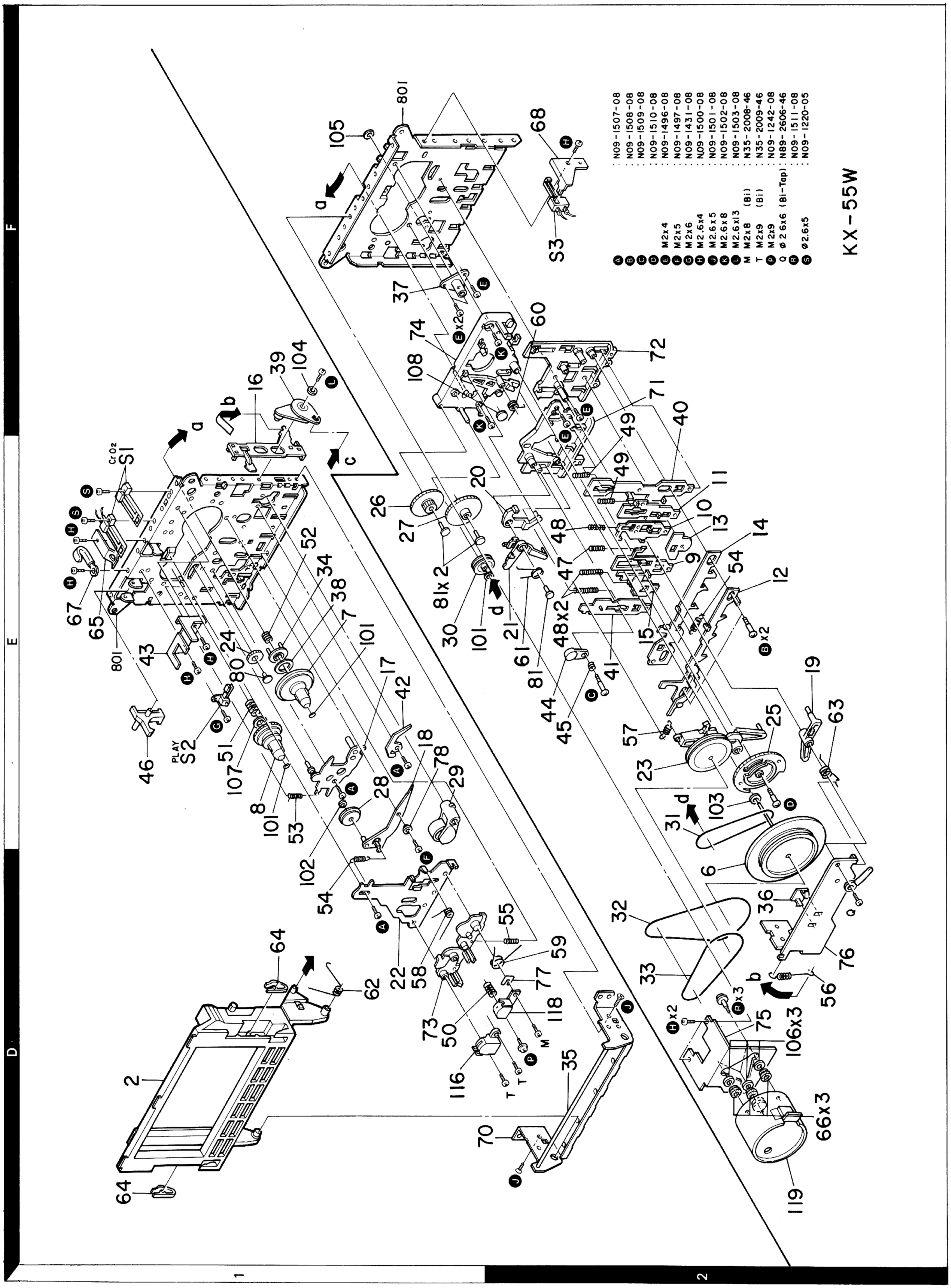

Parts with the exploded numbers larger than 700 are not supplied.

PARTS LIST

* New Parts
Parts without **Parts No.** are not supplied.
Les articles non mentionnes dans le **Parts No.** ne sont pas fournis.
Teile ohne **Parts No.** werden nicht geliefert.

Ref. No. 参照番号	Address 位置	New Parts 新	Parts No. 部品番号	Description 部品名／規格	Destination 仕向	Remarks 備考
			KX-55W			
301	1G		A01-1407-01	METALLIC CABINET	M2E2A2	S
301	1G		A01-1489-01	METALLIC CABINET	KP1U1	B
301	1G		A01-1489-01	METALLIC CABINET	M1UE1	B
301	1G		A01-1489-01	METALLIC CABINET	X1T1E1	B
301	1G		A01-1489-01	METALLIC CABINET	A1	B
303	2H	*	A20-4820-02	PANEL ASSY	KP1U1	B
303	2H	*	A20-4820-02	PANEL ASSY	M1UE1	B
303	2H	*	A20-4820-02	PANEL ASSY	X1E1A1	B
303	2H	*	A20-4821-02	PANEL ASSY	T1	B
303	2H	*	A20-4822-02	PANEL ASSY	M2E2A2	S
305	2H	*	A22-0564-02	SUB PANEL ASSY		
306	2G	*	A53-0817-03	CASSETTE LID ASSY(A)GRAY	KP1U1	B
306	2G	*	A53-0817-03	CASSETTE LID ASSY(A)GRAY	M1UE1	B
306	2G	*	A53-0817-03	CASSETTE LID ASSY(A)GRAY	X1A1	B
306	2G	*	A53-0819-03	CASSETTE LID ASSY(A)	M2E2A2	S
306	2G	*	A53-0821-03	CASSETTE LID ASSY(A)	T1E1	B
307	2G	*	A53-0826-03	CASSETTE LID ASSY(B)GRAY	KP1U1	B
307	2G	*	A53-0826-03	CASSETTE LID ASSY(B)GRAY	M1UE1	B
307	2G	*	A53-0826-03	CASSETTE LID ASSY(B)GRAY	X1A1	B
307	2G	*	A53-0828-03	CASSETTE LID ASSY(B)	M2E2A2	S
307	2G	*	A53-0830-03	CASSETTE LID ASSY(B)	T1E1	B
315	2H		B07-1459-04	ESCUTCHEON (SLIDE)		
316	2H		B35-0036-05	TAPE COUNTER		
-			B46-0092-03	WARRANTY CARD	K	
-			B46-0094-03	WARRANTY CARD	U1UE1	
-			B46-0095-03	WARRANTY CARD	U1UE1	
-			B46-0096-13	WARRANTY CARD	X1	
-			B46-0121-03	WARRANTY CARD	P1	
-			B46-0122-13	WARRANTY CARD	E1E2	
-			B46-0123-03	WARRANTY CARD	T1	
-		*	B50-6161-10	INSTRUCTION MANUAL(ENGLISH)	KP1U1	
-		*	B50-6161-10	INSTRUCTION MANUAL(ENGLISH)	M1UE1	
-		*	B50-6161-10	INSTRUCTION MANUAL(ENGLISH)	X1E1M2	
-		*	B50-6161-10	INSTRUCTION MANUAL(ENGLISH)	E2A1A2	
-		*	B50-6162-10	INSTRUCTION MANUAL(FRENCH)	P1M1X1	
-		*	B50-6162-10	INSTRUCTION MANUAL(FRENCH)	E1M2E2	
-		*	B50-6162-10	INSTRUCTION MANUAL(FRENCH)	A1A2	
-		*	B50-6163-10	INSTRUCTION MANUAL(SPANISH)	M1M2A1	
-		*	B50-6163-10	INSTRUCTION MANUAL(SPANISH)	A2	
-		*	B50-6164-10	INSTRUCTION MANUAL(ARABIC)	M1M2A1	
-		*	B50-6164-10	INSTRUCTION MANUAL(ARABIC)	A2	
-		*	B50-6165-10	INSTRUCTION MANUAL(ENGLISH)	T1	
-		*	B50-6166-10	INSTRUCTION MANUAL(G,D,I)	E1E2	
-			B58-0223-04	CAUTION CARD (PRE-SET 120V)	U1	
-			B58-0269-04	CAUTION CARD	K	
-			B58-0513-04	CAUTION CARD (PRESET220-240)	UE1	
-			B59-0092-00	SERVICE DIRECTORY	U1UE1	
320	2H		D16-0133-04	BELT		
324	1G		E03-0102-25	AC INLET	U1M1	
324	1G		E03-0102-25	AC INLET	UE1M2	
324	1G		E03-0102-25	AC INLET	A1A2	

E: Scandinavia & Europe **H**:Audio Club **K**: USA **P**: Canada **W**:Europe **S**:Silver Version
T: England **U**: PX(Far East, Hawaii) **B**:Black Version
UE : AAFES(Europe) **X**: Australia **M**: Other Areas ⚠ indicates safety critical components.

www.hifiengine.com

EXPLODED VIEW (MAIN UNIT)

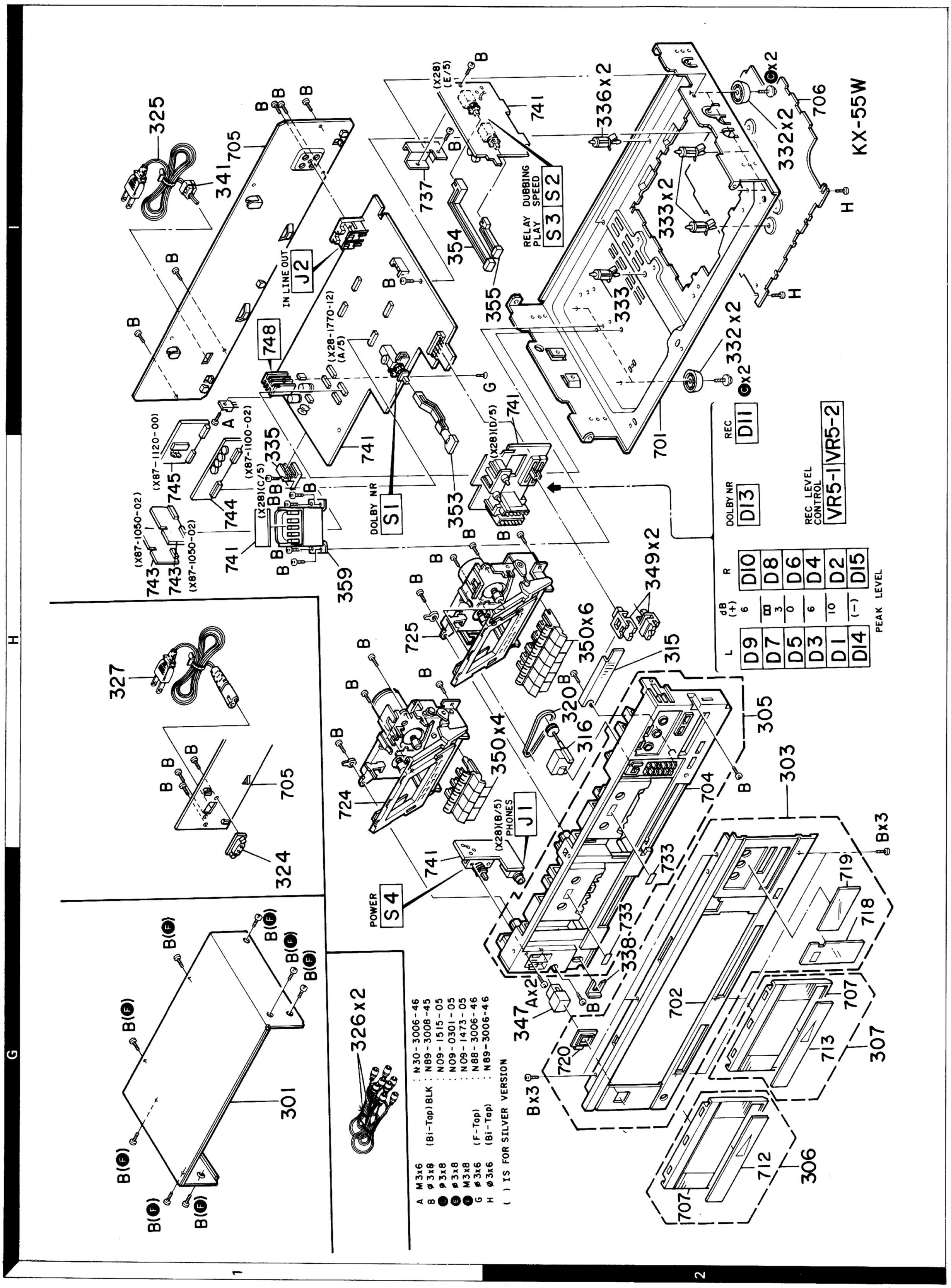

Parts with the exploded numbers larger than 700 are not supplied.

PARTS LIST

* New Parts
Parts without **Parts No.** are not supplied.
Les articles non mentionnes dans le **Parts No.** ne sont pas fournis.
Teile ohne **Parts No.** werden nicht geliefert.

Ref. No. 参照番号	Address 位置	New Parts 新	Parts No. 部品番号	Description 部品名／規格	Destination 仕向	Remarks 備考
325	1I		E30-0181-05	AC POWER CORD	KP1	
325	1I		E30-0459-05	AC POWER CORD	E1E2	
325	1I		E30-1341-05	AC POWER CORD	X1	
325	1I		E30-1416-05	AC POWER CORD	T1	
326	1G		E30-0505-05	AUDIO CORD		
327	1H		E30-1305-15	AC POWER CORD (INLET)	U1M1	
327	1H		E30-1305-15	AC POWER CORD (INLET)	UE1M2	
327	1H		E30-1329-05	AC POWER CORD (INLET)	A1A2	
-		*	H01-7117-04	ITEM CARTON CASE	KP1U1	B
-		*	H01-7117-04	ITEM CARTON CASE	M1UE1	B
-		*	H01-7117-04	ITEM CARTON CASE	X1E1A1	B
-		*	H01-7118-04	ITEM CARTON CASE	T1	B
-		*	H01-7255-04	ITEM CARTON CASE	M2E2A2	S
-			H10-1879-02	POLYSTYRENE FOAMED FIXTURE(L)		
-			H10-1880-02	POLYSTYRENE FOAMED FIXTURE(R)		
-		*	H11-0004-04	POLYSTYRENE FOAMED BOARD		
-			H20-0417-04	PROTECTION COVER(460X370X360)	M1M2A1	
-			H20-0417-04	PROTECTION COVER(460X370X360)	A2	
-			H25-0223-04	PROTECTION BAG (750X350)	KP1U1	
-			H25-0223-04	PROTECTION BAG (750X350)	UE1X1	
-			H25-0223-04	PROTECTION BAG (750X350)	T1E1E2	
-			H25-0232-04	PROTECTION BAG (235X350)		
332	2I		J02-0170-04	FOOT		
333	2I		J19-0508-05	UNIT HOLDER		
335	1H		J19-2535-04	UNIT HOLDER (RED)	P1U1M1	
335	1H		J19-2535-04	UNIT HOLDER (RED)	UE1X1	
335	1H		J19-2535-04	UNIT HOLDER (RED)	T1E1M2	
335	1H		J19-2535-04	UNIT HOLDER (RED)	E2A1A2	
335	1H		J19-2539-04	UNIT HOLDER (WHITE)	K	
336	2I		J19-2536-05	UNIT HOLDER		
338	2G		J21-3326-05	JACK MOUNTING HARDWARE(PHONES)		
341	1I		J42-0083-05	POWER CORD BUSHING	KP1X1	
341	1I		J42-0083-05	POWER CORD BUSHING	T1E1E2	
-			J61-0307-05	WIRE BAND		
347	2G		K29-1446-04	KNOB ASSY(BUTTON)POWER	M2E2A2	S
347	2G		K29-2001-04	KNOB ASSY(BUTTON)POWER	KP1U1	B
347	2G		K29-2001-04	KNOB ASSY(BUTTON)POWER	M1UE1	B
347	2G		K29-2001-04	KNOB ASSY(BUTTON)POWER	X1T1E1	B
347	2G		K29-2001-04	KNOB ASSY(BUTTON)POWER	A1	B
349	2H		K29-2379-04	KNOB (SLIDE) REC LEVEL CONTROL		
350	2H		K29-2381-03	KNOB (BUTTON)		
353	1H		K29-2465-04	KNOB ASSY(BUTTON)DOLBY NR		
354	1I		K29-2466-04	KNOB ASSY(BUTTON)RELAY PLAY		
355	2I		K29-2467-04	KNOB ASSY(BUTTON)DUBBING SPEED		
359	1H		L01-7251-05	POWER TRANSFORMER	KP1	
359	1H		L01-7252-05	POWER TRANSFORMER	X1T1E1	
359	1H		L01-7252-05	POWER TRANSFORMER	E2	
359	1H		L01-7254-15	POWER TRANSFORMER	U1M1	
359	1H		L01-7254-15	POWER TRANSFORMER	UE1M2	
359	1H		L01-7254-15	POWER TRANSFORMER	A1A2	
C	2I		N09-1515-05	TAPPING SCREW (Ø3X8)		
F	1G		N09-1473-05	TAPPING SCREW (M3X8)	M2E2A2	

E: Scandinavia & Europe **H**:Audio Club **K**: USA **P**: Canada **W**:Europe **S**:Silver Version
T: England **U**: PX(Far East, Hawaii) **B**:Black Version
UE : AAFES(Europe) **X**: Australia **M**: Other Areas ⚠ indicates safety critical components.

www.hifiengine.com

PARTS LIST

⁎ New Parts
Parts without **Parts No.** are not supplied.
Les articles non mentionnes dans le **Parts No.** ne sont pas fournis.
Telle ohne **Parts No.** werden nicht geliefert.

Ref. No. 参照番号	Address 位置	New Parts 新	Parts No. 部品番号	Description 部品名／規格	Destination 仕向	Remarks 備考
RECORD/PLAYBACK UNIT (X28-1770-12)						
D1 -11	2H		B30-0431-05	LED(LN21CPH) PEAK LEVEL		
D13	2H		B30-0432-05	LED(LN31GCPH(U))DOLBY NR		
D14 ,15	2H		B30-0431-05	LED(LN21CPH)		
C1 ,2			CK45FB1H681K	CERAMIC 680PF K		
C3 -6			CE04KW1H010M	ELECTRO 1.0UF 50WV		
C7 ,8			CK45FB1H391K	CERAMIC 390PF K		
C9 -12			CE04KW1V4R7M	ELECTRO 4.7UF 35WV		
C13 ,14			CE04KW1H0R1M	ELECTRO 0.1UF 50WV		
C15 ,16			CE04KW1H010M	ELECTRO 1.0UF 50WV		
C17 ,18			CE04KW1C330M	ELECTRO 33UF 16WV		
C19 ,20			CE04KW1V4R7M	ELECTRO 4.7UF 35WV		
C21 ,22			CC45FSL1H101J	CERAMIC 100PF J		
C23 ,24			CE04KW1V4R7M	ELECTRO 4.7UF 35WV		
C25 ,26			CK45FB1H102K	CERAMIC 1000PF K		
C31			CE04KW1V4R7M	ELECTRO 4.7UF 35WV		
C32			CE04KW1A470M	ELECTRO 47UF 10WV		
C33 -35			CE04KW1V4R7M	ELECTRO 4.7UF 35WV		
C36			CE04KW1V100M	ELECTRO 10UF 35WV		
C37			CE04KW1C330M	ELECTRO 33UF 16WV		
C40			CE04KW1V100M	ELECTRO 10UF 35WV		
C42 ,43			CE04KW1C470M	ELECTRO 47UF 16WV		
C44			CE04KW1C330M	ELECTRO 33UF 16WV		
C45			CE04KW1V100M	ELECTRO 10UF 35WV		
C46			CF92FV1H682J	MF 6800PF J		
C47			CF92FV1H472J	MF 4700PF J		
C48 ,49			CE04KW1V100M	ELECTRO 10UF 35WV		
C50			C91-0773-05	POLYPRO 1000PF J		
C51			CE04KW1H010M	ELECTRO 1.0UF 50WV		
C52			CE04KW1E101M	ELECTRO 100UF 25WV		
C53			CE04KW1V100M	ELECTRO 10UF 35WV		
C54			CE04KW1V4R7M	ELECTRO 4.7UF 35WV		
C55			CE04KW1E101M	ELECTRO 100UF 25WV		
C62 ,63			CK45FF1H103Z	CERAMIC 0.010UF Z		
C65			CE04KW1V102M	ELECTRO 1000UF 35WV		
C67			CE04KW1E101M	ELECTRO 100UF 25WV		
C68		*	CE04KW1E102M*	ELECTRO 1000UF 25WV		
C69 ,70			CE04KW1C101M	ELECTRO 100UF 16WV		
C71 ,72			CK45FF1H223Z	CERAMIC 0.022UF Z		
C73 -75			CE04KW1H010M	ELECTRO 1.0UF 50WV		
C77			CE04KW1C101M	ELECTRO 100UF 16WV		
C78 ,79			CE04KW1V4R7M	ELECTRO 4.7UF 35WV		
J1	2H		E11-0162-05	PHONE JACK (3P)		
J2	1I		E13-0446-05	PHONO JACK (4P)LINE OUT/IN		
L1 ,2			L39-0126-05	TRAP COIL		
L3 ,4			L79-0720-05	LC FILTER		
L5 ,6			L39-0126-05	TRAP COIL		
L7			L32-0324-05	OSCILATING COIL		
R41 ,42			RS14KB3A561J	FL-PROOF RS 560 J 1W		
R115			RS14KB3A181J	FL-PROOF RS 180 J 1W		
R116			RS14KB3A221J	FL-PROOF RS 220 J 1W		
R117			RS14KB3A560J	FL-PROOF RS 56 J 1W		
R119			RD14GB2E4R7J	FL-PROOF RD 4.7 J 1/4W		

E: Scandinavia & Europe **H**:Audio Club **K**: USA **P**: Canada **W**:Europe
T: England **U**: PX(Far East, Hawaii)
UE : AAFES(Europe) **X**: Australia **M**: Other Areas

⚠ indicates safety critical components.

www.hifiengine.com

PARTS LIST

⁎ New Parts
Parts without **Parts No.** are not supplied.
Les articles non mentionnes dans le **Parts No.** ne sont pas fournis.
Teile ohne **Parts No.** werden nicht geliefert.

Ref. No. 参照番号	Address 位置	New Parts 新	Parts No. 部品番号	Description 部品名／規格	Destination 仕向	Remarks 備考
R145			RD14GB2E121J	FL-PROOF RD 120 J 1/4W		
VR1 ,2			R12-5047-05	TRIMMING POT.(220K)BIAS ADJ		
VR3			R12-3096-05	TRIMMING POT.(10K) NOR SPEED		
VR4			R12-1069-05	TRIMMING POT.(4.7K)HIGH SPEED		
VR5	2H		R13-4036-05	POTENTIOMETER(50K)REC LVL CONT		
VR6			R12-3100-05	TRIMMING POT.(10K) NOR SPEED		
VR7			R12-1073-05	TRIMMING POT.(4.7K)HIGH SPEED		
S1 -3	1H,2I		S40-2193-05	PUSH SWITCH(DOLBY,RELAY,SPEED)		
S4	1G		S40-2182-15	PUSH SWITCH(POWER)		
D16 -20			1SS133	DIODE		
D16 -20			1SS176	DIODE		
D22			HZS15N(B)	ZENER DIODE		
D22			RD15ES(B)	ZENER DIODE		
D24 -33			1SS133	DIODE		
D24 -33			1SS176	DIODE		
D36			W02-5008L	DIODE		
D37			HZS16N(B2)	ZENER DIODE		
D37			RD16ES(B2)	ZENER DIODE		
D38 -44			1SS133	DIODE		
D38 -44			1SS176	DIODE		
D45			DSM1A1	DIODE		
IC1			TD62554S	IC(4CH TRANSISTOR ARRAY)		
IC3			NJM78M18A	IC(VOLTAGE REGULATOR/ +18V)		
IC3			UPC78M18H	IC(VOLTAGE REGULATOR/ +18V)		
IC4			AN6888	IC(5PT LED LEVEL METER DR X2)		
IC5			UPD4030BC	IC(EXCLUSIVE OR X4)		
Q1 ,2			2SC1740S(Q,R)	TRANSISTOR		
Q1 ,2			2SC945(A)(Q,P)	TRANSISTOR		
Q3 -6			2SC1845(F,E)	TRANSISTOR		
Q7 -10			2SC1740S(Q,R)	TRANSISTOR		
Q7 -10			2SC945(A)(Q,P)	TRANSISTOR		
Q11 ,12			2SC1845(F,E)	TRANSISTOR		
Q13 ,14			2SD1302(S)	TRANSISTOR		
Q15 ,16			2SC1740S(Q,R)	TRANSISTOR		
Q15 ,16			2SC945(A)(Q,P)	TRANSISTOR		
Q21			2SC1740S(Q,R)	TRANSISTOR		
Q21			2SC945(A)(Q,P)	TRANSISTOR		
Q22			2SA992(F,E)	TRANSISTOR		
Q23			2SA733(A)(Q,P)	TRANSISTOR		
Q23			2SA933S(Q,R)	TRANSISTOR		
Q24 -28			2SC1740S(Q,R)	TRANSISTOR		
Q24 -28			2SC945(A)(Q,P)	TRANSISTOR		
Q29			2SD863(E,F)	TRANSISTOR		
Q30 ,31			2SC1740S(Q,R)	TRANSISTOR		
Q30 ,31			2SC945(A)(Q,P)	TRANSISTOR		
Q34			2SC1740S(Q,R)	TRANSISTOR		
Q34			2SC945(A)(Q,P)	TRANSISTOR		
Q35			2SA733(A)(Q,P)	TRANSISTOR		
Q35			2SA933S(Q,R)	TRANSISTOR		
Q36			2SC1740S(Q,R)	TRANSISTOR		
Q36			2SC945(A)(Q,P)	TRANSISTOR		
Q37 -39			2SC2320(E,F)	TRANSISTOR		
Q40			2SC1740S(Q,R)	TRANSISTOR		
Q40			2SC945(A)(Q,P)	TRANSISTOR		

E: Scandinavia & Europe **H**:Audio Club **K**: USA **P**: Canada **W**:Europe
T: England **U**: PX(Far East, Hawaii)
UE : AAFES(Europe) **X**: Australia **M**: Other Areas

⚠ indicates safety critical components.

www.hifiengine.com

PARTS LIST

⁎ New Parts
Parts without **Parts No.** are not supplied.
Les articles non mentionnes dans le **Parts No.** ne sont pas fournis.
Teile ohne **Parts No.** werden nicht geliefert.

Ref. No. 参照番号	Address 位置	New Parts 新	Parts No. 部品番号	Description 部品名／規格	Destination 仕向	Remarks 備考
Q41			2SD863(E,F)	TRANSISTOR		
Q42 -45			2SC1740S(Q,R)	TRANSISTOR		
Q42 -45			2SC945(A)(Q,P)	TRANSISTOR		
Q46			2SA733(A)(Q,P)	TRANSISTOR		
Q46			2SA933S(Q,R)	TRANSISTOR		
Q47			2SC1740S(Q,R)	TRANSISTOR		
Q47			2SC945(A)(Q,P)	TRANSISTOR		
Q48			2SA733(A)(Q,P)	TRANSISTOR		
Q48			2SA933S(Q,R)	TRANSISTOR		
Q50			2SD612K(E,F)	TRANSISTOR		
Q50			2SD882(Q,P,E)	TRANSISTOR		
Q52			2SC1740S(Q,R)	TRANSISTOR		
Q52			2SC945(A)(Q,P)	TRANSISTOR		
Q53			2SA733(A)(Q,P)	TRANSISTOR		
Q53			2SA933S(Q,R)	TRANSISTOR		
Q54			2SC1740S(Q,R)	TRANSISTOR		
Q54			2SC945(A)(Q,P)	TRANSISTOR		
Q55			2SD863(E,F)	TRANSISTOR		
Q56			2SC1740S(Q,R)	TRANSISTOR		
Q56			2SC945(A)(Q,P)	TRANSISTOR		
RECORD AMP UNIT (X87-1050-02)						
C1			CE04FW1HR22M	ELECTRO 0.22UF 50WV		
C2			CF92FV1H822J	MF 8200PF J		
C3			CF92FV1H183J	MF 0.018UF J		
C4			CE04FW1H010M	ELECTRO 1.0UF 50WV		
C5			CE04FW1V4R7M	ELECTRO 4.7UF 35WV		
C6			CF92FV1H102J	MF 1000PF J		
C7			CE04FW1V4R7M	ELECTRO 4.7UF 35WV		
C8			CF92FV1H183J	MF 0.018UF J		
C9			CF92FV1H473J	MF 0.047UF J		
C10			CF92FV1H683J	MF 0.068UF J		
C11			CF92FV1H563J	MF 0.056UF J		
C12			CF92FV1H183J	MF 0.018UF J		
C13			CF92FV1H104J	MF 0.10UF J		
C14			CF92FV1H473J	MF 0.047UF J		
C15			CF92FV1H333J	MF 0.033UF J		
C16			CF92FV1H103J	MF 0.010UF J		
L1			L40-4725-29	SMALL FIXED INDUCTOR(4.7MH,J)		
L2			L40-2225-29	SMALL FIXED INDUCTOR(2.2MH,J)		
VR1			R12-3101-05	TRIMMING POT.(22K) REC LEVEL		
IC1			BA6251	IC(7CH TRANSISTOR ARRAY)		
Q1			2SC1685(R,S)	TRANSISTOR		
Q1			2SC1740S(Q,R)	TRANSISTOR		
Q2			2SC1845(F,E)	TRANSISTOR		
Q2			2SC1980(S,T)	TRANSISTOR		
PLAYBACK AMP UNIT (X87-1100-02)						
C1 ,2			CK45FB1H102K	CERAMIC 1000PF K		
C3 ,4			CC45FSL1H221J	CERAMIC 220PF J		
C7 ,8			CE04KW1A470M	ELECTRO 47UF 10WV		
C9			CE04KW1C470M	ELECTRO 47UF 16WV		
C10			CE04KW1A470M	ELECTRO 47UF 10WV		
C11 -14			CK45FB1H391K	CERAMIC 390PF K		
C15 ,16			CF92FV1H822J	MF 8200PF J		

E: Scandinavia & Europe **H**:Audio Club **K**: USA **P**: Canada **W**:Europe
T: England **U**: PX(Far East, Hawaii)
UE : AAFES(Europe) **X**: Australia **M**: Other Areas

⚠ indicates safety critical components.

www.hifiengine.com

PARTS LIST

⁎ New Parts
Parts without **Parts No.** are not supplied.
Les articles non mentionnes dans le **Parts No.** ne sont pas fournis.
Telle ohne **Parts No.** werden nicht geliefert.

Ref. No. 参照番号	Address 位置	New Parts 新	Parts No. 部品番号	Description 部品名／規格	Destination 仕向	Remarks 備考
C17 ,18			CE04KW1V4R7M	ELECTRO 4.7UF 35WV		
VR1 -4			R12-3101-05	TRIMMING POT.(22K)PB LEVEL		
IC1			TA7705P	IC(PB EQ AMP/FWD REV SWITCH)		
Q1 -4			2SC1740S(Q,R)	TRANSISTOR		
Q1 -4			2SC945(A)(Q,P)	TRANSISTOR		
DOLBY NR UNIT (X87-1120-00)						
C1			CE04KW1H0R1M	ELECTRO 0.1UF 50WV		
C2			CF92FV1H104J	MF 0.10UF J		
C3			CE04KW1HR33M	ELECTRO 0.33UF 50WV		
C4		*	C90-1398-05	ALMINIUM ELECTROLYTIC C.		
C5 ,6			C91-0692-05	CERAMIC 0.047UF K		
C7 ,8			C91-0688-05	CERAMIC 0.033UF K		
C9 ,10			CC45FSL1H470J	CERAMIC 47PF J		
C13 ,14			C91-0668-05	CERAMIC 0.0047UF K		
C15			CE04KW1A471M	ELECTRO 470UF 10WV		
C16			CE04KW1V4R7M	ELECTRO 4.7UF 35WV		
D1			1SS133	DIODE		
D1			1SS176	DIODE		
IC1		*	NE657N	IC(DOLBY B PROCESSOR)		
MECHANISM ASS'Y (D40-0370-05:A, D40-0371-05:B)						
2	1A,1D		A53-0753-08	CASSETTE HOLDER		
801	1B,1E		A10-0829-08	CHASSIS CALKED ASSY		
6	2A,2D		D01-0071-08	FLYWHEEL ASSY (T)		
7	1B,1E		D03-0239-08	REEL DISK ASSY (S)		
8	1B,1E		D03-0240-08	REEL DISK ASSY		
9	2B,2E		D10-1471-08	LEVER (FF)		
10	2B,2E		D10-1472-08	LEVER (REW)		
11	2B,2E		D10-1473-08	LEVER (PLAY)		
12	2B,2E		D10-1478-08	LEVER (LOCK CAM)		
13	2B,2E		D10-1480-08	ARM (INTER LOCK)		
14	2B,2E		D10-1481-08	SLIDER (LOCK CAM)		
15	2B,2E		D10-1482-08	LEVER (STOP)		
16	1C,1F		D10-1486-08	LEVER (EJECT)		
17	1B,1E		D10-1487-08	LEVER ASSY		
18	1B,1E		D10-1488-08	LEVER ASSY (SHIFT ARM)		
19	2B,2E		D10-1496-08	LEVER ASSY (IDLER ARM)		
20	2B,2E		D10-1497-08	ARM (AUTO)		
21	2B,2E		D10-1498-08	ARM (AUTO LOCK)		
22	1A,1D		D10-1500-08	SLIDER (HEAD CHASSIS)		
23	2B,2E	*	D10-1760-08	LEVER ASSY (CLUTCH ARM)		
24	1B,1E		D13-0283-08	GEAR ASSY (FF)		
25	2B,2E		D13-0284-08	GEAR		
26	1B,1E		D13-0285-08	GEAR (AUTO)		
27	1B,1E		D13-0286-08	GEAR (AUTO CAM)		
28	1B,1E		D14-0126-08	IDLER (PLAY)		
29	1B,1E		D14-0127-08	PINCH ROLLER ASSY		
30	1B,1E		D15-0237-08	PULLEY (AUTO)		
31	2B,2E		D16-0121-08	BELT (AUTO)		
32	1A,1D	*	D16-0143-08	BELT (DRIVE)		
33	1A,1D	*	D16-0144-08	BELT (FR)		
34	1B,1E		D19-0077-08	CLUTCH (AUTO)		
35	2A,2D		D21-1100-08	EXTENSION SHAFT(BUTTON)		

E: Scandinavia & Europe **H**:Audio Club **K**: USA **P**: Canada **W**:Europe
T: England **U**: PX(Far East, Hawaii)
UE : AAFES(Europe) **X**: Australia **M**: Other Areas

⚠ indicates safety critical components.

www.hifiengine.com

PARTS LIST

* New Parts
Parts without **Parts No.** are not supplied.
Les articles non mentionnes dans le **Parts No.** ne sont pas fournis.
Telle ohne **Parts No.** werden nicht gellefert.

Ref. No. 参照番号	Address 位置	New Parts 新	Parts No. 部品番号	Description 部品名／規格	Destination 仕向	Remarks 備考
36	2A,2D		D23-0204-08	RETAINER (CAPSTAN SPACER		
37	2C,1F		D23-0205-08	RETAINER (HOUSING)		
38	1B,1E		D33-0018-08	LINING (AUTO CLUTCH)		
39	1C,1F		D39-0175-08	DAMPER ASSY		
40	2F		D10-1474-08	LEVER (REC)		B
41	2E		D10-1477-08	ARM (PAUSE)		B
42	1E		D10-1479-08	ARM (PAUSE)		B
43	1B,1E		F07-0471-08	COVER (SW PROTECTOR)		
44	2E		D12-0109-08	CAM (PAUSE)		B
45	2E		G01-1684-08	COMPRESSION SP (PAUSE CAM)		B
46	1E		D10-1476-08	LEVER (REC SENSOR)		B
47	2B,2E		G01-1686-08	COMPRESSION SP (FF LEVER)		
48	2B,2E		G01-1687-08	COMPRESSION SP (REW LEVER)		
49	2B,2E		G01-1688-08	COMPRESSION SP (LEVER)		
50	1A,1D		G01-1689-08	COMPRESSION SP (HEAD)		
51	1B,1E		G01-1690-18	COMPRESSION SP (BACK TENSION)		
52	1B,1E		G01-1691-08	COMPRESSION SP (AUTO CLUTCH)		
53	1B,1E		G01-1692-08	TENSION SPRING (SHIFT ARM)		
54	1A,2E		G01-1693-08	TENSION SPRING (CAM)X2		
55	2A,2D		G01-1694-08	TENSION SPRING (HD CHASSIS RTN		
56	2A,2D		G01-1695-08	TENSION SPRING (EJECT LEVER)		
57	2B,2E		G01-1696-08	TENSION SPRING (CLUTCH ARM)		
58	1A,1D		G01-1700-08	TORSION SPRING (HEAD CHASSIS)		
59	2A,2D		G01-1701-08	TORSION SPRING (P ROLLER)		
60	2C,2F		G01-1703-08	TORSION SPRING (AUTO SENSOR)		
61	2B,2E		G01-1704-08	TORSION SPRING (AUTO LOCK ARM)		
62	1A,1D		G01-1705-08	TORSION SPRING (CASSETTE CASE)		
63	2B,2E	*	G01-1914-08	TORSION SPRING (LOCK ARM)		
64	1A,1D		G02-0194-08	FLAT SPRING (CASSETTE CLAMP		
65	1B,1E	*	G02-0425-08	FLAT SPRING (PACK SP)		
66	2A,2D		G11-1120-08	CUSHION (MOTOR)		
68	2F	*	J19-2702-08	BRAKET (REC SW)		B
70	2A,2D		J19-2544-08	HOLDER (BUTTON)		
71	1C,1F		J19-2545-08	HOLDER (LEVER)		
72	1C,1F		J19-2546-08	HOLDER (LEVER)		
73	1A,1D		J19-2547-08	HOLDER (HEAD BASE)		
74	1C,1F		J19-2549-08	HOLDER ASSY (REEL BASE)		
75	2A,2D	*	J21-3896-08	MOUNTING HARDWARE(MOTOR)		
76	2A,2D	*	J21-3897-08	MOUNTING HARDWARE(FLYWHEEL)		
77	2A,2D		J30-0202-05	SPACER (HEAD)		
78	1B,1E		J31-0251-08	COLLAR		
79	2A		J31-0252-08	COLLAR (BUTTON)		A
80	1B,1E		J42-0132-08	BUSHING		
81	1B,1E		J42-0133-08	BUSHING		
--			J61-0307-05	WIRE BAND		
101	1B,1E		N19-0298-05	FLAT WASHER (Ø1.7XØ3.5XT0.25		
102	1A,1D		N19-0365-04	FLAT WASHER (Ø1.2XØ3.5XT0.25		
103	2B,2E		N19-0524-04	FLAT WASHER (Ø2.1XØ5.0XØ0.25		
104	1C,1F		N19-0935-08	FLAT WASHER (Ø2.6)		
105	1C,1F		N19-0937-08	FLAT WASHER (Ø1.9X5.0XT0.5)		
106	2A,2D		N19-1029-08	FLAT WASHER		
107	1B,1E	*	N19-1038-08	FLAT WASHER		
108	1C,1F	*	N19-1039-08	FLAT WASHER (Ø5.6XT0.188)		
A	1A,1E		N09-1507-08	STEPPED SCREW		

E: Scandinavia & Europe **H**:Audio Club **K**: USA **P**: Canada **W**:Europe
T: England **U**: PX(Far East, Hawaii)
UE : AAFES(Europe) **X**: Australia **M**: Other Areas

A:MECHANISM "A"
B:MECHANISM "B"
⚠ indicates safety critical components.

www.hifiengine.com

PARTS LIST

* New Parts
Parts without **Parts No.** are not supplied.
Les articles non mentionnes dans le **Parts No.** ne sont pas fournis.
Telle ohne **Parts No.** werden nicht gellefert.

Ref. No. 参照番号	Address 位置	New Parts 新	Parts No. 部品番号	Description 部品名／規格	Destination 仕向	Remarks 備考
B	2B,2E		N09-1508-08	STEPPED SCREW		
C	2B,2E		N09-1509-08	STEPPED SCREW		
D	2B,2E		N09-1510-08	STEPPED SCREW		
E	1C,1F		N09-1496-08	SCREW (M2X4)		
F	1A,1D		N09-1497-08	SCREW (M2X5)		
G	1B,1E	*	N09-1431-08	SCREW (M2X6)		
H	1B,1E		N09-1500-08	SCREW (M2.6X4)		
J	2A,2D		N09-1501-08	SCREW (M2.6X5)		
K	2C,2F		N09-1502-08	SCREW (M2.6X8)		
L	1C,1F		N09-1503-08	SCREW (M2.6X13)		
N	2A		N09-1505-08	SCREW M2X8.5		A
P	2A,2D		N09-1242-08	SCREW (M2X9)		
R	2A,2D		N09-1511-08	STEPPED SCREW		
S	1B,1E		N09-1220-05	SCREW (Ø2.6X5)		
S1	1B,1E		S46-1061-08	LEAF SWITCH		
S2	1B,1E		S46-1062-08	LEAF SWITCH		
S3	2F	*	S46-1089-08	LEAF SWITCH		B
116	2D		T32-0304-05	ERASE HEAD		B
116	1A		T32-0308-05	ERASE HEAD		A
118	2A,2D		T34-0317-08	REC/PLAY HEAD		
119	2A,2D		T42-0404-08	MOTOR ASSY		

E: Scandinavia & Europe **H:**Audio Club **K:** USA **P:** Canada **W:**Europe
T: England **U:** PX(Far East, Hawaii)
UE : AAFES(Europe) **X:** Australia **M:** Other Areas

A:MECHANISM "A"
B:MECHANISM "B"
⚠ indicates safety critical components.

www.hifiengine.com

SPECIFICATIONS

Type	Double Stereo Cassette Deck with Dolby B NR System
Track System	4-Track 2-Channel Stereo/Mono Record/Playback
Recording BIAS	AC (BIAS Frequency: 105 kHz)
Erasing Method	AC
Tape Speed	4.76 cm/sec (1-7/8 Ips)
Heads	Head Permalloy Record/Playback Head ×1, Playback Head ×1, Head Permalloy Playback Head ×1, Double Gap Ferrite Erasing Head ×1
Motors	Electronically-Controlled DC Motor ×2
Fast Winding Time	Approx. 105 seconds with C-60 Tape
Frequency Response	
Normal Tape	20 Hz to 15,000 Hz (30 Hz to 14,000 Hz, ±3 dB)
CrO_2 Tape	20 Hz to 16,000 Hz (30 Hz to 15,000 Hz, ±3 dB)
Metal Tape	20 Hz to 16,000 Hz (30 Hz to 15,000 Hz, ±3 dB)
Signal to Noise Ratio	
Dolby B ON	64 dB (NORMAL TAPE)
Dolby OFF	56 dB (NORMAL TAPE)
Harmonic Distortion	Less than 0.7% (at 1 kHz, 0 VU with NORMAL Tape)
Wow & Flutter	0.09% (WRMS) 0.28% (DIN)

Kenwood follows a policy of continuous advancements in development.
For this reason specifications may be changed without notice.
DOLBY and the double-D symbol are trademarks of Dolby Laboratories Licensing Corporation.
Noise reduction circuit made under license from Dolby Laboratories Licensing Corporation.

Kenwood poursuit une politique de progrès constants en ce qui concerne le développement.
Pour cette raison, les spécifications sont sujettes à modifications sans préavis.
La marque DOLBY et le double "D" sont des marques déposées des Dolby Laboratories.
Le système de réduction du bruit de fond est fabriqué sous license des Dolby Laboratories.

Kenwood strebt ständige Verbesserungen in der Entwicklung an.
Daher bleiben Änderungen der technischen Daten jederzeit vorbehalten.
DOLBY und Doppel-D-Symbol sind eingetragene Warenzeichen der Dolby Laboratories.
Dolby-Rauschunterdrückung mit Lizenz der Dolby Laboratories gefertigt.

Input Sensitivity/Impedance		
Line ×2	77.5 mV/50 kohms	
Output Level/Load Impedance		
Line ×2	270 mV (0 VU)/3.9 kohms	
Headphones ×1	0.2 mW/8 ohms	
Power Requirements	AC 220 V, 50 Hz	European Model
	AC 240 V, 50 Hz	England & Australia Models
	AC 120 V, 60 Hz	USA & Canada Models
	AC 110—120 V/220—240 V (Switchable), 50/60 Hz	Other countries
Power Consumptions	18 watts	
Dimensions	W 420 mm (16-9/16″)	
	H 123 mm (4-13/16″)	
	D 268 mm (10-9/16″)	
Weight (Net)	4.5 kg (9.9 lb)	
(Gross)	5.2 kg (11.4 lb)	
Supplied Accessories	Audio Connection Cords	
*** Reference Tapes**	Normal	KENWOOD ND/ND-X60 or TDK AD/AD-X60
	CrO_2	KENWOOD CD-60 or TDK SA-60
	Metal	KENWOOD MD-60 or TDK MA-R-60

Note:

Component and circuitry are subject to modification to insure best operation under differing local conditions. This manual is based on, the U.S. (K) standard, and provides information on regional circuit modification through use of alternate schematic diagrams, and information on regional component variations through use of parts list.

TRIO-KENWOOD CORPORATION
Shionogi Shibuya Building, 17-5, 2-chome Shibuya, Shibuya-ku, Tokyo 150, Japan

KENWOOD ELECTRONICS
DIVISION OF KENWOOD U.S.A. CORPORATION
1315 E. Watsoncenter Rd., Carson, California 90745; U.S.A.
75 Seaview Drive, Secaucus, New Jersey 07094, U.S.A.

TRIO-KENWOOD CANADA INC.,
1070 Jayson Court, Mississauga, Ontario, Canada L4W 2V5

TRIO-KENWOOD ELECTRONICS, N.V.
Leuvensesteenweg 504 B-1930 Zaventem, Belgium

TRIO-KENWOOD ELECTRONICS GmbH
Rembrücker Str. 15, 6056 Heusenstamm, West Germany

TRIO-KENWOOD FRANCE S.A.
5, Boulevard Ney, 75018 Paris, France

TRIO-KENWOOD (AUSTRALIA) PTY. LTD. (INCORPORATED IN N.S.W.)
4E Woodcock Place, Lane Cove, N.S.W. 2066, Australia

KENWOOD & LEE ELECTRONICS, LTD.
Wang Kee Building, 5th Floor, 34-37, Connaught Road, Central, Hong Kong

www.hifiengine.com