KENWOOD

DC POWER AMPLIFIER

L-07M

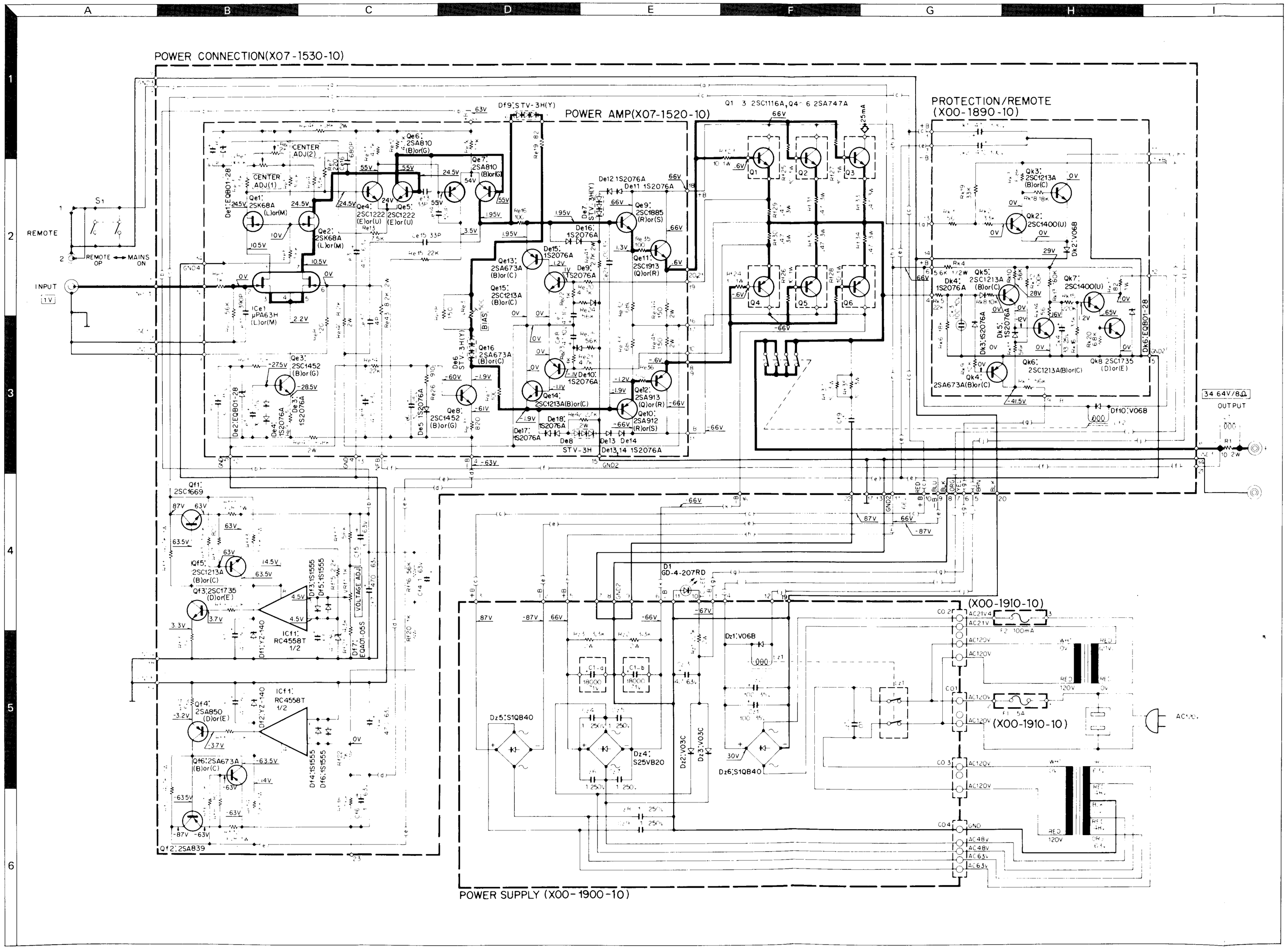

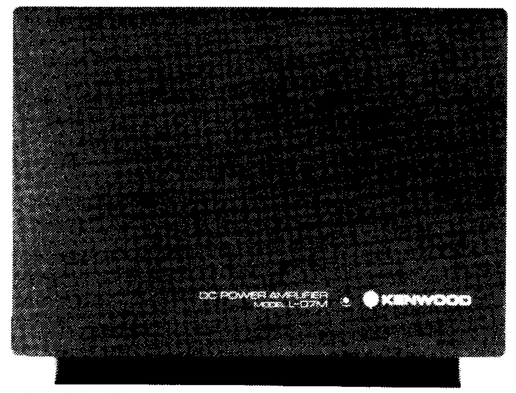

SPECIFICATIONS

PERFORMANCE

150 watts minimum RMS at 8 ohms, from 20 Hz to 20,000 Hz with no more than 0.008% total harmonic distortion.

Continuous Power	150 watts 8 ohms at 1,000 Hz
	200 watts 4 ohms at 1,000 Hz
Dynamic Power Output	300 watts 4 ohms at 1,000 Hz
Total Harmonic Distortion	0.008% at rated power output into 8 ohms
(T.H.D.)	20 Hz ~ 20 kHz
	0.008% at 15 watts into 8 ohms 20 Hz ~ 20 kHz
	0.002% at rated power into 8 ohms 1 kHz
	0.003% at 15 watts into 8 ohms 1 kHz
	0.003% at rated power into 4 ohms 1 kHz
	0.003% at 20 watts into 4 ohms 1 kHz
Intermodulation Distortion	0.002% at rated power into 8 ohms
(60 Hz : 7 kHz = 4 : 1)	0.002% at 15 watts into 8 ohms
	0.003% at rated power into 4 ohms
	0.003% at 20 watts into 4 ohms
Frequency Response	DC ~ 50,000 Hz +0, -0.5 dB
	DC ~ 150,000 Hz +0, -1.5 dB
Signal to Noise Ratio (IHF A Curve)	120 dB (short-circuited)
Damping Factor	100 into 8 ohms load
	120 into 8 ohms load without Speaker Cable
Input Sensitivity/Impedance	1 V/50 k ohms
Speaker Impedance	Accept 4 ohms to 16 ohms
Speaker Cable Loss	0.01 ohms

GENERAL
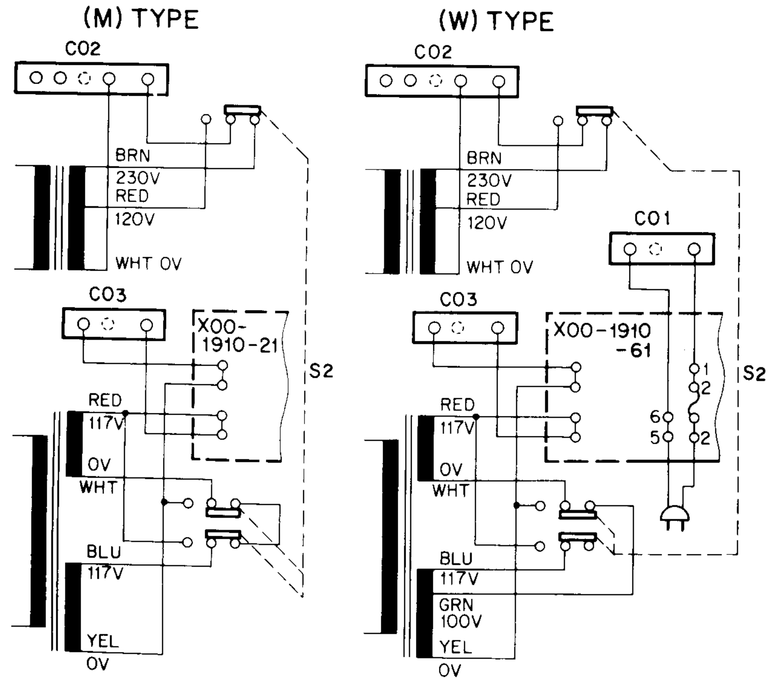
Power Consumption	630 watts at full power
	45 watts at non-signal
AC Outlet	1 UNSWITCHED (Except W, L, and T type)
	(Maximum 300 watts)
Dimensions	W 7-7/8" (200 mm)
	H 6-3/32" (155 mm)
	D 15-11/32" (390 mm)
Weight (Net)	28.5 lbs. (13 kg)
(Gross)	30.7 lbs. (14 kg)