# KENWOOD

# 3 HEAD STEREO TAPE DECK

# TT-10

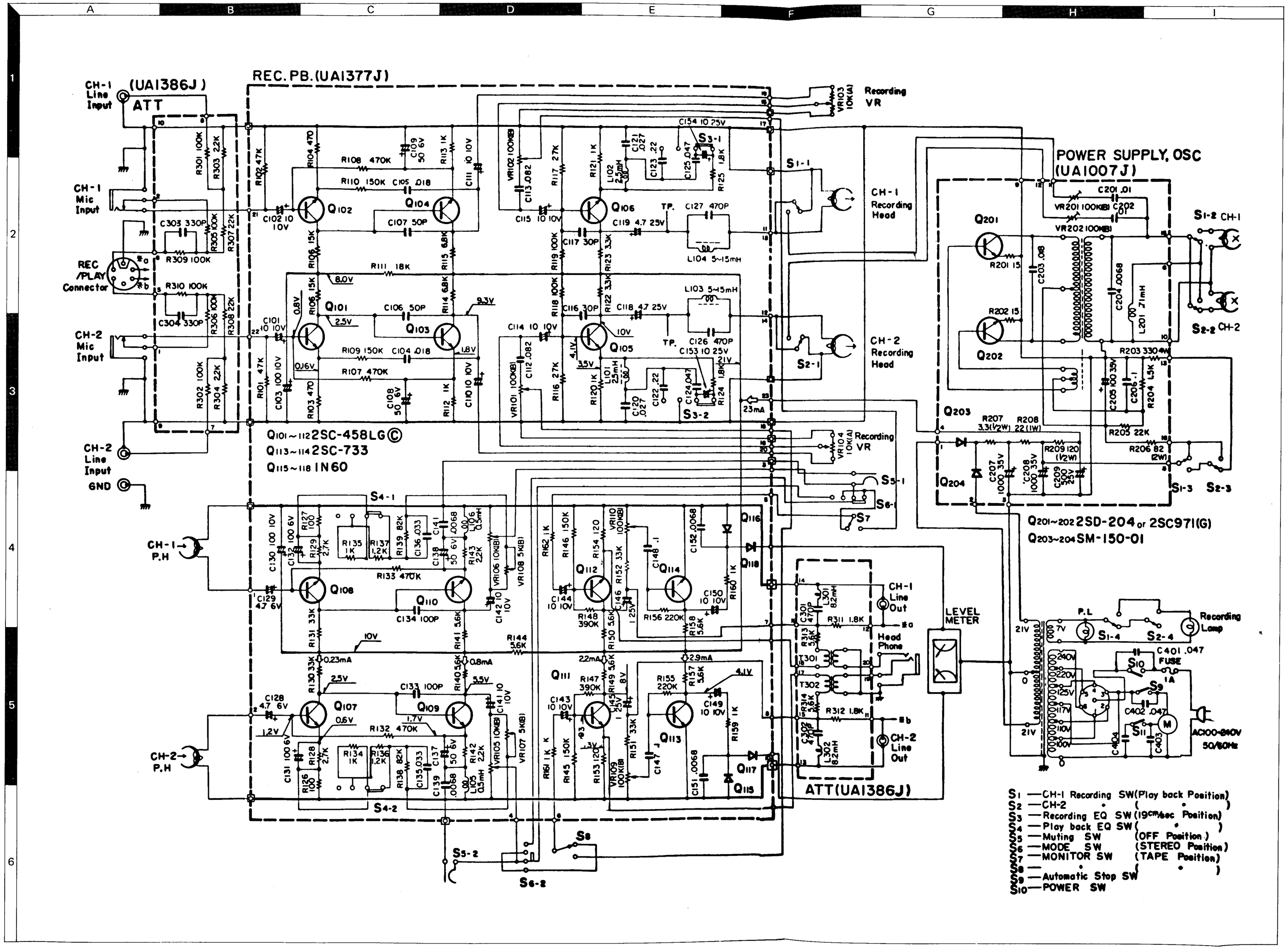


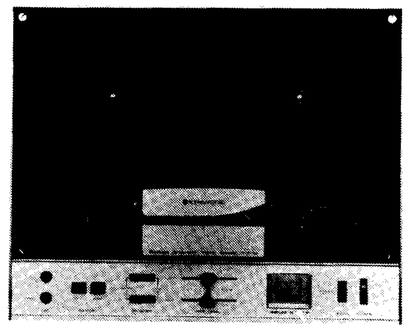

## SPECIFICATIONS

RECORDING SYSTEM: 4-Track stereo/mono recording and playback.

POWER REQUIREMENT: 100, 110, 117, 125, 220, 240V, AC 40W, 50/60 Hz.

TAPE SPEEDS: 7½ ips (19 cm/s), 3¾ ips (9.5 cm/s), 1⅞ ips (4.75 cm/s)

REELS: 7″ (18 cm) or smaller

FREQUENCY RESPONSE: Playback;
50 — 15,000 Hz 2 dB at 7½ ips
Overall;
40 — 19,000 Hz, +1 dB, −3 dB at 7½ ips
50 — 10,000 Hz, +1 dB, −3 dB at 3¾ ips
50 — 5,000 Hz, +1 dB, −4 dB at 1⅞ ips

SIGNAL-TO-NOISE RATIO: Playback; 50 dB or better
Overall; 45 dB or better

PREAMPLIFIER HARMONIC DISTORTION: Less than 0.6% at 0 dB. Recording Amp or Play-back Amp.

WOW AND FLUTTER: Less than 0.15% (R.M.S.) at 7½ ips
Less than 0.25% (R.M.S.) at 3¾ ips
Less than 0.35% (R.M.S.) at 1⅞ ips (playback)

RECORDING TIME 4-TRACK STEREO: 1.5 hrs at 7½ ips
3 hrs at 3¾ ips
6 hrs at 1⅞ ips
with 1800 Ft. tape

FAST WINDING AND REWIND TIME: Within 150 sec. with 1200 Ft tape

LEVEL INDICATION: Two VU Meters

INPUTS: Microphone Input — sensitivity −63 dBs (0.6 mV)
Input Impedance 50 K Ω
(Optimum microphone 10 — 50 K Ω)
Line Input — sensitivity −18 dBs (100 mV)
Input Impedance 100 K Ω
Rec/PB connector (DIN) input sensitivity −38 dBs (9.8 mV)

OUTPUT: Line Outputs — Output level 0 dBs (0.775V)
Optimum load impedance 100 K Ω

Rec/PB connector (DIN)
Output sensitivity 0 dBs (0.775V)
Output impedance 2.5 K Ω
Headphone outputs Impedance 8 ohms or more

EQUALIZER: NAB (Record and playback)

HEADS: 3 Heads Playback x 1 (1.7 μ gap)
Recording x 1
Erase x 1

BIAS FREQUENCY: Approx 85 Kc

TRANSISTOR: Low noise silicon transistor x 16

DIODE: x 6

OPERATING POSITION: Either horizontal or vertical

DIMENSIONS: 16″ (W) x 7-1/16″ (H) x 12-11/16″ (D)

WEIGHT: 10 Kg (22 lbs)

ACCESSORIES: Empty reel 7″
Connection cord x 2
Reel cap x 2

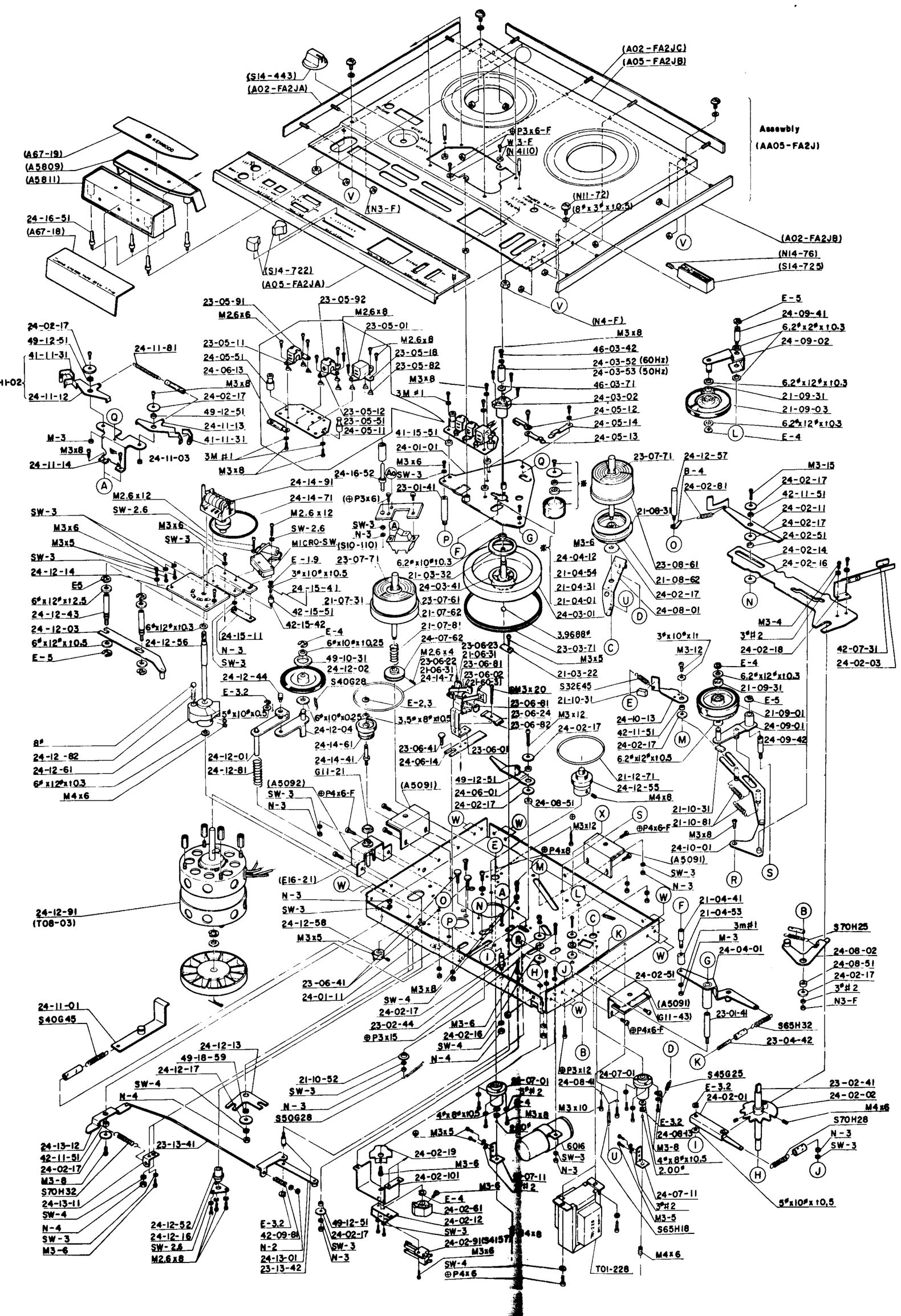
Assembly
(AA05-FA2J)
(A02-FA2JC)
(A05-FA2JB)
(S14-443)
(A02-FA2JA)
(A67-19)
(A5809)
(A5811)
24-16-51
(A67-18)
(N3-F)
(N11-72)
(S14-722)
(A05-FA2JA)
(A02-FA2JB)
(N14-76)
(S14-725)
(N4-F)
E-5
24-09-41
24-09-02
24-03-52 (60Hz)
24-03-53 (50Hz)
46-03-42
46-03-71
24-03-02
24-05-12
24-05-14
24-05-13
E-4
23-05-91
23-05-92
23-05-01
23-05-11
24-05-51
24-06-13
23-05-18
23-05-82
23-05-12
23-05-51
24-05-11
41-15-51
24-01-01
24-16-52
24-14-91
24-14-71
23-01-41
24-11-81
24-02-17
49-12-51
41-11-31
24-11-12
24-11-13
24-11-03
24-11-14
24-12-57
B-4
24-02-81
21-08-31
23-07-71
M3-15
42-11-51
24-02-11
24-02-51
24-02-14
24-02-16
24-04-12
21-04-54
21-04-31
21-04-01
24-03-01
23-08-61
21-08-62
24-02-17
24-08-01
M3-4
24-02-18
42-07-31
24-02-03
SW-3
SW-2.6
MICRO-SW (S10-110)
E-1.9
23-07-71
6.2φx10φ10.3
21-03-32
24-03-41
23-07-61
21-07-62
21-07-81
24-07-62
24-15-41
21-07-31
42-15-51
42-15-42
24-15-11
24-12-56
24-12-44
24-12-01
24-12-81
24-12-91
(T08-03)
(A5092)
(A5091)
(E16-21)
24-12-58
23-06-41
24-01-11
24-11-01
S40G45
24-12-13
49-18-59
24-12-17
21-10-52
S50G28
23-13-41
24-13-12
42-11-51
24-02-17
M3-8
S70H32
24-13-11
24-12-52
24-12-16
M2.6x8
24-02-19
24-02-101
24-02-61
24-02-12
24-02-91
24-07-01
24-08-41
24-07-11
24-08-13
24-07-11
S65H18
T01-228
S70H25
24-08-02
24-08-51
24-02-17
N3-F
S65H32
23-04-42
S45G25
24-02-01
23-02-41
24-02-02
S70H28
5φx10φx10.5

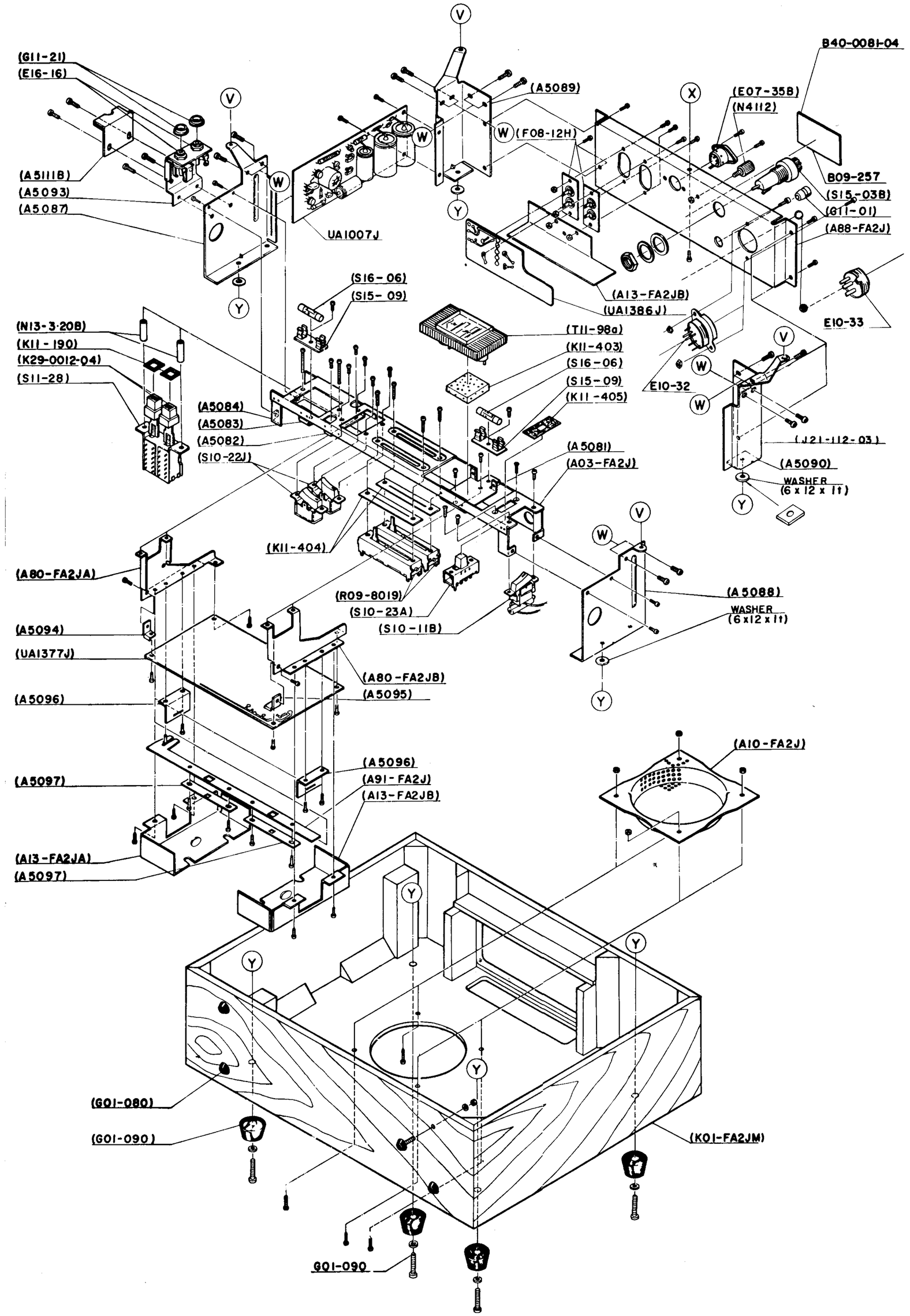
(G11-21)
(E16-16)
(A5111B)
(A5093)
(A5087)
UA1007J
(A5089)
(F08-12H)
B40-0081-04
(E07-35B)
(N4112)
B09-257
(S15-03B)
(G11-01)
(A88-FA2J)
(A13-FA2JB)
(UA1386J)
E10-33
E10-32
(S16-06)
(S15-09)
(N13-3.208)
(K11-190)
(K29-0012-04)
(S11-28)
(T11-98a)
(K11-403)
(S16-06)
(S15-09)
(K11-405)
(A5084)
(A5083)
(A5082)
(S10-22J)
(A5081)
(A03-FA2J)
(J21-112-03)
(A5090)
WASHER (6 x 12 x 11)
(K11-404)
(A80-FA2JA)
(R09-8019)
(S10-23A)
(S10-11B)
(A5088)
WASHER (6x12x11)
(A5094)
(UA1377J)
(A80-FA2JB)
(A5095)
(A5096)
(A5097)
(A10-FA2J)
(A91-FA2J)
(A13-FA2JB)
(A13-FA2JA)
(G01-080)
(G01-090)
(K01-FA2JM)
G01-090