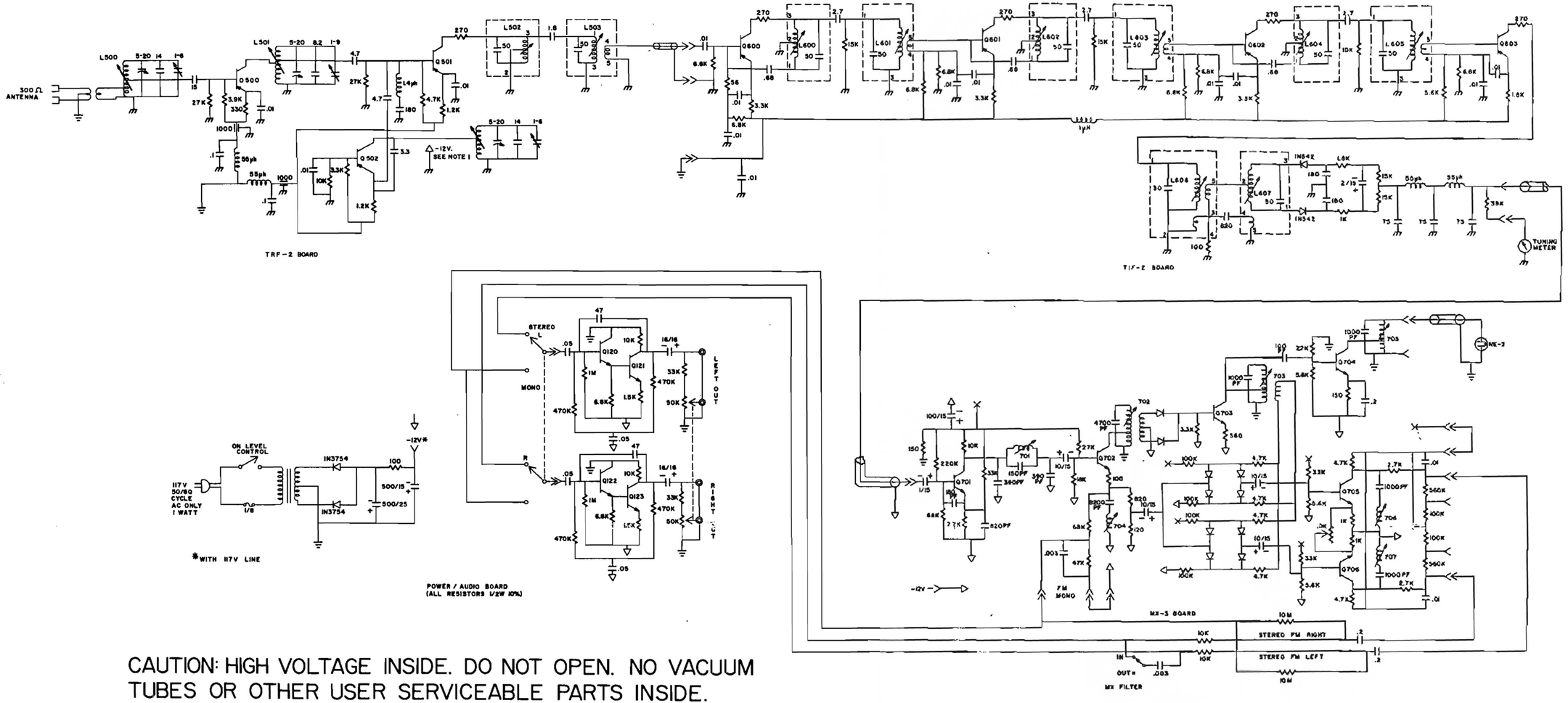

TRANSISTORS:

Q500 TI400 (TI)
Q501 TI401 (TI) or TIXM202 (TI)
Q502 2N990 or 2N2671 (AMPEREX)
Q600...Q603 TI403 (TI)
Q120...Q124 2N3707 (TI) or 2N3392 (GE)
Q701 2N3707 (TI) or 2N3392 (GE)
Q702...Q706 2N3710 (TI) or 2N3393 (GE) or 2N3392 (GE)

NOTES:
L ⏚ = L.F. AND R.F. FRONT END CHASSIS. THESE SECTIONS INSULATED FROM CHASSIS PROPER AND ARE AT -12V.
2. ALL RESISTORS ARE 1/4W 10% EXCEPT AS OTHERWISE NOTED. ALL CAPACITORS IN MICROFARADS EXCEPT AS OTHERWISE NOTED.

CAUTION: HIGH VOLTAGE INSIDE. DO NOT OPEN. NO VACUUM TUBES OR OTHER USER SERVICEABLE PARTS INSIDE. REFER SERVICING TO QUALIFIED SERVICE PERSONNEL.

117V 50 - 60CYCLE AC ONLY 1 WATT

MODEL EXPERT
FM MULTIPLEX TUNER
KLH RESEARCH & DEVELOPMENT CORPORATION
CAMBRIDGE, MASS.

REVISION E 11/24/63