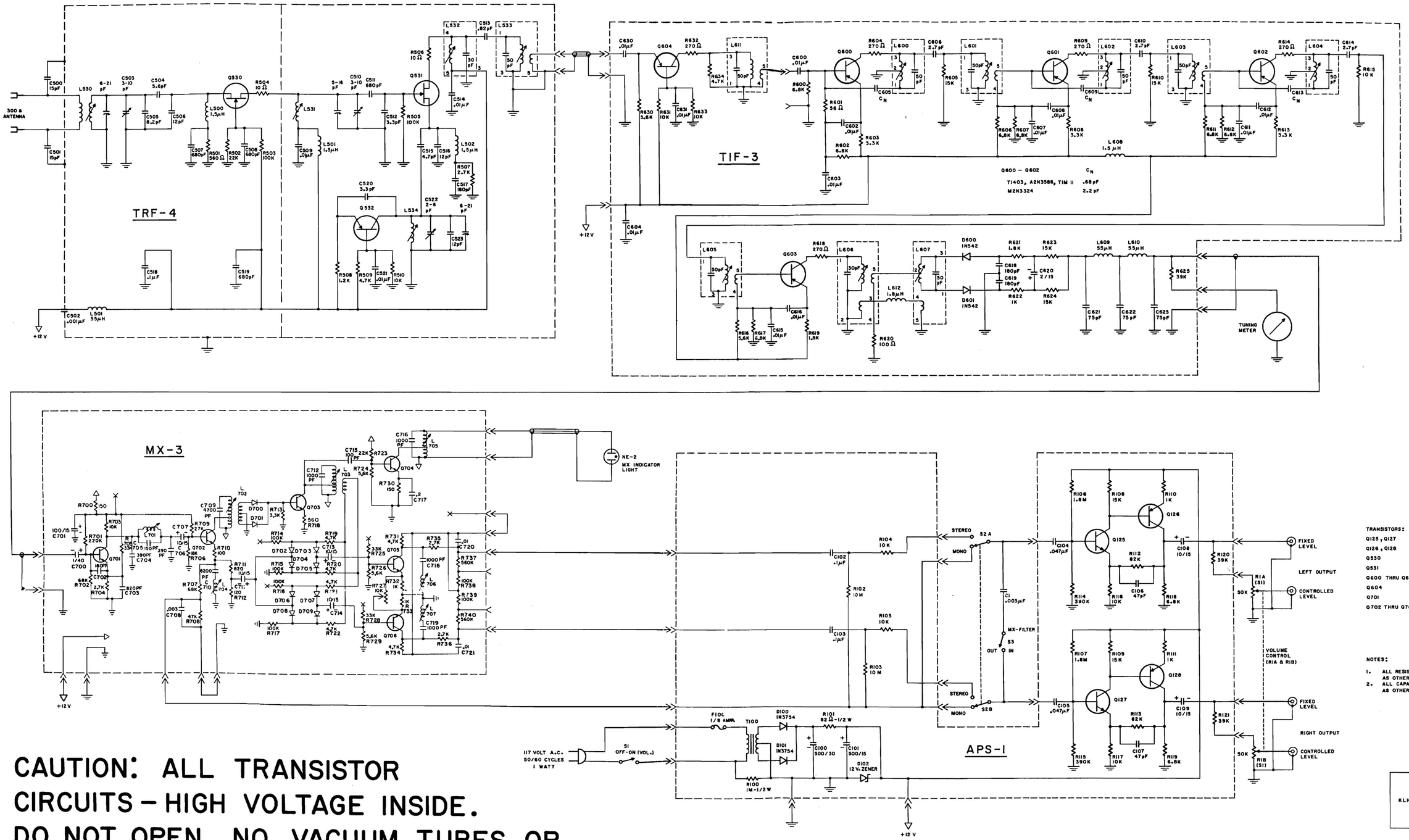

TRANSISTORS:

Q125, Q127	–	GE 2N3392
Q126, Q128	–	F 2N4249, M MPS 6518
Q530	–	TI SF7718
Q531	–	TI SF7946
Q600 THRU Q603	–	A 2N3388, TIM 11, TI 403
Q604	–	M 2N3324, A 2N990, TIM 11
Q701	–	GE 2N3392, TI 2N3707
Q702 THRU Q706	–	GE 2N3392, TI 2N3710

NOTES:

1. ALL RESISTORS ARE 1/4 WATT 10% EXCEPT AS OTHERWISE NOTED.
2. ALL CAPACITORS ARE IN MICROFARADS EXCEPT AS OTHERWISE NOTED.

MODEL EIGHTEEN
FM MULTIPLEX TUNER
KLH RESEARCH & DEVELOPMENT CORPORATION
CAMBRIDGE, MASS.
APPROVED:

REVISION F 1-19-67

CAUTION: ALL TRANSISTOR CIRCUITS – HIGH VOLTAGE INSIDE. DO NOT OPEN. NO VACUUM TUBES OR OTHER USER SERVICEABLE PARTS INSIDE. REFER SERVICING TO QUALIFIED SERVICE PERSONNEL. 117 VOLTS 50-60 CYCLES A.C. ONLY, 1 WATT MAXIMUM.