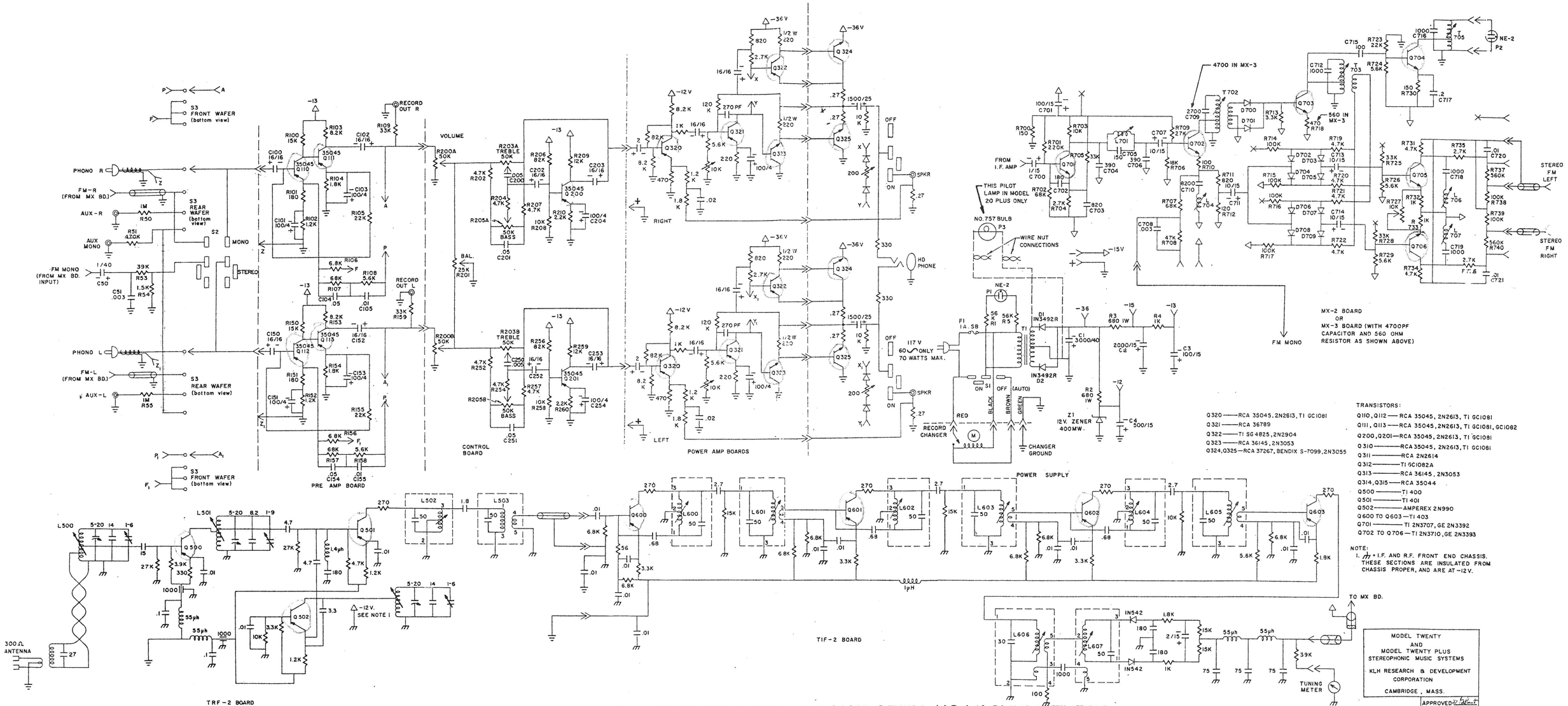

TRANSISTORS:

Q110, Q111 — RCA 35045, 2N2613, TI GC108I
Q111, Q113 — RCA 35045, 2N2613, TI GC108I, GC108Z
Q200, Q201 — RCA 35045, 2N2613, TI GC108I
Q310 — RCA 35045, 2N2613, TI GC108I
Q311 — RCA 2N2614
Q312 — TI GC108Z A
Q313 — RCA 36145, 2N3053
Q314, Q315 — RCA 35044
Q500 — TI 400
Q501 — TI 401
Q502 — AMPEREX 2N990
Q600 TO Q603 — TI 403
Q701 — TI 2N3707, GE 2N3392
Q702 TO Q706 — TI 2N3710, GE 2N3393

Q320 — RCA 35045, 2N2613, TI GC108I
Q321 — RCA 36789
Q322 — TI SG4825, 2N2904
Q323 — RCA 36145, 2N3053
Q324, Q325 — RCA 37267, BENDIX S-7099, 2N3055

NOTE:
1. ⏚ = I.F. AND R.F. FRONT END CHASSIS. THESE SECTIONS ARE INSULATED FROM CHASSIS PROPER, AND ARE AT -12V.

MODEL TWENTY AND MODEL TWENTY PLUS STEREOPHONIC MUSIC SYSTEMS

KLH RESEARCH & DEVELOPMENT CORPORATION

CAMBRIDGE, MASS.

APPROVED

REVISION J
12/10/65

CAUTION: HIGH VOLTAGE INSIDE. DO NOT OPEN. NO VACUUM TUBES OR OTHER USER SERVICEABLE PARTS INSIDE. REFER SERVICING TO QUALIFIED SERVICE PERSONNEL.

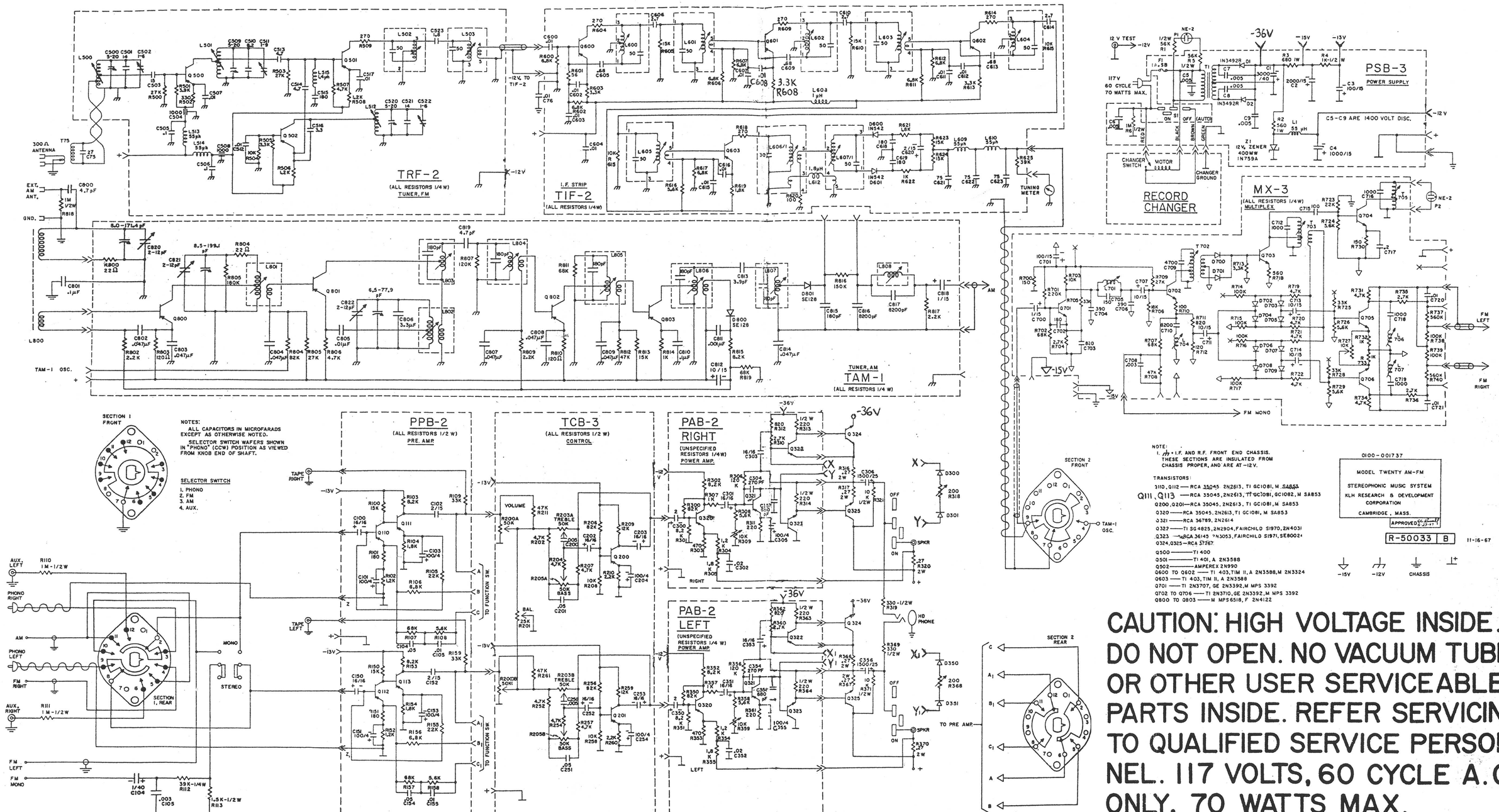
TRF-2
(ALL RESISTORS 1/4 W)
TUNER, FM
I.F. STRIP
TIF-2
(ALL RESISTORS 1/4W)
TAM-1
(ALL RESISTORS 1/4 W)
TUNER, AM
PSB-3
POWER SUPPLY
C5-C9 ARE 1400 VOLT DISC.
RECORD CHANGER
MX-3
(ALL RESISTORS 1/4 W)
MULTIPLEX
PPB-2
(ALL RESISTORS 1/2 W)
PRE. AMP
TCB-3
(ALL RESISTORS 1/2 W)
CONTROL
PAB-2
RIGHT
(UNSPECIFIED RESISTORS 1/4W)
POWER AMP.
PAB-2
LEFT
(UNSPECIFIED RESISTORS 1/4 W)
POWER AMP
SECTION 1 FRONT
SECTION 1, REAR
SECTION 2 FRONT
SECTION 2 REAR
NOTES:
ALL CAPACITORS IN MICROFARADS EXCEPT AS OTHERWISE NOTED.
SELECTOR SWITCH WAFERS SHOWN IN "PHONO" (CCW) POSITION AS VIEWED FROM KNOB END OF SHAFT.
SELECTOR SWITCH
1. PHONO
2. FM
3. AM
4. AUX.
NOTE:
1. ⏚ = I.F. AND R.F. FRONT END CHASSIS. THESE SECTIONS ARE INSULATED FROM CHASSIS PROPER, AND ARE AT -12V.
TRANSISTORS:
Q110, Q112 — RCA 35045 2N2613, TI GC108I, M SA853
Q111, Q113 — RCA 35045, 2N2613, TI GC108I, GC1082, M SA853
Q200, Q201 — RCA 35045, 2N2613, TI GC108I, M SA853
Q320 — RCA 35045, 2N2613, TI GC108I, M SA853
Q321 — RCA 36789, 2N2614
Q322 — TI SG4825, 2N2904, FAIRCHILD SI970, 2N4031
Q323 — RCA 36145 2N3053, FAIRCHILD SI971, SE80024
Q324, Q325 — RCA 37267
Q500 — TI 400
Q501 — TI 401, A 2N3588
Q502 — AMPEREX 2N990
Q600 TO Q602 — TI 403, TIM 11, A 2N3588, M 2N3324
Q603 — TI 403, TIM 11, A 2N3588
Q701 — TI 2N3707, GE 2N3392, M MPS 3392
Q702 TO Q706 — TI 2N3710, GE 2N3392, M MPS 3392
Q800 TO Q803 — M MPS6518, F 2N4122
0100-00173 7
MODEL TWENTY AM-FM
STEREOPHONIC MUSIC SYSTEM
KLH RESEARCH & DEVELOPMENT CORPORATION
CAMBRIDGE, MASS.
APPROVED
R-50033 B
11-16-67
-15V
-12V
CHASSIS
CAUTION: HIGH VOLTAGE INSIDE. DO NOT OPEN. NO VACUUM TUBES OR OTHER USER SERVICEABLE PARTS INSIDE. REFER SERVICING TO QUALIFIED SERVICE PERSONNEL. 117 VOLTS, 60 CYCLE A.C. ONLY, 70 WATTS MAX.