SERVICE MANUAL

for

KLH* MODEL TWENTY-ONE

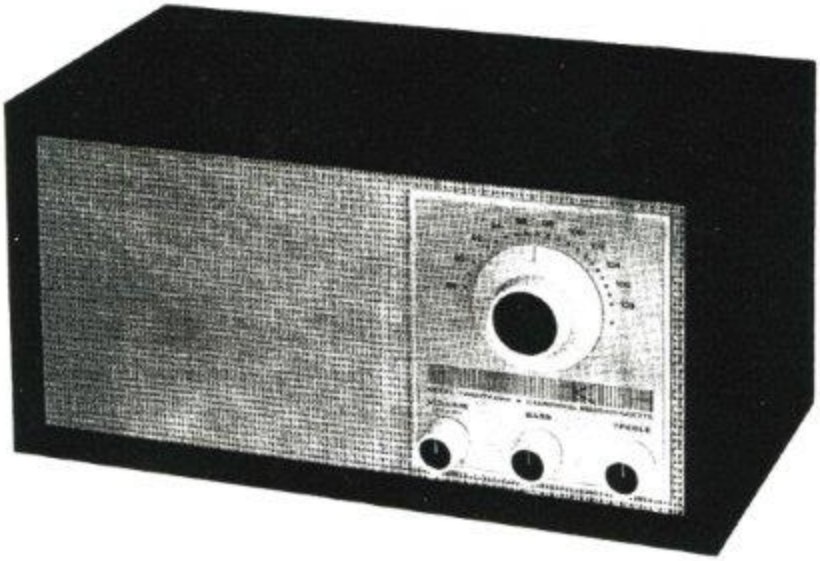

*A TRADEMARK OF KLH RESEARCH AND DEVELOPMENT CORP.

TABLE OF CONTENTS

Page	1	Theory of Operation
	2	Block Diagram
	3	Disassembly Instructions
	4	Printed Circuit Boards (Photos, Top View)
	8	Test Information
	9	Diagram Test Points - Schematics
	16	Alignment Charts and Instructions
	20	Parts Lists and Addendum
	27	Schematic Diagrams

MODEL TWENTY-ONE THEORY OF OPERATION

The Model Twenty-One is a high quality, compact, solid state FM-Receiving system featuring wide frequency response, low distortion, high sensitivity, low drift and minimal power consumption.

It uses either its built-in line antenna or an external 300 ohm balanced antenna to drive Q520 the RF amplifier. Q522 is the local oscillator which heterodynes the incoming signal in the Mixer Transistor Q521. The output of Q521 is tuned by L522 and L523 for rejection of all but the 10.7 mc component which carries the modulation which was impressed upon the carrier.

The 10.7 mc signal is coupled to the I. F. strip where it is amplified by Q600 - Q602 then limited by Q603 in order to maintain constant volume with widely varying signal strengths and to permit a maximum rejection of AM components.

After limiting the signal is demodulated by the Ratio Detector which provides a signal output for Audio amplification and a D.C. potential for connection of a plus or minus 75 micro-ampere, zero center tuning meter from tuner output jack to ground.

The signal is split into two paths which pass through separate de-emphasis networks and feed the Tuner Output and Audio control section. The Audio control section consists of Q330 which amplifies the incoming signal and feeds part of its output back to its input through two frequency selective networks including a bass pot to vary low frequency feedback and a treble pot to vary high frequency feedback, and a volume control to determine output loudness.

The signal is then amplified by Q331 and Q332 and transformer coupled to Q333 and Q334 which operate in a single-ended push-pull design to feed the built-in speaker and/or an external speaker.

The power supply is a transformer type feeding a full wave rectifier and Pi type R/C filter which provides positive voltages to power the various stages of the receiver.

BLOCK DIAGRAM MODEL TWENTY – ONE

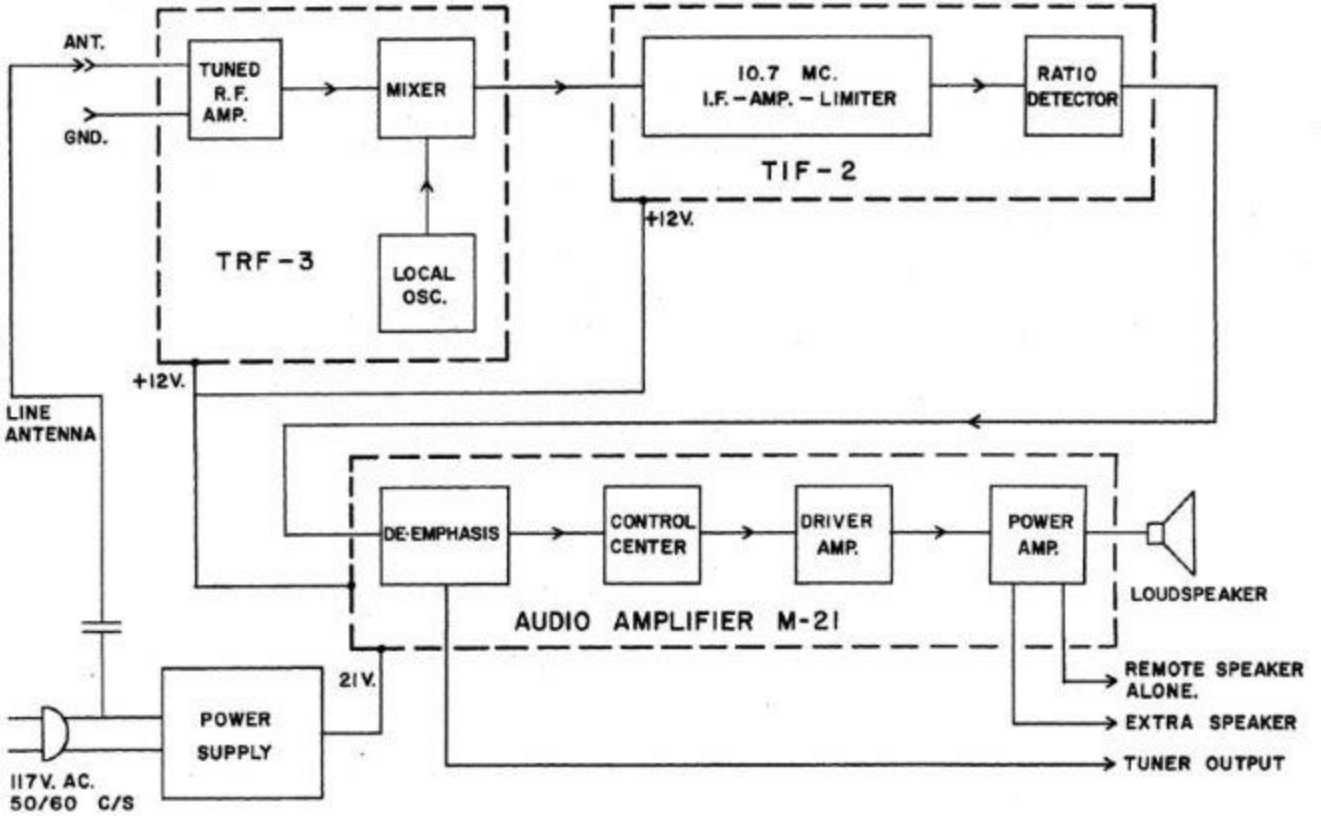

Model 21 Disassembly Instructions

1.) Tune to 88 Mc.
2.) Remove back cover by loosening ONLY screws shown below and carefully pulling straight back. Then remove bag of Fibreglas.
3.) Remove all four bottom screws.
4.) Pull chassis straight back until wooden brace is reached then tilt rear upward to clear brace.

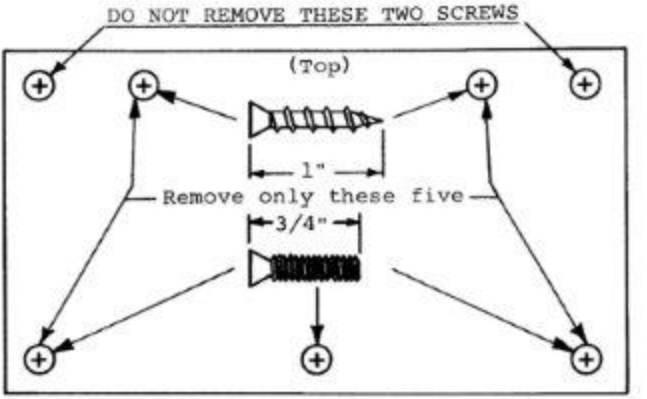

Rear View of Model 21

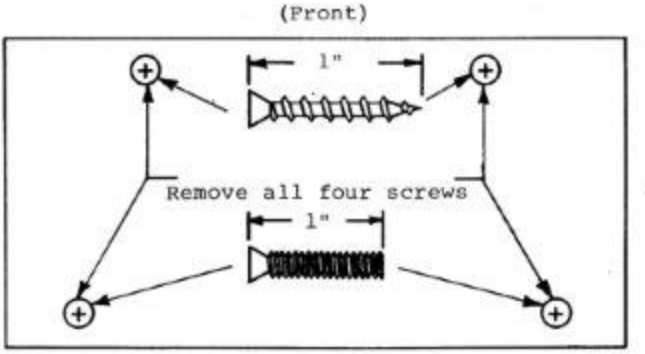

Bottom view of Model 21

KLH MODEL 21

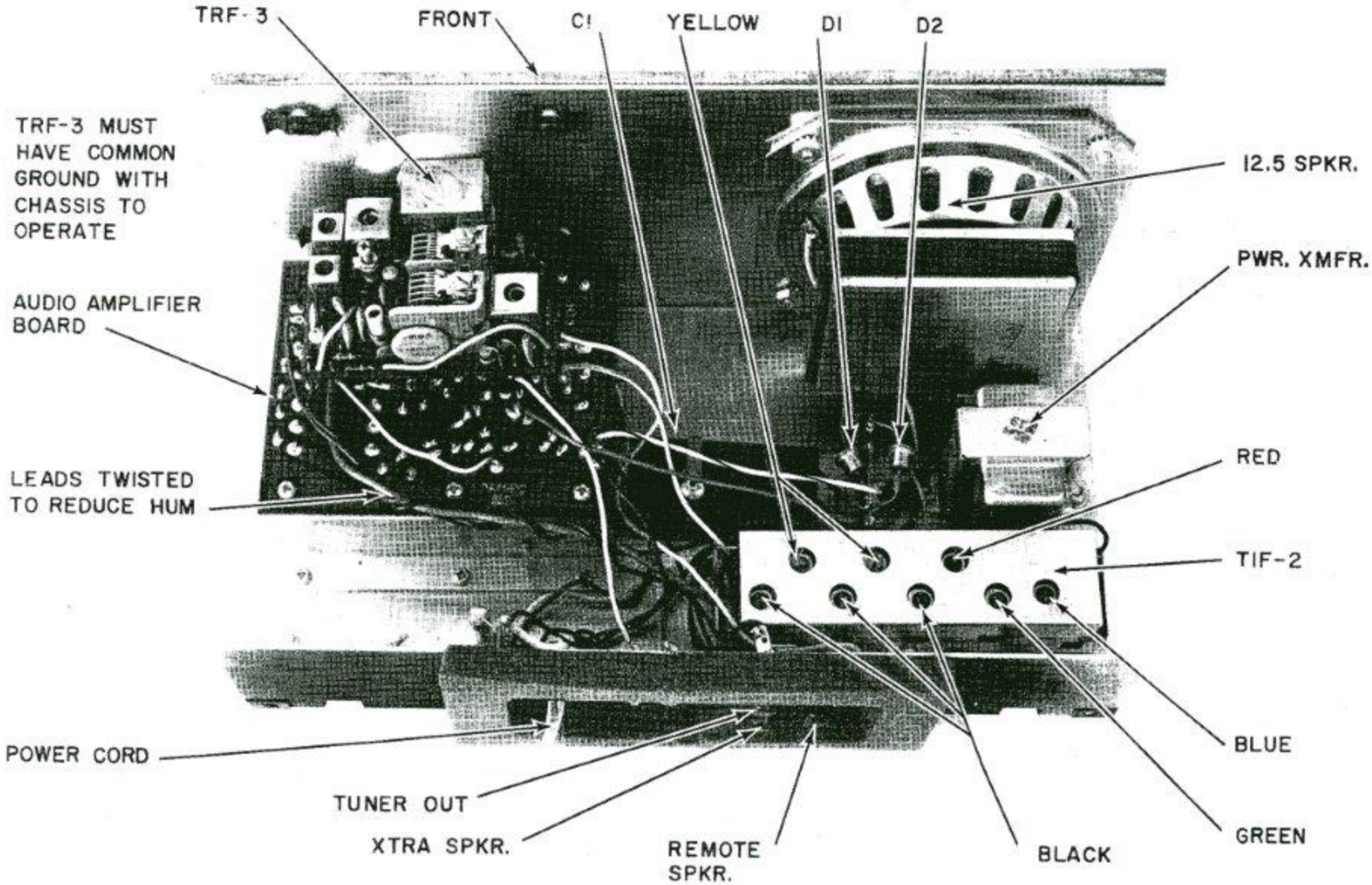
TRF-3
FRONT
C1
YELLOW
D1
D2
TRF-3 MUST HAVE COMMON GROUND WITH CHASSIS TO OPERATE
12.5 SPKR.
PWR. XMFR.
AUDIO AMPLIFIER BOARD
LEADS TWISTED TO REDUCE HUM
RED
TIF-2
BLUE
POWER CORD
TUNER OUT
XTRA SPKR.
REMOTE SPKR.
BLACK
GREEN

TRF-3

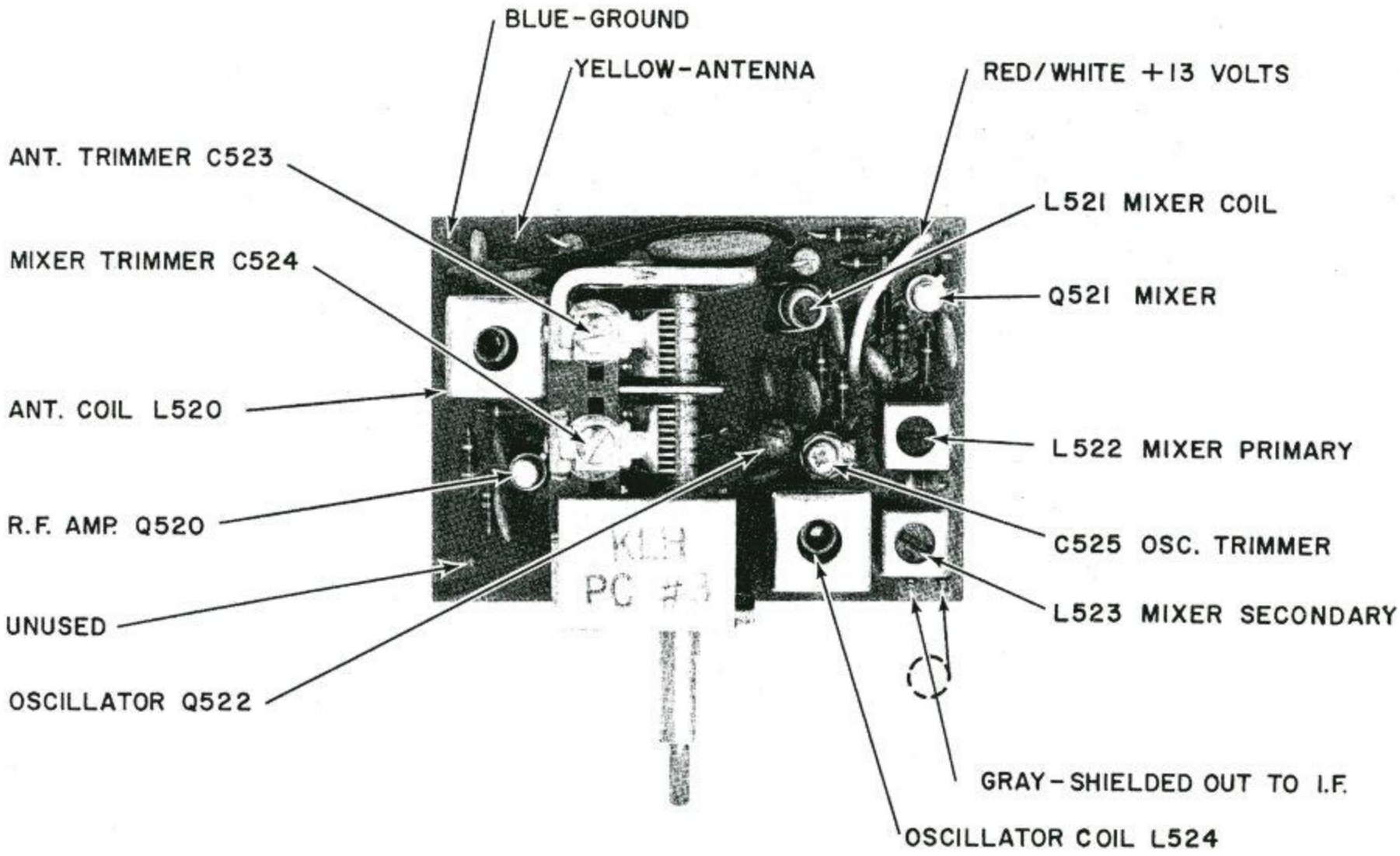
BLUE-GROUND
YELLOW-ANTENNA
RED/WHITE +13 VOLTS
ANT. TRIMMER C523
L521 MIXER COIL
MIXER TRIMMER C524
Q521 MIXER
ANT. COIL L520
L522 MIXER PRIMARY
R.F. AMP. Q520
C525 OSC. TRIMMER
UNUSED
L523 MIXER SECONDARY
OSCILLATOR Q522
GRAY-SHIELDED OUT TO I.F.
OSCILLATOR COIL L524
KLH
PC

TIF-2 BOARD

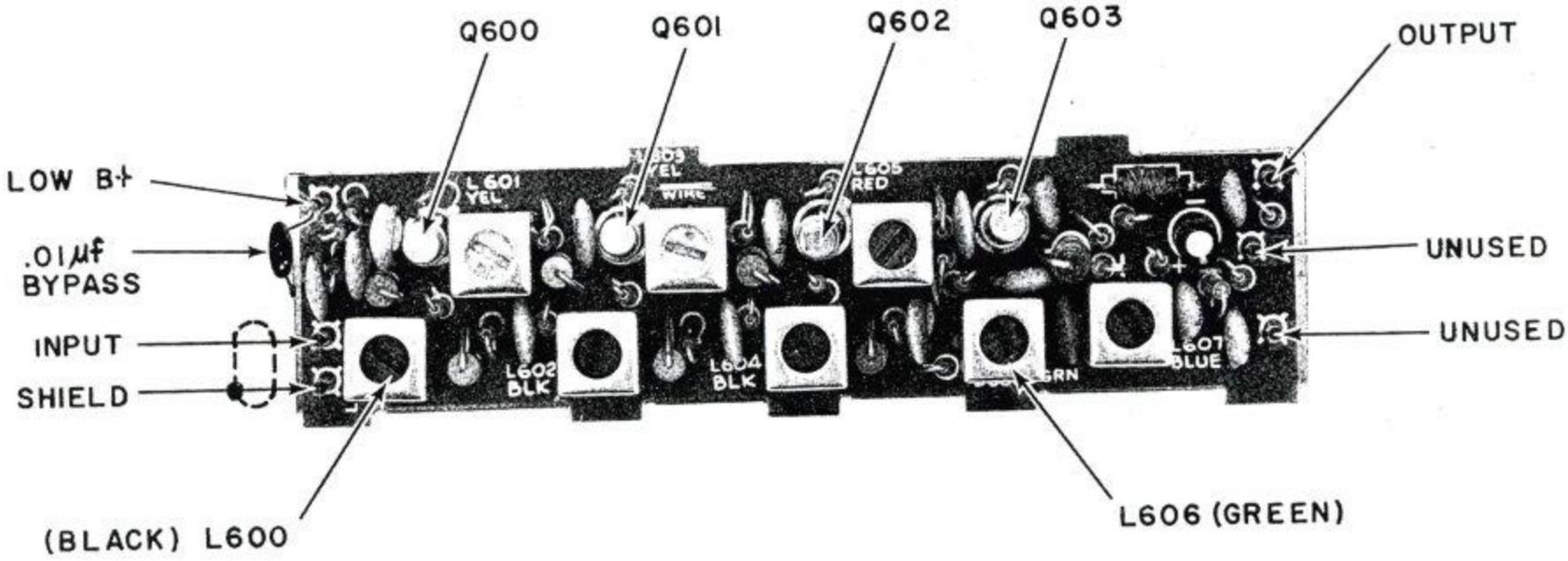
Q600
Q601
Q602
Q603
OUTPUT
LOW B+
.01µf
BYPASS
INPUT
SHIELD
UNUSED
UNUSED
L601
YEL
L605
RED
L602
BLK
L604
BLK
L607
BLUE
(BLACK) L600
L606 (GREEN)

MODEL 21 AUDIO AMPLIFIER BOARD

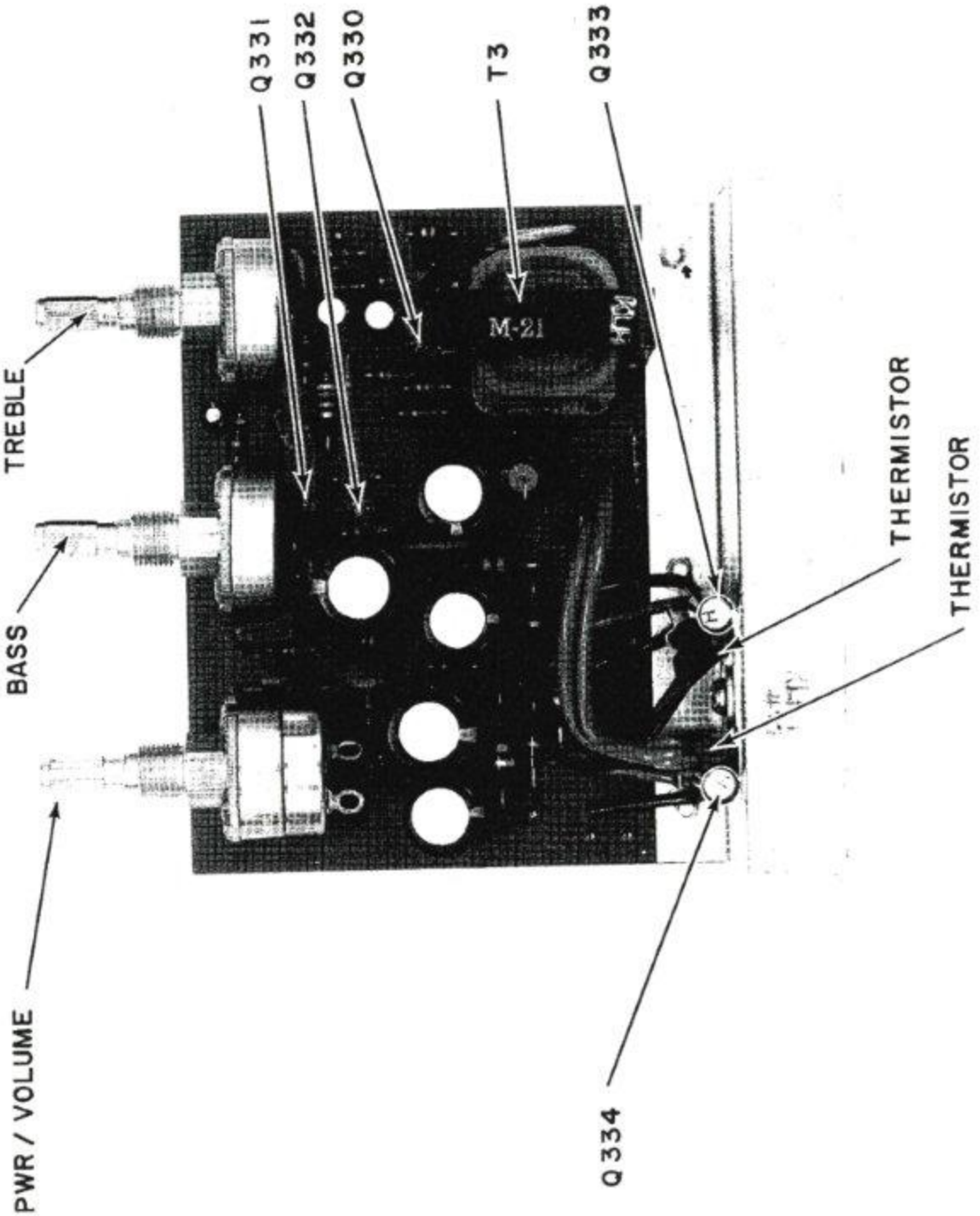

The following pages are divided into TRF-3, TIF-2 and M21 Audio Amplifier Board for ease in servicing. All voltages were taken with a Hewlett-Packard 410C Vacuum Tube Voltmeter and should be within ± 20%. All voltages are positive and referenced to chassis ground unless otherwise noted. All resistance measurements were made with the negative probe to chassis ground and due to the wide variations of internal resistance of semi-conductor devices are given only as approximations. Voltmeter probe should be sharply pointed to avoid accidental shorts due to slipping probe and insure accurate measurements. Resistance measurements should be taken only after removal of power and discharge of filter capacitors in order to avoid possible meter damage.

All voltage readings are taken with Bass and Treble controls in the center of their range, volume at minimum and receiver tuned to station at approximately 100 Mc.

NOTE: Nominal voltage at "tuner output" should be 0.2 to 0.3 Volts rms with a 400-cycle modulating frequency producing 75 kc deviation in an fm generator. This signal will also produce an output of 4 to 5 volts across the speaker voice coil, or across an 8 ohm dummy load in a properly functioning receiver, with volume control at approximately the 1 o'clock position and tone controls at their mid positions.

KLH MODEL 21 TRF-3 BOARD

	-DC VOLTS	RESISTANCE TO GROUND
1	2.65 Volts	1.4K ohms
2	2.95 Volts	4.5K ohms
3	12.8 Volts	0 ohms
4	2.38 Volts	4K ohms
5	2.05 Volts	1.5K
6	12.8 Volts	270 ohms
7	12.8 Volts	0 ohms
8	4.35 Volts	3.4K ohms
9	4.22 Volts	1.4K ohms

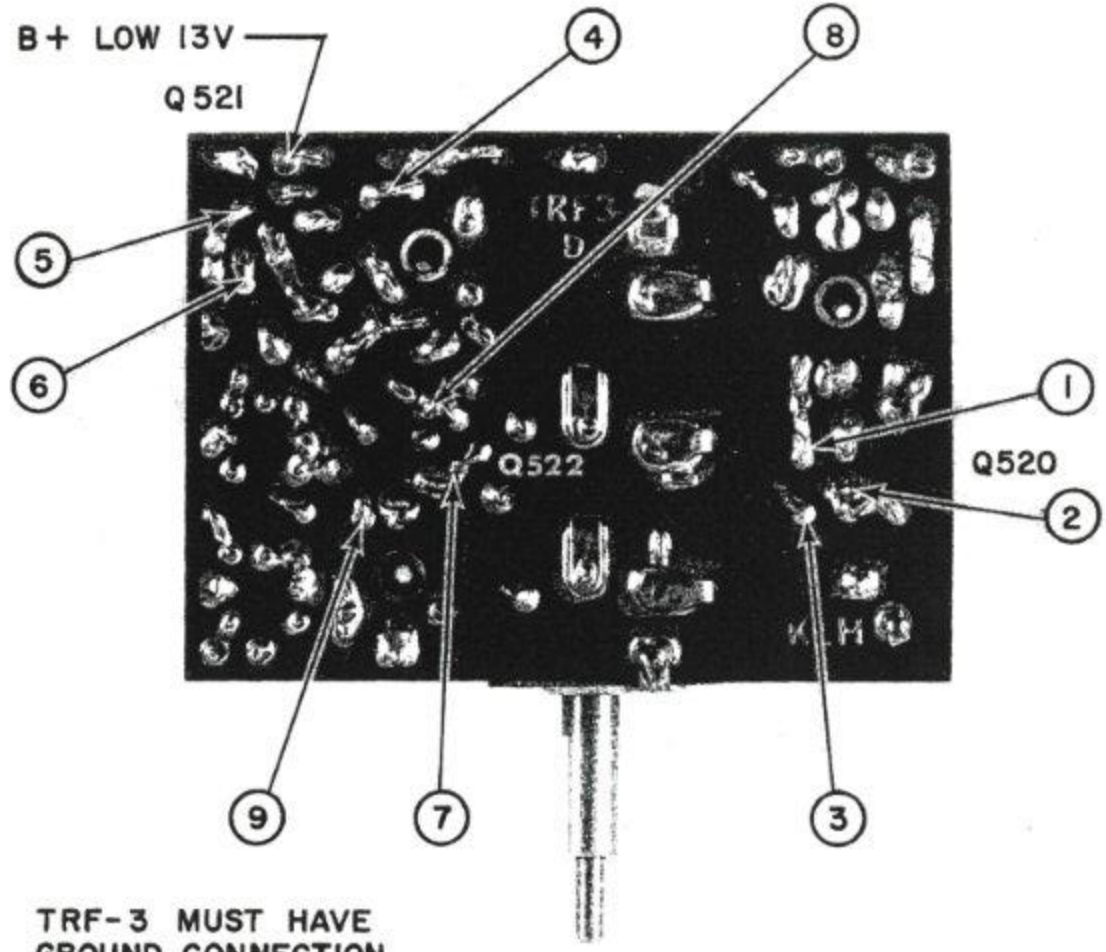

TRF-3 MUST HAVE
GROUND CONNECTION
TO CHASSIS TO OPERATE.

TRF-3 BOARD

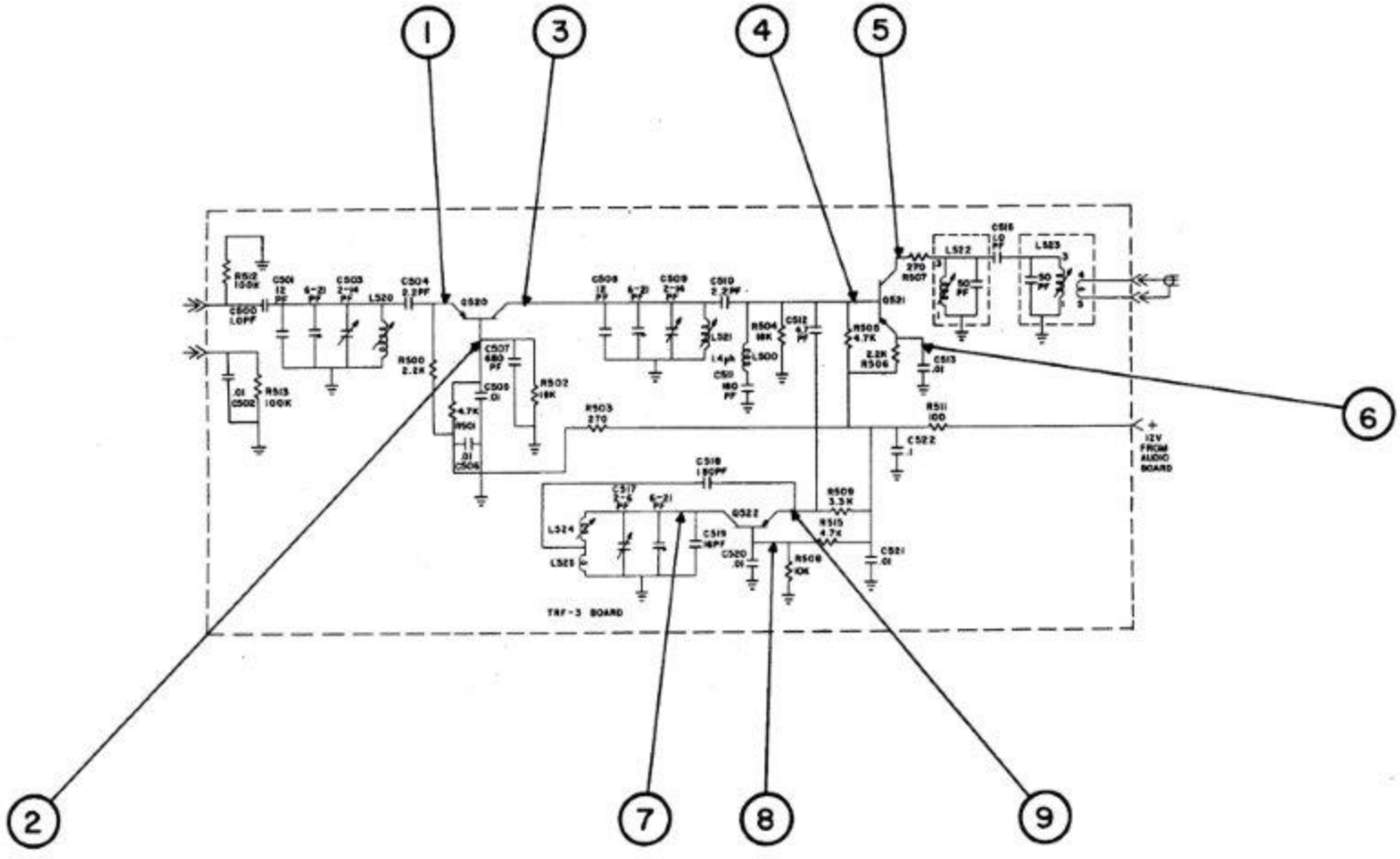

KLH TUNED I.F STRIP #2

	—D.C. VOLTS REF. TO 14	RESISTANCE TO GROUND
1	6.4 Volts	3.25K ohms
2	6.1 Volts	1K ohms
3	12.5 Volts	270 ohms
4	6.4 Volts	3.25K ohms
5	6.1 Volts	1K ohms
6	12.5 Volts	270 ohms
7	6.4 Volts	3.25K ohms
8	6.2 Volts	1K ohms
9	12.5 Volts	270 ohms
10	5.9 Volts	3.25K ohms
11	12.2 Volts	1K ohms
12	5.6 Volts	270 ohms
13	13 Volts	100 ohms

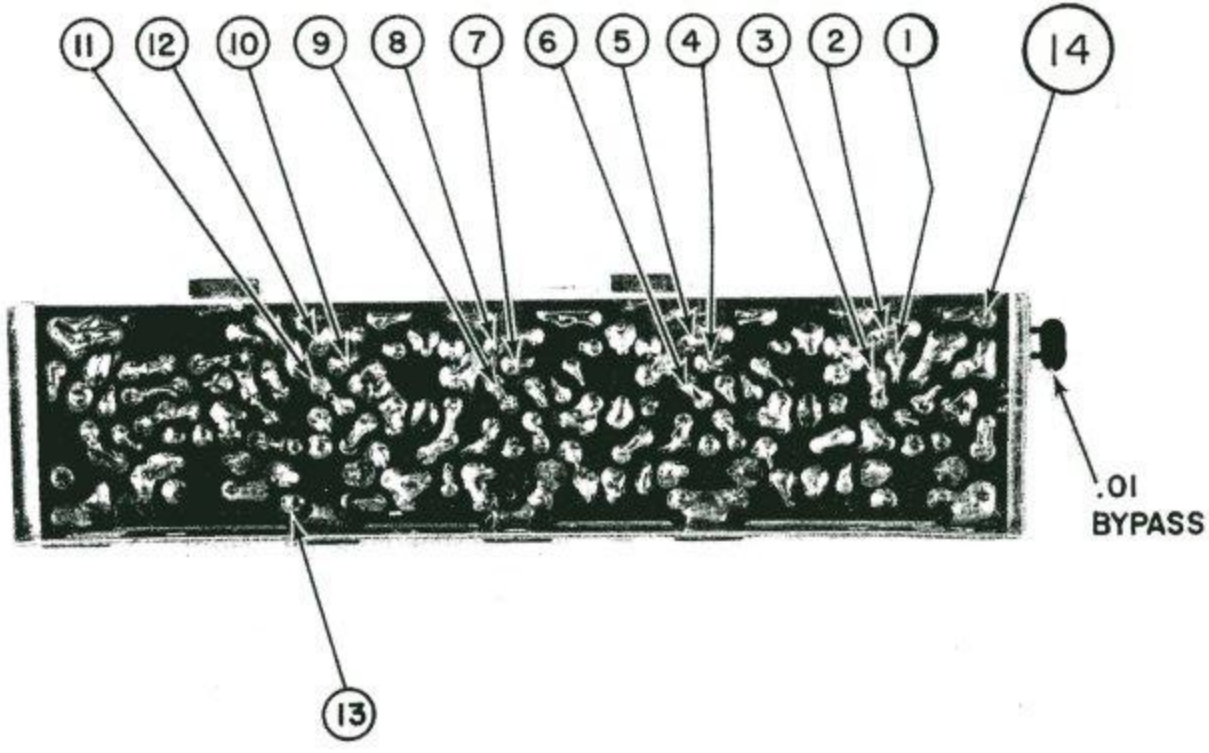

TIF-2 BOARD

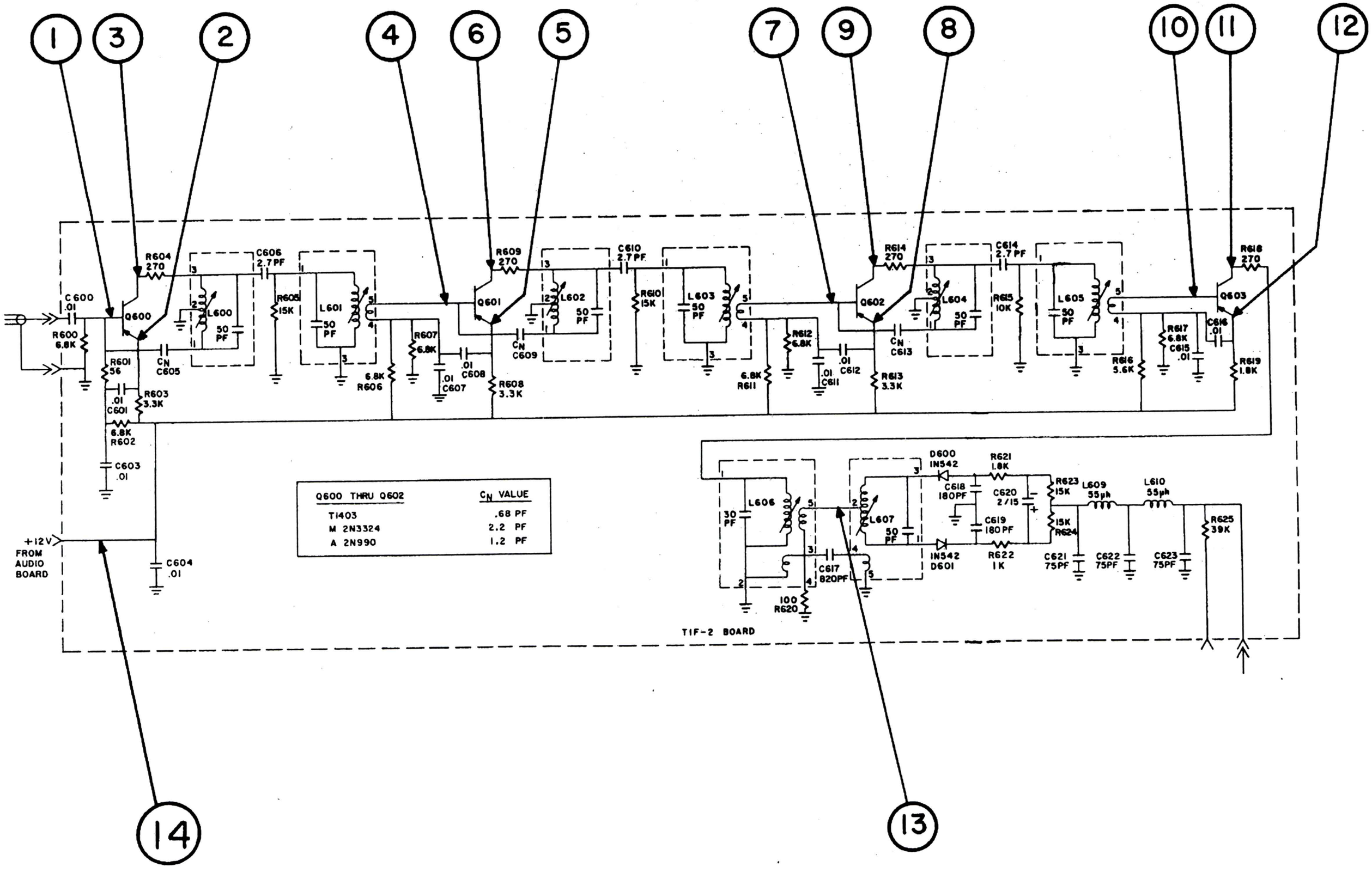
1
3
2
4
6
5
7
9
8
10
11
12
14
13
C600 .01
R600 6.8K
Q600
R601 56
.01 C601
R603 3.3K
6.8K R602
C603 .01
C604 .01
+12V FROM AUDIO BOARD
R604 270
C606 2.7PF
L600
50 PF
R605 15K
L601
50 PF
6.8K R606
R607 6.8K
.01 C607
.01 C608
R608 3.3K
R609 270
Q601
CN C609
C610 2.7PF
L602
50 PF
R610 15K
L603
50 PF
6.8K R611
R612 6.8K
.01 C611
.01 C612
R613 3.3K
R614 270
Q602
CN C613
C614 2.7PF
L604
50 PF
R615 10K
L605
50 PF
R616 5.6K
R617 6.8K
C615 .01
C616 .01
R618 270
Q603
R619 1.8K
CN C605
Q600 THRU Q602
CN VALUE
T1403 .68 PF
M 2N3324 2.2 PF
A 2N990 1.2 PF
L606
30 PF
100 R620
C617 820PF
L607
50 PF
D600 IN542
C618 180PF
R621 1.8K
C620 2/15
C619 180PF
R622 1K
IN542 D601
R623 15K
15K R624
L609 55μh
L610 55μh
C621 75PF
C622 75PF
C623 75PF
R625 39K
TIF-2 BOARD

KLH MODEL 21 AUDIO AMPLIFIER BOARD

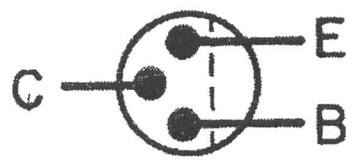

BOTTOM VIEW

	+ D.C. VOLTS	RESISTANCE TO GROUND
1	1.36 Volts	8.5K ohms
2	.72 Volts	2.2K ohms
3	9 Volts	23K ohms
4	.615 Volts	1.25K ohms
5	.038 Volts	240 ohms
6	3.6 Volts	325 ohms
7	3.08 Volts	330 ohms
8	18.6 Volts	130K ohms
9	21.8 Volts	1.3K ohms
10	10.4 Volts	1K ohms
11	22 Volts	1.25K ohms
12	10.48 Volt	950 ohms
13	11.5 Volts	1K ohms
14	10.95 Volt	1K ohms
15	21.8 Volts	1.5K ohms

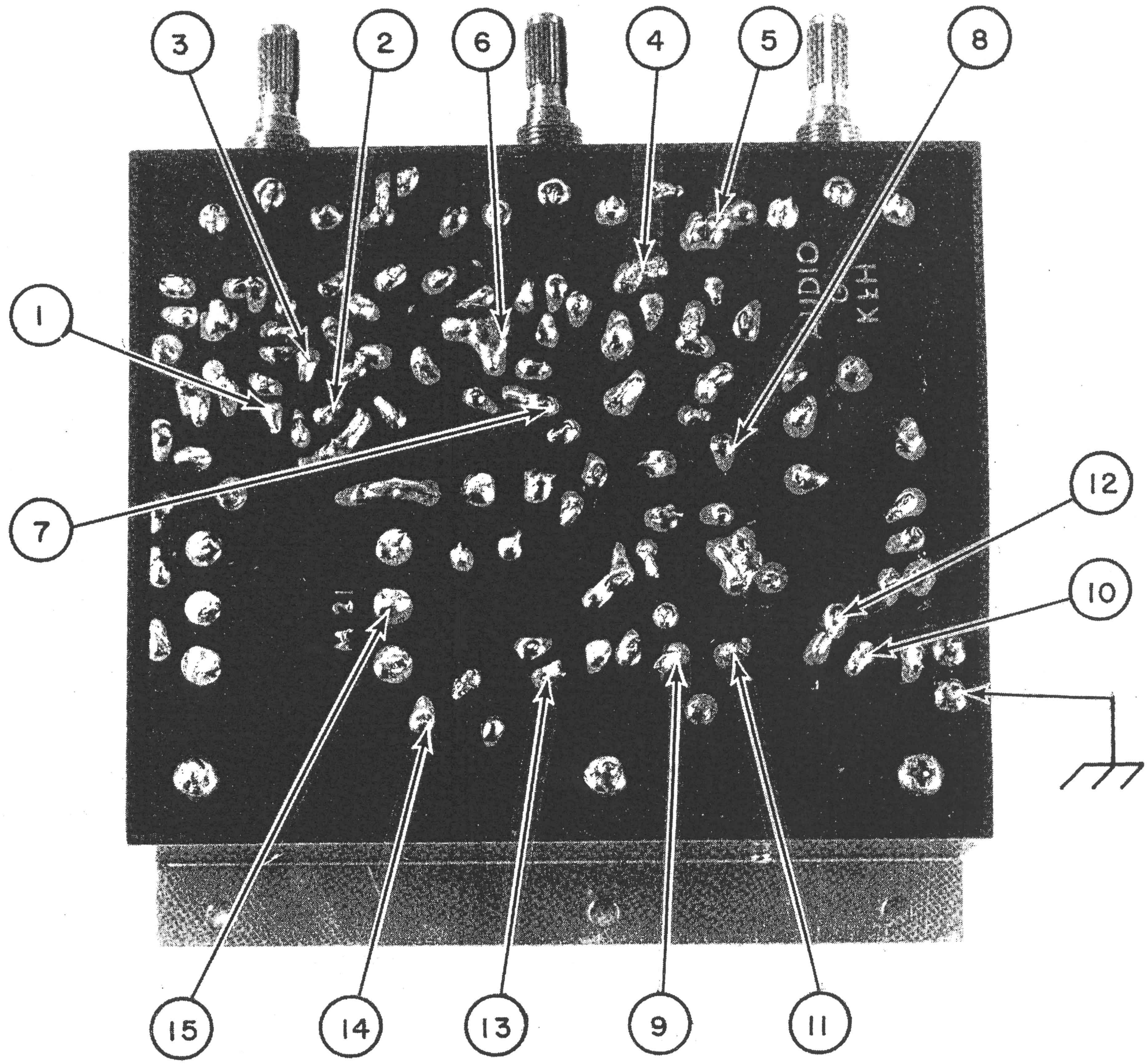

M-21 AUDIO AMPLIFIER BOARD

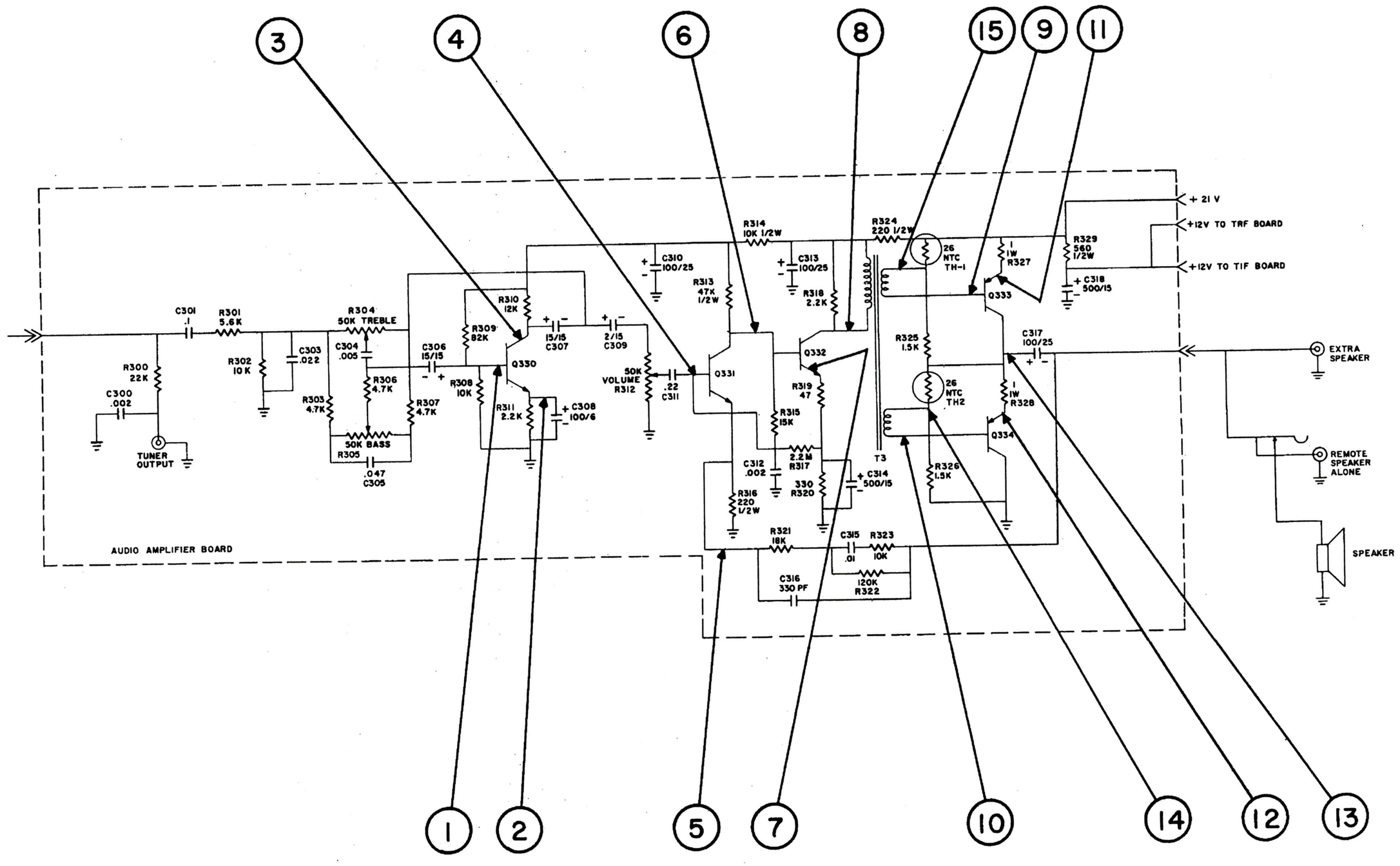

M-21 POWER SUPPLY

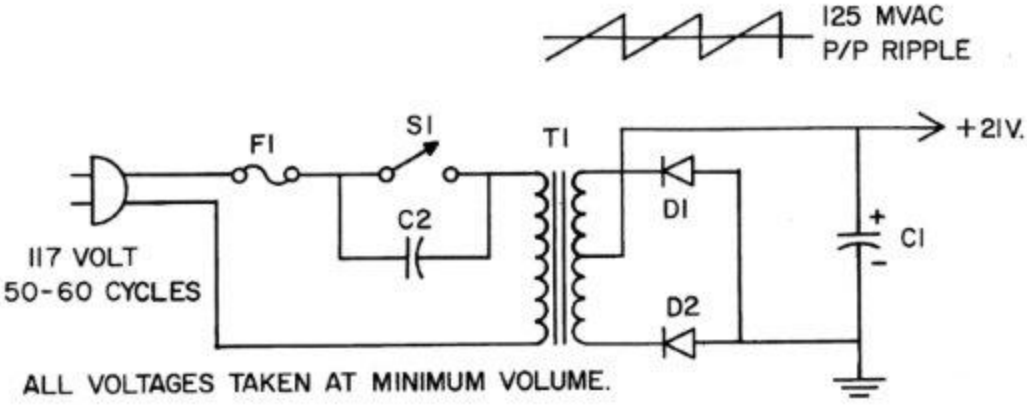

ALL VOLTAGES TAKEN AT MINIMUM VOLUME.

F1 = 1/4 AMP. SLOW BLOW FUSE.
S1 = OFF-ON (VOLUME).
C1 = 2000 μF / 30 VOLT.
C2 = .005 μF / 1400 VOLT (U.L.).
D1 & D2 = 1N2859.
T1 = KLH PART NO. E01093.

T1	PRIMARY	SECONDARY
RES.	100 Ω	2.75 Ω EITHER SIDE OF C.T.
VOLTS	117 V.AC.	16 V.AC. EITHER SIDE OF C.T.

B+ CURRENT DRAIN

IDLE: 12 MA. (MIN. VOL).
FULL OUTPUT BEFORE CLIPPING: 180-250 MA.

1N2859 PIV	100 V.
MAX. FORWARD I	500 MA.
TIF CURRENT:	5.5 MA.
TRF CURRENT:	3.8 MA.

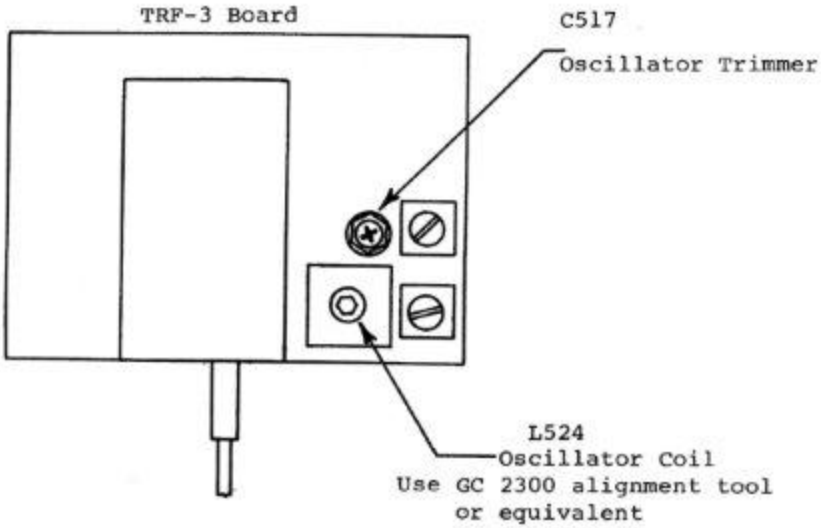

1.) Tune in an FM station @ approximately 92MC on the dial. If dial indication error exceeds 300Kc adjust the Oscillator coil L524 to correct dial.

2.) Now tune in an FM station in the 105 Mc to 108 Mc range. If dial indicator is erroneous, set dial to 2 TIMES THE ERROR - IN THE OPPOSITE DIRECTION.

I.E. (If reading is 500Kc high set dial 1Mc low or if dial is 500 Kc low set dial 1Mc HIGH). Adjust Oscillator Trimmer C517 to receive station at new setting.

3.) Recheck station @ approximately 92MC - correct with oscillator coil.

4.) Recheck and repeat if necessary.

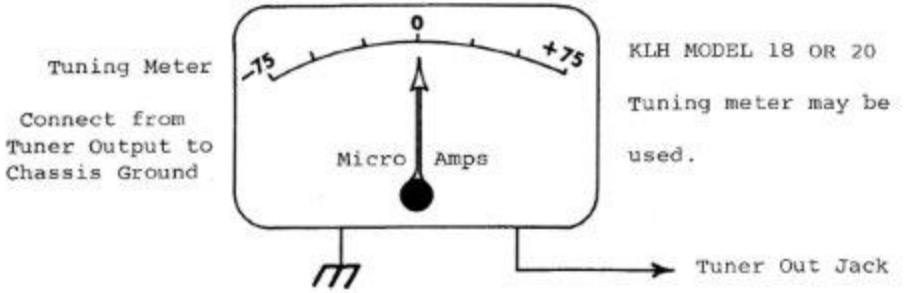

Special Balun Box for matching RF Signal Generator To Model 21

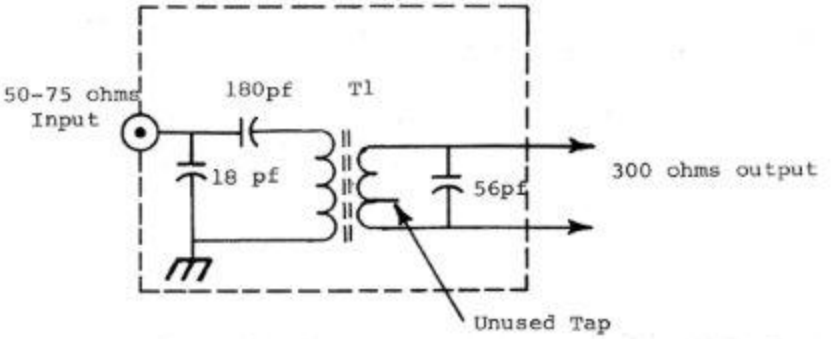

T1 KLH Balun coil used in Models 18 and 20.

DIAGRAM NUMBER	KLH CAT. #	KLH PART #
T1	0031	000057

MODEL TWENTY-ONE

I.F. AND FRONT END ALIGNMENT CHART (TIF-2 AND TRF-3)

1 Before aligning, calibrate dial as outlined previously.

	R.F. Signal Generator Settings				Tuner		
Step	Coupling	Frequency	Modulation	R.F. Output In Microvolts	Switches and Dial Setting	Monitor	Adjustments and Indication
2	50 or 75 ohm unbal to TIF-2 input	10.7 mc crystal osc.	none	1000 micro-volts or more	Point of no interference from local broadcasts	To tuner jack	Adjust secondary of ratio detector L607 to zero center of the tuning meter
3	50 or 75 ohm unbal to special balun box to antenna input. Balun shown on previous page	approx. 100 MC	400 c/s ± 75 KC deviation	Decrease R.F. output until noise appears in the output signal	Tune in the selected gen. freq. to zero center of the tuning meter	Output of the I. F. amp at test point "A" output with scope and A.C. Voltmeter	Adjust L522, L523, L600 thru L605 for max. output. L606 is factory adjusted for minimum harmonic distortion of the I.F. and should not be touched unless proper equipment is available. Decrease the signal gen. output further and retouch these same transformers for max. output and symmetrical noise. Be sure the tuning meter indicates zero center at all times.
4		Point of no interference from local broadcasts around 92mc	"	"	"	"	Adjust L520, L521 for maximum output and symmetrical noise

I. F. AND FRONT END ALIGNMENT CHART (TIF-2 AND TRF-3)

Step	R. F. Signal Generator Settings				Tuner Switches and Dial Setting	Monitor	Adjustments and Indication
	Coupling	Frequency	Modulation	R.F. Output In Microvolts			
5	300 ohm	Point of no interference from local broadcasts around 105 mc	400 c/s ± 75 Kc deviation	Decrease R.F. output until noise appears in the output signal	Tune in the selected gen. freq. to zero center of the tuning meter	Output of the I.F. amp at test point "A" with scope and A.C. voltmeter	Adjust antenna trimmer and mixer trimmer maximum output and symmetrical noise. Repeat steps 3 and 4 until no further improvements can be made and limiting occurs at approximately the same level.
6	"	"	"	10 Microvolts	"	"	Overall check if necessary. Repeat step 3 to achieve final sensitivity

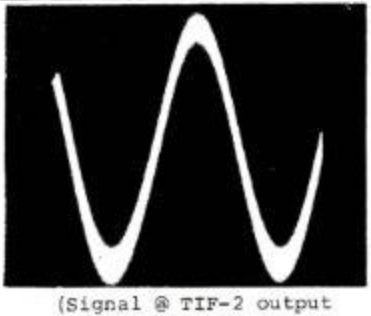

(Signal @ TIF-2 output just below limiting) with TIF-2 properly aligned.

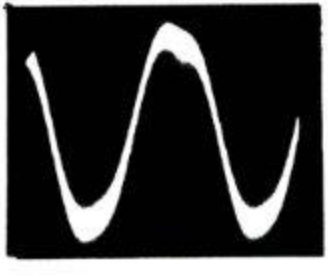

(Same as 1) with TIF-2 slightly misaligned resulting in improper bandpass, and reduced sensitivity.

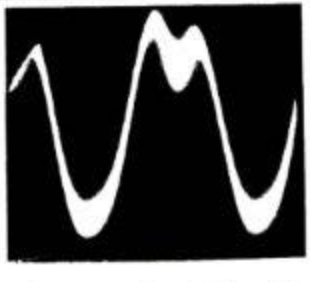

(Same as 1 and 2) with TIF-2 badly misaligned resulting in very poor bandpass, and greatly reduced sensitivity.

MODEL TWENTY-ONE

PARTS LIST

PLEASE USE KLH CATEGORY AND KLH PARTS NUMBERS WHEN ORDERING REPLACEMENT PARTS FROM THE FACTORY.

SPECIFY KEY NUMBER OF PC BOARD (TRF3A, TRF3B ETC.) TO INSURE CORRECT REPLACEMENT.

TRANSISTOR MFRS.
TI = TEXAS INSTRUMENTS
M = MOTOROLA
A = AMPEREX
GE = GENERAL ELEC.

	SCHEMATIC NUMBER	KLH CAT.#	KLH PART #	DESCRIPTION
TRF-3	Q520	0131	001182	TIM01, TIM10, M2N3286
	Q521	0131	001182	TIM02, TIM11, M2N3286
	Q522	0131	000861	TIM03, TIM11
TIF-2	Q600 to	0131	000802	TI403
	Q602	0131	001214	M2N3324
	Q603	0131	000802	TI403
AUDIO AMPLIFIER M-21	Q330	0131	000473	TI2N3710
	Q332	0131	000473	GE2N3392
	Q331	0131	000096	TI2N3707 OR GE2N3391A
	Q333	0131	001050	A2N2431
TRF-3				
CAPACITORS:	C500	0019	000853	1.0PF, 10% Fixed Ceramic
	C515	0019	000853	1.0PF, 10% Fixed Ceramic
	C507	0019	000215	680PF, 20% 100V Fixed Ceramic
	C508	0019	000854	12PF, 5% N330 Fixed Ceramic

		SCHEMATIC NUMBER	KLH CAT.#	KLH PART #	DESCRIPTION
CAPACITORS:		C501	0019	000854	12PF, 5% N330 Fixed Ceramic
		C503	0025	000771	2 to 14PF, Part of
		C509			Variable Capacitor Assembly
		C504	0019	005203	2.2PF, 10T Fixed Ceramic
		C510	0019	005203	2.2PF, 10% Fixed Ceramic
		C511	0019	000499	180PF, 10% Fixed Ceramic
		C518	0019	000499	180PF, 10% Fixed Ceramic
		C512	0019	000422	4.7PF, 10% Fixed Ceramic
		C517	0026	000842	2-6PF, N220 Ceramic Trimmer Tube
		C519	0019	000885	16PF, 5% N330 Fixed Ceramic
C502	C505	C506	0019	000034	.01MFD, 20% 100V Fixed Ceramic
C513	C520	C521	0019	000034	.01MFD, 20% 100V Fixed Ceramic
		C522	0019	000036	.01MFD, +80%-20% Fixed Ceramic
COILS AND TRANSFORMERS:					
		* L522	0032	000778	10.7 mc I.F. Transformer (Black Slug)
		* L523	0032	000779	10.7 mc I.F. Transformer (Red Slug)

TRF-3

	SCHEMATIC NUMBER	KLH CAT.#	KLH PART #	DESCRIPTION
COILS AND TRANSFORMERS: (Continued)	* L500	0031	000437	R.F. Choke
	* L525	0031	A-23111	Coil, Fixed
	* L520	0031	000843	TRF - Antenna Coil
	* L521	0031	000845	TRF - Mixer Coil
	* L524	0031	000846	TRF - OSC Coil

TIF-2

CAPACITORS:

C600	C602	C603			
C604	C607	C608			
C611	C612	C615			
		C616	0019	0034	.01 MFD, 20% 100V Ceramic Disc
	C619	C618	0019	499	180 PF, 10%
C605	C609	C612	0019		CN (Neutralizing Capacitors) Refer to Schematic - TIF-2 Board Section - For Proper CN value in conjunction with transistor used.
		C620	0015	00800	2 MFD, 15V Miniature Electrolytic
		C617	0019	001086	820 PF, 20% Ceramic, Fixed

COILS AND TRANSFORMERS:

* L609	0031	000495	R.F. Choke
* L619	0031	000495	

COILS AND TRANSFORMERS:
(Continued)

SCHEMATIC	KLH CAT.#	KLH PART #	DESCRIPTION
* L600	0038	000778	10.7 MC, IF Coil
* L602	0038	000778	10.7 MC, IF Coil
* L604	0038	000778	10.7 MC, IF Coil
* L601	0038	000780	10.7 MC, IF Coil
* L603	0038	000780	10.7 MC, IF Coil
* L605	0038	000779	10.7 MC, IF Coil
* L606	0038	000781	10.7 MC, IF Coil
* L607	0038	000782	10.7 MC, IF Coil

AUDIO AMPLIFIER BOARD

CAPACITORS:

C300	0019	001061	.002 MFD, 10% 1000V Ceramic Disc
C312	0019	001061	.002 MFD, 10% 1000V
C303	0017	000818	.022 MFD, 10% 100V Mylar
C301	0017	001087	.1 MFD, 20% 100V Mylar
C304	0019	000045	.005 MFD, 20% 50V Ceramic Disc
C305	0017	001101	.047 MFD, 20% 100V Mylar
C306	0015	000783	15 MFD, 15V Electrolytic
C307	0015	000783	15 MFD, 15V Electrolytic
C308	0015	000785	100 MFD, 6V Electrolytic
C309	0015	000800	2 MFD, 15V Electrolytic
C311	0017	000818	.22 MFD, 100V 10% Mylar

AUDIO AMPLIFIER BOARD

	SCHEMATIC NUMBER	KLH CAT.#	KLH PART #	DESCRIPTION
CAPACITORS: (Continued) C317 C310	C313	0015	000338	100 MFD, 25V Electrolytic
C314	C318	0015	000513	500 MFD, 15V Electrolytic
	C315	0019	000034	.01 MFD, 100V 20% Ceramic Disc
	C316	0019	000041	330 PF, 500V 10% Ceramic Disc

POWER SUPPLY

CAPACITORS:	C2	0019	001067	.005 MFD, 1400V + 80% - 20%
	C3	0019	000788	330 PF, 1400V + 80% - 20%
	C1	0015	000046	2000 MFD, 30V Electrolytic
POWER RECTIFIERS:	D1, D2	0135	000193	IN2859 Silicon Rectifier
POWER TRANSFORMER:	* T1		E01093	Model Twenty One Power Transformer
FUSE	F1	0180	001105	¼ AMP Slo-Blo, Pigtail Type

* Parts available only from KLH

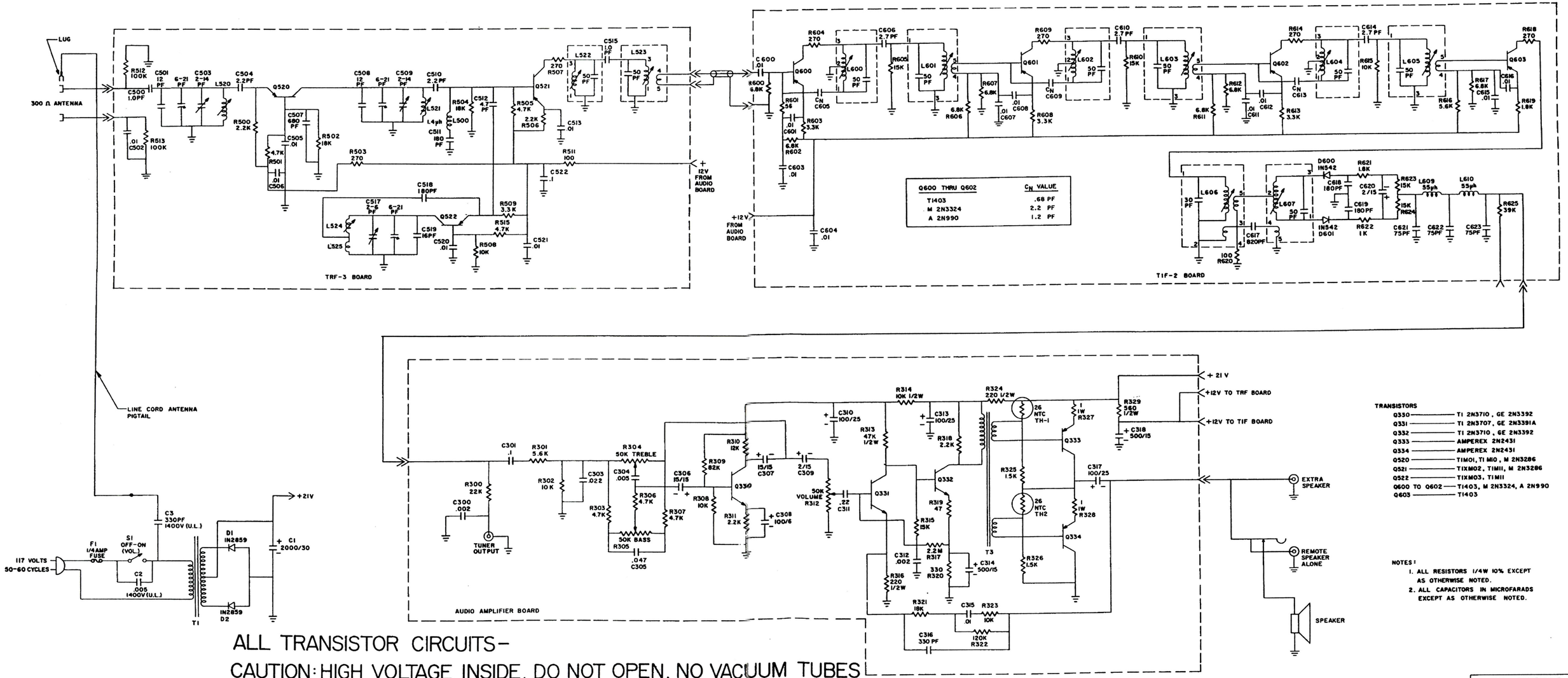

TRANSISTORS

Q330	TI 2N3710, GE 2N3392
Q331	TI 2N3707, GE 2N3391A
Q332	TI 2N3710, GE 2N3392
Q333	AMPEREX 2N2431
Q334	AMPEREX 2N2431
Q520	TIM01, TI M10, M 2N3286
Q521	TIXM02, TIM11, M 2N3286
Q522	TIXM03, TIM11
Q600 TO Q602	T1403, M 2N3324, A 2N990
Q603	T1403

NOTES:

1. ALL RESISTORS 1/4W 10% EXCEPT AS OTHERWISE NOTED.
2. ALL CAPACITORS IN MICROFARADS EXCEPT AS OTHERWISE NOTED.

ALL TRANSISTOR CIRCUITS-

CAUTION: HIGH VOLTAGE INSIDE. DO NOT OPEN. NO VACUUM TUBES OR OTHER USER SERVICEABLE PARTS INSIDE.

REFER SERVICING TO QUALIFIED SERVICE PERSONNEL.

117 VOLTS 50-60 CYCLES AC ONLY 7.5 WATTS

MODEL TWENTY-ONE
FM RECEIVING SYSTEM
KLH RESEARCH & DEVELOPMENT CORPORATION
CAMBRIDGE, MASS.

REV. B
10-3-66