THE LINN AXIS TURNTABLE

REV.	ALTERATIONS	DATE	INIT.
6	CHGD MECH 029 TO MECH 028/2. AXPLINTH/2 TO AXPLINTH/3. BASK PLUS TO AKITO/1 REVISED NOTES RE NOT SUPPLYING ARM COMPONENTS.	12JUL89	JNA
7	ADD ITEMS 66, 67, 68, & 69 (SUPPLIED WITH AR40. FINISH ON SCREWS, ITEMS 9, 39, 41, 62, & 63 CHANGE FROM BLACK TO ZINC & BLACK PASSIVATE. FOR /N PART NOS. ITEMS 59 & 63 PACKED IN TOP TRAY. ADD TO SPECIAL ORDER ONLY COLUMN TO TABLE.	13OCT89	JC
8	IN TABLE MOVE AUSTRIA & FINLAND FROM AXIS/240-013 COLUMN TO AXIS/240-013/N COLUMN. DECREASE QTY. ITEM 9 FROM 29 TO 27 & INCREASE QTY. ITEM 41 FROM 1 TO 3.	19OCT89	JC
9	NOTE 5 ADDED, NOTE 4 REVISED WITH DETAILS OF ARM-RELATED PARTS. LINN MAG2 REMOVED. CHGD 1F-024 TO TAPE 002. CHGD MECH 029/2 TO CONN 100/A (SUB-ASSY) REMOVED PACK 069. ADDED EARTHWIRE NOTE LOC(F5) ARM LOCKING SCREW REDRAWN TO CURRENT SPEC. ADDED PART NO. AXIS/240-015/N.. REMOVED 1F-028	15JUN90	NM
10	REMOVED 1P-071. GROUPED 2P-060/1 PACK 030. (PLAT/AXIS/F, OPLAT/AXIS/F TO FORM MCP231 ADDED 1P-061 TO MCP231	20AUG90	NM
11	REPLACED CONN 066 WITH CONN 158/1 IN THE CONN 071 ASSY. REDUCED THE QTY. OF 2C-059 FROM 5 TO 2.	16JAN91	JW

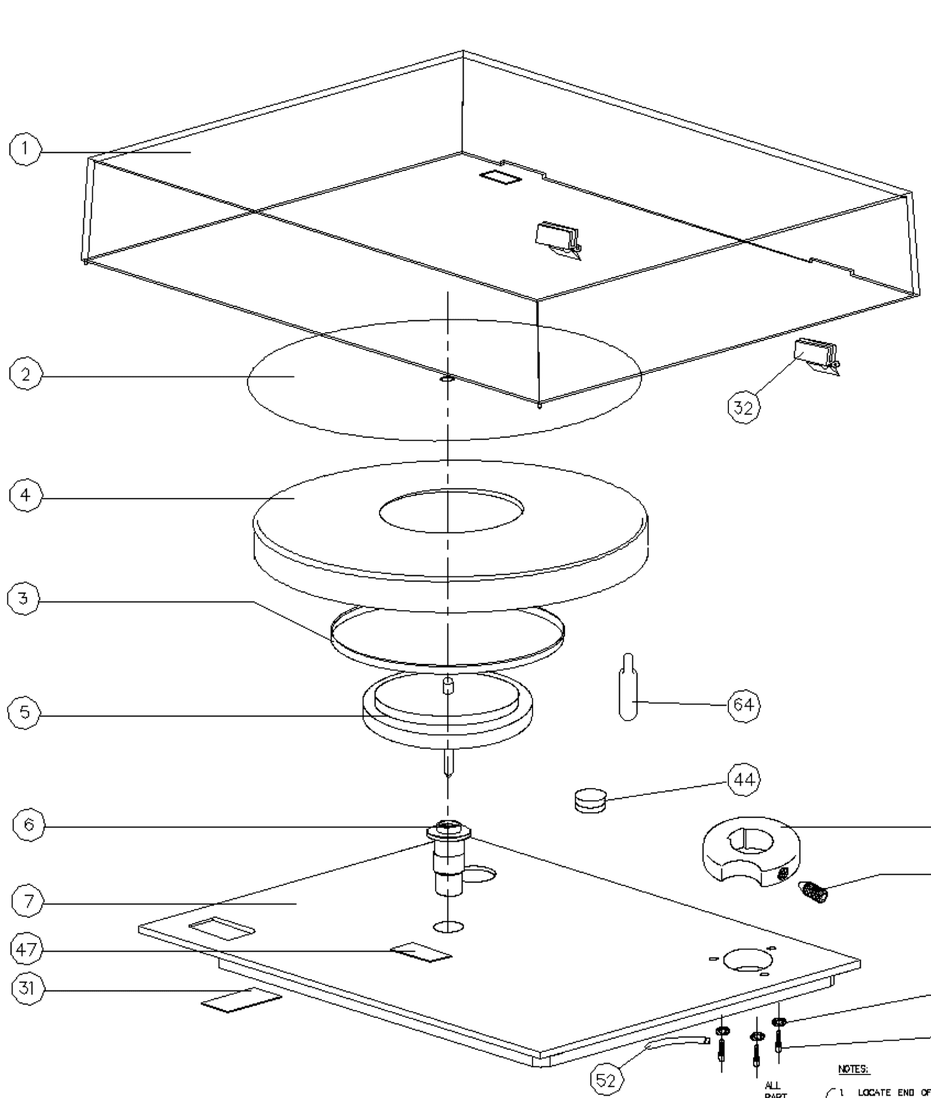

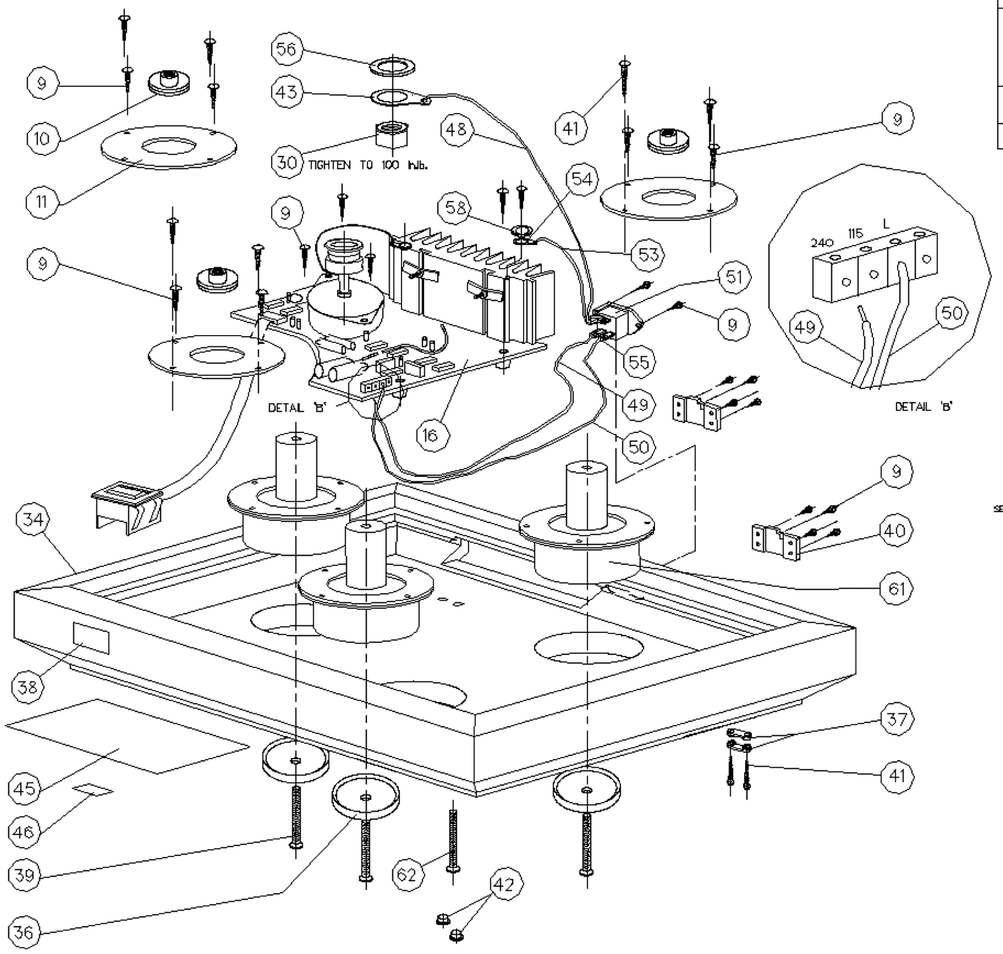

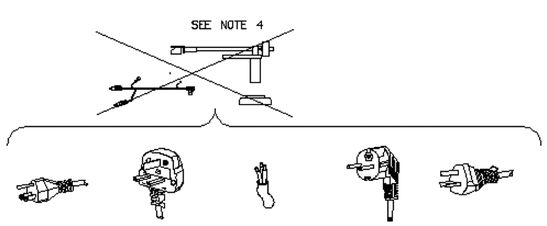

ALL PART NUMBERS:

NOTES:

1. LOCATE END OF CABLE ITEM 48 IN 115 OR 240.
2. MAINS LEAD TO BE PACKED IN PACK 158/1 BAG.
3. FLEXIBLE PCB TO BE ATTACHED TO TOP BOARD WITH STICKY TAPE, MSS 142.
4. FOR PART NOS AXIS/—.../N (NO ARM FITTED DECKS), PARTS 58, 63, 65-69 ARE NOT SUPPLIED.
5. FOR PART NOS AXIS/240-011, AXIS/240-011/N, THERE IS NO PACK 024 (OUTER BOX) AND 0.016xTAPE 002 IS USED.

PART NO AXIS/115-014/N	PART NO AXIS/240-011/N	PART NO AXIS/240-062/N	PART NO AXIS/240-013/N	PART NO AXIS/240-015/N	PART NO AXIS/240-013		PART NO AXIS/240-014	PART NO AXIS/115-014	PART NO AXIS/240-015	PART NO AXIS/240-011
JAPAN	TO	SWITZERLAND	ITALY	NEW ZEALAND	FRANCE	PORTUGAL	HONG KONG	AMERICA	NEW ZEALAND	UK
	SPECIAL	ISRAEL	BELGIUM	AUSTRALIA	GERMANY	TURKEY	THAILAND	TAIWAN	AUSTRALIA	SINGAPORE
	ORDER	SOUTH AFRICA	SPAIN		SWEDEN	DENMARK		KOREA		EIRE
	ONLY		GREECE		ICELAND	NORWAY		SAUDI ARABIA		
			AUSTRIA		HOLLAND			CANADA		
			FINLAND							

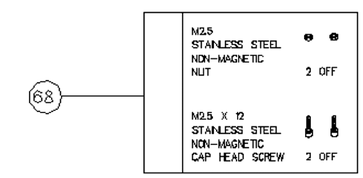

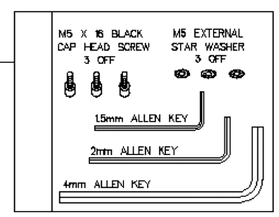

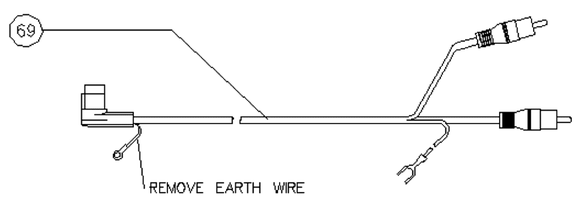

REMOVE EARTH WIRE
AT THIS END, AS CLOSE TO PLUG
AS POSSIBLE - USE SNIPS NOT SCISSORS.

	Item No	Description	No Off	Part No
		APMBOARD POLYPROP BAG 187 X 317 X 38 LIP	01	PACK 158/1
SEE NOTE 5		3 CLEAR VINYL TAPE WITH LINN LOGO	0.05 ROLL	TAPE 002
		1 SELLOTAPE	0.004 ROLL	1P-032
		ARM BOARD/INNER PLATTER BAG, 9 X 18/10 X 16.	01	1P-061
		LINN FRAGILE MECHSON INSTRUMENT LABEL.	01	2P-001/2
		LID/DECK BAG 889 X 789	01	1P-050
		MADE IN UK LABEL.	01	2B-008
		PRESS SEAL ENVELOPES (SMALL B.X.A)	01	1S-084
		LINN REGISTRATION CARDS.	01	1G-356
		CARDBOARD LAYER PAD 433 X 358.200K WALL	01	PACK 033
		AXIS INNER BOX.	01	PACK 032
		TURNTABLE SPACER/TOP SHEET 430 X 410 X 10MM.	01	PACK 028
		INTERMEDIATE SPACER (PACKAGING POLYSTYRENE REF 3428.	01	PACK 027
SEE NOTE 5		LP12/AXIS OUTER BOX 200K/200K WIDE X 450 X 360	01	PACK 024
		POLYSTYRENE TOP TRAY FOR USE IN T/TABLE REF 1014.	01	PACK 023
		MANUAL FOR AXIS.	01	PACK 022
		AKITO TONEARM	01	AKITO/1
SEE NOTE 4	69	ARM LEAD	01	34-378
	68	MINI-GRIP BAG FOR SCREWS, ETC.	02	
	67	HEIGHT LOCKING SCREW	01	
	66	ARM COLLAR	01	
	64	GELATINE CAPSULE.	01	PACK 082
SEE NOTE 4	63	M3 X 22MM CAP HEAD SCREW, ZINC & BLACK PASSIVATE	03	MECH 043
	62	M3 X 6G TRANSIT SCREW, POZI PAN ZINC & BLACK PASSIVATE	01	MECH 025
	61	BLACK SILICON FOOT WITH RING BONDED IN	03	MISS 043
SEE NOTE 4	59	M3 STAR SHAPED SHAKEPROOF WASHER CHEM BLACK.	03	MECH 042
	58	M3 INTERNAL SHAKEPROOF WASHER CHEM BLACK.	01	MECH 009
	56	DISC SPRING 40 X 20.4 X 1 DIN	01	MECH 037
	55	6.4MM HEATSHRINK SLEEVING 3x20MM LG.	0.06 M	MISS 067
	54	4 BA RING EARTH TAG	01	MISS 120
	53	YELLOW/GREEN CABLE CUT TO 85mm (16 AWG TRI-RATED CABLE	01	CONN 158/1
	52	SCREW MOUNTED CABLE TIE FOR AXIS 160MM LG.28MM WD 5X0-0.5SAL	01	MECH 038
CONN 071	51	PS80/TO BULGIN MAINS CONNECTOR FOR AXIS.	01	CONN 041
	50	0.5MM SQUARE TRI-RATED CABLE BROWN CUT To 165MM LENGTH.	01	CONN 067
	49	0.5MM SQUARE TRI-RATED CABLE COLOUR BLUE CUT TO 180MM LENGTH.	01	CONN 055
	48	YELLOW/GREEN CABLE CUT TO 250MM LENGTH.	01	CONN 065
	47	SELF ADHESIVE PLATTER WARNING LABELS.	01	2B-090
	46	SERIAL NUMBER LABEL FOR AXIS 24MM X 7.5MM.	01	PACK 021
	45	AXIS BOTTOM BADGE (GSA APPROVED TYPE)	01	PACK 125/2
	44	BEARING HOLDING CAP PART AXB15042 BLACK TRD 3/4 X 16 SWG.	01	MISS 042
	43	20MM SOLID BRASS EARTH TAG NAT.TSK.	01	MISS 041
	42	ARMBOARD PLUG BLACK (2/80) 6MM.	02	2C-059
	41	NO.8 X 3/4 POZI PAN SELF TAPPER TYPE AB SCREW, ZINC & BLACK PASSIVATE	03	1F-013
	40	HINGE BACK PLATES (K-1850).	02	2F-037/B
	39	M3 X 4B PAN HEAD,POZI-DRIVE SCREW, ZINC & BLACK PASSIVATE.	03	MECH 020
	38	SPEED CHANGE INSTRUCTION LABEL CLEAR VINYL 40MM X 30MM.	01	PACK 026
	37	BLACK MAINS WIRE CLAMP.	02	2E-015
	36	PLASTIC RETAINER FOR AXIS FOOT	03	MISS 063
	35	MAINS LEAD	01	SEE TABLE A
	34	BLACK VINYL PLINTH FOR AXIS.	01	AXPLINTH/3
	32	HINGES FOR LP12 (K1848).	02	2F-037/H
	31	DOUBLE-SIDED STICKY TAPE	01	MISS 142
	30	M30 HALF NUT 16MM PITCH BLACK OXIDISED.	01	MECH 024
	18	AXIS CIRCUIT BOARD ASSY.	01	PCAS 011
	11	ALUMINIUM SIC RING 2MM THK (3.35MM.ID) 30MM(SCREWS ON TOP).	03	MISS 040
	10	ASSEMBLED TAPE AND BEARING NUT FOR AXIS (TAPE IS CONN 100/A)	03	CONN 100/A
	09	NO.8 X 1/2 SLEX PAN SELF TAPPER TYPE AB SCREW, ZINC & BLACK PASSIVATE	27	MECH 015
	07	TOP BOARD IN FLINT,TAMPO PRINTED.	01	TOP BOARD/3P
	06	FINISHED BEARING HOUSING COMPLETE WITH LINERS.	01	BH-004
MCP 231		LP12 POLYSTYRENE SKI TO HOLD INNER PLATTER.	01	2P 050-1
		POLYSTYRENE BOTTOM TRAY FOR USE IN T/TABLE REF 1048.	01	PACK 030
		ARM BOARD/INNER PLATTER BAG, 9 X 18/10 X 16.	01	1P-061
	05	FINISHED INNER PLATTER WITH SPINDLE (AXIS).	01	IPLAT/AXIS/F
	04	FINISHED OUTER PLATTER (AXIS).	01	OPLAT/AXIS/F
	03	DRIVE BELT USED IN LP12 TURNTABLE.	01	3C-050
	02	FELT MATS PRE-SHRUNK IN 5517 BLACK FOR AXIS & LP12.	01	2N-060
	01	FINISHED TURNTABLE LID WITH LID, FEET AND BADGE.	01	2C-074/F

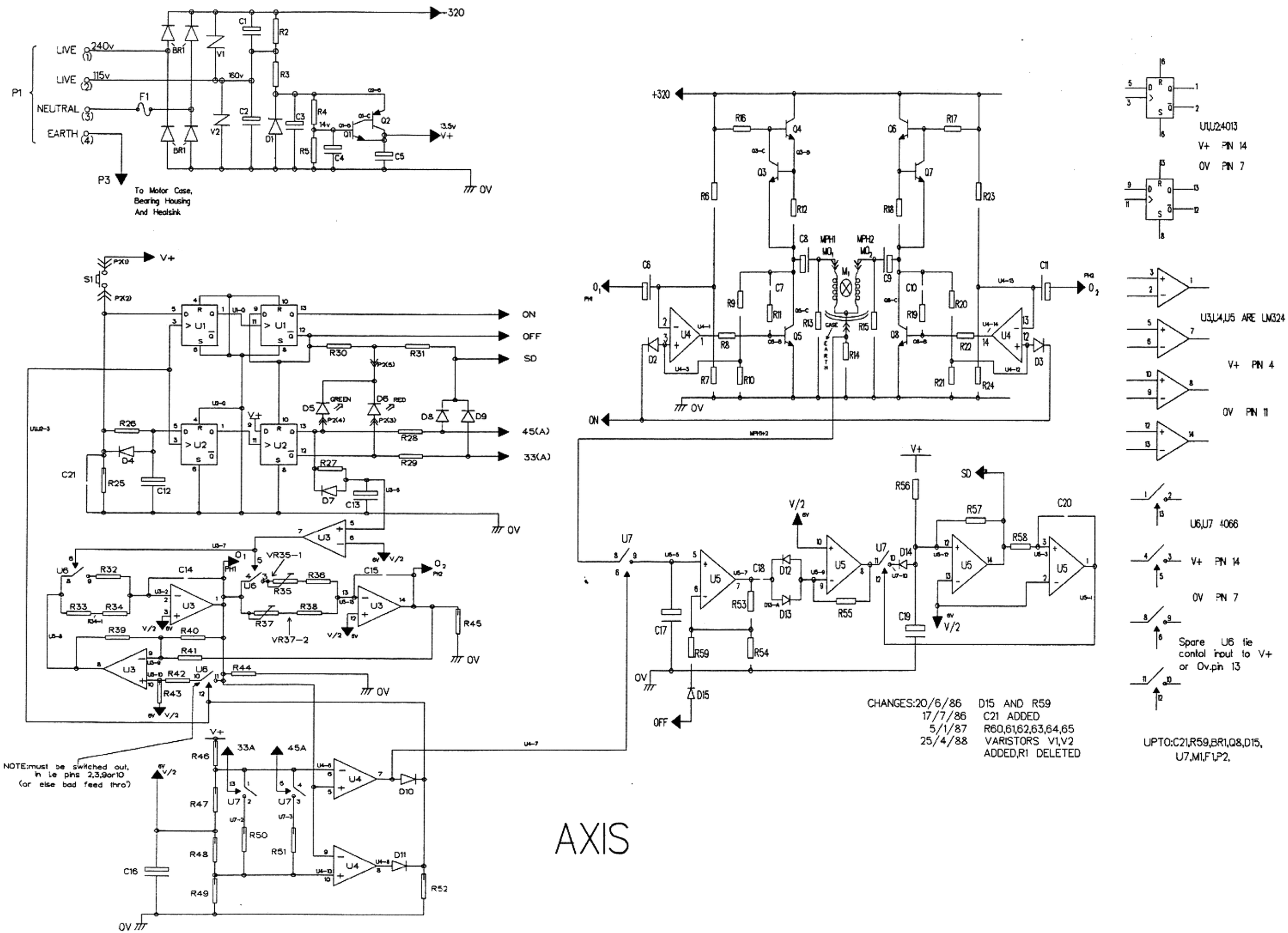
LIVE 240v (1)
LIVE 115v (2)
NEUTRAL (3)
EARTH (4)
P1
P3
F1
BR1
V1
V2
C1
C2
C3
C4
C5
R1
R2
R3
R4
R5
D1
Q1
Q2
320
160v
14v
13.5v
V+
0V
To Motor Case, Bearing Housing And Heatsink
S1
P2(1)
P2(2)
U1
ON
OFF
SD
R30
R31
D5 GREEN
D6 RED
D8
D9
R26
R25
D4
C21
C12
U2
R27
R28
R29
D7
C13
45(A)
33(A)
U3
VR35-1
R35
R36
R37
R38
VR37-2
C14
C15
R32
R33
R34
R39
R40
R41
R42
R43
R44
R45
U6
O1
O2
PH1
PH2
V/2
NOTE:must be switched out, in ie pins 2,3,9or10 (or else bad feed thro')
R46
R47
R48
R49
C16
33A
45A
U4
D10
D11
R50
R51
R52
+320
R16
R17
Q3
Q4
Q5
Q6
Q7
Q8
R6
R12
R18
R23
C8
C9
MPH1
MPH2
M1
C6
C11
C7
C10
R9
R11
R13
R15
R19
R20
R14
R8
R10
R22
R21
R24
R7
D2
D3
CASE
EARTH
U7
R56
R57
R58
C20
C17
C18
D12
D13
R53
R54
R55
D14
C19
R59
D15
U5
CHANGES:20/6/86 D15 AND R59
17/7/86 C21 ADDED
5/1/87 R60,61,62,63,64,65
25/4/88 VARISTORS V1,V2
ADDED,R1 DELETED
U1,U2 4013
V+ PIN 14
0V PIN 7
U3,U4,U5 ARE LM324
V+ PIN 4
0V PIN 11
U6,U7 4066
V+ PIN 14
0V PIN 7
Spare U6 tie contol input to V+ or 0v.pin 13
UPTO:C21,R59,BR1,Q8,D15, U7,M1,F1,P2,
AXIS