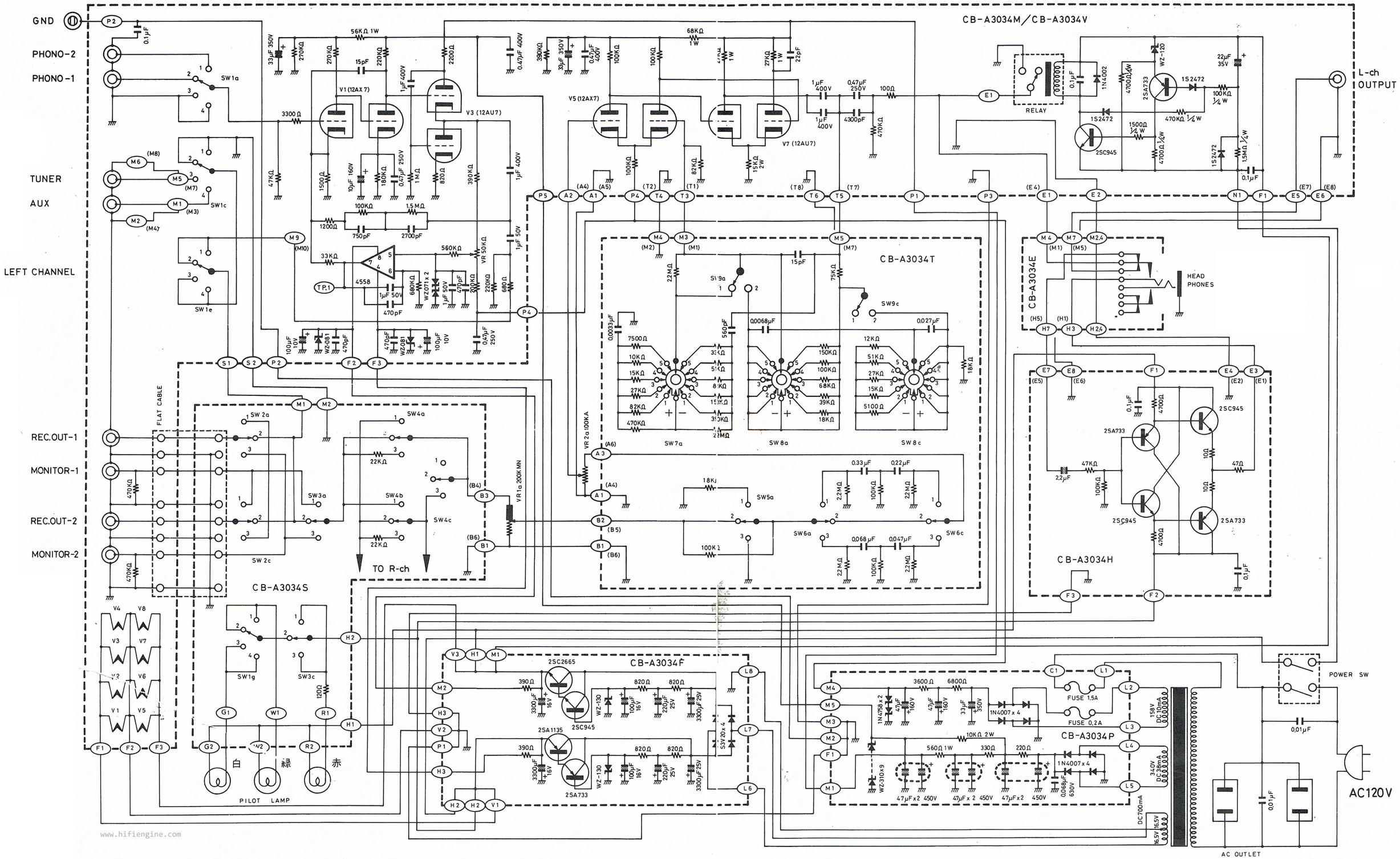


SWITCHES

SW 1 a, b, c, d, e, f, g, h ----- INPUT SELECTOR (1: Phono-2 2: Phono-1 3: Tuner 4: Aux)
SW 2 a, b, c, d ----- DUBBING (1: 1→2 2: Source 3: 2→1)
SW 3 a, b ----- MONITOR (1: Tape-1 2: Source 3: Tape-2)
SW 4 a, b, c ----- MODE (1: Reverse 2: Stereo 3: Mono)
SW 5 a, b ---------ATTENUATE (1: 20dB 2: Normal 3: Signal off)
SW 6 a, b, c, d ----- FILTER (1: Subsonic 2: Defeat 3: Low cut)
SW 7 a, b ---------TREBLE CONTROL
SW 8 a, b, c, d -----BASS CONTROL
SW 9 a, b ---------TONE DEFEAT (1: Defeat 2: Tone on)

VOLUMES

VR 1 a, b -------BALANCE CONTROL
VR 2 a, b -------VOLUME CONTROL

# STEREO PREAMPLIFIER CL 34