SERVICE MANUAL

LUXMAN STEREO CASSETTE DECK

K-118

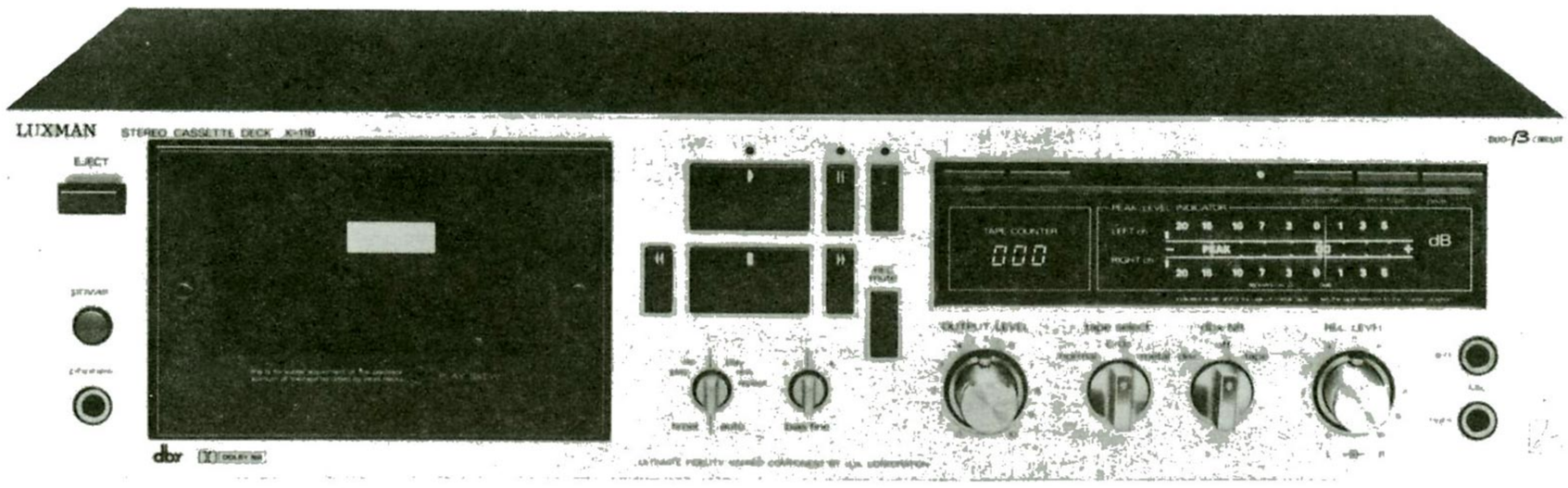

www.hifiengine.com

CONTENTS

Block Diagram 2
Adjustment Procedures . . . . . 3 ~ 5
Exploded View (1) Parts List . . . . . 6 · 7
Exploded View (2) Parts List . . . . . 8 · 9
Exploded View (3) Parts List 10
Master PCB Parts List . . . . . 11 ~ 14
dbx NR PCB Parts List . . . . . 14 · 15
Meter PCB Parts List 16
Control Supply PCB Parts List . . . . . 16 · 17
Switch PCB Parts List 18
Key Switch PCB Parts List 19
Fuse PCB Parts List 19
LED PCB Parts List 19
Control Signal Time Chart 20
Schematic Diagram (Audio) 21
Schematic Diagram (Control) 22
dbx Block Diagram 23
Specifications 23

CAUTION

The dbx switch works in preference to the Dolby NR switch. When the dbx switch is set at the "tape" or "disc" position, the Dolby NR circuit does not function even if the Dolby switch is turned on.

Block Diagram

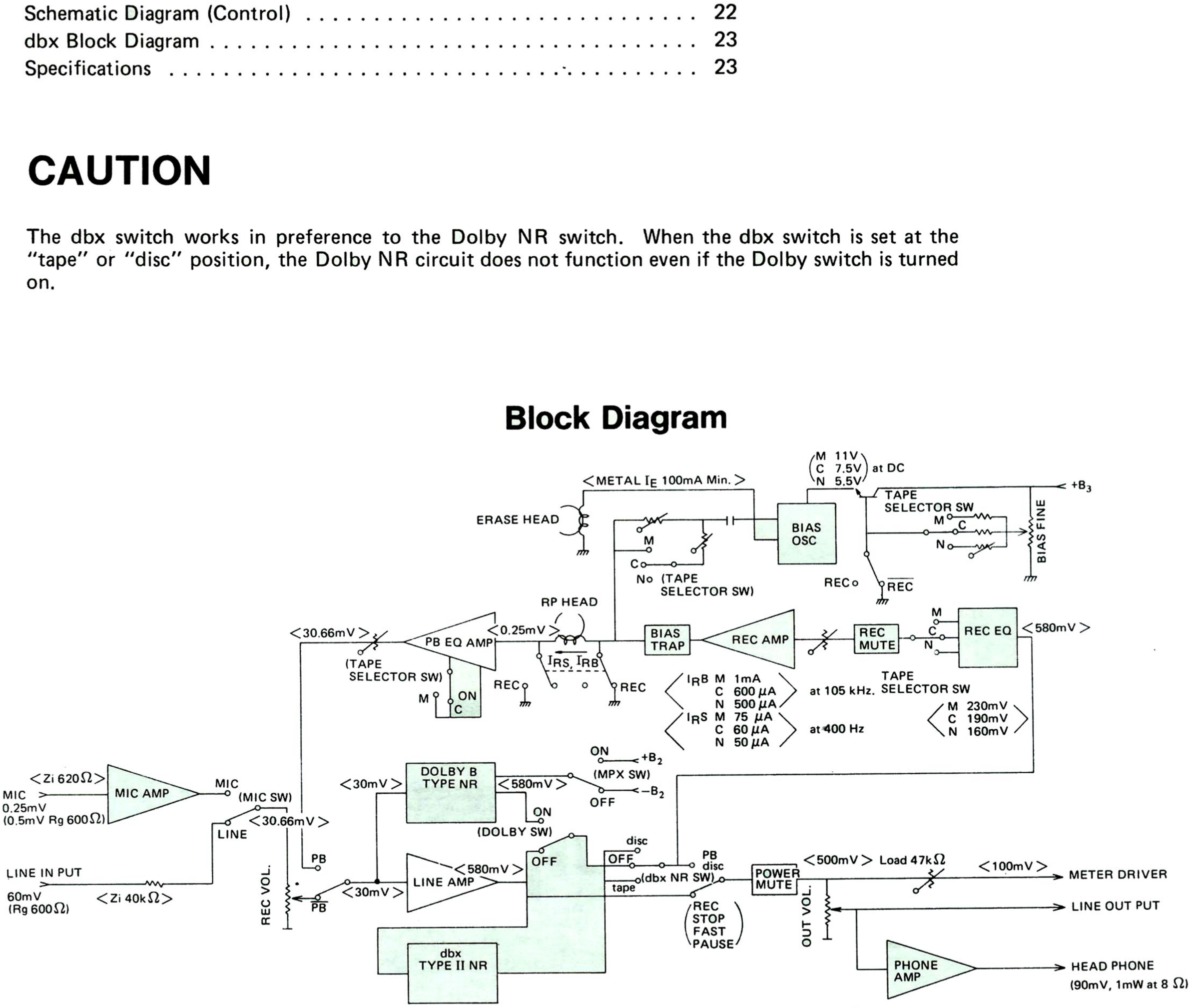

Remarks: disc works only at $\overline{\text{REC}}$, $\overline{\text{PB}}$

www.hifiengine.com

Adjustment Procedures

Step		Description	Mode	Adjusting Point	Test Point	Connection	Remarks
1		Transportation Check	Play			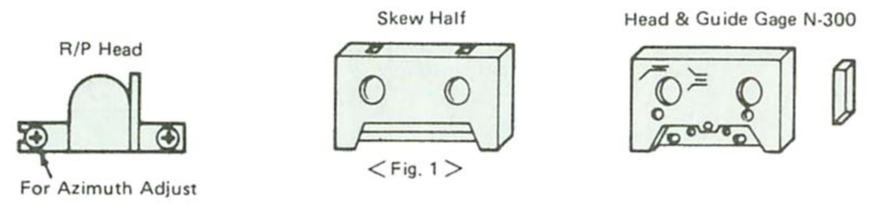	*Make sure that does not touch the tape guide of erase and R/P heads, by using "Skew Half". *Confirm that R/P head is placed without any tilt against the "M-300" gage.
2		Torque Check	Play, FF, REW			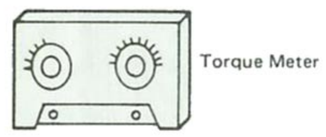	Take up : 35 ~ 60 gcm Torque Meter TW2111 Back Tension : 3 ~ 6 gcm Torque Meter TW2111 FF & REW : 70 ~ 130 gcm Torque Meter TW2231
3		Tape Speed & Wow Flutter Check	Playback	For Speed Adjust 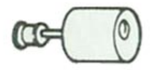	LINE OUT	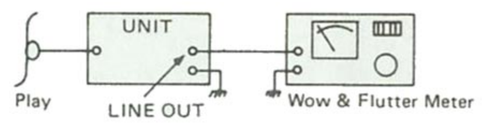	Test Tape : MTT-111 (3 KHz) Speed : 3000 Hz ± 1.5 % Wow & Flutter: 0.04 % (JIS WRMS)
4		Head Azimuth Adjustment	Playback	See <Fig. 1>	LINE OUT	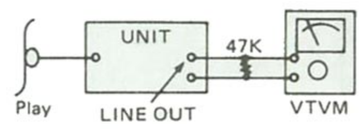	Test Tape : MTT-114 (10 KHz) LINE OUT : Maximum of both channel
5	A	Input Level Adjustment	Stop NR SW : OFF	EX OSC Level	TP17 TP20	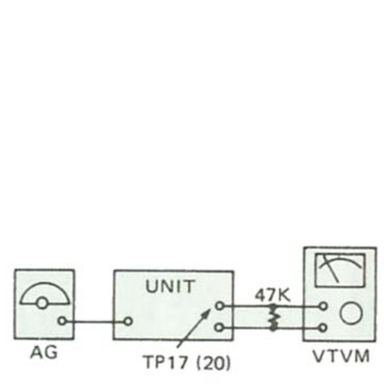	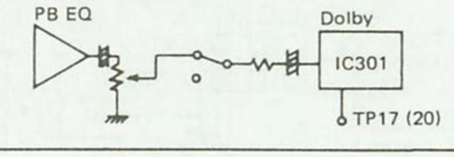 LINE IN : 400 Hz 64 mV ± 6 mV TP Output : 400 Hz 580 mV (LINE OUT): 400 Hz 500 mV ± 20 mV Meter : 0 dB dot
	B	FL Meter Adjustment		VR801a – Lch VR801b – Rch	Meter		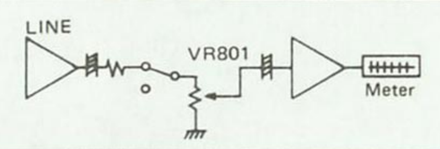
6	A	MPX. LPF 1 Adjustment	Stop Dolby MPX : ON	LF301a (WHT) – Lch LF301b (WHT) – Rch	TP17 TP20 TP20		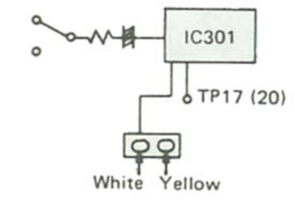 LINE IN : 19 KHz 64 mV ± 6 mV TP Output : Minimum
	B	MPX. LPF 2 Adjustment		LF301a (YEL) – Lch LF301b (YEL) – Rch	TP17 TP20		LINE IN : 105 KHz 64 mV ± 6 mV TP Output : Minimum
7	A	dbx R.M.S. Adjustment	Stop (Rec VR : Min) NR SW : OFF	EX OSC Level	TP30 TP31	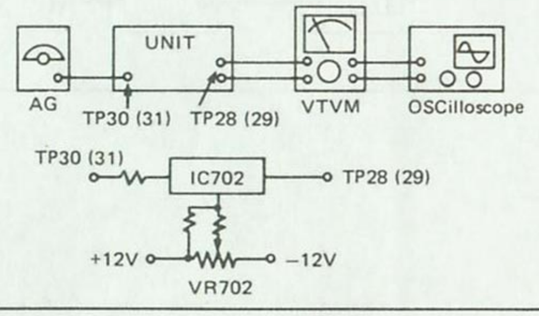	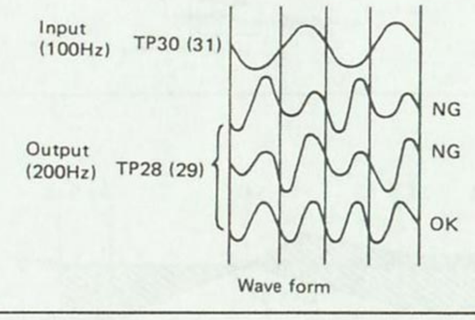 LINE IN : Non TP Input : 100 Hz 100 mV TP Output : Minimum 100 Hz
	B			VR702a – Lch VR702b – Rch	TP28 TP29		
8	A	dbx VCA Adjustment	Stop (Rec VR : Min) NR SW: OFF	EX OSC	CB752	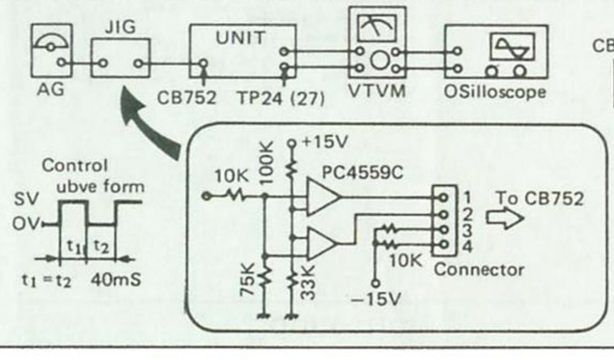	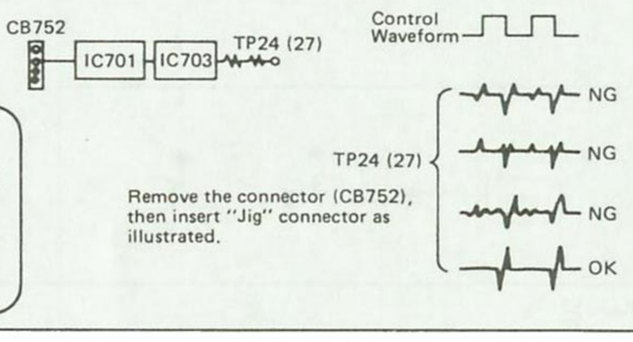 LINE IN : Non EX OSC : TP Output : Minimum DC Drift
	B			VR701a – Lch VR701b – Rch	TP24 TP27		

www.hifiengine.com

Step		Description	Mode	Adjusting Point	Test Point	Connection	Remarks	
9		Playback Level Adjustment	Playback Tape Select : Nor. NR SW : OFF	VR201a – Lch VR201b – Rch	TP17 TP20		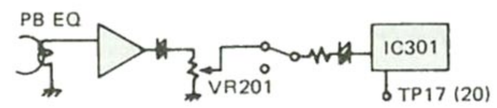	Test Tape : MTT-150 (400 Hz 200nwb/m) TP Output : 580 mV (LINE OUT : 500 mV ± 20 mV)
10	A	Playback Frequency Response Check	Playback Tape Select : Nor. NR SW : OFF	Repeat steps 1 ~ 5	LINE OUT	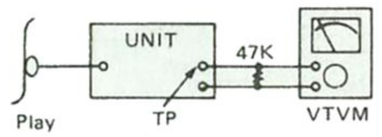	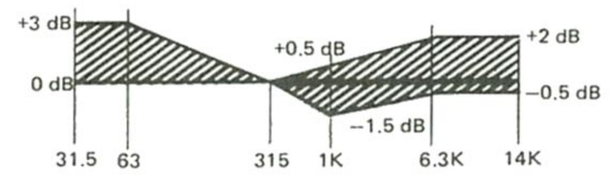	Test Tape : MTT-216
	B		Playback Tape Select : CrO_2 Metal NR SW : OFF					Test Tape : MTT-316
11		Bias OSC Frequency Adjustment	Rec Tape Select : CrO_2 NR SW : OFF	T501	TP4	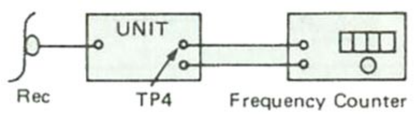	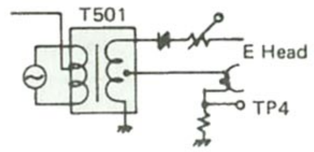	LINE IN : Non TP Output : 105 KHz ± 0.5 KHz
12		Rec Amp Bias Trap Adjustment	Rec Tape Select : CrO_2 NR SW : OFF	L502a – Lch L502b – Rch	TP8 TP9		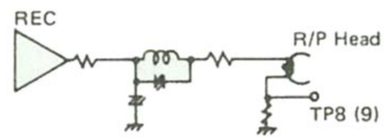	LINE IN : Non TP Output : Maximum
13	A	Bias Current Adjustment	Rec Tape Select : CrO_2 NR SW : OFF	VR553a – Lch VR553b – Rch	TP8 TP9			LINE IN : Non TP Output : 6 mV
	B		Rec Tape Select : Metal NR SW : OFF	VR554a – Lch VR554b – Rch		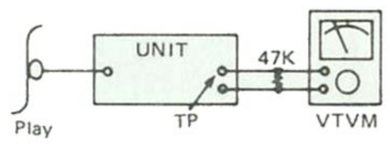	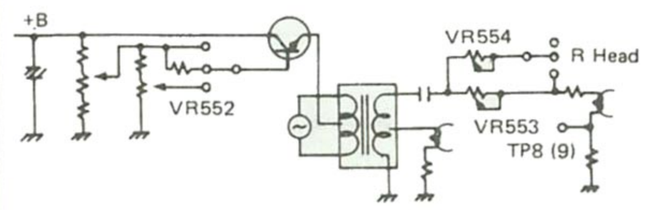	LINE IN : Non TP Output : 10 mV
	C		Rec Tape Select : Nor. NR SW : OFF	VR552 – L/Rch				LINE IN : Non TP Output : 5mV
14		Rec/PB Level Adjustment	Rec/PB Tape Select : CrO_2 NR SW : OFF	VR501a – Lch VR501b – Rch	TP17 TP20		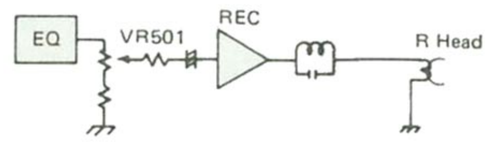	Rec Tape : AC512 LINE IN : 400 Hz 64 mV TP Output : 580 mV
15	A	Rec/PB Frequency Response Check	Rec/PB Tape Select : CrO_2 NR SW : OFF	Step 13–A	LINE OUT		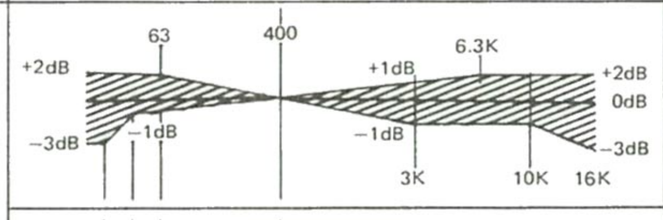	Rec Tape : AC512 LINE IN : 20 ~ 16 K 3.65 mV
	B		Rec/PB Tape Select : Metal NR SW : OFF	Step 13– B			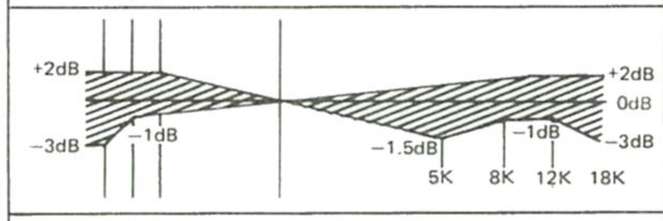	Rec Tape : AC711 LINE IN : 20 ~ 18 K : 3.65 mV
	C		Rec/PB Tape Select : Nor. NR SW : OFF	Step 13–C			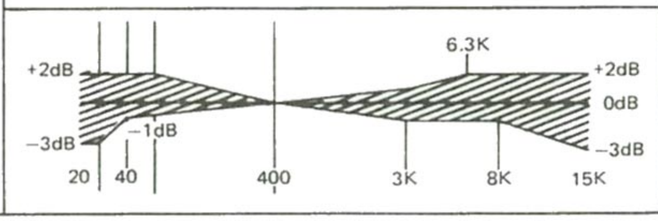	Rec Tape : AC223 LINE IN : 20 ~ 15 K 3.65 mV

www.hifiengine.com

Step		Description	Mode	Adjusting Point	Test Point	Connection	Remarks
16	A	Dolby Rec/PB Frequency Frequency Response Check	Rec/PB Tape Select : CrO_2 Dolby SW : ON			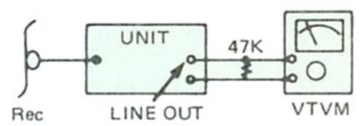	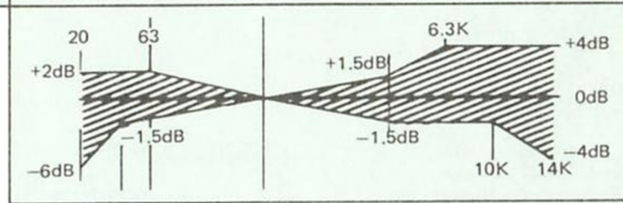	Rec Tape : AC512 LINE IN : 20 ~ 14 K 3.65 mV
	B		Rec/PB Tape Select : Metal Dolby SW : ON				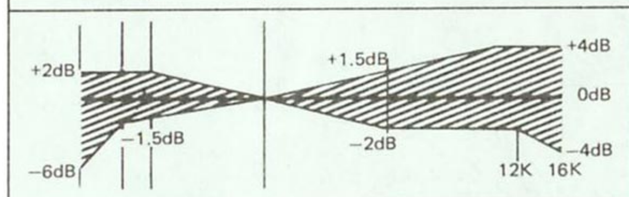	Rec Tape : AC7111 LINE IN : 20 ~ 16 K 3.65 mV
	C		Rec/PB Tape Select : Nor. Dolby SW : ON				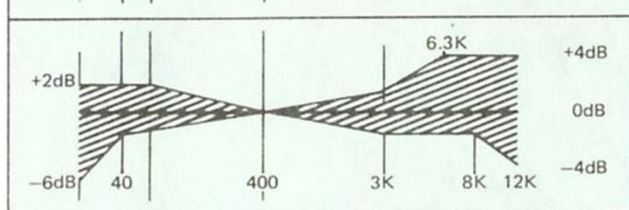	Rec Tape : AC223 LINE IN : 20 ~ 12 K 3.65 mV
17	A	dbx Rec/PB Frequency Response Check	Rec/PB Tape Select : CrO_2 dbx SW : Tape				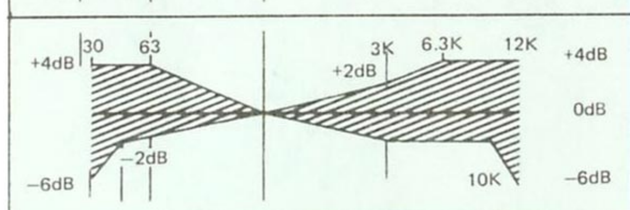	Rec Tape : AC512 LINE IN : 30 ~ 12 K 3.65 mV
	B		Rec/PB Tape Select : Metal dbx SW : Tape				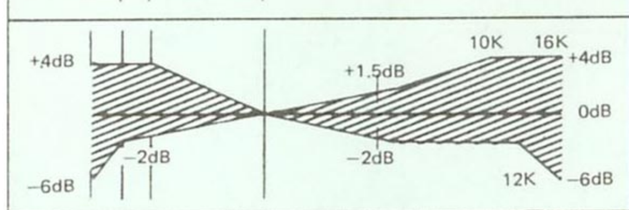	Rec Tape : AC711 LINE IN : 30 ~ 16 K 3.65 mV
	C		Rec/PB Tape Select : Nor. dbx SW : Tape				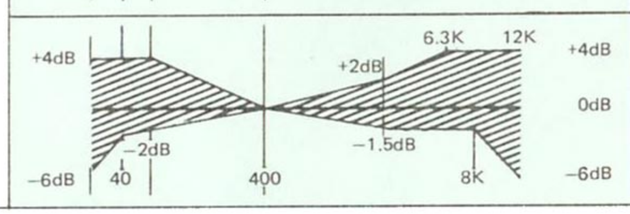	Rec Tape : AC223 LINE : 30 ~ 12 K 3.65 mV

Adjustment Locations

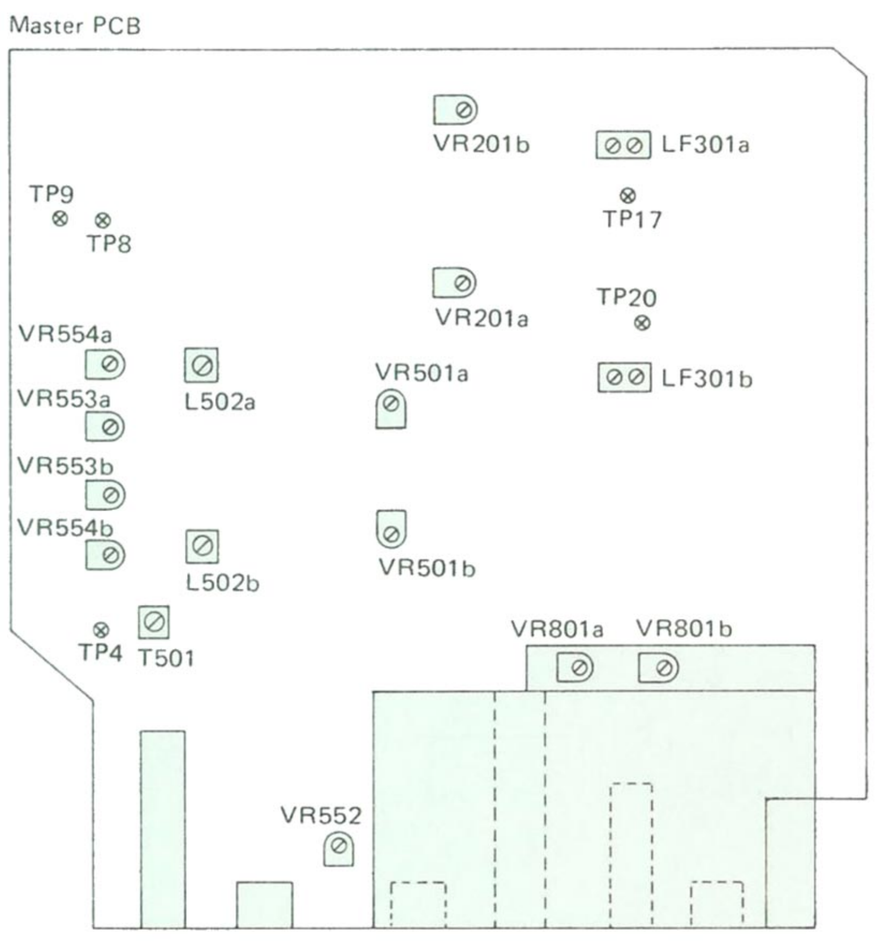

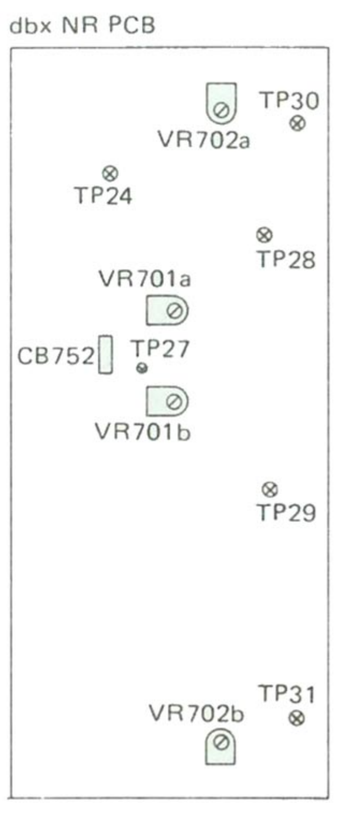

www.hifiengine.com

EXPLODED VIEW

K-118 EXPLODED VIEW (1)

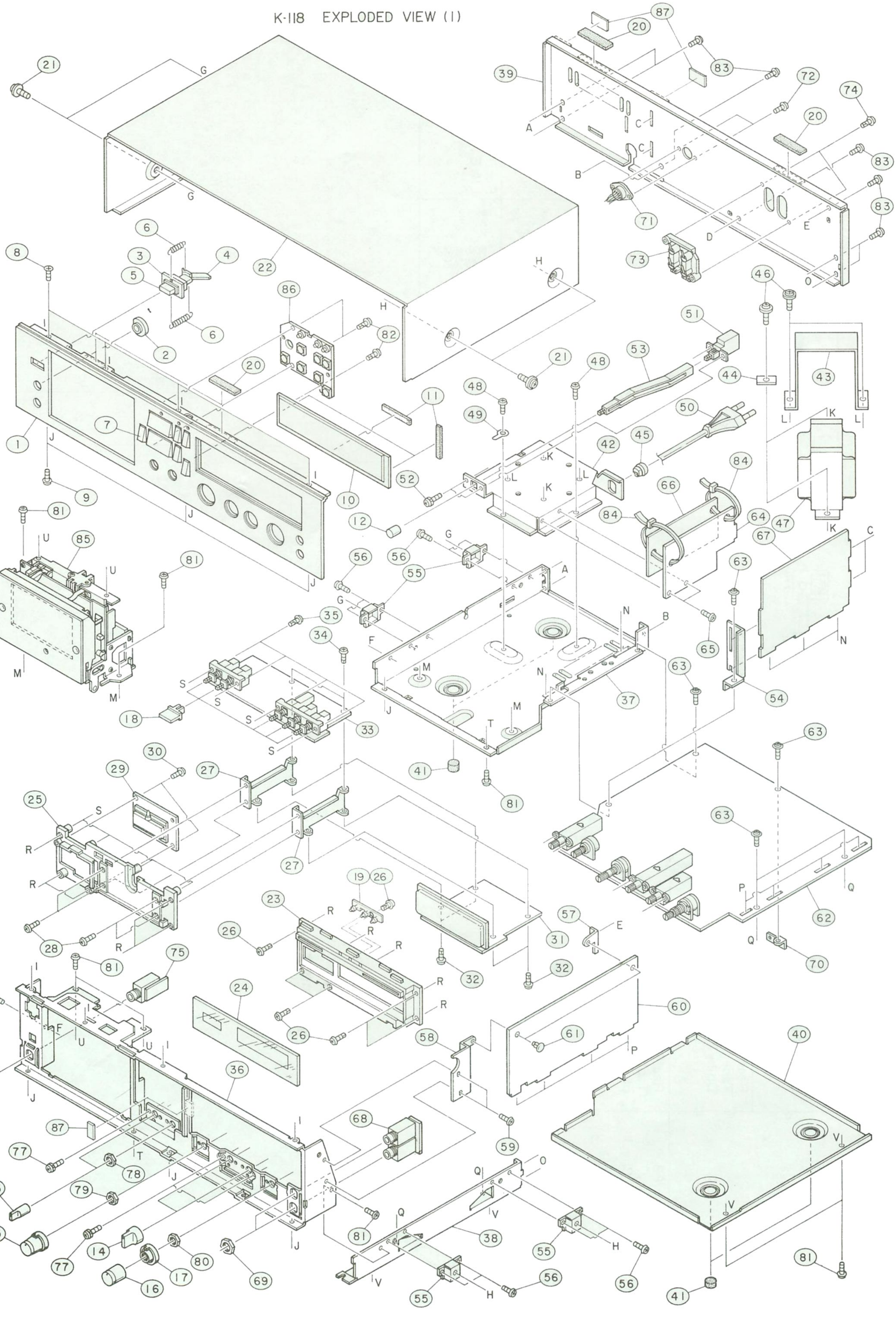

www.hifiengine.com

Exploded View (1) Parts List

SYMBOL NO.	STOCK NO.	DESCRIPTION
1	64D50936F02-0	Panel, Front
2	07R47364F01-0	Frame, Power 1089
3	07A45558F02-0	Frame, Eject
4	45A44338F01-D	Lever, Eject
5	36A44340F02-A	Knob, Power
6	41A45559F01-A	Spring, Eject
7	36C50938F01-0	Knob, Logic Control
8	03S44205G05	Scr., Tpg. M3 x 5
9	03S44205G16	Scr., Taptite
10	61B50940F01-0	Crystal, Meter
11	75A51973F01-0	Cushion, Rubber
12	36A47362F01-A	Knob, Power
13	36B51053F01-A	Knob, Rotary VR (Timer, Bias Fine)
14	36A50953F02-A	Knob, Rotary SW (U)
	36A50953F01-0	Knob, Rotary SW (Tape Select, dbx NR)
15	36R50942F02-A	Knob, Output VR (U)
	36R50942F01-A	Knob, Output VR (Output)
16	36R42022F04-0	Knob, Control (U)
	36R42022F03-0	Knob, Control (Rec Level L)
17	36R42021F01-0	Knob, Control R (Rec Level R)
18	36B51051F04-A	Knob, Push 17
19	01V53700F66-E	Ass'y, NR LED PCB
20	75B44632G04-A	Pad, Cushion
21	03S40036U01	Scr., Taptite Blk.
22	16D50993F01-A	Cabinet, Wood (U)
	15D47361F01	Cover, Top
23	07C50950F01-B	Frame, Meter
24	91A50946F02-A	Filter, Acryl
25	13C50939F02-C	Escutcheon, Meter
26	03S40012G28	Scr., Tpg. M3 x 8
27	07A50952F01-0	Bkt., Meter PCB
28	03S44205G01	Scr., Taptite M3 x 6
29	65T41785F01-B	Lamp FL Counter Ass
30	03S40012G28	Scr., Tpg. M3 x 8
31	01V54200F42-D	Ass'y, FL Meter PCB
32	03C42723U01	Scr., Cup
33	01V53600F33-P	Ass'y, Push SW PCB
34	03C42723U01	Scr., Cup
35	03S40012G28	Scr., Tpg, M3 x 8
36	27D50934F01-B	Chassis, Front
37	27C50937F01-A	Chassis, Bottom
38	27C44329F01-B	Chassis, Side
39	15C50935F01-0	Cover, Rear
	15C50935F02	Cover, Rear (SG)
40	15C44331F01-E	Cover, Bottom

SYMBOL NO.	STOCK NO.	DESCRIPTION
41	75A44348F03-A	Felt, Pad
42	07B44334F01-B	Bkt., Trans (U, EZ)
	07B44334F02	Bkt., Trans (SK, EK)
	07B44334F03	Bkt., Trans (SG)
43	07A45749F01-0	Support, Trans
44	07A40871F01-0	Support, Trans W.
45	43B41625J01-0	Stopper, Cord (U, EZ)
	43B41625J02	Stopper, Cord
46	03S40036U07	Scr., Taptite M4 x 12
47	25T52166F01-0	Trans, Power (UZ)
	25T52165F01	Trans, Power (UC)
	25T52164F01	Trans, Power (SK)
	25T52987F01	Trans, Power (SG, E)
48	03S44205G05	Scr., Taptite M3 x 5
49	29A41814G01-0	Lug
50	28T40916U01-0	Plug, AC Cord (U, EZ)
	28T50179F03	Plug, AC Cord (SK, EK)
	30T43811F01	Plug, AC Cord (SG)
51	40T47454F01-0	SW, Power SDLOP (U)
	40T45561F02	SW, Power
52	03C40014G04	Scr., Mch
53	45B44337F01-A	Lever, Knob
54	07A50947F01-A	Support, Control PCB
55	07A43780U01-0	Bkt., Side
56	03S44205G05	Scr., Taptite M3 x 5
57	07A50949F01-0	Bkt., Side PCB R
58	07A50948F01-0	Bkt., Side PCB F
59	03S44205G05	Scr., Taptite M3 x 5
60	01V53600F26AR	Ass'y, Master Board
61	05B41635J02-0	Rivet, Push
62	01V53600F26AR	Ass'y, Master Board
63	03C42723U01	Scr., Cup M3 x 6
64	01V53600F61-M	Ass'y, Fuse PCB
65	03S44205G16	Scr., Taptite
66	26A52109F01-0	Shield, Fuse PCB
67	01V53600F29-U	Ass'y, Control PCB
68	09T51188F01-0	Jack, Mic
70	07A50951F01-0	Bkt., Main PCB
71	09T42751F01-0	Din Jack 8P
72	03S40011G91	Scr., Mch M2.6 x 5
73	09T52372F01-0	Jack, Phono 4P
74	03S40012G41	Scr., Tpg M3 x 8
75	09T40027F01-0	Jack, HD Phone
77	03C40014G09	Scr, Mch M3 x 5
81	03S44205G05	Scr., Taptite M3 x 5
82	03S40012G28	Scr., Tpg M3 x 8
83	03S44205G40	Scr., Bind M3 x 4
84	37T50689F01	Wire, Bind
85	01U53000F90-0	FL87E02B Cas. DK.
86	01V54200F43-C	Ass'y, Key Board SW

Remarks;

- U
  - UZ: 120V for USA
  - UC: 120V for Canada
- S
  - SK: 220V for Europe
  - SG: 240V for England, Australia
- E
  - EK: 220V for Europe (Changeable 120V, 220V, 240V)
  - EZ: 120V for South-East Asia (Changeable 120V, 220V, 240V)

www.hifiengine.com

EXPLODED VIEW (2)

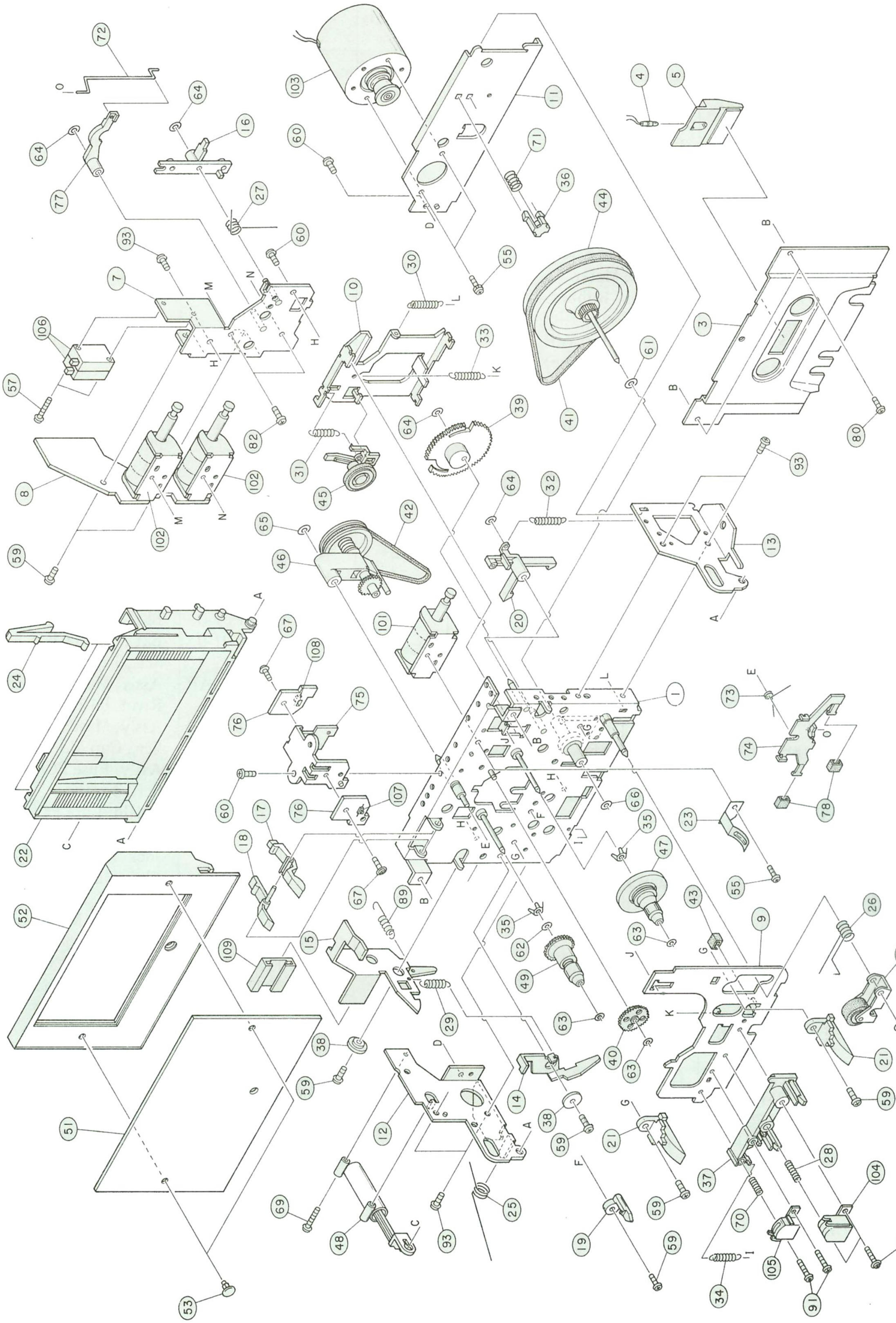

K-118 EXPLODED VIEW (2)

www.hifiengine.com

Exploded View (2) Parts List

SYMBOL NO.	STOCK NO.	DESCRIPTION
1	F011-123	Ass'y, Chassis
2	F014-053	Ass'y, Pinchroller
3	15B44924F05-D	Cover, Dust
4	65C42544U05-O	Lamp, Pilot 6V 65mA
5	61A44936F01-A	Lens, Indicator
7	F214-015	Bkt., Solenoid
8	FP11N-11	Panel, Connector
9	FR345-12	Base, Head
10	FR346-11	Base, Assist
11	FR347-12	Bkt., Motor
12	FR349-13	Bkt., Dumper
13	FR350-12	Bkt., Door
14	FR352-11	Lever, Safety
15	FC11H-12	Arm, Eject Lock
16	FR355-14	Arm, FF Solenoid
17	FR356-14	Arm, Switch
18	FD17T-12	Arm, Record
19	FR358-12	Guide, Reference
20	FR359-12	Arm, Play Solenoid
21	FR360-12	Guide, Cassette
22	FD19L-11	Frame, Door
23	FK551-13	Spring, Cassette
24	FK553-12	Spring, Hold
25	FK568-11	Spring, Door
26	FK569-13	Spring, Pinchroller
27	FK570-12	Spring, Sol. Bkt.
28	FK572-11	Spring, Azimuth
29	FK573-11	Spring, Arm Lock
30	FK574-12	Spring, Assist Base
31	FK575-11	Spring, Play Idler
32	FK576-12	Spring, Play Sol. Arm
33	FK577-12	Spring, Head Base
34	FK578-12	Spring, Head Base Hold
35	FK579-11	Spring, Back Tension
36	FM281-11	Spacer, Flywheel
37	FM283-13	Spacer, Head
38	FM296-11	Spacer
39	FN153-11	Gear, Play
40	FN154-13	Gear, Idler
41	FP462-11	Belt, Main
42	FP463-11	Belt, Sub
43	FP464-11	Pad, Cushion
44	FR13L-12	Ass'y, Flywheel
45	FP469-12	Ass'y, Idler

SYMBOL NO.	STOCK NO.	DESCRIPTION
46	FP470-11	Ass'y, Clutch
47	FR12N-11	Ass'y, Take Up Reel
48	FP472-11	Ass'y, Dumper
49	FR12P-11	Ass'y, Supply Reel
51	61A47357F01-A	Crystal, Door
52	07C47355F01-B	Frame, Door
53	05B41635J02-0	Rivet, Push
55	FG114-15	Scr., M2.6 x 4.5
56	FG137-15	Scr., F-Lock M2 x 13
57	FG143-26	Scr., Mch M2.6 x 15
59	KG194-12	Scr., Taptite M3 x 6
60	KG194-46	Scr., Taptite M3 x 4.5
61	FJ111-12	Washer, Pol. 2.5
62	FJ111-19	Washer, Pol. 2
63	FJ123-14	Washer, Lock 1.7
64	FJ123-21	Washer, Lock 2.6
65	FJ123-19	Washer, Lock 3.5
66	FJ141-12	Washer, Oil Shiel
67	FG137-11	Scr., F-Lock
69	UG11D-11	Scr., Taptite M2 x 12
70	FK572-12	Spring, Azimuth
71	FK11F-16	Spring, Thrust
72	FK11Y-12	Rod, Brake
73	FK12A-11	Spring, Brake
74	FC15G-12	Lever, Brake
75	FC15H-11	Bkt., Sensor
76	FP11E-11	Panel, Sensor
77	FD12W-12	Arm, Brake
78	FF11C-11	Rubber, Brake
80	03S40036U03	Scr., Taptite M3 x 6
82	FG143-17	Scr., Mch M2.6 x 3
89	FK11C-11	Spring, Brake Arm
91	UG11K-11	Scr., Bind M2 x 11.5
93	KG189-11	Scr., Mch
101	F082-044	Ass'y, Solenoid Bkt.
102	PKA16106	Solenoid
103	F064-093	Ass'y, Motor
104	F029-131	Head, R/P
105	F030-068	Head, Erase
106	FE173-11	SW., Slide
107	AU11C-00	LED, Sensor TLN104
108	AZ11H-00	Tr., Sensor TPS605
109	43A51937F01-B	Spacer, Eject

www.hifiengine.com

EXPLODED VIEW (3) for Wooden Cabinet Type

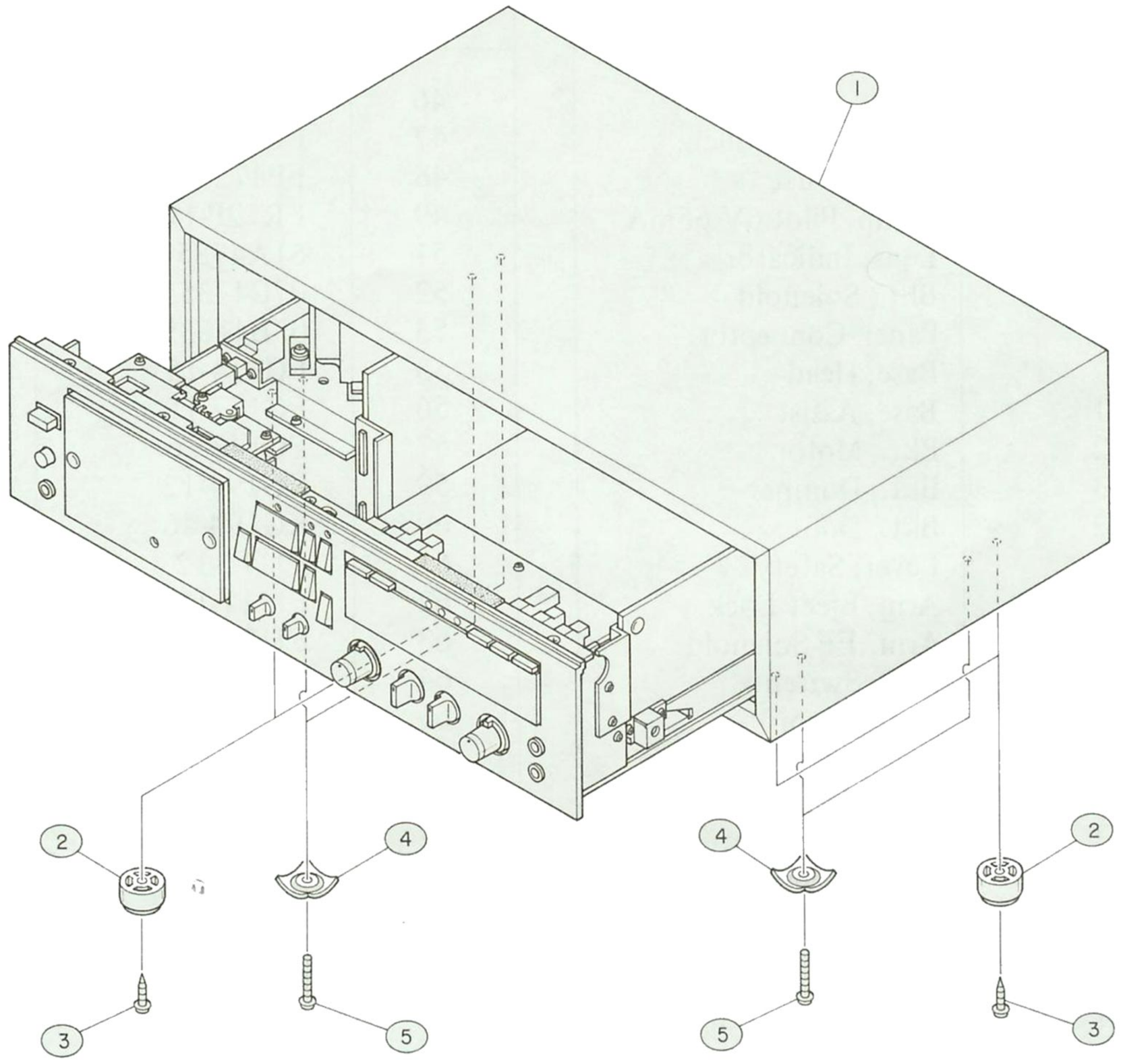

Exploded View (3) Parts List

SYMBOL NO.	STOCK NO.	DESCRIPTION
1	16D50993F01-A	Cabinet, Wood
2	75A43532P01-A	Pad, Trannleg
3	03S40013G06	Wood Scr., M3. 1 x 13
4	04A43958G01	Washer, Special
5	03S44205G35	Scr., Taptite M3 x 20

Packing Material Parts List

SYMBOL NO.	STOCK NO.	DESCRIPTION
	68R52111F01-0	Owner's Manual
	56C50570F24-0	Carton, Packing (U)
	56C50570F21	Carton, Packing
	56C50994F01-A	Tray, Packing (U)
	56C50998F01	Tray, Packing

www.hifiengine.com

MASTER P.C.B.

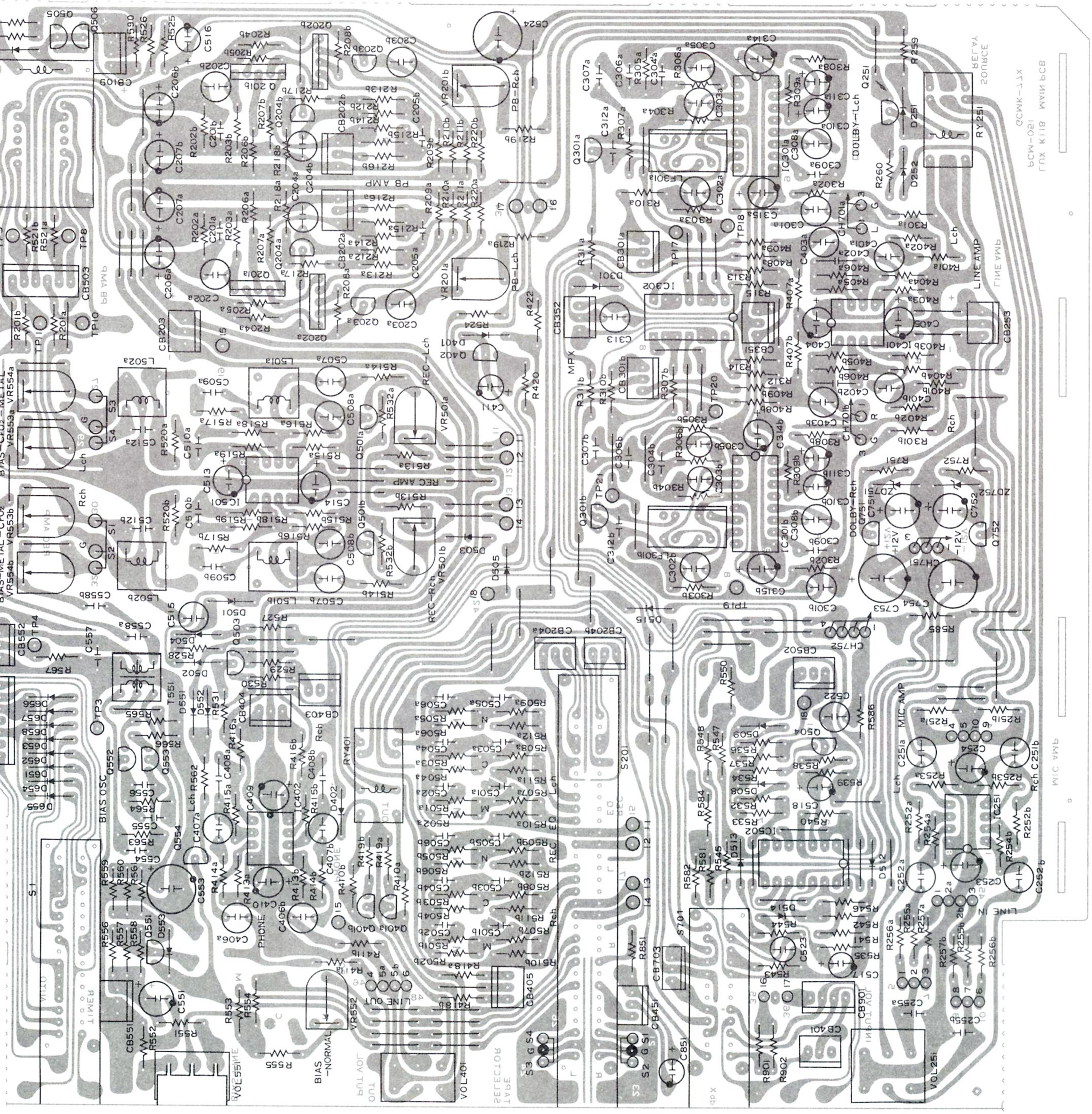

www.hifiengine.com

Master PCB Parts List

SYMBOL NO.	STOCK NO.	DESCRIPTION
[Switch]		
S1	40T51169F01-0	SW., Rotary SRZ-S6P4CNS (Timer, Auto SW)
S201	40T52124F01-0	SW., SRZ-S 3P10C-S (Bias, EQ SW)
S501	80T52120F01-0	Magnet SWEQ16401-S (Rec/Play SW)
S701	40T51168F01-0	SW., Rotary SRZ-S3P4CNS (dbx NR Select SW)
[Variable Resistor]		
VOL251	18T51170F01-0	VR., Rotary 50KB x 2 (Input)
VR401	18T51171F01-0	VR., Rotary 10KB x 2 (Output)
VR551	18T43904U01-0	VR., Rotary (Bias Fine)
[Semi-Fixed Resistor]		
VR201a, b	18C42061J24-A	Res., Var. 20K
VR501a, b	18C42061J15-B	Res., Var. 50K
VR552	18C42061J16-B	Res., Var. 100K
VR553a, b	18C42061J15-B	Res., Var. 50K
VR554a, b	18C42061J15-B	Res., Var. 50K
[Relay]		
RY251	80T52119F01-0	BR221D012
RY401	80T52119F01-0	BR221D012
[Coil OSC]		
T551	24T52126F01-0	Coil, OSC
[Coil]		
L501a, b	24T52127F01-0	Coil, 11mH
L502a, b	24T51177F01-A	Inductor, Var. 2mH
[MPX Filter]		
LF301a, b	91T52125F01-0	MPX Filter BL-30KZ
[Transistor]		
Q201a, b	48T44982P01	2SC1583G
Q202a, b	48T43816F01	2SA798F, G
Q203a, b	48T51175F01	2SC1775E
Q204a, b	48T51175F01	2SC1775E
Q251	48S43525F03	2SC1815GR
Q301a, b	48S43525F03	2SC1815GR
Q401a, b	48S43525F03	2SC1815GR
Q402	48S43525F03	2SC1815GR
Q501a, b	48S43525F03	2SC1815GR
Q503	48T51118F01	2SA1015Y
Q504	48S43525F03	2SC1815GR
Q505	48T47144F03	2SD400F
Q506	48S43525F03	2SC1815GR
Q551	48T47144F03	2SD400F
Q552	48S43525F03	2SC1815GR
Q553	48S43525F03	2SC1815GR
Q554	48S43525F03	2SC1815GR
Q751	48T47144F03	2SD400F
Q752	48T52121F01	2SB544F
[IC]		
IC251	51T52118F01-0	uPC4559C
IC301a, b	51S40114T03-0	NE650N
IC302	51T47739F01-0	TC4066BP
IC401	51T51173F01	uPC4556C
IC402	51T51173F01	uPC4556C
IC501	51T51173F01	uPC4556C
IC502	51T52130F01-0	MB3614
[Diode]		
D251	48S40477U01	1N4003
D252	48T51582F01	MA-150
D301	48T51582F01	MA-150
D401	48S40477U01	1N4003
D402	48T51582F01	MA-150
D501	48T51117F01	1S1553
D502	48T51117F01	1S1553
D503	48T51117F01	1S1553
D504	48T51582F01	MA-150
D505	48T51582F01	MA-150
D507	48S40477U01	1N4003
D508	48T51582F01	MA-150
D509	48T51582F01	MA-150
D512	48T51582F01	MA-150
D513	48T51582F01	MA-150
D514	48T51582F01	MA-150
D515	48T51582F01	MA-150
D551	48T51117F01	1S1553
D552	48T51117F01	1S1553
D553	48T51582F01	MA-150
D651	48T51582F01	MA-150
D652	48T51582F01	MA-150
D653	48T51582F01	MA-150
D654	48T51582F01	MA-150
D655	48T51582F01	MA-150
D656	48T51582F01	MA-150
D657	48T51582F01	MA-150
D658	48T51582F01	MA-150
[Zener Diode]		
ZD751	48T52739F73	HZ12B-1
ZD752	48T52739F73	HZ12B-1
[Resistor, Carbon 1/4WV]		
R201a, b	06S44593P17	10
R203a, b	06S44594P25	300K
R204a, b	06S44593P83	5.6K
R205a, b	06S44593P83	5.6K
R206a, b	06S44594P01	30K

www.hifiengine.com

SYMBOL NO.	STOCK NO.	DESCRIPTION
R207a, b	06S44593P56	430
R208a, b	06S44593P55	390
R209a, b	06S44593P94	16K
R210a, b	06S44593P94	16K
R211a, b	06S44593P79	3.9K
R212a, b	06S44594P46	2.2M
R213a, b	06S44594P32	560
R214a, b	06S44594P01	30K
R215a, b	06S44594P15	110K
R216a, b	06S44594P02	33K
R217a, b	06S44593P79	3.9K
R218a, b	06S44594P02	33K
R219a, b	06S44593P41	100
R220a, b	06S44593P96	20K
R215a, b	06S44593P86	7.5K
R252a, b	06S44593P60	620
R253a, b	06S44593P89	10K
R254a, b	06S40106T11	75K
R255a, b	06S44594P14	100K
R256a, b	06S44593P65	1K
R257a, b	06S44593P96	20K
R259	06S44593P41	100
R260	06S44593P96	20K
R301a, b	06S44593P65	1K
R302a, b	06S44594P31	510K
R303a, b	06S44594P14	100K
R304a, b	06S44594P14	100K
R305a, b	06S44593P77	3.3K
R306a, b	06S44594P06	47K
R307a, b	06S44593P43	120
R308a, b	06S44594P21	200K
R309a, b	06S44594P24	270K
R310a, b	06S44593P41	100
R311a, b	06S44593P89	10K
R312	06S44593P89	10K
R313	06S44593P89	10K
R314	06S44593P77	3.3K
R315	06S44593P77	3.3K
R401a, b	06S44593P65	1K
R402a, b	06S44594P31	510K
R403a, b	06S44594P22	220K
R404a, b	06S44593P72	2K
R405a, b	06S44594P03	36K
R406a, b	06S44594P38	1M
R407a, b	06S44594P14	100K
R408a, b	06S44593P41	100
R409a, b	06S44593P41	100
R410a, b	06S44593P65	1K
R411a, b	06S44594P07	51K
R413a, b	06S44593P99	27K
R414a, b	06S44593P72	2K
R415a, b	06S44594P01	30K
R416a, b	06S44593P48	200
R418a, b	06S44593P65	1K
R419a, b	06S44593P96	20K
R420	06S44593P96	20K
R422	06S44593P41	100
R501a, b	06S44594P14	100K
R502a, b	06S44594P08	56K
R503a, b	06S40106T11	75K
R504a, b	06S44594P10	68K
R505a, b	06S44593P65	1K
R506a, b	06S44594P10	68K
R507a, b	06S44593P65	1K
R508a, b	06S44593P85	6.8K
R509a, b	06S44593P85	6.8K
R510a, b	06S44594P14	100K
R511a, b	06S44594P13	91K

SYMBOL NO.	STOCK NO.	DESCRIPTION
R512a, b	06S44594P08	56K
R513a, b	06S44593P88	9.1K
R514a, b	06S44593P65	1K
R515a, b	06S44594P22	220K
R516a, b	06S44593P85	6.8K
R517a, b	06S44593P58	510
R518a, b	06S44594P10	68K
R519a, b	06S44594P24	270K
R520a, b	06S44593P95	18K
R521a, b	06S44593P17	10
R522	06S44593P37	68
R523	06S44593P37	68
R524	06S44593P72	2K
R525	06S44593P89	10K
R526	06S44594P06	47K
R527	06S44593P72	2K
R528	06S44593P96	20K
R529	06S44594P14	100K
R530	06S44593P89	10K
R531	06S44504P01	30K
R532	06S44594P41	100
R532a, b	06S44593P96	20K
R533	06S44593P95	18K
R534	06S24593P89	10K
R535	06S44594P15	110K
R536	06S44593P41	100
R537	06S44593P89	10K
R538	06S44593P41	100
R539	06S40106T11	75K
R540	06S44594P14	100K
R541	06S44594P01	30K
R542	06S44594P01	30K
R543	06S44593P81	4.7K
R544	06S44593P72	2K
R545	06S44594P06	47K
R546	06S44594P06	47K
R547	06S44593P72	2K
R548	06S44593P77	3.3K
R550	06S44594P14	100K
R551	06S44593P41	100
R552	06S44593P73	2.2K
R553	06S44593P72	2K
R554	06S44593P90	11K
R555	06S44593P83	5.6K
R556	06S44593P36	62
R557	06S44593P36	62
R558	06S44593P37	68
R559	06S44593P36	62
R560	06S44593P36	62
R561	06S44593P37	68
R562	06S44593P96	20K
R563	06S44593P87	8.2K
R564	06S44593P87	8.2K
R565	06S44593P17	10
R566	06S44593P17	10
R567	06S44593P01	2.2
R581	06S44593P72	2K
R582	06S44593P77	3.3K
R584	06S44594P14	100K
R585	06S44593P89	10K
R586	06S44593P89	10K
R590	06S44593P24	20
R751	06S44593P57	470
R752	06S44593P57	470
R851	06S44593P65	1K
R901	06S44593P71	1.8K
R902	06S44593P71	1.8K

www.hifiengine.com

SYMBOL NO.	STOCK NO.	DESCRIPTION
[Capacitor]		
C201a, b	08T52448F05	0.00047μF PP
C202a, b	23T42477F05	6.8μF BP 16WV El
C203a, b	23T42477F18	2.2μF BP 50WV El
C204a, b	23T42477F12	3.3μF BP 35WV El
C205a, b	08T52448F31	0.0056μF PP
C206a, b	23S40657F17	10μF 25WV El
C207a, b	23S40657F17	10μF 25WV El
C251a, b	23T42477F06	10μF BP 16WV El
C252a, b	23T42477F18	2.2μF BP 50WV El
C253	23S40657F17	10μF 25WV El
C254	23S40657F17	10μF 25WV El
C255a, b	08T42081U08	200P Po
C301a, b	23T42477F16	1μF BP 50WV El
C302a, b	23T42477F06	10μF BP 16WV El
C303a, b	23T42477F06	10μF BP 16WV El
C304a, b	08T52448F29	0.0047μF PP
C305a, b	23T42488F06	10μF BP 16WV El
C306a, b	08T52448F47	0.027μF PP
C307a, b	08T52448F31	0.0056μF PP
C308a, b	23T42447F06	10μF BP 16WV El
C309a, b	08T44481F53	0.047μF PP
C310a, b	23T42478F18	0.1μF LN 50WV El
C311a, b	23T42478F21	0.33μF LN 50WV El
C312a, b	08T52448F27	0.0039μF PP
C313	23T42477F06	10μF BP 16WV El
C314a, b	23S40657F07	47μF 10WV El
C315a, b	23S40657F07	47μF 10WV El
C401a, b	23T42477F16	1μF BP 50WV El
C402a, b	08S44505P13	10P Ce
C403a, b	23T42477F06	10μF BP 16WV El
C404	23S40657F17	10μF 25WV El
C405	23S40657F17	10μF 25WV El
C406a, b	23T42477F18	2.2μF BP 50WV El
C407a, b	23T42477F06	10μF BP 16WV El

SYMBOL NO.	STOCK NO.	DESCRIPTION
C408a, b	08S44505P17	15P Ce
C409	23S40657F17	10μF 25WV El
C410	23S40657F17	10μF 25WV El
C411	23S40757F17	10μF 25WV El
C502a, b	08T52448F17	0.0015μF PP
C503a, b	08T52448F11	0.00082μF PP
C504a, b	08T52448F17	0.0015μF PP
C506a, b	08T42081U12	300P Po
C507a, b	23T42477F16	1μF BP 50WV El
C508a, b	23T42477F06	10μF BP 16WV El
C509a, b	08T52448F31	0.0056μF PP
C510a, b	08T52448F49	0.033μF PP
C512a, b	08T52448F14	0.0011μF PP
C513	23S40657F17	10μF 25WV El
C514	23S40657F17	10μF 25WV El
C515	23T42477F06	10μF BP 16WV El
C516	23S40657F17	10μF 25WV El
C517	23S40657F17	10μF 25WV El
C518	23S40657F06	33μF 10WV El
C522	23T42477F16	1μF BP 50WV El
C523	23T42477F06	10μF BP 16WV El
C524	23S41198U49	330μF 25WV El
C551	23S40657F21	100μF 25WV El
C553	23S41198U56	470μF 16WV El
C554	08T52448T25	0.0033μF PP
C555	08T52448F25	0.0033μF PP
C556	08T52448F21	0.0022μF PP
C557	08T52448F39	0.012μF PP
C558a, b	08T52448F01	0.00033μF PP
C751	23S40657F14	100μF 16WV El
C752	23S40657F14	100μF 16WV El
C753	23S41198U41	220μF 16WV El
C754	23S41198U41	220μF 16WV El
C851	23S40657F29	2.2μF 50WV El

Remarks; Resistor: Carbon 1/4WV
Capacitor: EL . . . Electrolytic, Ce . . . Ceramic, PP . . . Polypropylene,
Po . . . Polystyrene

dbx NR PCB

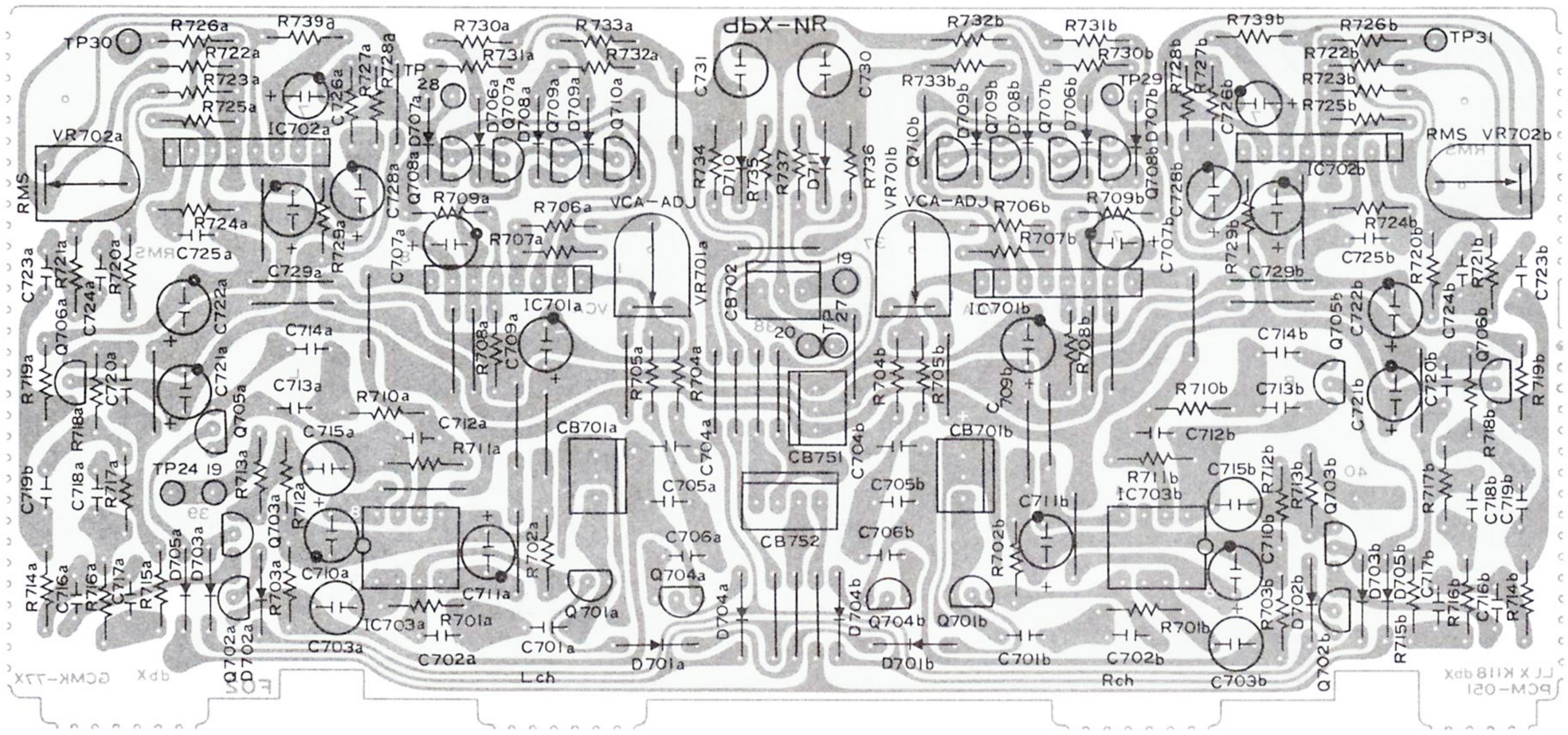

www.hifiengine.com

dbx NR PCB Parts List

SYMBOL NO.	STOCK NO.	DESCRIPTION
[Semi-Fixed Resistor]		
VR701a, b	18C42061J15-B	Res., Var. 50K
VR702a, b	18C42061J15-B	Res., Var. 50K
[IC]		
IC701a, b	51T52116F01-A	uPC1252H
IC702a, b	51T52117F01-A	uPC1253H
IC703a, b	51T52118F01-0	uPC4559C
[Diode]		
D701a, b	48T51582F01	MA-150
D702a, b	48T51582F01	MA-150
D703a, b	48T51582F01	MA-150
D704a, b	48T51582F01	MA-150
D705a, b	48T51582F01	MA-150
D706a, b	48T51582F01	MA-150
D707a, b	48T51582F01	MA-150
D708a, b	48T51582F01	MA-150
D709a, b	48T51582F01	MA-150
D710	48T51582F01	MA-150
D711	48T51582F01	MA-150
[Capacitor]		
C701a, b	08S40656F25	0.1μF My
C702a, b	08S40657F25	0.1μF My
C703a, b	23T42477F06	10μF BP 16WV El
C704a, b	08T50579F19	0.33μF
C705a, b	08T42081U08	200P Po
C706a, b	08T52448F37	0.01μF PP
C707a, b	23S40657F17	10μF 25WV El
C709a, b	23S40657F17	10μF 25WV El
C710a, b	23S40657F17	10μF 25WV El
C711a, b	23S40657F17	10μF 25WV El
C712a, b	08T42081U01	100P Po
C713a, b	08T42081U01	100P Po
C714a, b	08T52448F37	0.01μF PP
C715a, b	23T42477F06	10μF BP 16WV El
C716a, b	08S40656F25	0.1μF My
C717a, b	08S40656F25	0.1μF My
C718a, b	08T52448F25	0.0033μF PP
C719a, b	08T52448F25	0.0033μF PP
C720a, b	08T52448F01	0.00033μF PP
C721a, b	23S40657F17	10μF 25WV El
C722a, b	23S40657F17	10μF 25WV El
C723a, b	08S40656F25	0.1μF My
C724a, b	08T52448F37	0.01μF PP
C725a, b	08T52448F13	0.001μF PP
C726a, b	23T42478F05	10μF LN 16WV El
C728a, b	23S40657F17	10μF 25WV El
C729a, b	23S40657F17	10μF 25WV El
C730	23T42477F09	4.7μF BP 25WV El
C731	23T42477F09	4.7μF BP 25WV El

SYMBOL NO.	STOCK NO.	DESCRIPTION
[FET, Transistor]		
Q701a, b	48T52112F01	2SK301R
Q702a, b	48T52112F01	2SK301R
Q703a, b	48T52112F01	2SK301R
Q704a, b	48T52112F01	2SK301R
Q705a, b	48T52112F01	2SK201R
Q706a, b	48T51175F01	2SC1775E
Q707a, b	48S43525F03	2SC1815GR
Q708a, b	48S43525F03	2SC1815GR
Q709a, b	48S43525F03	2SC1815GR
Q710a, b	48S43525F03	2SC1815GR
[Resistor]		
R701a, b	06S44594P01	30K
R702a, b	06S44594P16	120K
R703a, b	06S44594P14	100K
R704a, b	06S44594P02	33K
R705a, b	06S44593P89	10K
R706a, b	06S44594P25	300K
R707a, b	06S44593P34	51
R708a, b	06S44593P79	3.9K
R709a, b	06S44593P89	10K
R710a, b	06S44593P89	10K
R711a, b	06S44594P02	33K
R712a, b	06S44594P14	100K
R713a, b	06S44593P41	100
R714a, b	06S44594P02	33K
R715a, b	06S44594P13	91K
R716a, b	06S44593P81	4.7K
R717a, b	06S44594P02	33K
R718a, b	06S44593P85	6.8K
R719a, b	06S44593P79	3.9K
R720a, b	06S44593P77	3.3K
R721a, b	06S44594P02	33K
R722a, b	06S44594P02	33K
R723a, b	06S44593P96	20K
R725a, b	06S44594P24	270K
R725a, b	06S44593P24	20
R726a, b	06S44594P02	33K
R727a, b	06S44593P17	9.1 ± 5%
R729a, b	06S44593P65	1K
R730a, b	06S44594P13	91K
R731a, b	06S44594P13	91K
R732a, b	06S44594P13	91K
R733a, b	06S44594P13	91K
R734	06S44593P89	10K
R735	06S44593P72	2K
R736	06S44593P89	10K
R737	06S44593P72	2K
R739a, b	06S44594P38	1.5M ± 1%

Remarks: Resistor: Carbon 1/4WV
Capacitor: El . . . Electrolytic, My . . . Mylar, PP . . . Polypropylene
Po . . . Polystyrene

www.hifiengine.com

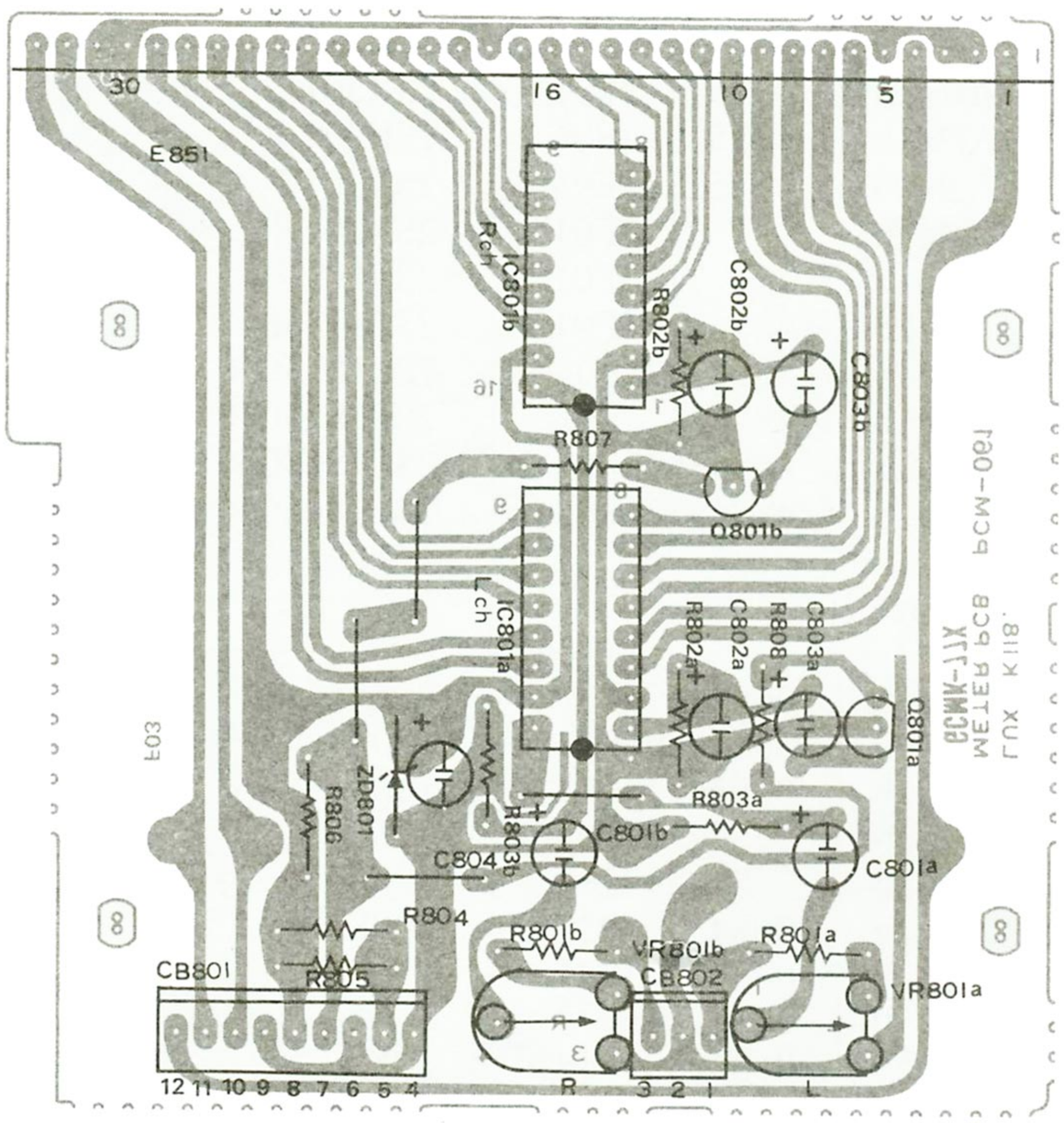

Control Supply PCB

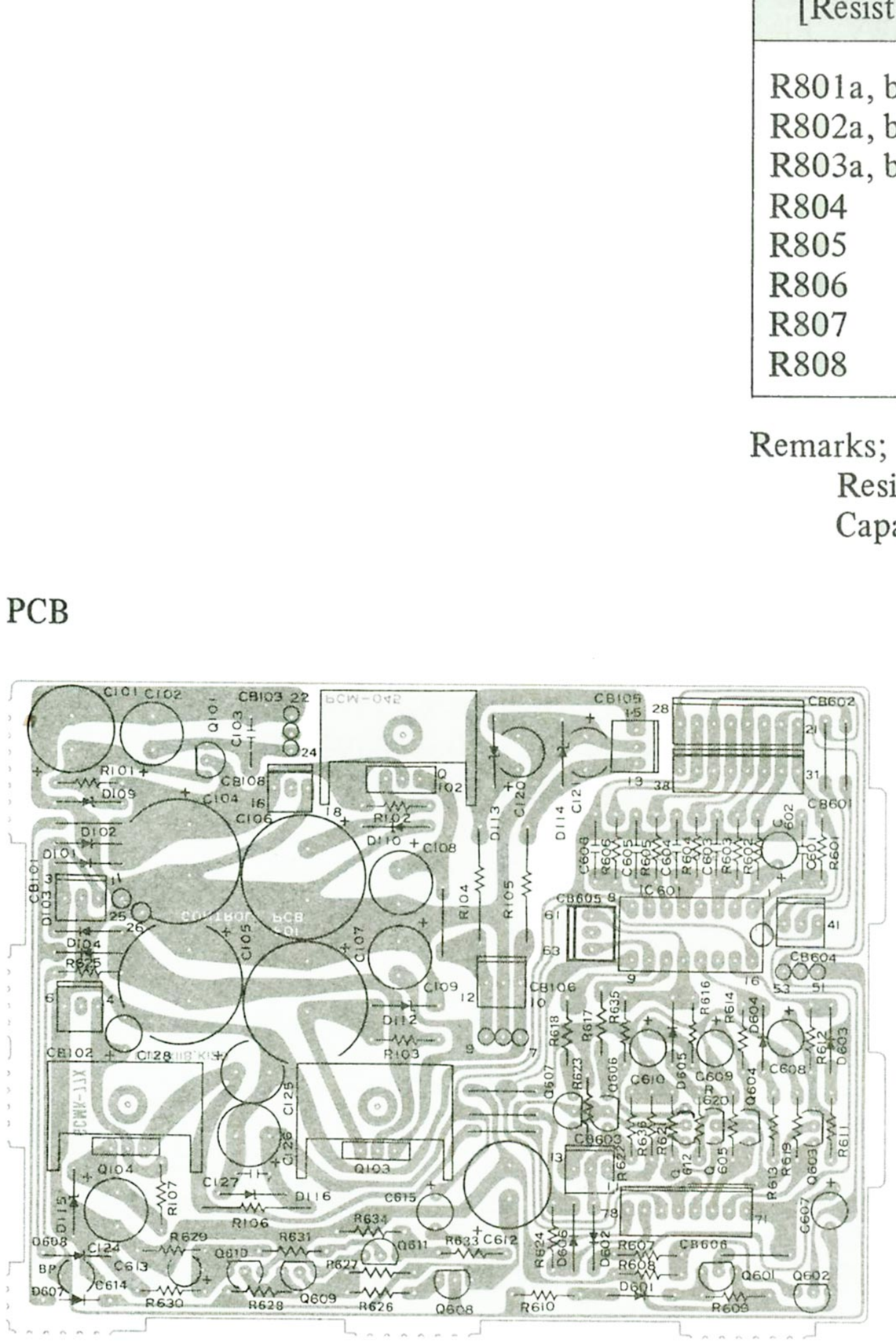

Meter PCB Parts List

SYMBOL NO.	STOCK NO.	DESCRIPTION
[IC]		
IC801a, b	51T52864F01-0	BA6146
[Semi-Fixed Resistor]		
VR801a, b	18C42061J24-A	Res., Var. 20K
[Transistor]		
Q801a, b	48S43525F03	2SC1815GR
[Diode]		
ZD801	48T52739F79	HZ16-1 Zener
[Meter FL]		
E851	65T44406U01-A	FL Meter 21AW
[Capacitor]		
C801a, b	23S40657F17	10μF 25WV El
C802a, b	23S40657F17	10μF 25WV El
C803a, b	23S40657F19	33μF 25WV El
C804	23S40657F21	100μF 25WV El
[Resistor]		
R801a, b	06S44593P99	27K
R802a, b	06S44593P89	10K
R803a, b	06S44594P06	47K
R804	06S44593P52	300
R805	06S44593P52	300
R806	06S44593P89	10K
R807	06S44593P89	10K
R808	06S44593P89	10K

Remarks;
Resistor: Carbon 1/4WV
Capacitor: EL . . . Electrolytic

www.hifiengine.com

Control Supply PCB Parts List

SYMBOL NO.	STOCK NO.	DESCRIPTION
[IC]		
IC601	51S47110F01-0	BA843
[Diode]		
D101	48S40477U01	1N4003
D102	48S40477U01	1N4003
D103	48S40477U01	1N4003
D104	48S40477U01	1N4003
D109	48T52739F85	HZ20-1 Zener
D110	48T52739F79	HZ16-1 Zener
D112	48T52739F79	HZ16-1 Zener
D113	48T52739F49	HZ7C-1 Zener
D114	48T52739F49	HZ7C-1 Zener
D115	48T52739F73	HZ12B-1 Zener
D116	48T52739F31	HZ5C-1 Zener
D601	48T51582F01	MA-150
D602	48T51582F01	MA-150
D603	48T51582F01	MA-150
D604	48T51582F01	MA-150
D605	48T51582F01	MA-150
D606	48T51582F01	MA-150
D607	48S40477U01	1N4003
D608	48T51582F01	MA-150
[Capacitor]		
C101	23S41198U57	470μF 25WV El
C102	23S41198U42	220μF 25WV El
C104	23S41198U73	2200μF 35WV El
C105	23S41198U73	2200μF 35WV El
C106	23S41198U72	2200μF 25WV El
C107	23S41198U72	2200μF 25WV El
C108	23S41198U42	220μF 25WV El
C109	23S41198U42	220μF 25WV El
C120	23S40657F09	220μF 10WV El
C121	23S40657F09	220μF 10WV El
C124	23S41198U41	200μF 16WV El
C125	23S41198U56	470μF 16WV El
C126	23S40657F04	220μF 6.3WV El
C128	23S40657F17	10μF 25WV El
C601	08S44505P61	10000P Ce
C602	23S40657F28	1μF 50WV El
C603	08S44505P61	10000P Ce
C604	08S44505P61	10000P Ce
C605	08S44505P61	10000P Ce
C606	08S44505P61	10000P Ce
C607	23S40657F16	4.7μF 25WV El
C608	23S40657F17	10μF 25WV El
C609	23S40657F17	10μF 25WV El
C610	23S40657F17	10μF 25WV El
C612	23S41198U58	470μF 35WV El
C613	23S41198U33	100μF 10WV El
C615	23S40657F29	2.2μF 50WV El
[Transistor]		
Q101	48T47144F03	2SD400F
Q102	48T51183F01	2SD313E
Q103	48T47151F01	2SB507E
Q104	48T51183F01	2SD313E

SYMBOL NO.	1 STOCK NO.	DESCRIPTION
Q601	48S43525F03	2SC1815GR
Q602	38S43525F03	2SC1815GR
Q603	48S43525F03	2SC1815GR
Q604	48S43525F03	2SC1815GR
Q605	48S43525F03	2SC1815GR
Q606	48S43525F03	2SC1815GR
Q607	48S43525F03	2SC1815GR
Q608	48T51118F02	2SA1015GR
Q609	48T43525F03	2SC1815GR
Q610	48T43525F03	2SC1815GR
Q611	48T43525F03	2SC1815GR
Q612	48T43525F03	2SC1815GR
[Resistor]		
R101	06S44593P59	560
R102	06S44593P65	1K
R103	06S44593P65	1K
R104	06C44652G04	120 1WV Rm
R105	06C44652G04	120 1WV Rm
R106	06C44652G33	100 1WV Rm
R107	06S44593P63	820
R601	06S44593P29	33
R602	06S44593P29	33
R603	06S44593P29	33
R604	06S44593P29	33
R605	06S44593P29	33
R606	06S44593P29	33
R607	06S44593P97	22K
R608	06S44594P14	100K
R609	06S44594P14	100K
R610	06S44593P93	15K
R611	06S44593P4T	100
R612	06S44593P89	10K
R613	06S44593P41	100
R614	06S44593P89	10K
R615	06S44593P77	3.3K
R616	06S44593P89	10K
R617	06S44593P89	10K
R618	06S44593P89	10K
R619	06S44594P06	47K
R620	06S44594P06	47K
R621	06S44594P06	47K
R622	06S44594P06	47K
R623	06S44594P06	47K
R624	06S44593P89	10K
R625	06S44594P26	330K
R626	06S44593P89	10K
R627	06S44594P14	100K
R628	06S44594P14	100K
R629	06S44594P07	51K
R630	06S44594P24	270K
R631	06S44593P41	100
R633	06S44593P89	10K
R634	06S44594P14	100K
R635	06S44598P89	10K
R636	06S44594P06	47K

Remarks: Resistor: Rm . . . Metal Film
Capacitor: El . . . . Electrolytic, Ce . . . Ceramic

www.hifiengine.com

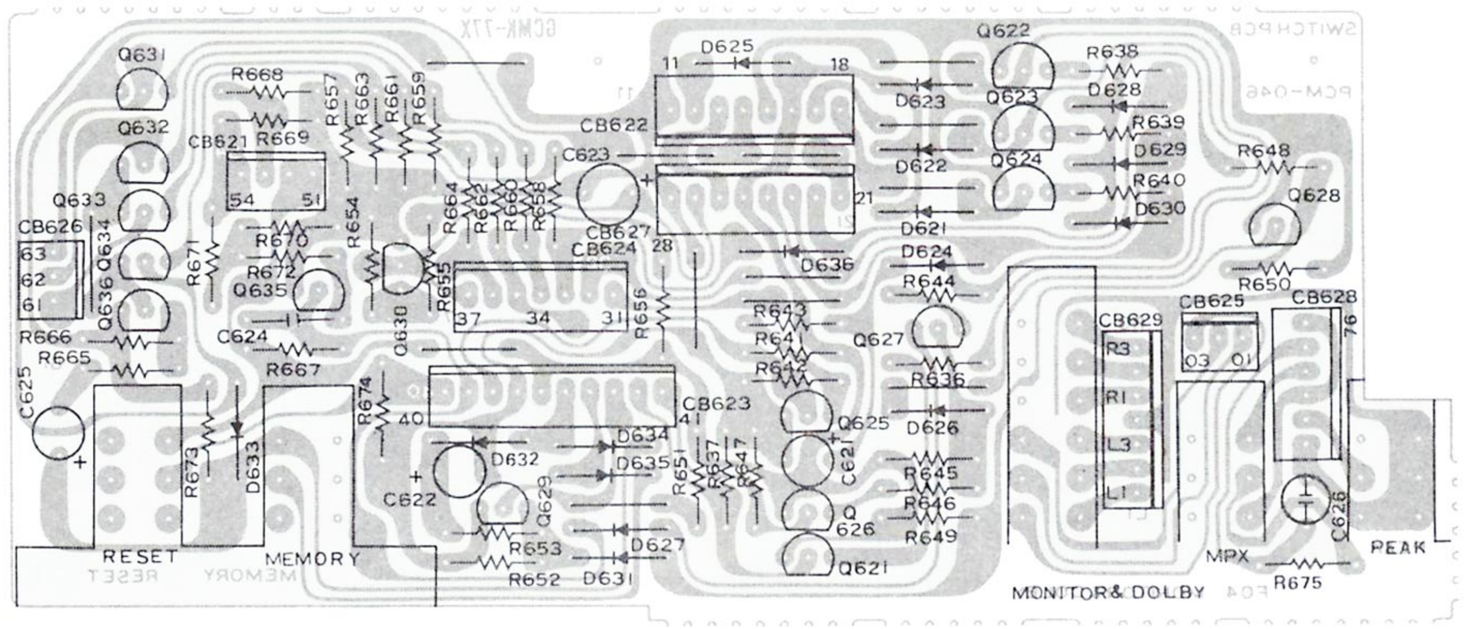

Switch PCB Parts List

SYMBOL NO.	STOCK NO.	DESCRIPTION
[Switch]		
S601	40T51185F01-0	Push SUL2 Reset, Memory
S602	40T51186F01-0	Push SUL3 Dolby, MPX, Peak
[Transistor]		
Q621	48T51118F01	2SA1015
Q622	48T47144F03	2SD400F
Q623	48T47144F03	2SD400F
Q624	48T47144F03	2SD400F
Q625	48S43525F03	2SC1815GR
Q626	48T51118F01	2SA1015
Q627	48S43525F03	2SC1815GR
Q628	48S43525F03	2SC1815GR
Q629	48S43525F03	2SC1815GR
Q630	48S43525F03	2SC1815GR
Q631	48S43525F03	2SC1815GR
Q632	48S43525F03	2SC1815GR
Q633	48S43525F03	2SC1815GR
Q634	48S43525F03	2SC1815GR
Q635	48S43525F03	2SC1815GR
Q636	48S43525F03	2SC1815GR
[Capacitor]		
C621	23S40657F29	2.2μF 50WV El
C622	23S40657F31	4.7μF 50WV El
C623	23S41198U55	470μF 10WV El
C624	08S44505P37	100P Ce
C625	23S40657F29	2.2μF 50WV El
[Diode]		
D621	48S40477U01	1N4003
D622	48S40477U01	1N4003
D623	48S40477U01	1N4003
D624	48T51582F01	MA-150
D625	48S40477U01	1N4003
D626	48T51582F01	MA-150
D627	48T51582F01	MA-150
D628	48T51582F01	MA-150
D629	48T51582F01	MA-150
D630	48T51582F01	MA-150
D631	48T51582F01	MA-150
D632	48T51582F01	MA-150
D633	48T51582F01	MA-150
D634	48T51582F01	MA-150
D635	48T51582F01	MA-150
D636	48T51582F01	MA-150
[Resistor, Carbon 1/4WV]		
R636	06S44593P89	10K
R637	06S44594P07	51K
R638	06S44593P73	2.2K
R639	06S44593P73	2.2K
R640	06S44593P73	2.2K
R641	06S44593P89	10K
R642	06S44594P14	100K
R643	06S44593P97	22K
R644	06S44593P89	10K
R645	06S44594P14	100K
R646	06S44593P89	10K
R647	06S44594P07	51K
R648	06S44593P89	10K
R649	06S44593P97	22K
R650	06S44593P89	10K
R651	06S44594P07	51K
R652	06S44594P14	100K
R653	06S44593P97	22K
R654	06S44593P85	6.8K
R655	06S44594P01	30K
R656	06S44593P93	15K
R657	06S44593P89	10K
R658	06S44593P89	10K
R659	06S44593P89	10K
R660	06S44593P89	10K
R661	06S44593P89	10K
R662	06S44593P89	10K
R663	06S44593P89	10K
R664	06S44593P89	10K
R665	06S44593P89	10K
R666	06S44593P89	10K
R667	06S44593P89	10K
R668	06S44593P59	560
R669	06S44593P69	1.5K
R670	06S44593P85	6.8K
R671	06S44594P06	47K
R672	06S44593P89	10K
R673	06S44593P96	20K
R674	06S44594P07	51K

www.hifiengine.com

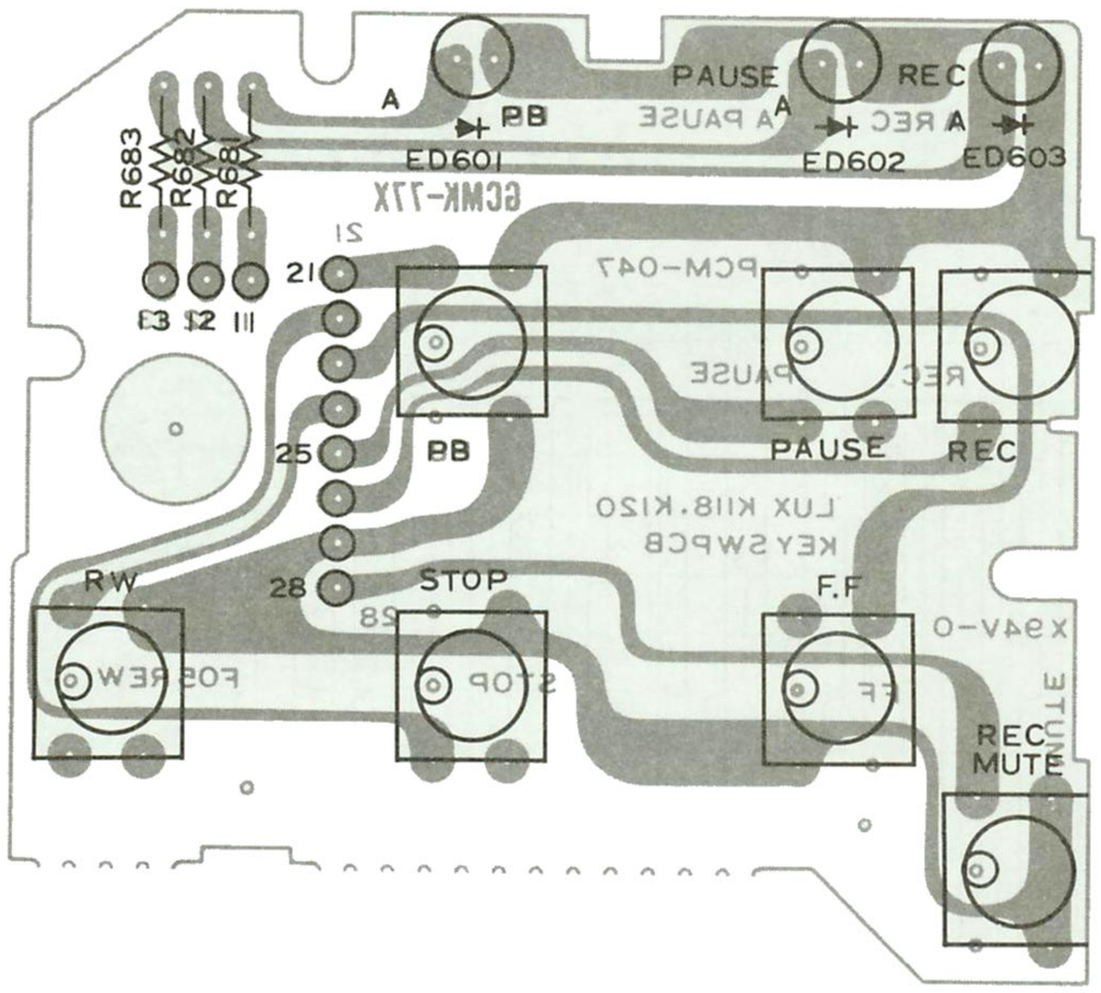

Key Switch PCB Pbrts List

SYMBOL NO.	STOCK NO.	DESCRIPTION
[Switch]		
S651	40T44505F01-0	SW., KHG Play
S652	40T44595F01-0	SW., KHG Stop
S653	40T44505F01-0	SW., KHG FF
S654	40T44505F01-0	SW., KHG Rew
S655	40T44505F01-0	SW., KHG Pause
S656	40T44505F01-0	SW., KHG Rec
S657	40T44505F01-0	SW., KHG Rec Mute
[LED]		
ED601	48T40818T02	GL-2PGl Grn. Play
ED602	48T40818T02	GL-2PGl Grn. Pause
ED603	48T40818T01	GL-2ARl Red Rec
[Resistor, Carbon 1/4WV]		
R681	06S44593P45	150
R682	06S44593P47	180
R683	06S44593P49	220

Fuse PCB Parts List

SYMBOL NO.	STOCK NO.	DESCRIPTION
[Fuse]		
F101	65T42077U10	Fuse 250mA (S)
F102	65T42077U14	Fuse 630mA (S)
F103	65T42077U14	Fuse 630mA (S)
F104	65T42077U15	Fuse 800mA (S)
[Diode]		
D105	48S40477U01	1N4003
D106	48S40477U01	1N4003
D107	48S40477U01	1N4003
D108	48S40477U01	1N4003
[Capacitor, Electrolytic]		
C123	23S41198U65	10000μF 25WV
[Resistor, Carbon 1/4WV]		
R121	06S44593P41	100
R122	06S44593P51	51
R123	06S44593P51	51

Remarks: (S) . . . 220V or 240V for Europe

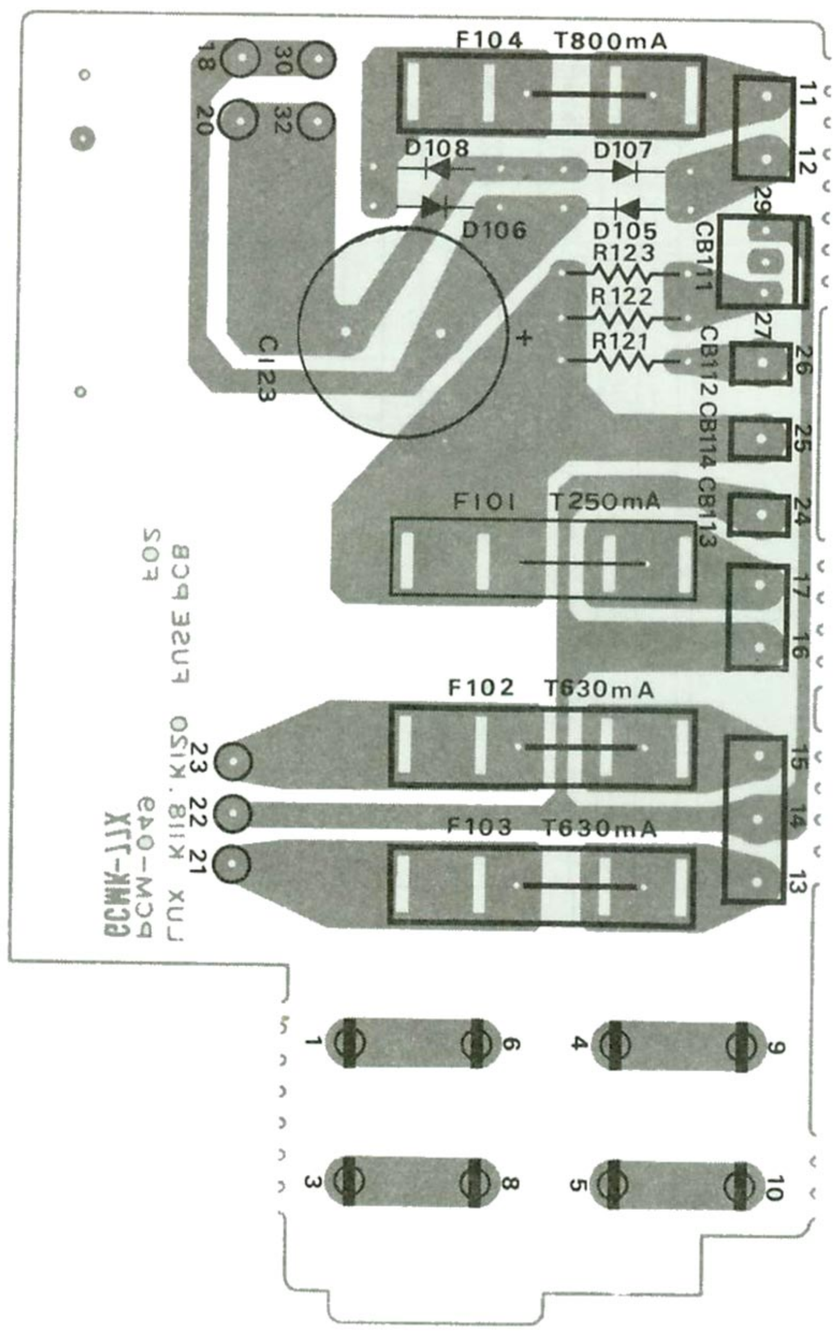

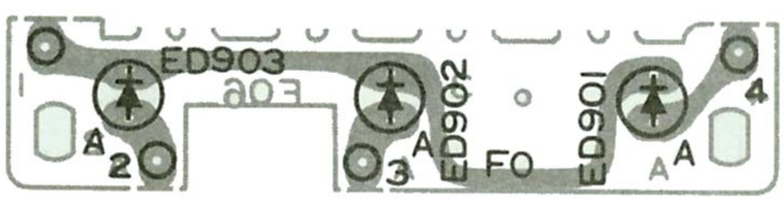

LED PCB Parts List

SYMBOL NO.	STOCK NO.	DESCRIPTION
[LED]		
ED901	48T40818T02	GL-2PGl Grn. Dolby NR
ED902	48T40818T02	GL-2PGl Grn dbx Tape
ED903	48T40818T02	GL 2PGl Grn dbx Disc

www.hifiengine.com

Control Signal Time Chart

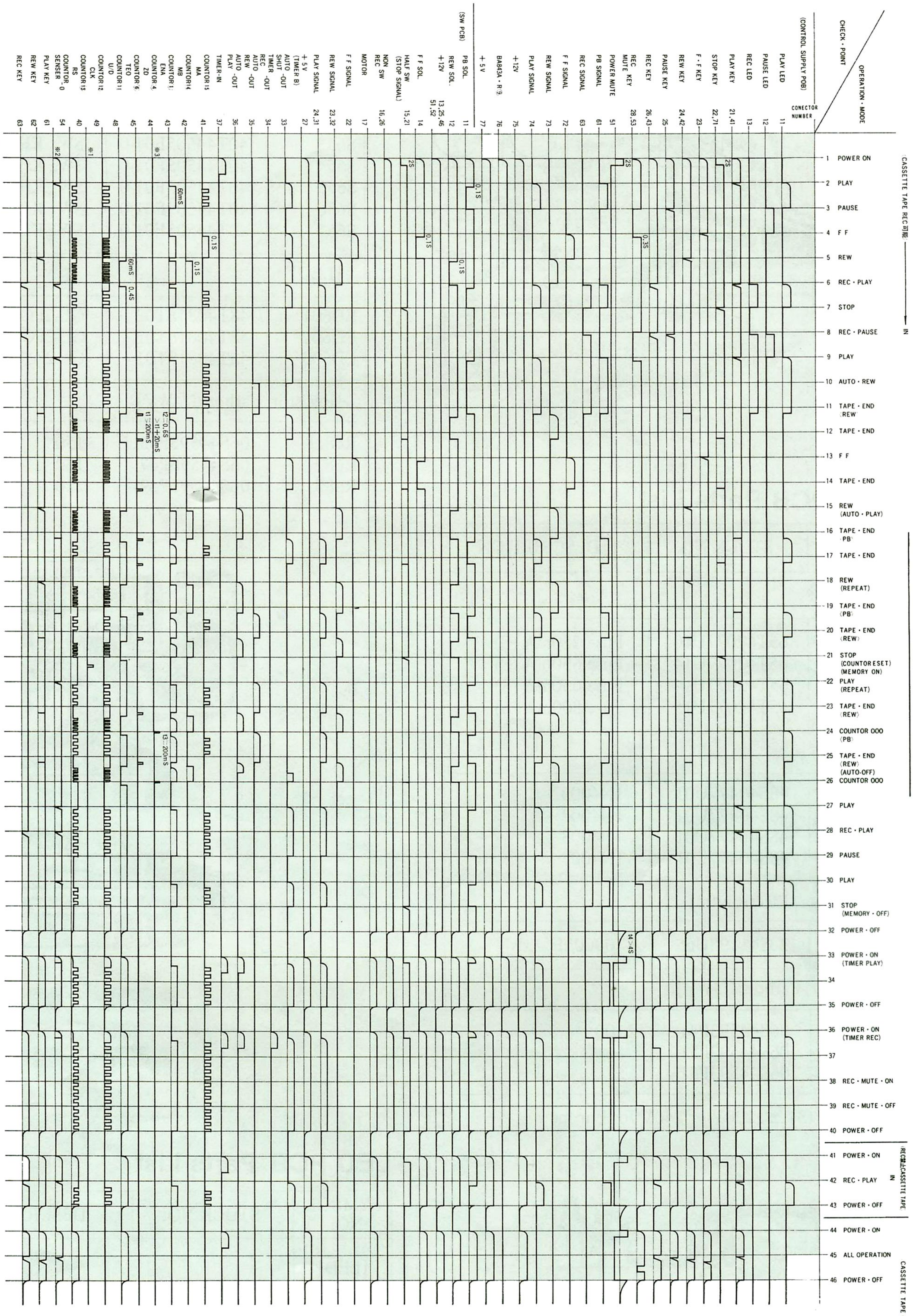

Remarks:

*1 When the operation is set at stop position, consider that the value of voltage at this measuring point is "L" although you may catch "H" or "L" voltage on actual measurement.

*2 When the operation is set at stop position, consider that the value of voltage at this measuring point is "H" although you may catch "H" or "L" voltage on actual measurement.

*3 In case of U/D output power at "L" voltage and zero position (000) of tape counter, ZD output power generates "H" palse.

www.hifiengine.com

SCHEMATIC DIAGRAM

K-118 MAIN PCB

Schematic Diagram YE-0304

6I	6J	S701-4C	REC	REC	PB	PB or DISC
L	L	OFF	H	L	L	L
L	L	DISC	H	L	L	H
H	L	-	H	L	H	H
H	H	-	L	H	L	L
H=5V, L=0V			H=12V, L=-12V			

Note 1 ISI555=MA-150
2 ISI554=ISI553

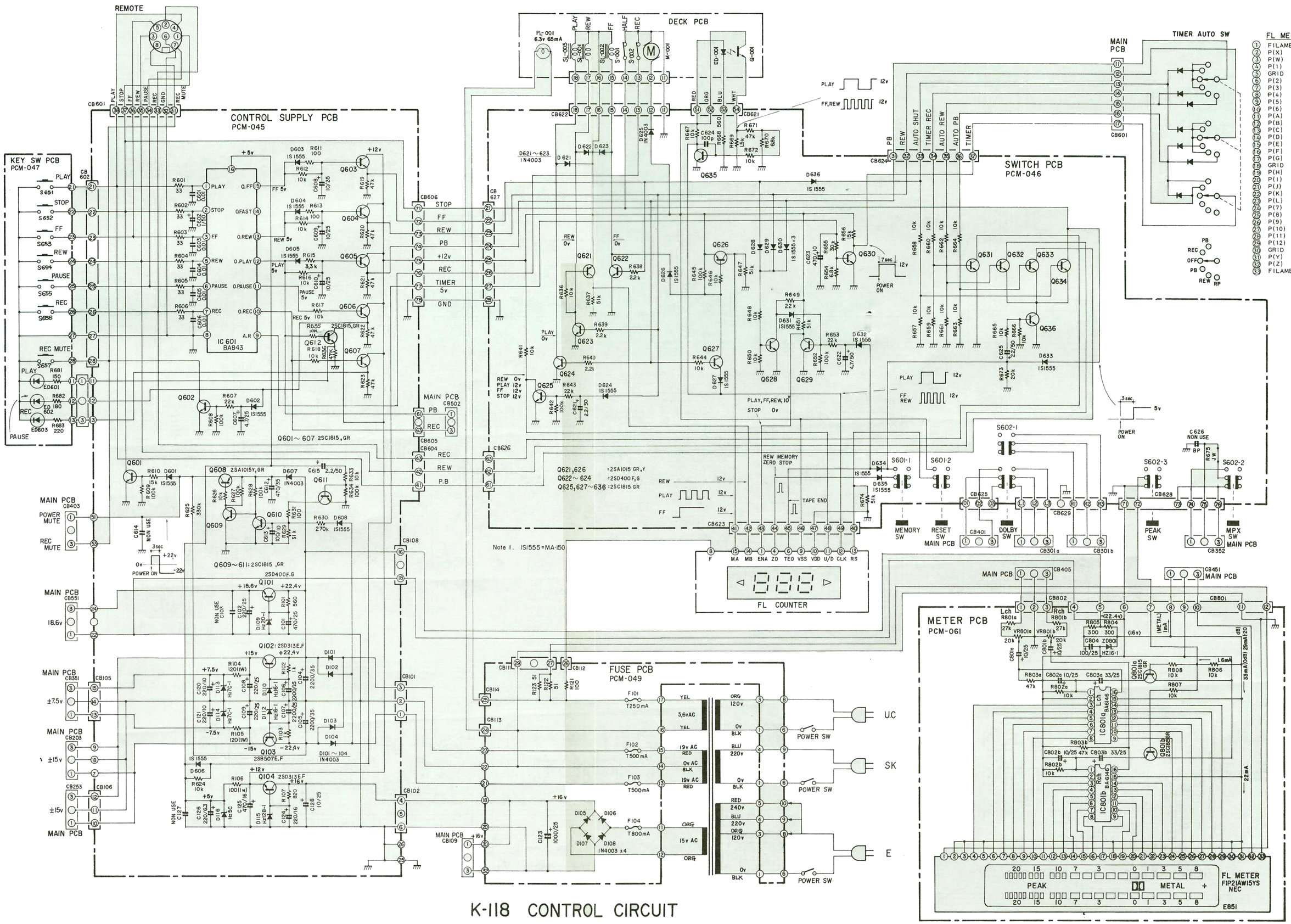

FL METER
1 FILAMENT
2 P(X)
3 P(W)
4 P(1) -20dB(L)
5 GRID
6 P(2) -15dB(L)
7 P(3) -10dB(L)
8 P(4) -7dB(L)
9 P(5) -5dB(L)
10 P(6) -3dB(L)
11 P(A) -20dB(R)
12 P(B) -15dB(R)
13 P(C) -10dB(R)
14 P(D) -7dB(R)
15 P(E) -5dB(R)
16 P(F) -3dB(R)
17 P(G) -1dB(R)
18 GRID
19 P(H) 0dB(R)
20 P(I) +1dB(R)
21 P(J) +3dB(R)
22 P(K) +5dB(R)
23 P(L) +8dB(R)
24 P(7) -1dB(L)
25 P(8) 0dB(L)
26 P(9) +1dB(L)
27 P(10) +3dB(L)
28 P(11) +5dB(L)
29 P(12) +8dB(L)
30 GRID
31 P(Y)
32 P(Z)
33 FILAMENT

K-118 CONTROL CIRCUIT

dbx Block Diagram

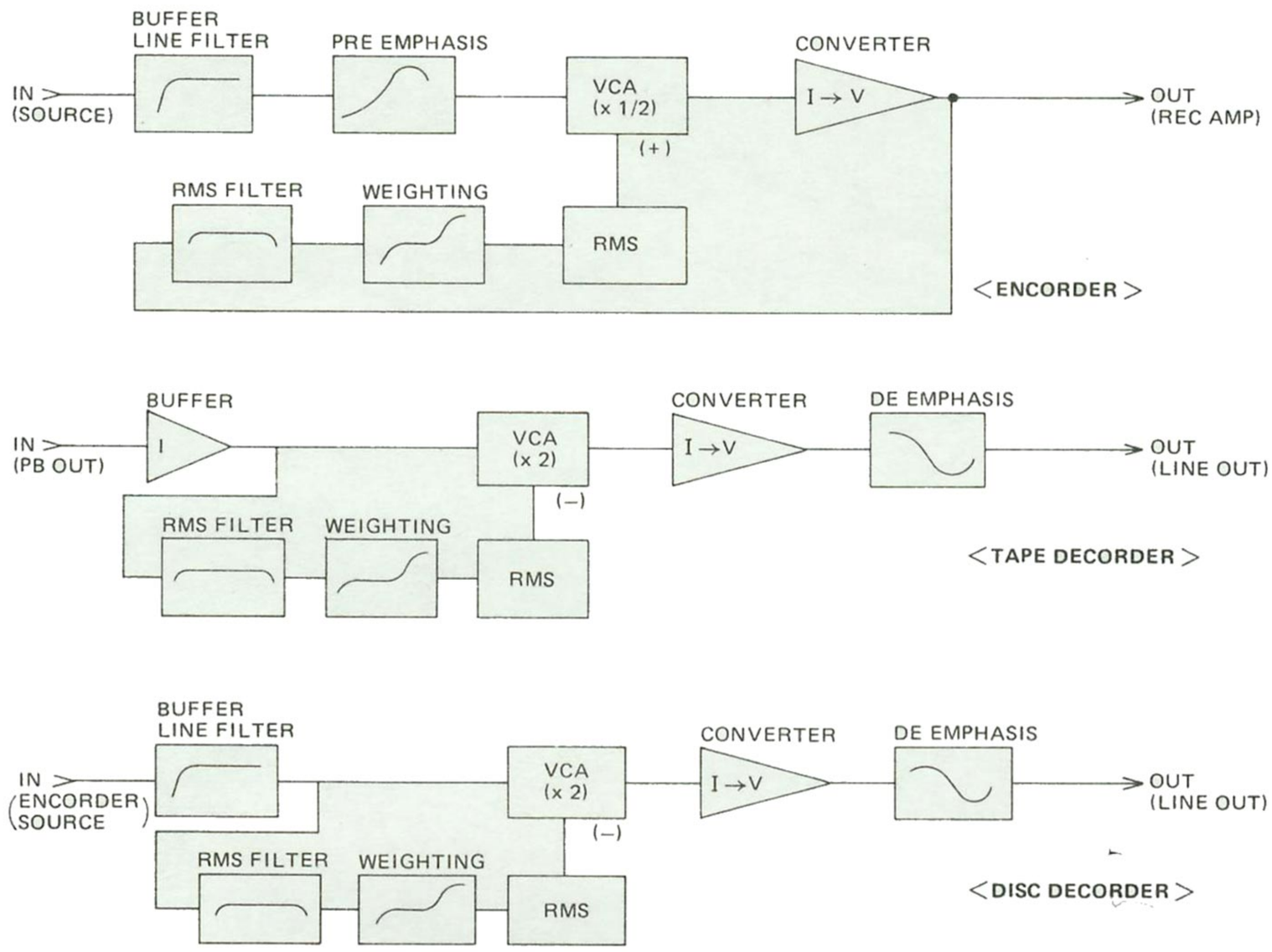

Specifications

Heads:	2 heads (Sendust)
Wow & Flutter:	no more than 0.04% (W.R.M.S.)
Signal-to-Noise Ratio:	better than 58 dB (DOLBY NR OFF) . . . . . metal tape
	better than 67 dB (DOLBY NR ON) . . . . . metal tape
	better than 93 dB (dbx NR ON) . . . . . metal tape
	better than 58 dB (DOLBY NR OFF) . . . . . CrO_2 tape
	better than 67 dB (DOLBY NR ON) . . . . . CrO_2 tape
	better than 92 dB (dbx NR ON) . . . . . CrO_2 tape
	better than 58 dB (DOLBY OFF) . . . . . LH tape
	better than 67 dB (DOLBY ON) . . . . . LH tape
	better than 92 dB (dbx NR ON) . . . . . LH tape
Frequency Response:	20 – 20,000 Hz (metal tape)
	20 – 18,000 Hz (CrO_2 tape)
	20 – 17,000 Hz (LH tape)
The 3rd Harmonic Distortion	no more than 0.6% (LH tape, 400 Hz, 0 dB)
Input Sensitivity:	Line in: 60 mV
	mic: 0.3 mV (recommended microphone impedance: 600 ~ 10 kohms)
Output Sensitivity:	line out: 500 mV
	headphone: 1 mW (8 ohms load)
Power Consumption:	35 W
Dimensions:	438(W) x 275(D) x 109(H) mm
	(17.5" x 11" x 4.4")
	(including Legs, Rear Protrusions & Knobs)
Weight:	Net 6.0 kgs (13.2 lbs.)
	Gross 7.0 kgs (15.4 lbs.)

Specifications and appearance design subject to change without notice.

*NOISE REDUCTION CIRCUIT MADE UNDER LICENCE FROM DOLBY LABORATORIES. THE WORD "DOLBY" AND THE DOUBLE-D SYMBOL ARE THE TRADE MARKS OF DOLBY LABORATORIES.

*dbx is the trade mark of dbx Incorporated.

www.hifiengine.com



LUX CORPORATION, JAPAN

1-1, 1-CHOME, SHINSENRI-NISHIMACHI, TOYONAKA-SHI OSAKA 565
PHONE: 06-834-0004 CABLE: LUXMAN TOYONAKA TELEX: 5287106 LUXELE J

www.hifiengine.com