Schematic Diagram

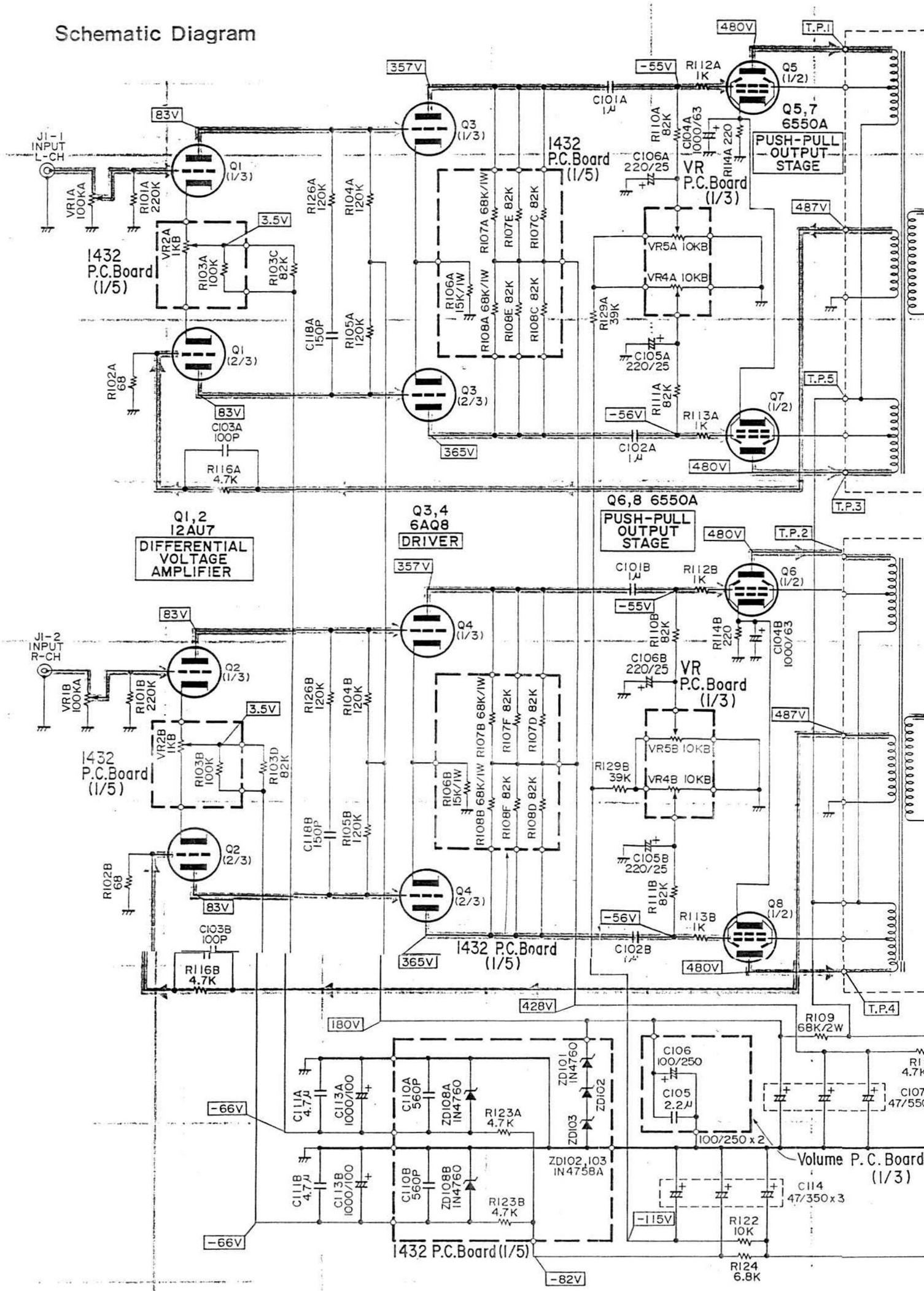

<Notes>
- Measuring Condition
- Power supply voltage : AC220V , 50/60Hz
- Measuring meter : Digital multi meter
- Measuring point reference : Between ground
- Measuring condition : No signal input

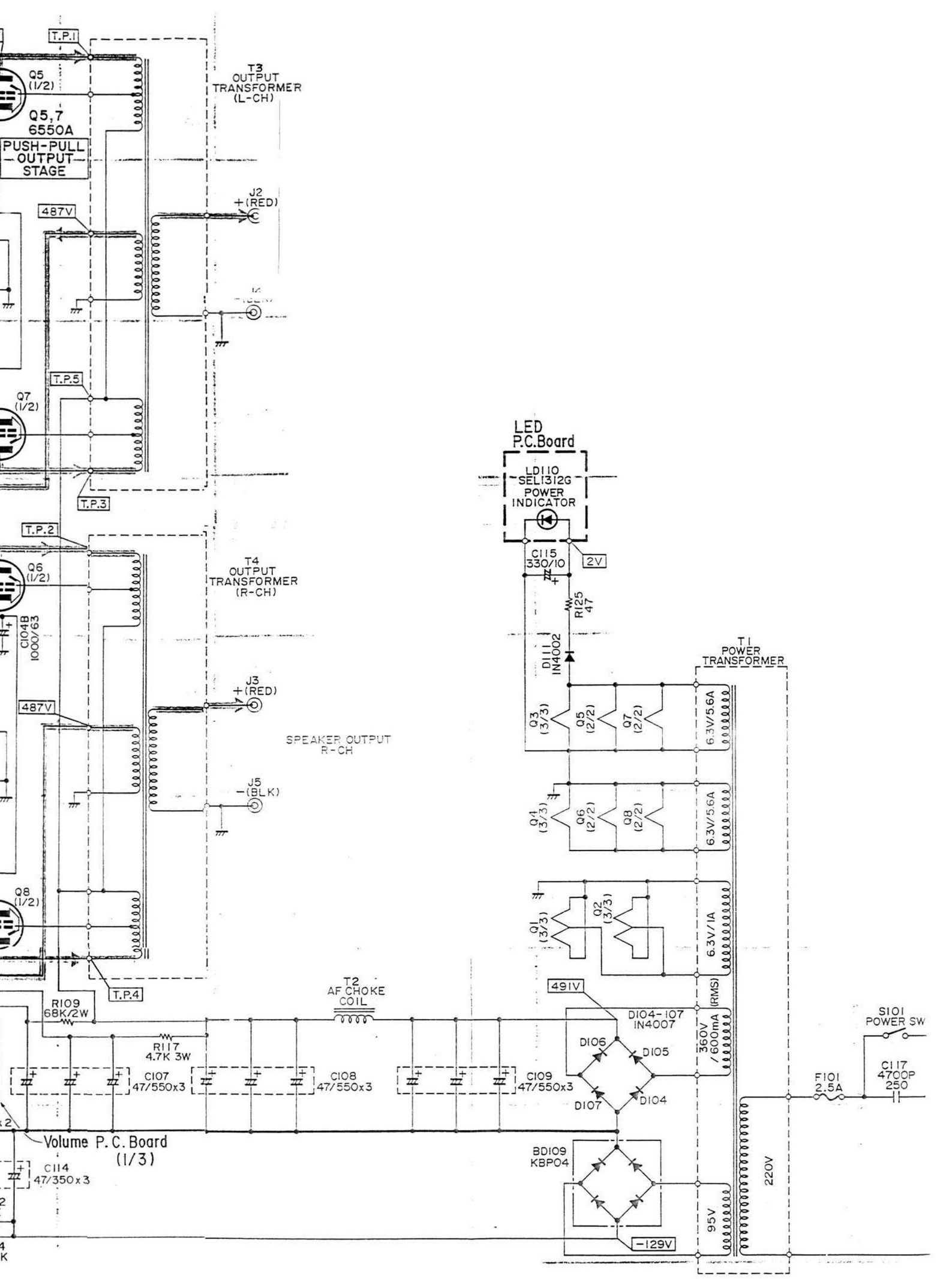
T.P.1
Q5
(1/2)
Q5,7
6550A
PUSH-PULL
OUTPUT
STAGE
T3
OUTPUT
TRANSFORMER
(L-CH)
J2
+(RED)
487V
T.P.5
Q7
(1/2)
T.P.3
T.P.2
Q6
(1/2)
C104B
1000/63
T4
OUTPUT
TRANSFORMER
(R-CH)
J3
+(RED)
487V
SPEAKER OUTPUT
R-CH
J5
-(BLK)
Q8
(1/2)
T.P.4
R109
68K/2W
R117
4.7K 3W
T2
AF CHOKE
COIL
C107
47/550x3
C108
47/550x3
C109
47/550x3
Volume P.C.Board
(1/3)
C114
47/350x3
LED
P.C.Board
LD110
SEL1312G
POWER
INDICATOR
C115
330/10
2V
R125
47
D111
IN4002
T1
POWER
TRANSFORMER
Q3
(3/3)
Q5
(2/2)
Q7
(2/2)
6.3V/5.6A
Q4
(3/3)
Q6
(2/2)
Q8
(2/2)
6.3V/5.6A
Q1
(3/3)
Q2
(3/3)
6.3V/1A
491V
D104-107
IN4007
D106
D105
D107
D104
360V
/600mA
(RMS)
BD109
KBP04
95V
-129V
220V
S101
POWER SW
F101
2.5A
C117
4700P
250