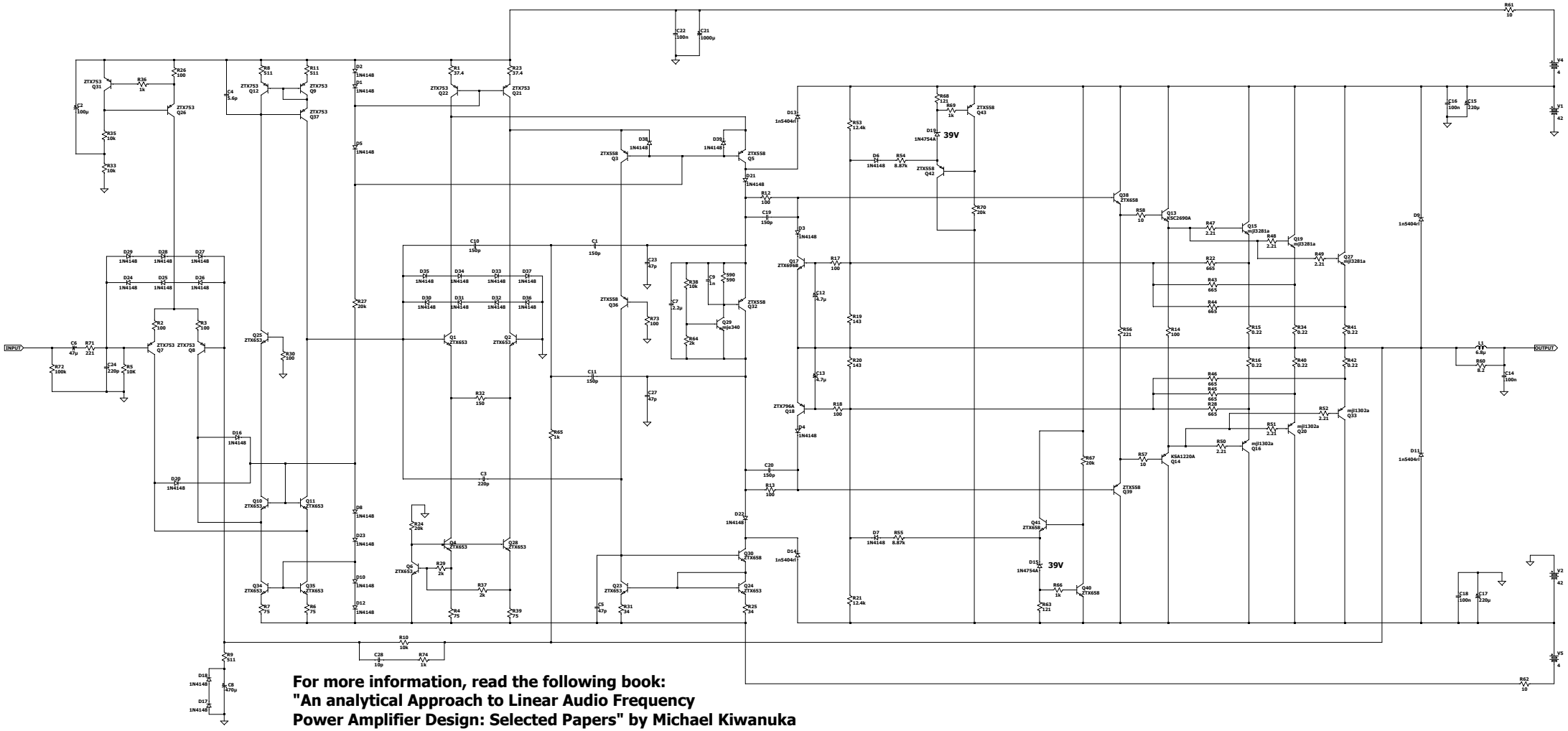

For more information, read the following book:
"An analytical Approach to Linear Audio Frequency Power Amplifier Design: Selected Papers" by Michael Kiwanuka

--- C:\Users\micha\OneDrive\Desktop\Michael Kiwanuka's signature power amplifier 01.asc ---