PROPRIETARY NOTE
THIS DRAWING CONTAINS INFORMATION THAT IS PROPRIETARY TO LUC/INTEGRATED POWER TECH. AND SHOULD NOT BE USED OR REPRODUCED WITHOUT WRITTEN PERMISSION

COMPONENT	VALUE CHART TAP 006	TAP 007
[redacted]		
R20	2.32 K	1.5 K
R8	4.32 K	3.01 K

REVISIONS				
ZONE	ECN	LTR	DESCRIPTION	DATE
—	—	A	PROTOTYPE	
—	446	B	SEE ECN	
—	447	C	SEE ECN	
—	—	D	R24 FROM [illegible] TO 45.5K	
		E	ADDED R8 TO CHART △5 R8 REMOVED VALUE ADDED △6 ADDED △5 WHERE NEEDED	

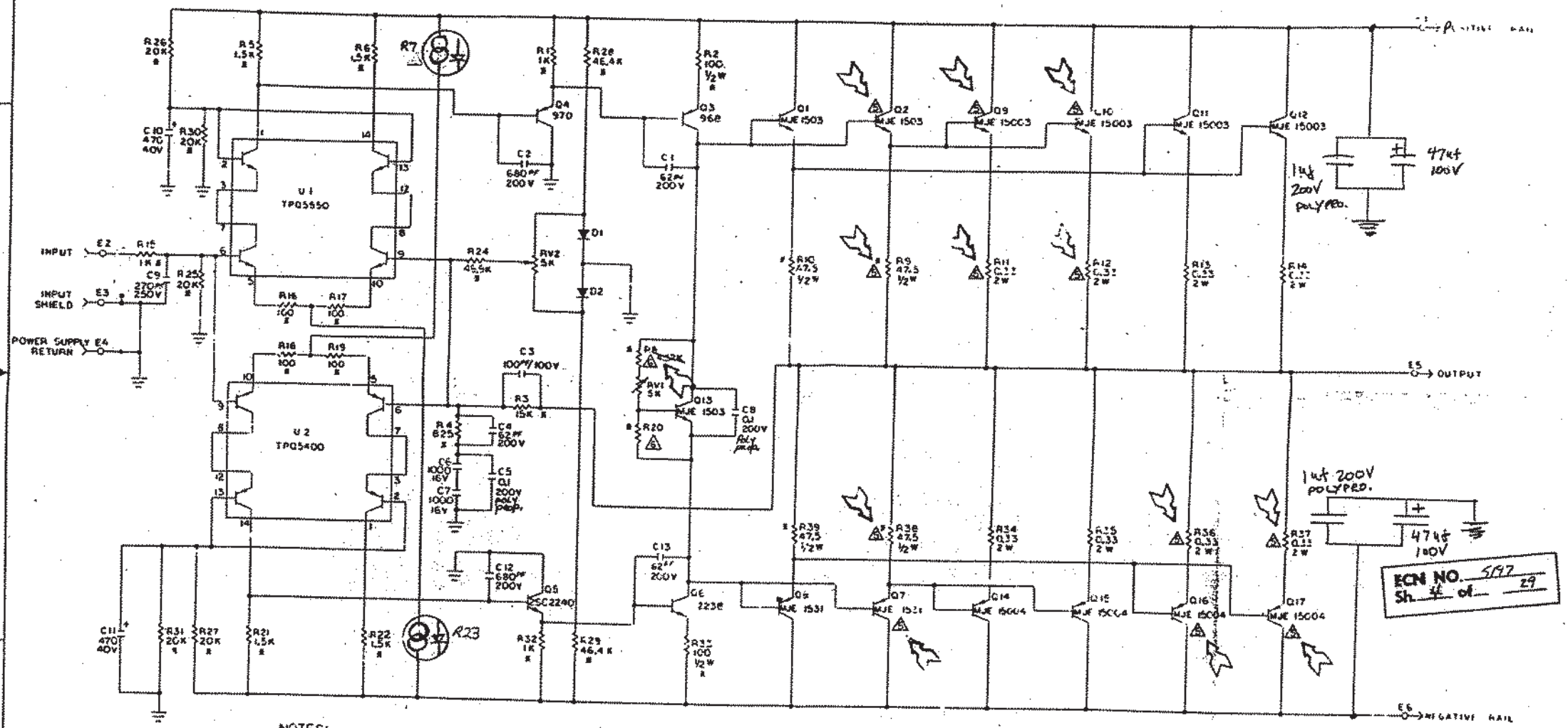

NOTES:
1. UNLESS OTHER SPECIFIED:
A) ALL RESISTORS ARE 1/4W, 5% CF
B) ALL RESISTANCE IS IN OHMS
C) ALL DIODES ARE 1N4148
D) ALL CAPACITANCE IS IN MICROFARADS
2. ✱ INDICATES 1/4W, 1% RESISTORS
3. ▲ INDICATES POLYPROP CAPACITORS
4. THERE ARE NO FOURWAY TIES
△5 THESE COMPONENTS ARE NOT USED ON TAP006 (100W)

△6 FOR VALUES SEE CHART

HIGHEST REFERENCE DESIGNATIONS						
C	D	H	E	Q	U	RV
13	2	39	6	17	2	2
REFERENCE DESIGNATIONS NOT USED						

APPROVALS	
DRAWN G-AG	11/25/87
CHECKED	9/6/87
APPROVED	9/6/87

4004-2004

SCHEMATIC DRIVER / OUTPUT

D 095D079-00

TAP 006/007