DWG. NO.	SHT	REV:
990-192-00	1	B

ECO#	REV:	DESCRIPTION	REV. BY:	APP. BY:	DATE
	A	RELEASE TO PRODUCTION	TH		9-30-98
2103 2125	B	ADD RESISTOR R35 (140-123-00) TO BOM CHANGE TEST POINTS FROM 10MIL ROUND TO 65MIL SQUARE REMOVE WIRE (609-000-00)	WGW		1-6-99

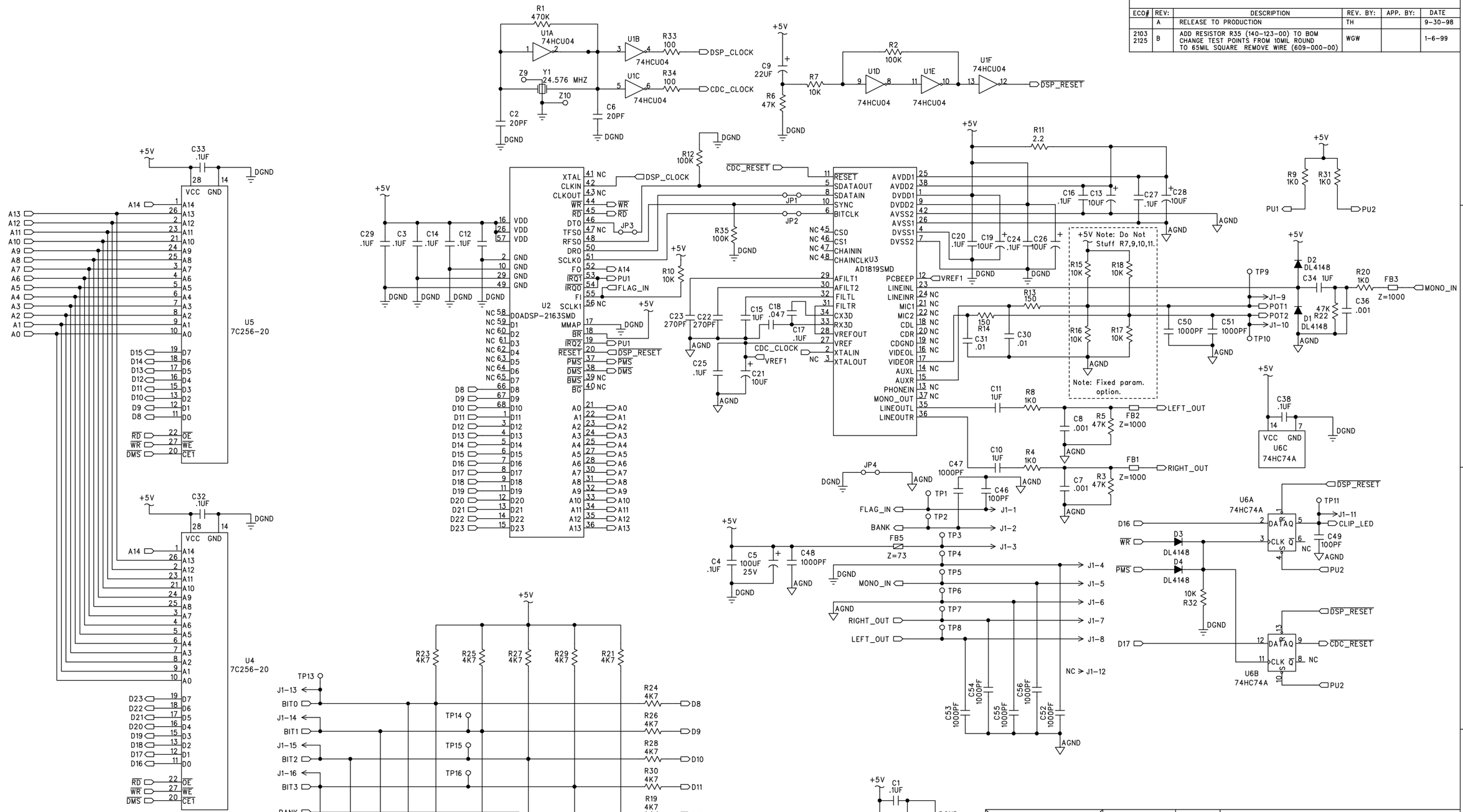

609-000-00
WIRE, BARE, SOLID #26 AWG 2"

450-192-00
PCB, LC EFFECTS

UNLESS OTHERWISE SPECIFIED DIMENSIONS ARE IN INCHES
TOLERANCES ARE:
FRACTIONS: ±NA DECIMALS: .XX ±.01 .XXX ±.005 ANGLES: ±NA

MATERIAL: SEE NOTES

FINISH: SEE NOTES

DO NOT SCALE DRAWING

APPROVALS		DATE
DRAWN:	Jeff Sondermeyer	1-9-98
CHECKED:		
NP ENG:	Jeff Sondermeyer	11-19-98
MATERIAL:		
MFG:		
MFG ENG:		
ISSUED:	PATTI C	11-19-98

MACKIE.
Mackie Designs Inc. Woodinville, Wa.

EFFECTS

SIZE	SCALE:	DWG. NO.	REV.
D	NONE	990-192-00	B

DWG FILE:

SHEET 1 OF 1

DWG. NO.	SHT	REV:
990-224-00	1	A

ECO#	REV:	DESCRIPTION	REV. BY:	APP. BY:	DATE
	A	RELEASED TO PRODUCTION	TH		11-19-98

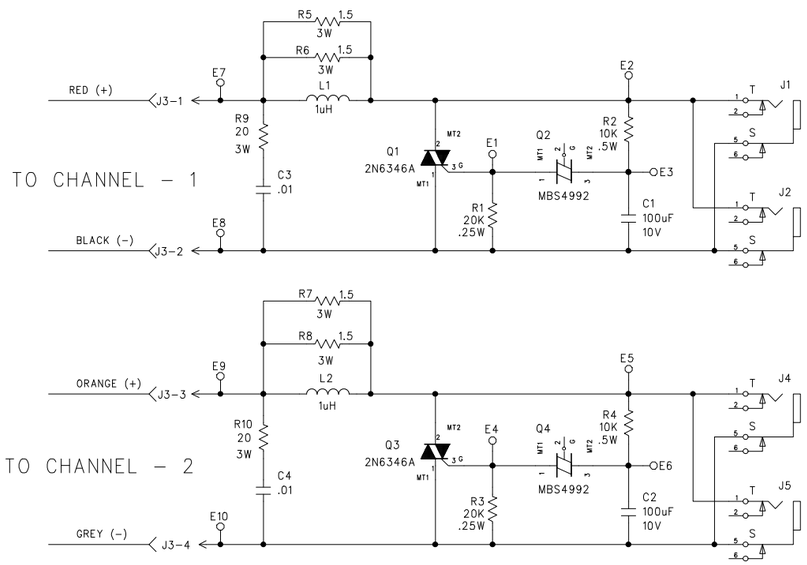

450-224-00
POWERED MIXER JACK BOARD

UNLESS OTHERWISE SPECIFIED DIMENSIONS ARE IN INCHES
TOLERANCES ARE:
FRACTIONS: ±NA DECIMALS: .XX ±.01 .XXX ±.005 ANGLES: ±NA

MATERIAL: SEE NOTES

FINISH: SEE NOTES

DO NOT SCALE DRAWING

APPROVALS		DATE
DRAWN:	wgw	7-16-98
CHECKED:		
NP ENG:		
MATERIAL:		
MFG:		
MFG ENG:		
ISSUED:		

MACKIE.
Mackie Designs Inc. Woodinville, Wa.

SCHEMATIC, POWERED MIXER JACK

SIZE	SCALE:	DWG. NO.	REV.
D	NONE	990-224-00	A

DWG FILE:

SHEET 1 OF 1

DWG. NO.	SHT	REV:
990-252-00	1	A

ECO#	REV:	DESCRIPTION	REV. BY:	APP. BY:	DATE
	A	RELEASE TO PRODUCTION	TH		1-6-99

VERSION	FUSE USED (F1)	FUSE VALUE LABEL
PM-808 100VAC	15A SLO-BLO 250V 510-018-00	NOT NEEDED
PM-808 120VAC	15A SLO-BLO 250V 510-018-00	NOT NEEDED
PM-808 240VAC	6.25A SLO-BLO 250V 510-047-00	840-198-00

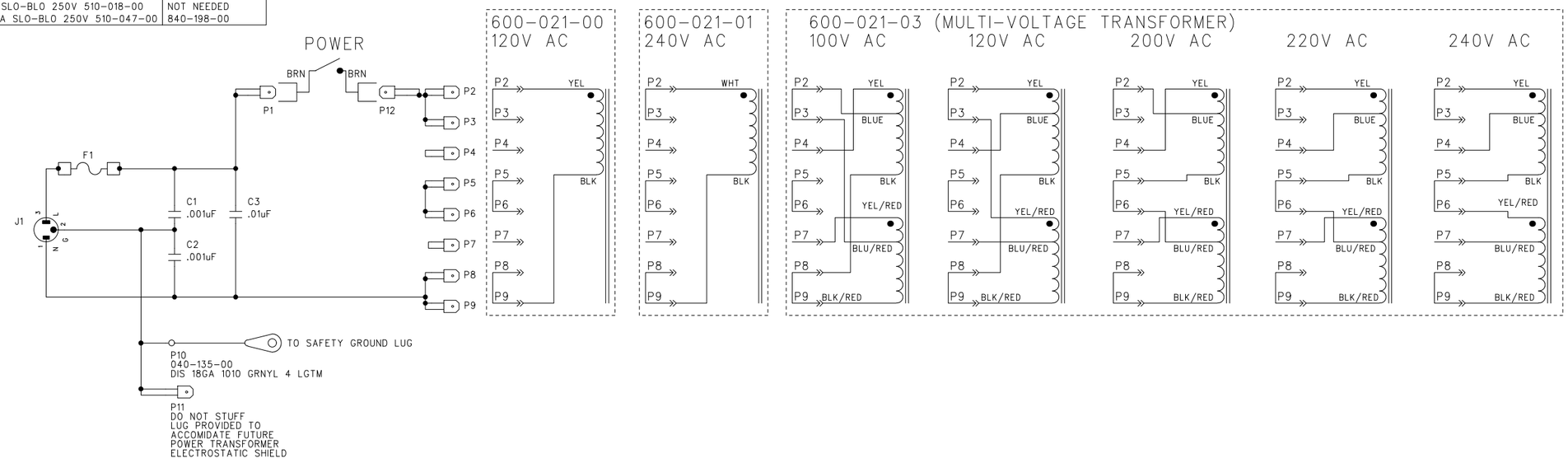

☐ 400-129-00
FUSE CLIP 0.25 DIA PC MNT

☐ 450-252-00
PCB AC INPUT 800W PM

UNLESS OTHERWISE SPECIFIED DIMENSIONS ARE IN INCHES
TOLERANCES ARE:
FRACTIONS: ±NA DECIMALS: .XX ±.01 .XXX ±.005 ANGLES: ±NA

MATERIAL: SEE NOTES

FINISH: SEE NOTES

DO NOT SCALE DRAWING

APPROVALS	DATE
DRAWN: wgw	7-20-98
CHECKED:	
NP ENG:	
MATERIAL:	
MFG:	
MFG ENG:	
ISSUED:	

MACKIE.
Mackie Designs Inc. Woodinville, Wa.

SCHEMATIC
800W POWERED MIXER
AC POWER INPUT

SIZE	SCALE:	DWG. NO.	REV.
D	NONE	990-252-00	A

DWG FILE:

SHEET 1 OF 1

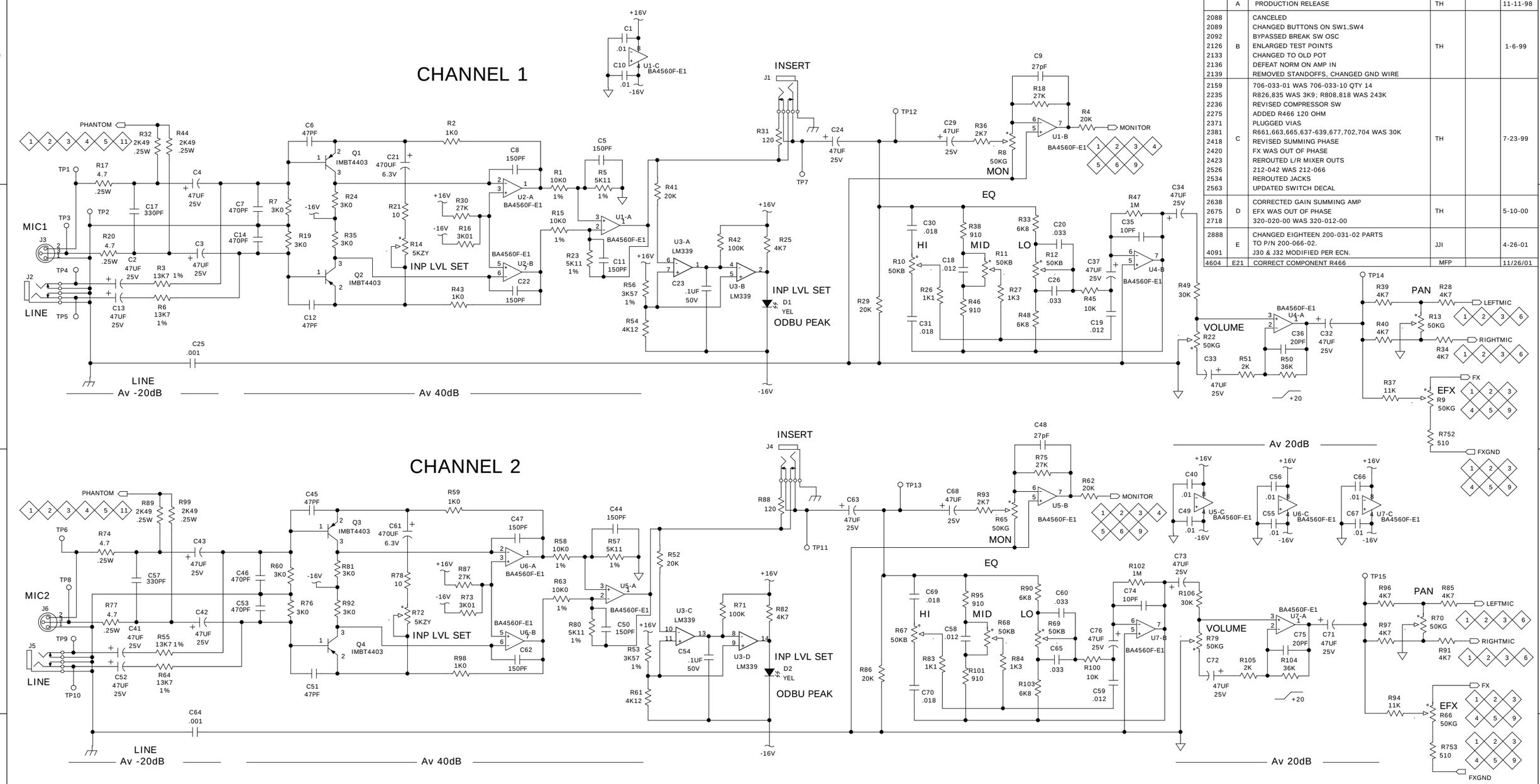

DWG. NO.	SHT	REV:

ECO#	REV:	DESCRIPTION	REV. BY:	APP. BY:	DATE
	A	PRODUCTION RELEASE	TH		11-11-98
2088	B	CANCELED	TH		1-6-99
2089		CHANGED BUTTONS ON SW1,SW4			
2092		BYPASSED BREAK SW OSC			
2126		ENLARGED TEST POINTS			
2133		CHANGED TO OLD POT			
2136		DEFEAT NORM ON AMP IN			
2139		REMOVED STANDOFFS, CHANGED GND WIRE			
2159	C	706-033-01 WAS 706-033-10 QTY 14	TH		7-23-99
2235		R826,835 WAS 3K9; R808,818 WAS 243K			
2236		REVISED COMPRESSOR SW			
2275		ADDED R466 120 OHM			
2371		PLUGGED VIAS			
2381		R661,663,665,637-639,677,702,704 WAS 30K			
2418		REVISED SUMMING PHASE			
2420		FX WAS OUT OF PHASE			
2423		REROUTED L/R MIXER OUTS			
2526		212-042 WAS 212-066			
2534		REROUTED JACKS			
2563		UPDATED SWITCH DECAL			
2638	D	CORRECTED GAIN SUMMING AMP	TH		5-10-00
2675		EFX WAS OUT OF PHASE			
2718		320-020-00 WAS 320-012-00			
2888	E	CHANGED EIGHTEEN 200-031-02 PARTS TO P/N 200-066-02.	JJI		4-26-01
4091		J30 & J32 MODIFIED PER ECN.			
4604	E21	CORRECT COMPONENT R466	MFP		11/26/01

706-038-00
STDF NO.4 X .250L

706-033-01
STDF SWAGE NO.4 X .542L F

450-194-00
PCB, 408S/808S MAIN

BSW1 760-109-01
BTN 2 COLOR 9X5 MM W/EXT

BSW2 760-109-01
BTN 2 COLOR 9X5 MM W/EXT

BSW3 760-107-01
BTN 2 COLOR 9X5MM

BSW4 760-107-01
BTN 2 COLOR 9X5MM

BSW5 760-107-01
BTN 2 COLOR 9X5MM

BSW6 760-107-01
BTN 2 COLOR 9X5MM

BSW7 760-109-01
BTN 2 COLOR 9X5MM

BSW8 760-107-01
BTN 2 COLOR 9X5MM

UNLESS OTHERWISE SPECIFIED DIMENSIONS ARE IN INCHES
TOLERANCES ARE:
FRACTIONS: ± NA DECIMALS: .XX ± .01 .XXX ± .005 ANGLES: ± NA

MATERIAL: SEE NOTES

FINISH: SEE NOTES

DO NOT SCALE DRAWING

APPROVALS		DATE
DRAWN:	trh	4-1-98
CHECKED:		
NP ENG:	CJM	11-20-98
MATERIAL:		
MFG:		
MFG ENG:	CB	11-20-98
ISSUED:	LV	11-20-98

MACKIE.
Mackie Designs Inc. Woodinville, Wa.

SCHEMATIC, MIXER BOARD 408S/808S
MIC CHANNELS 1&2

SIZE D | SCALE: NONE | DWG. NO. SCH 055-194-00-03 | REV. E29

DWG FILE: | SHEET 1 OF 11

DWG. NO.	SHT	REV:

ECO#	REV:	DESCRIPTION	REV. BY:	APP. BY:	DATE

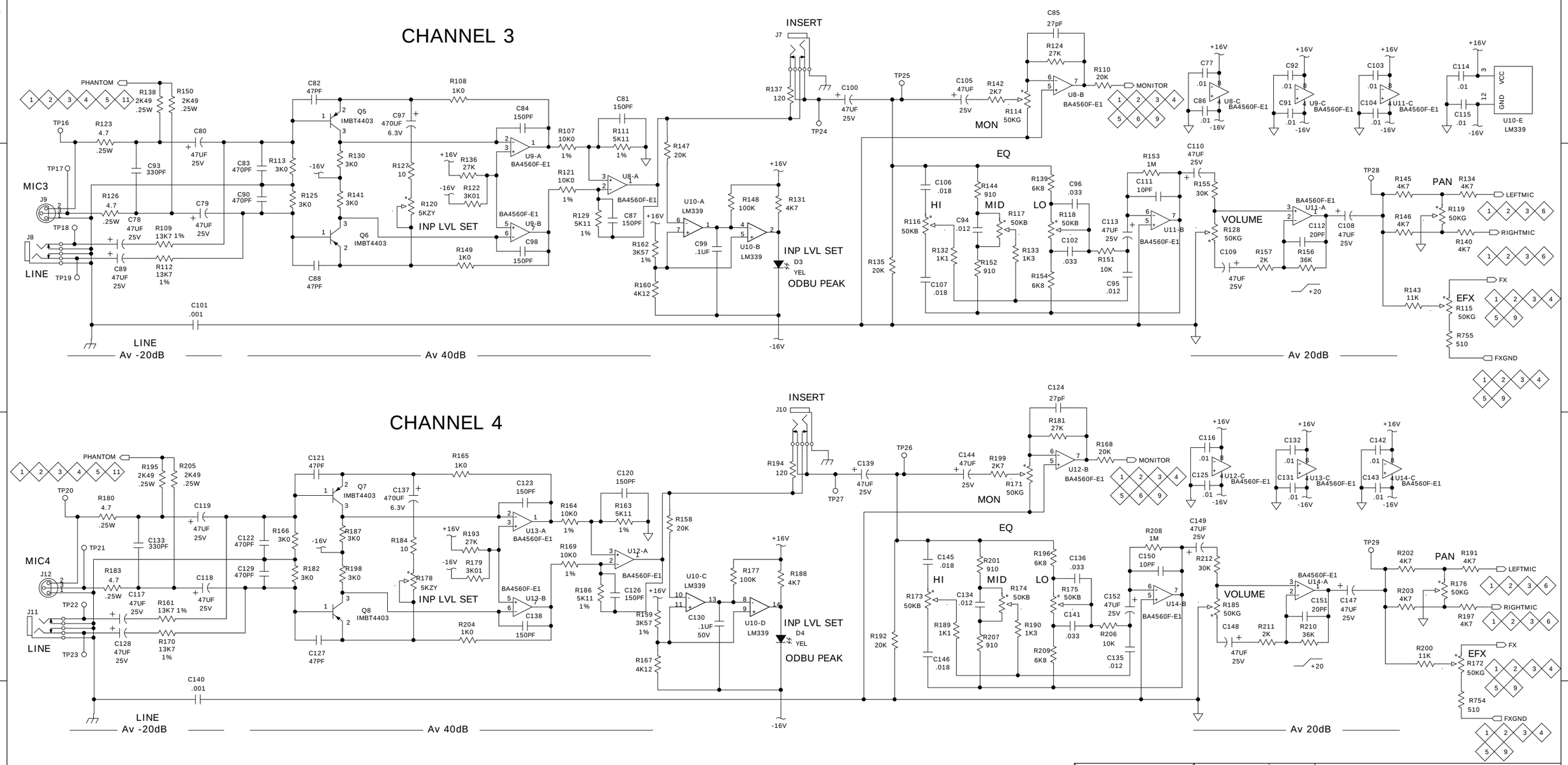

UNLESS OTHERWISE SPECIFIED DIMENSIONS ARE IN INCHES
TOLERANCES ARE:
FRACTIONS: ± NA DECIMALS: .XX ± .01 .XXX ± .005 ANGLES: ± NA

MATERIAL: SEE NOTES

FINISH: SEE NOTES

DO NOT SCALE DRAWING

APPROVALS	DATE
DRAWN:	
CHECKED:	
NP ENG:	
MATERIAL:	
MFG:	
MFG ENG:	
ISSUED:	

MACKIE.
Mackie Designs Inc. Woodinville, Wa.

SCHEMATIC, MIXER BOARD 408S/808S
MIC CHANNELS 3&4

SIZE	SCALE:	DWG. NO.	REV.
D	NONE	SCH 055-194-00-03	E29

DWG FILE: SHEET 2 OF 11

DWG. NO.	SHT	REV:

ECO#	REV:	DESCRIPTION	REV. BY:	APP. BY:	DATE

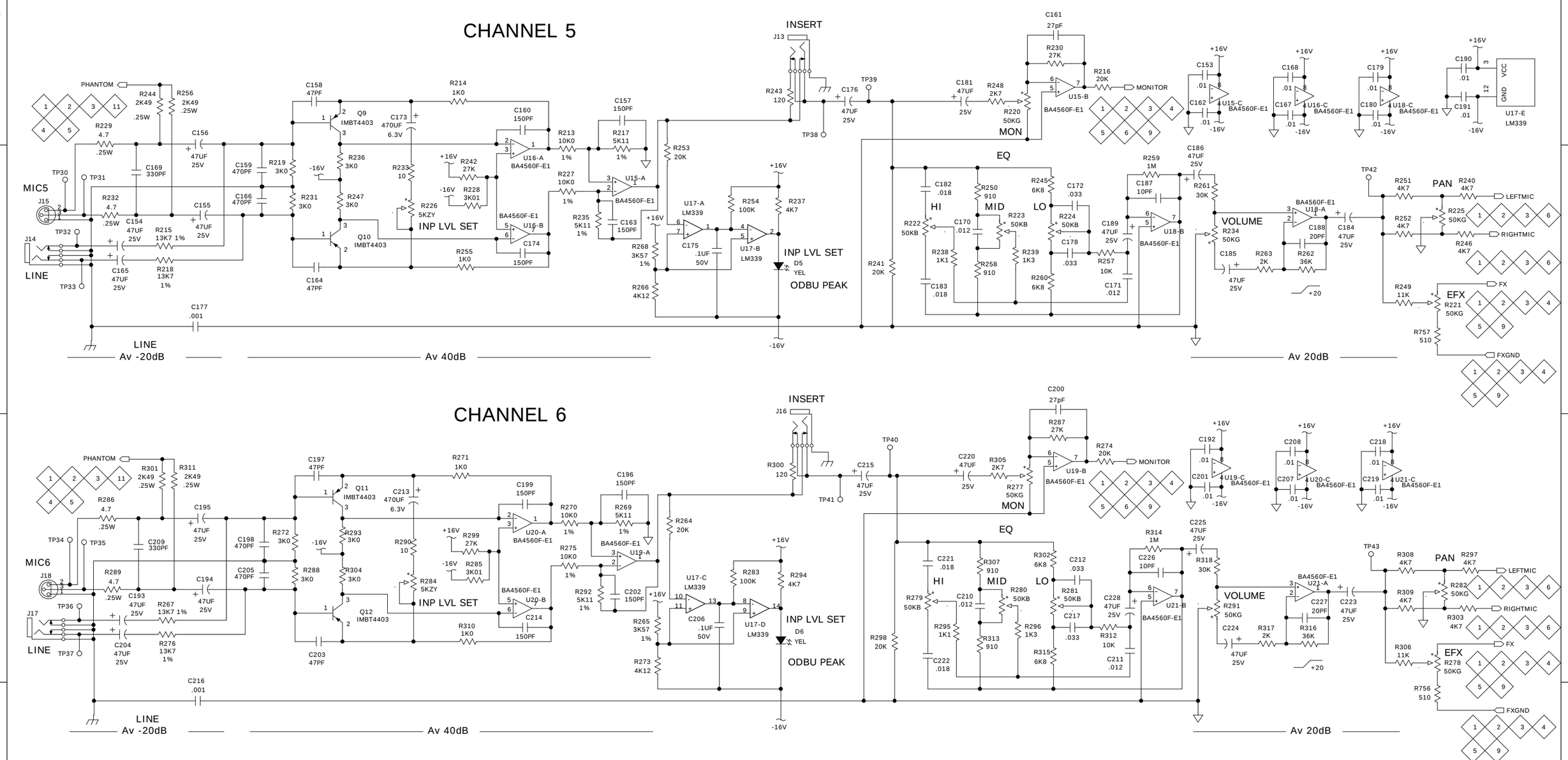

UNLESS OTHERWISE SPECIFIED DIMENSIONS ARE IN INCHES TOLERANCES ARE:	APPROVALS	DATE
FRACTIONS: ± NA DECIMALS: .XX ± .01 .XXX ± .005 ANGLES: ± NA	DRAWN:	
	CHECKED:	
	NP ENG:	
MATERIAL: SEE NOTES	MATERIAL:	
	MFG:	
FINISH: SEE NOTES	MFG ENG:	
DO NOT SCALE DRAWING	ISSUED:	

MACKIE.
Mackie Designs Inc. Woodinville, Wa.

SCHEMATIC, MIXER BOARD 408S/808S
MIC CHANNELS 5&6

SIZE	SCALE:	DWG. NO.	REV.
D	NONE	SCH 055-194-00-03	E29

DWG FILE: SHEET 3 OF 11

DWG. NO.	SHT	REV:

ECO#	REV:	DESCRIPTION	REV. BY:	APP. BY:	DATE

CHANNEL 7

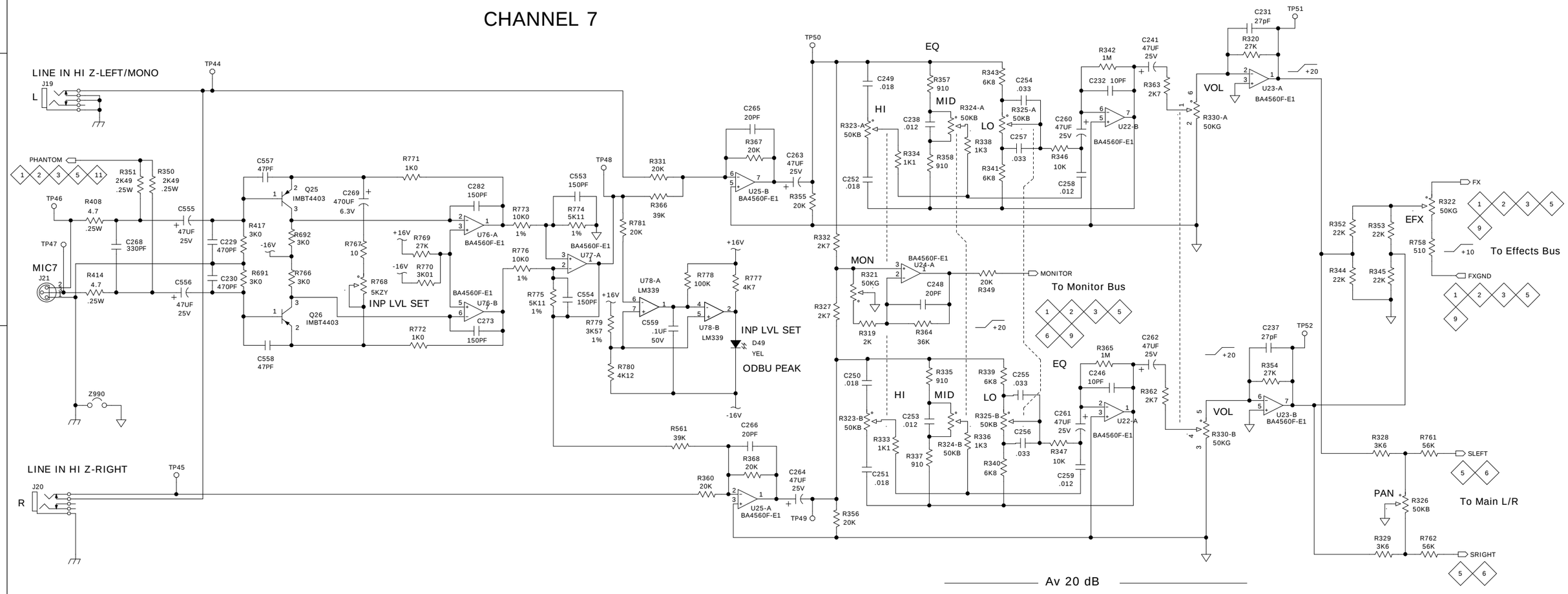

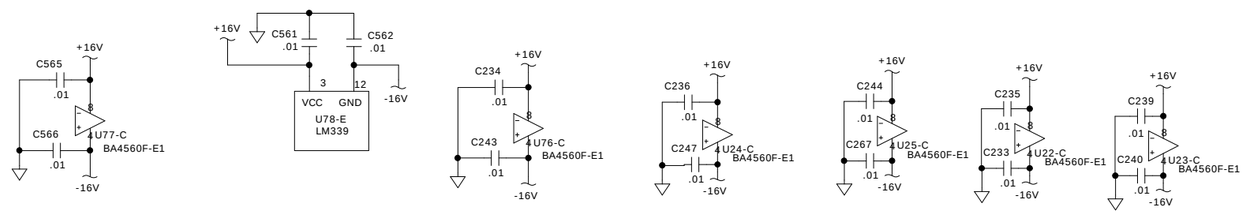

UNLESS OTHERWISE SPECIFIED DIMENSIONS ARE IN INCHES TOLERANCES ARE: FRACTIONS: ± NA DECIMALS: .XX ± .01 .XXX ± .005 ANGLES: ± NA	APPROVALS	DATE
	DRAWN:	
	CHECKED:	
	NP ENG:	
MATERIAL: SEE NOTES	MATERIAL:	
	MFG:	
FINISH: SEE NOTES	MFG ENG:	
DO NOT SCALE DRAWING	ISSUED:	

MACKIE.
Mackie Designs Inc. Woodinville, Wa.

SCHEMATIC, MIXER BOARD 408S/808S
STEREO/MIC CHANNEL 7

SIZE	SCALE:	DWG. NO.	REV.
D	NONE	SCH 055-194-00-03	E29

DWG FILE: SHEET 4 OF 11

DWG. NO.	SHT	REV:

ECO#	REV:	DESCRIPTION	REV. BY:	APP. BY:	DATE

CHANNEL 8

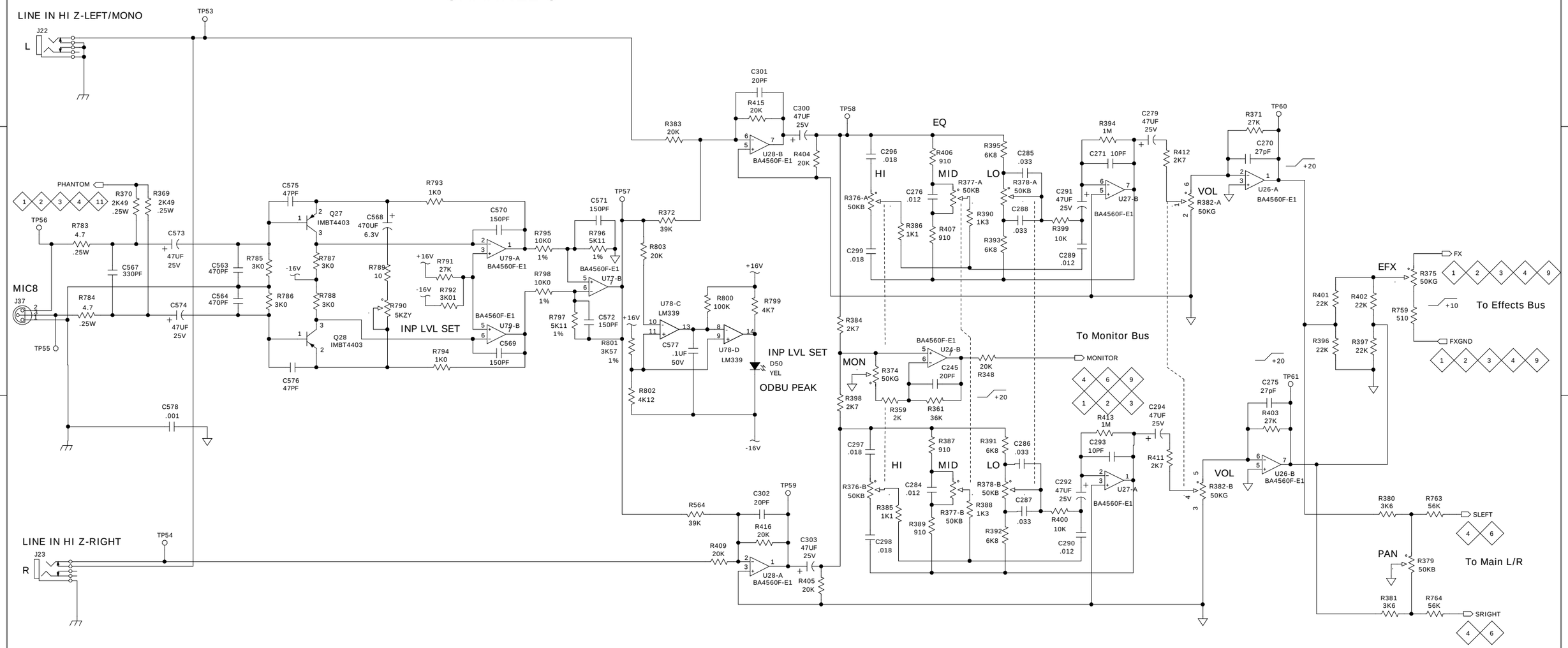

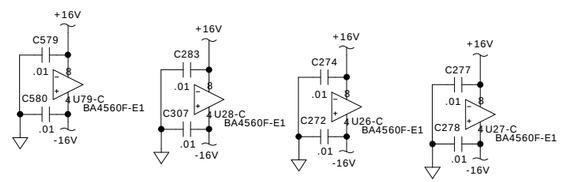

UNLESS OTHERWISE SPECIFIED DIMENSIONS ARE IN INCHES TOLERANCES ARE: FRACTIONS ± NA DECIMALS: .XX ± .01 .XXX ± .005 ANGLES: ± NA	APPROVALS	DATE
	DRAWN:	
	CHECKED:	
MATERIAL: SEE NOTES	NP ENG:	
	MATERIAL:	
FINISH: SEE NOTES	MFG:	
	MFG ENG:	
DO NOT SCALE DRAWING	ISSUED:	

MACKIE.
Mackie Designs Inc. Woodinville, Wa.

SCHEMATIC, MIXER BOARD 408S/808S
STEREO/MIC CHANNEL 8

SIZE	SCALE:	DWG. NO.	REV.
D	NONE	SCH 055-194-00-03	E29

DWG FILE: SHEET 5 OF 11

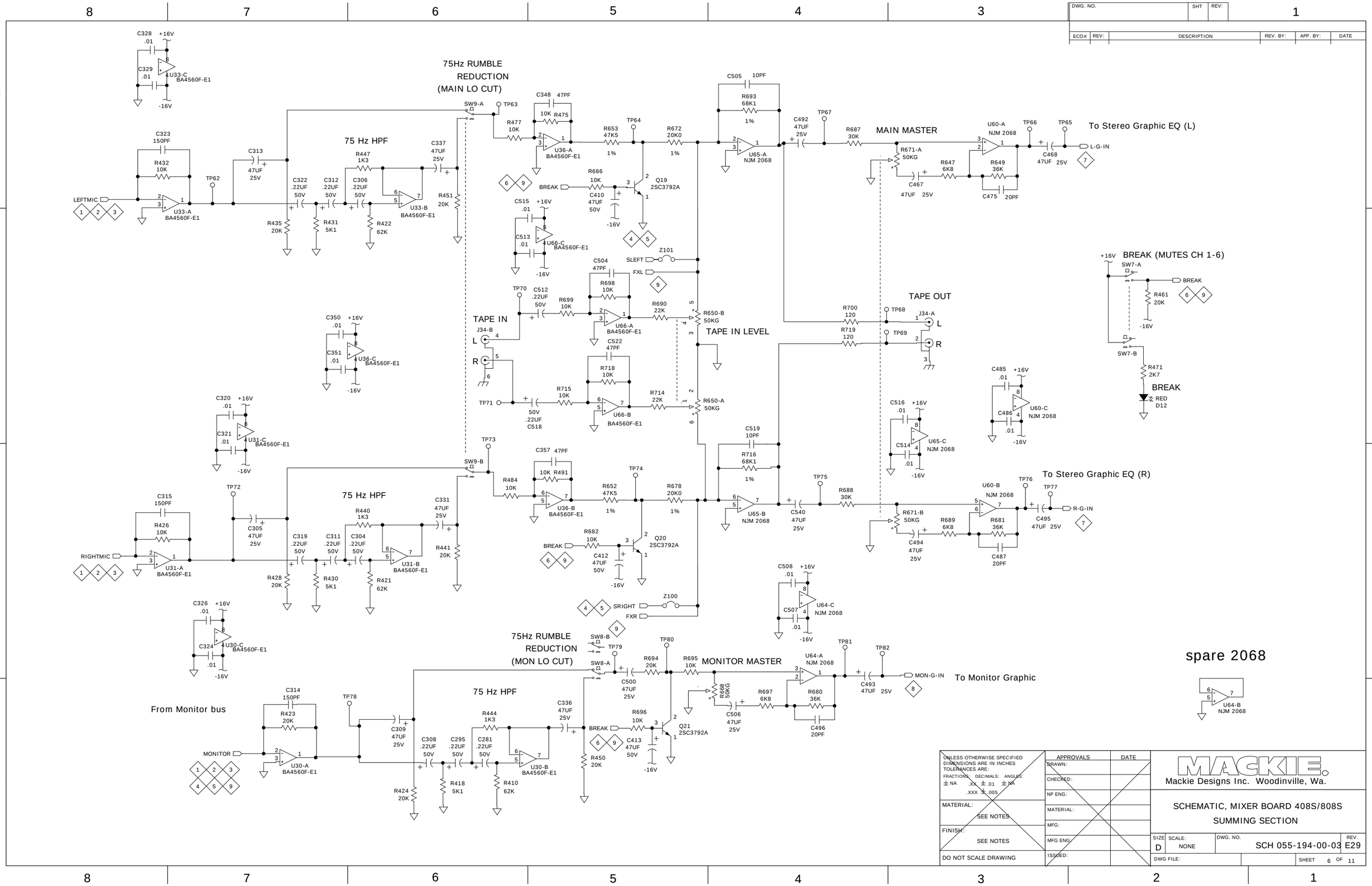
75Hz RUMBLE REDUCTION (MAIN LO CUT)
75 Hz HPF
MAIN MASTER
To Stereo Graphic EQ (L)
LEFTMIC
U33-A BA4560F-E1
U33-B BA4560F-E1
U33-C BA4560F-E1
U36-A BA4560F-E1
U65-A NJM 2068
U60-A NJM 2068
U60-C NJM 2068
U65-C NJM 2068
U66-A BA4560F-E1
U66-B BA4560F-E1
U66-C BA4560F-E1
Q19 2SC3792A
TAPE IN
TAPE IN LEVEL
TAPE OUT
BREAK (MUTES CH 1-6)
BREAK
RED D12
75Hz RUMBLE REDUCTION (MON LO CUT)
75 Hz HPF
MONITOR MASTER
To Stereo Graphic EQ (R)
RIGHTMIC
U31-A BA4560F-E1
U31-B BA4560F-E1
U31-C BA4560F-E1
U36-B BA4560F-E1
U65-B NJM 2068
U60-B NJM 2068
U64-A NJM 2068
U64-B NJM 2068
U64-C NJM 2068
Q20 2SC3792A
Q21 2SC3792A
From Monitor bus
MONITOR
U30-A BA4560F-E1
U30-B BA4560F-E1
U30-C BA4560F-E1
To Monitor Graphic
spare 2068
SRIGHT
FXR
SLEFT
FXL
L-G-IN
R-G-IN
MON-G-IN
DWG. NO.
SHT
REV:
ECO#
DESCRIPTION
REV. BY:
APP. BY:
DATE
UNLESS OTHERWISE SPECIFIED DIMENSIONS ARE IN INCHES TOLERANCES ARE:
FRACTIONS: ±NA DECIMALS: .XX ±.01 .XXX ±.005 ANGLES: ±NA
MATERIAL: SEE NOTES
FINISH: SEE NOTES
DO NOT SCALE DRAWING
APPROVALS
DATE
DRAWN:
CHECKED:
NP ENG:
MATERIAL:
MFG:
MFG ENG:
ISSUED:
MACKIE.
Mackie Designs Inc. Woodinville, Wa.
SCHEMATIC, MIXER BOARD 408S/808S
SUMMING SECTION
SIZE D
SCALE: NONE
DWG. NO. SCH 055-194-00-03
REV. E29
DWG FILE:
SHEET 6 OF 11

MAIN-STEREO/MONO EQUALIZER

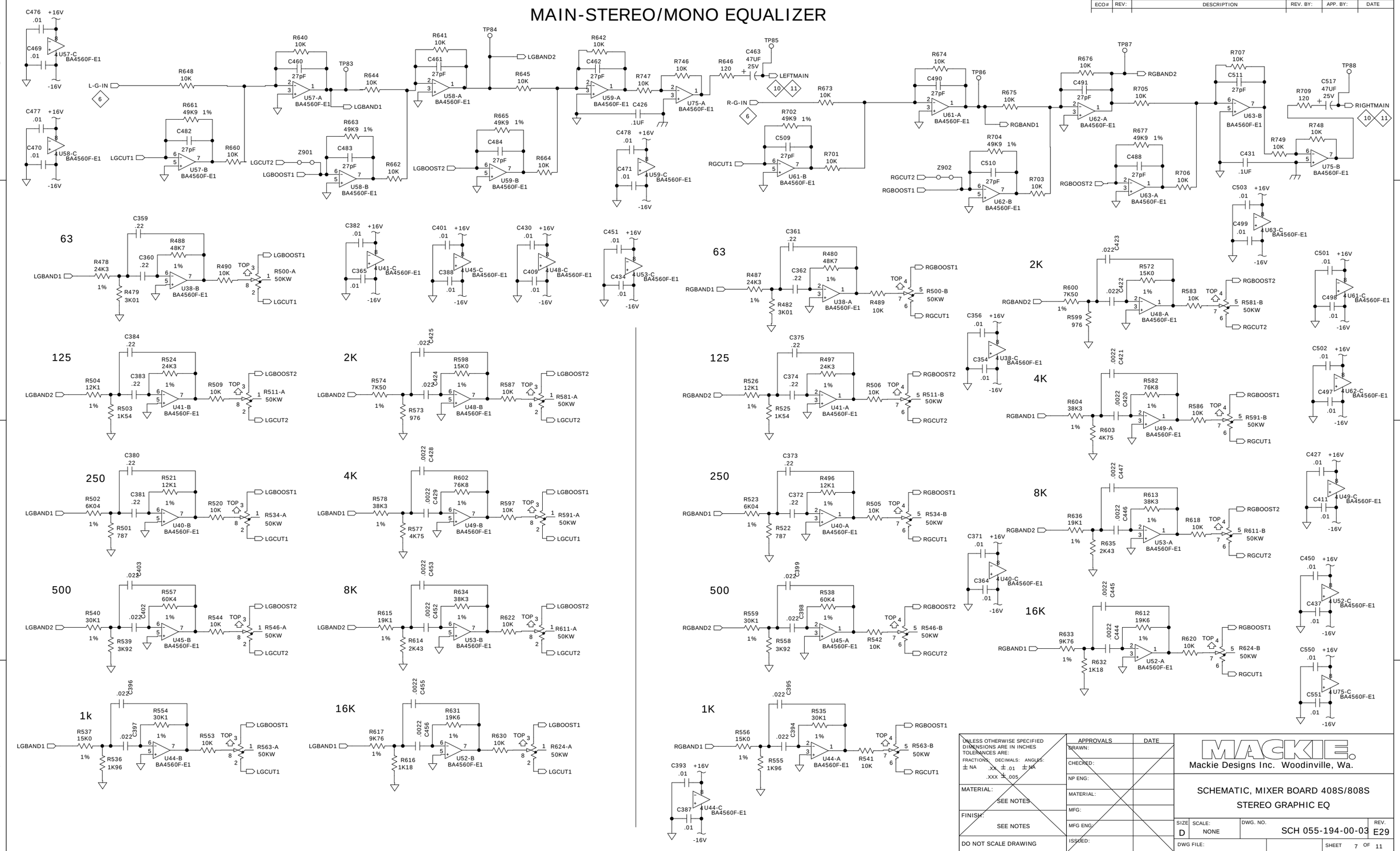

DWG. NO.	SHT	REV:

ECO#	REV:	DESCRIPTION	REV. BY:	APP. BY:	DATE

UNLESS OTHERWISE SPECIFIED DIMENSIONS ARE IN INCHES
TOLERANCES ARE:
FRACTIONS: ± NA DECIMALS: .XX ± .01 .XXX ± .005 ANGLES: ± NA

MATERIAL: SEE NOTES

FINISH: SEE NOTES

DO NOT SCALE DRAWING

APPROVALS	DATE
DRAWN:	
CHECKED:	
NP ENG:	
MATERIAL:	
MFG:	
MFG ENG:	
ISSUED:	

MACKIE.
Mackie Designs Inc. Woodinville, Wa.

SCHEMATIC, MIXER BOARD 408S/808S
STEREO GRAPHIC EQ

SIZE	SCALE:	DWG. NO.	REV.
D	NONE	SCH 055-194-00-03	E29

DWG FILE:

SHEET 7 OF 11

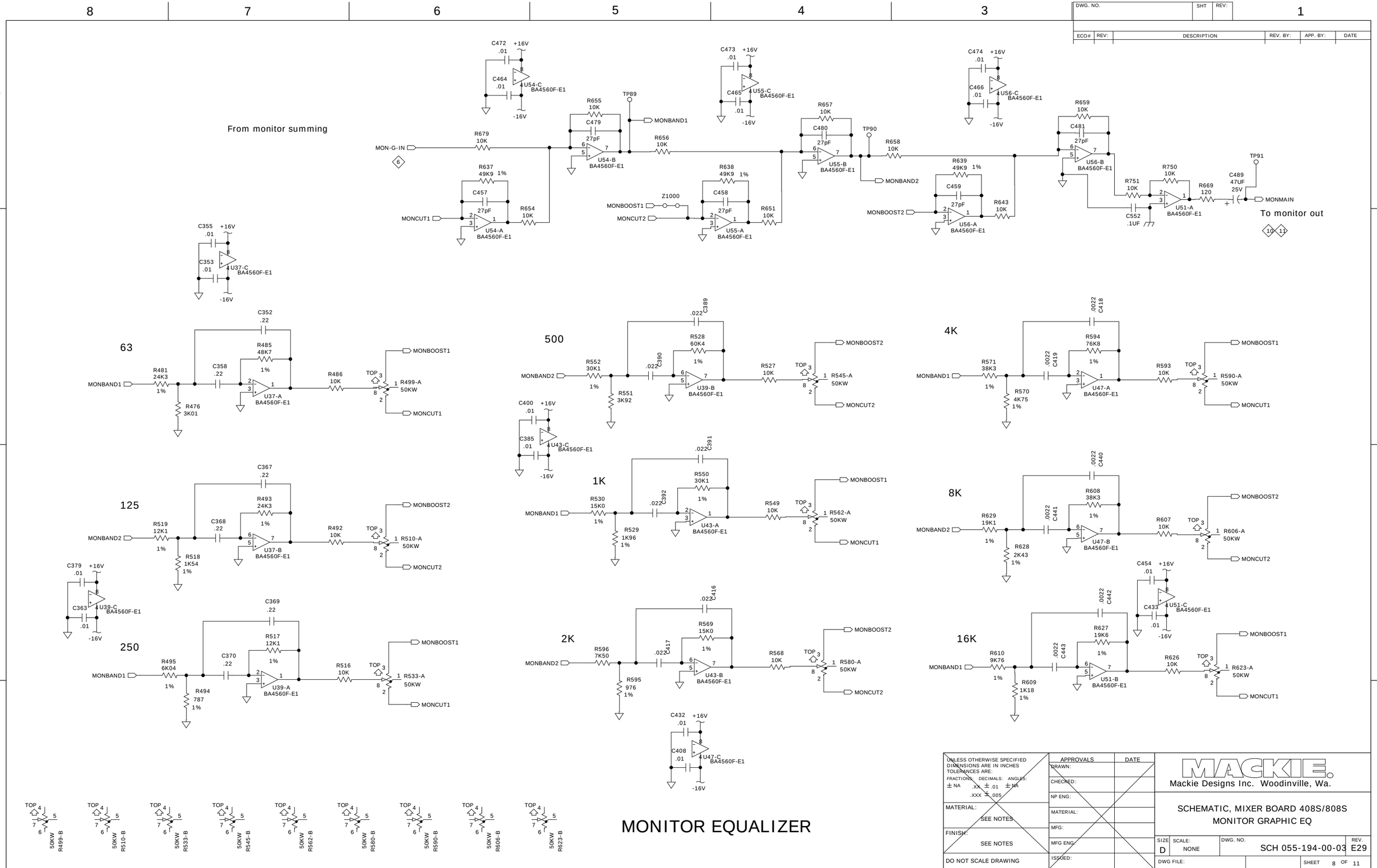
From monitor summing
MON-G-IN
6
R679 10K
R637 49K9 1%
C457 27pF
MONCUT1
U54-A BA4560F-E1
R654 10K
R655 10K
C479 27pF
U54-B BA4560F-E1
TP89
MONBAND1
R656 10K
R638 49K9 1%
C458 27pF
MONBOOST1
MONCUT2
Z1000
U55-A BA4560F-E1
R651 10K
R657 10K
C480 27pF
U55-B BA4560F-E1
TP90
R658 10K
MONBAND2
R639 49K9 1%
C459 27pF
MONBOOST2
U56-A BA4560F-E1
R643 10K
R659 10K
C481 27pF
U56-B BA4560F-E1
R751 10K
C552 .1UF
R750 10K
U51-A BA4560F-E1
R669 120
C489 47UF 25V
TP91
MONMAIN
To monitor out
10
11
C472 .01
C464 .01
U54-C BA4560F-E1
C473 .01
C465 .01
U55-C BA4560F-E1
C474 .01
C466 .01
U56-C BA4560F-E1
+16V
-16V
C355 .01
C353 .01
U37-C BA4560F-E1
63
MONBAND1
R481 24K3 1%
R476 3K01
C358 .22
C352 .22
R485 48K7 1%
U37-A BA4560F-E1
R486 10K
TOP
R499-A 50KW
MONBOOST1
MONCUT1
500
MONBAND2
R552 30K1 1%
R551 3K92
C390 .022
C389 .022
R528 60K4 1%
U39-B BA4560F-E1
R527 10K
R545-A 50KW
MONBOOST2
MONCUT2
C400 .01
C385 .01
U43-C BA4560F-E1
4K
MONBAND1
R571 38K3 1%
R570 4K75 1%
C419 .0022
C418 .0022
R594 76K8 1%
U47-A BA4560F-E1
R593 10K
R590-A 50KW
MONBOOST1
MONCUT1
125
MONBAND2
R519 12K1 1%
R518 1K54 1%
C368 .22
C367 .22
R493 24K3 1%
U37-B BA4560F-E1
R492 10K
R510-A 50KW
MONBOOST2
MONCUT2
C379 .01
C363 .01
U39-C BA4560F-E1
1K
MONBAND1
R530 15K0 1%
R529 1K96 1%
C392 .022
C391 .022
R550 30K1 1%
U43-A BA4560F-E1
R549 10K
R562-A 50KW
MONBOOST1
MONCUT1
8K
MONBAND2
R629 19K1 1%
R628 2K43 1%
C441 .0022
C440 .0022
R608 38K3 1%
U47-B BA4560F-E1
R607 10K
R606-A 50KW
MONBOOST2
MONCUT2
250
MONBAND1
R495 6K04 1%
R494 787 1%
C370 .22
C369 .22
R517 12K1 1%
U39-A BA4560F-E1
R516 10K
R533-A 50KW
MONBOOST1
MONCUT1
2K
MONBAND2
R596 7K50 1%
R595 976 1%
C417 .022
C416 .022
R569 15K0 1%
U43-B BA4560F-E1
R568 10K
R580-A 50KW
MONBOOST2
MONCUT2
C432 .01
C408 .01
U47-C BA4560F-E1
16K
MONBAND1
R610 9K76 1%
R609 1K18 1%
C443 .0022
C442 .0022
R627 19K6 1%
U51-B BA4560F-E1
C454 .01
C433 .01
U51-C BA4560F-E1
R626 10K
R623-A 50KW
MONBOOST1
MONCUT1
TOP
50KW R499-B
50KW R510-B
50KW R533-B
50KW R545-B
50KW R562-B
50KW R580-B
50KW R590-B
50KW R606-B
50KW R623-B
MONITOR EQUALIZER
UNLESS OTHERWISE SPECIFIED DIMENSIONS ARE IN INCHES TOLERANCES ARE:
FRACTIONS: ± NA
DECIMALS: .XX ± .01 .XXX ± .005
ANGLES: ± NA
MATERIAL: SEE NOTES
FINISH: SEE NOTES
DO NOT SCALE DRAWING
APPROVALS
DATE
DRAWN:
CHECKED:
NP ENG:
MATERIAL:
MFG:
MFG ENG:
ISSUED:
MACKIE
Mackie Designs Inc. Woodinville, Wa.
SCHEMATIC, MIXER BOARD 408S/808S
MONITOR GRAPHIC EQ
SIZE D
SCALE: NONE
DWG. NO. SCH 055-194-00-03
REV. E29
DWG FILE:
SHEET 8 OF 11
DWG. NO.
SHT
REV:
ECO#
REV:
DESCRIPTION
REV. BY:
APP. BY:
DATE

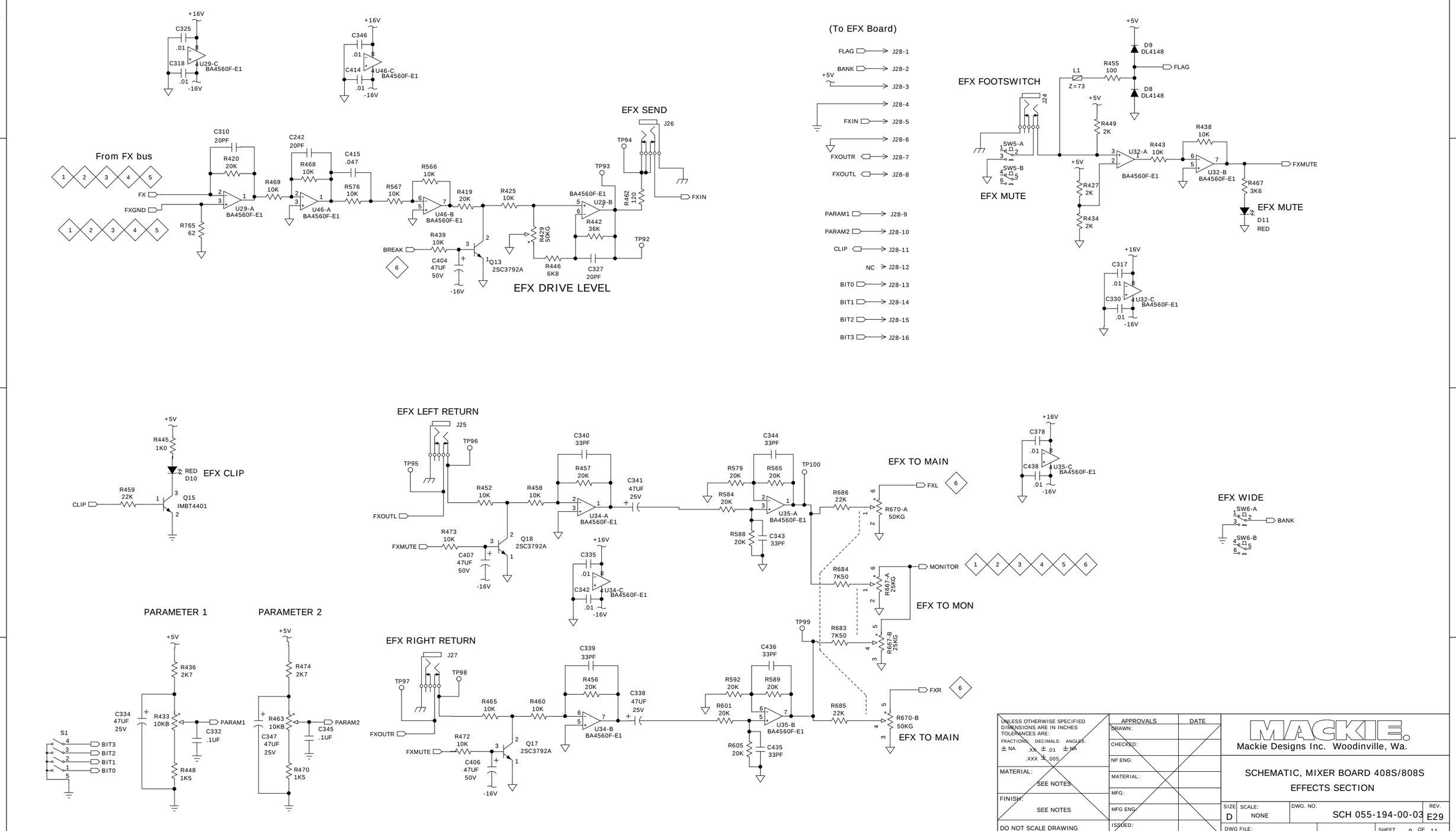
(To EFX Board)
FLAG J28-1
BANK J28-2
+5V J28-3
J28-4
FXIN J28-5
J28-6
FXOUTR J28-7
FXOUTL J28-8
PARAM1 J28-9
PARAM2 J28-10
CLIP J28-11
NC J28-12
BIT0 J28-13
BIT1 J28-14
BIT2 J28-15
BIT3 J28-16
From FX bus
FX
FXGND
U29-A BA4560F-E1
U29-C BA4560F-E1
U46-A BA4560F-E1
U46-B BA4560F-E1
U46-C BA4560F-E1
EFX SEND
J26
FXIN
BREAK
Q13 2SC3792A
EFX DRIVE LEVEL
EFX FOOTSWITCH
J24
SW5-A
SW5-B
EFX MUTE
D9 DL4148
D8 DL4148
FLAG
U32-A BA4560F-E1
U32-B BA4560F-E1
U32-C BA4560F-E1
FXMUTE
EFX MUTE
D11 RED
EFX CLIP
RED D10
Q15 IMBT4401
CLIP
EFX LEFT RETURN
J25
FXOUTL
FXMUTE
Q18 2SC3792A
U34-A BA4560F-E1
U34-C BA4560F-E1
U35-A BA4560F-E1
U35-C BA4560F-E1
EFX TO MAIN
FXL
EFX TO MON
MONITOR
EFX WIDE
SW6-A
SW6-B
BANK
PARAMETER 1
PARAMETER 2
S1
BIT3
BIT2
BIT1
BIT0
PARAM1
PARAM2
EFX RIGHT RETURN
J27
FXOUTR
FXMUTE
Q17 2SC3792A
U34-B BA4560F-E1
U35-B BA4560F-E1
EFX TO MAIN
FXR
DWG. NO.
SHT
REV:
ECO#
REV:
DESCRIPTION
REV. BY:
APP. BY:
DATE
UNLESS OTHERWISE SPECIFIED DIMENSIONS ARE IN INCHES TOLERANCES ARE:
FRACTIONS: ± NA DECIMALS: .XX ± .01 .XXX ± .005 ANGLES: ± NA
MATERIAL: SEE NOTES
FINISH: SEE NOTES
DO NOT SCALE DRAWING
APPROVALS
DATE
DRAWN:
CHECKED:
NP ENG:
MATERIAL:
MFG:
MFG ENG:
ISSUED:
MACKIE.
Mackie Designs Inc. Woodinville, Wa.
SCHEMATIC, MIXER BOARD 408S/808S
EFFECTS SECTION
SIZE D
SCALE: NONE
DWG. NO. SCH 055-194-00-03
REV. E29
DWG FILE:
SHEET 9 OF 11

DWG. NO.	SHT	REV:

ECO#	REV:	DESCRIPTION	REV. BY:	APP. BY:	DATE

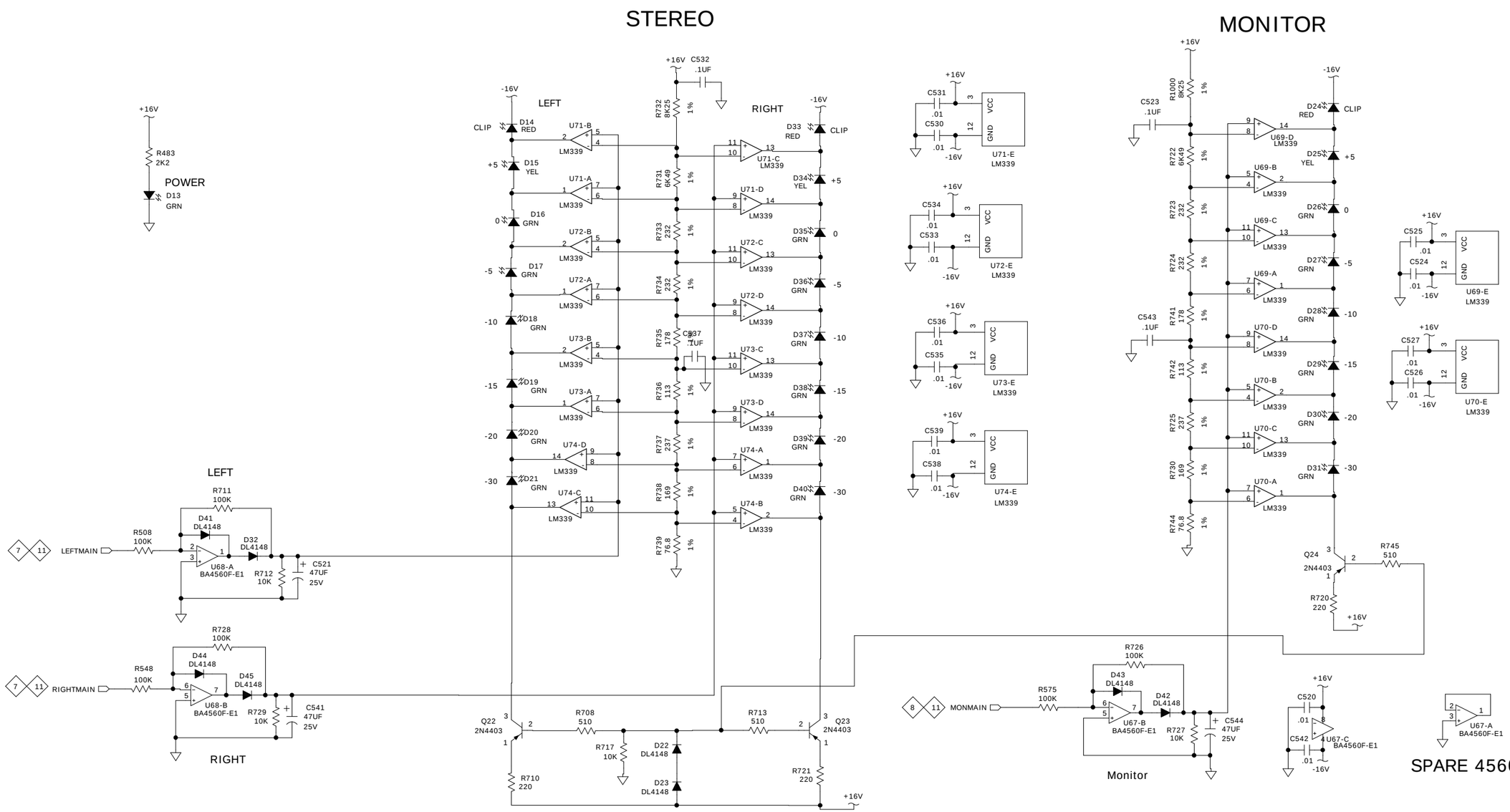

UNLESS OTHERWISE SPECIFIED DIMENSIONS ARE IN INCHES TOLERANCES ARE: FRACTIONS ± NA DECIMALS: .XX ± .01 .XXX ± .005 ANGLES: ± NA	APPROVALS	DATE
	DRAWN:	
	CHECKED:	
	NP ENG:	
MATERIAL: SEE NOTES	MATERIAL:	
	MFG:	
FINISH: SEE NOTES	MFG ENG:	
DO NOT SCALE DRAWING	ISSUED:	

MACKIE.
Mackie Designs Inc. Woodinville, Wa.

SCHEMATIC, MIXER BOARD 408S/808S
METER SECTION

SIZE	SCALE:	DWG. NO.	REV.
D	NONE	SCH 055-194-00-03	E29

DWG FILE: SHEET 10 OF 11

DWG. NO.	SHT	REV:

ECO#	REV:	DESCRIPTION	REV. BY:	APP. BY:	DATE

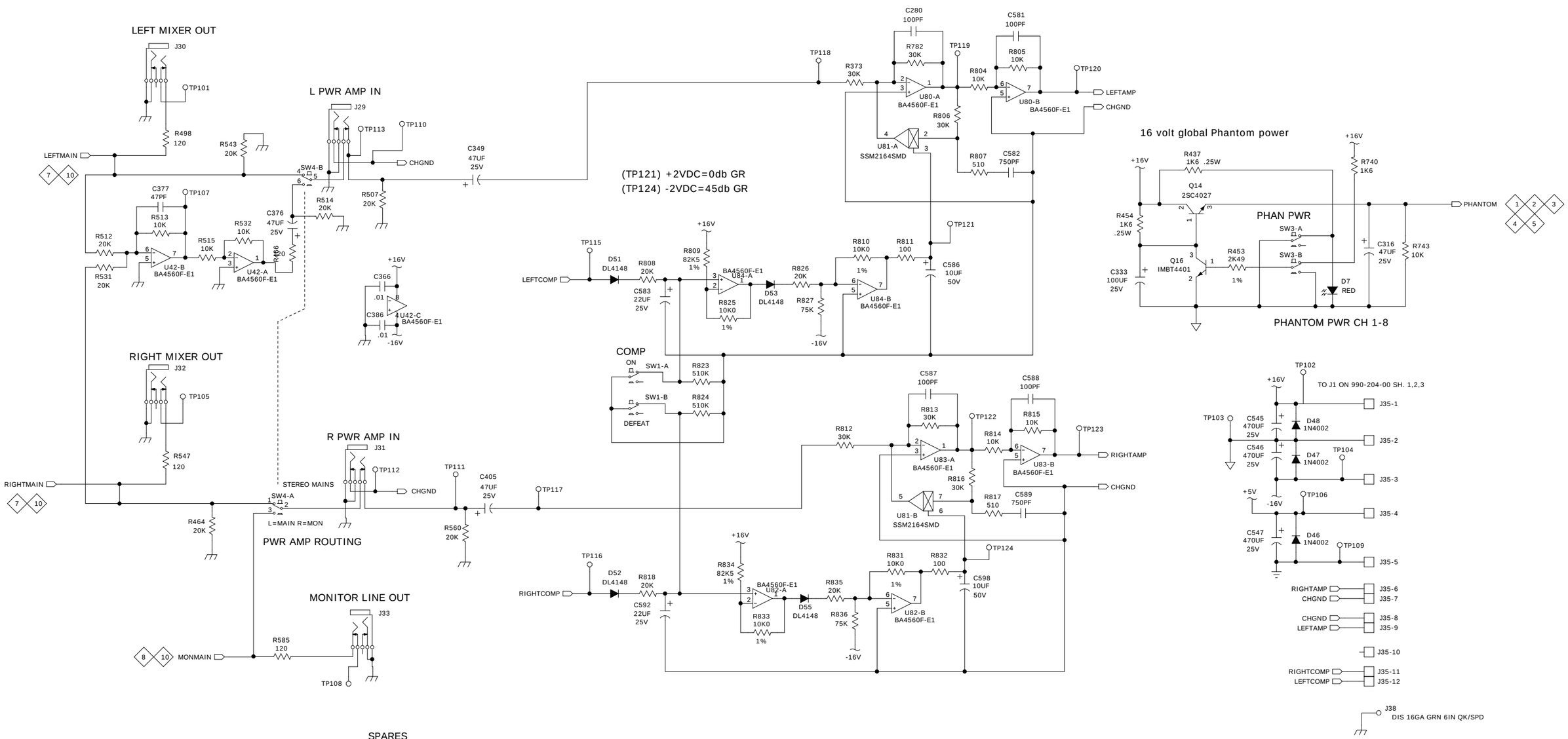

UNLESS OTHERWISE SPECIFIED DIMENSIONS ARE IN INCHES TOLERANCES ARE:
FRACTIONS: ± NA DECIMALS: .XX ± .01 .XXX ± .005 ANGLES: ± NA

MATERIAL: SEE NOTES

FINISH: SEE NOTES

DO NOT SCALE DRAWING

APPROVALS	DATE
DRAWN:	
CHECKED:	
NP ENG:	
MATERIAL:	
MFG:	
MFG ENG:	
ISSUED:	

MACKIE.
Mackie Designs Inc. Woodinville, Wa.

SCHEMATIC, MIXER BOARD 408S/808S
OUTPUT SECTION

SIZE	SCALE:	DWG. NO.	REV.
D	NONE	SCH 055-194-00-03	E29

DWG FILE:

SHEET 11 OF 11

DWG. NO.	SHT	REV:
990-193-00	1	B

ECO#	REV:	DESCRIPTION	REV. BY:	APP. BY:	DATE
	A	RELEASE TO PRODUCTION	CDJ		12-2-98
2155 2172	B	ADD SUB-ASSY 080-131,132 TO BOM Chg product to accept 2ohm load. FIX BUZZ BY CHANGING GND	WGW		2-18-99

CHANNEL 1

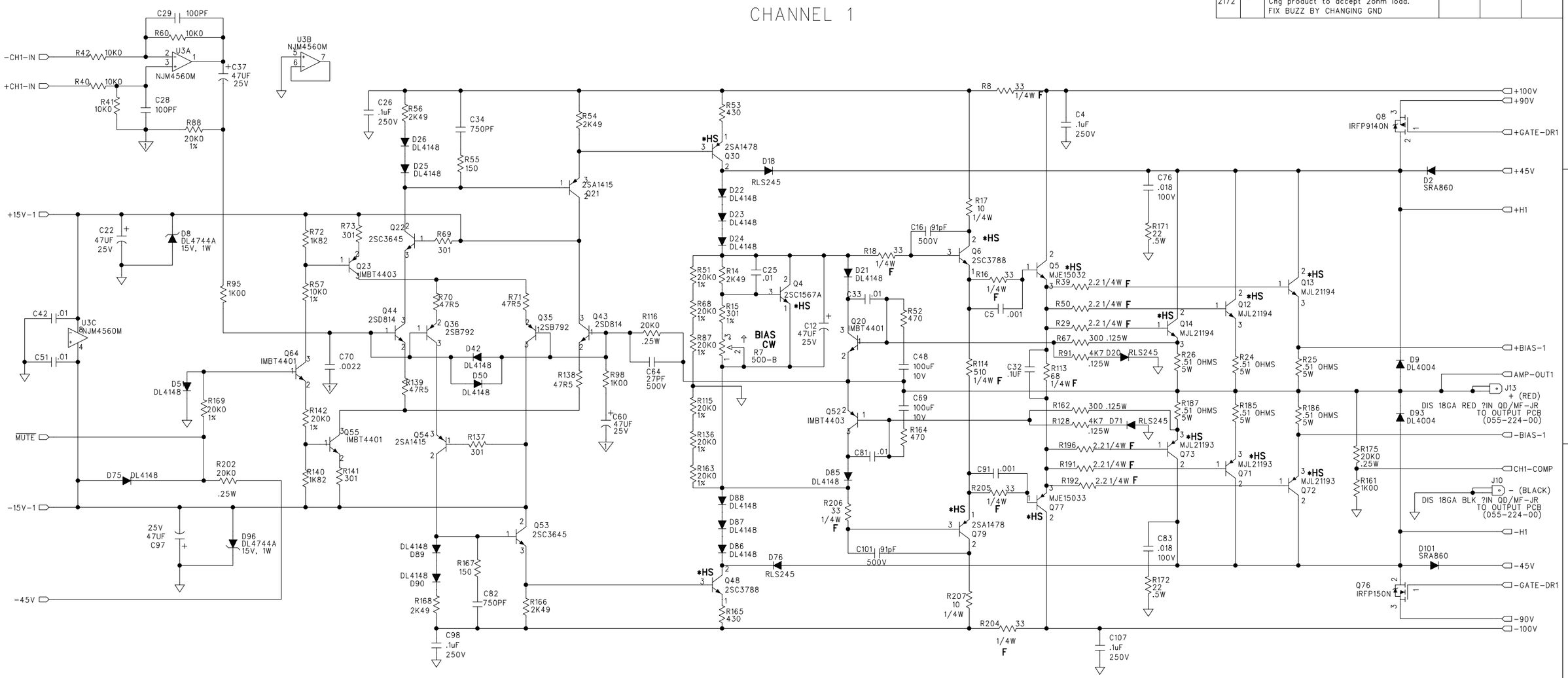

450-193-00
POWERED MIXER 800W AMP

(C) 1999 Mackie Designs Inc. All rights reserved

UNLESS OTHERWISE SPECIFIED DIMENSIONS ARE IN INCHES
TOLERANCES ARE:
FRACTIONS: ±NA DECIMALS: .XX ±.01 .XXX ±.005 ANGLES: ±NA

MATERIAL: SEE NOTES

FINISH: SEE NOTES

DO NOT SCALE DRAWING

APPROVALS		DATE
DRAWN:	wgw	7-1-98
CHECKED:	Cal P	12-18-98
NP ENG:	CJ	12-18-98
MATERIAL:		
MFG:		
MFG ENG:	Leigh	12-18-98
ISSUED:		

MACKIE.
Mackie Designs Inc. Woodinville, Wa.

SCHEMATIC, POWER MIXER
400W/400W AMP
AMPLIFIER-1

SIZE	SCALE:	DWG. NO.	REV.
D	NONE	990-193-00	B

DWG FILE: SHEET 1 OF 4

DWG. NO.	SHT	REV:
990-193-00	2	B

ECO#	REV:	DESCRIPTION	REV. BY:	APP. BY:	DATE

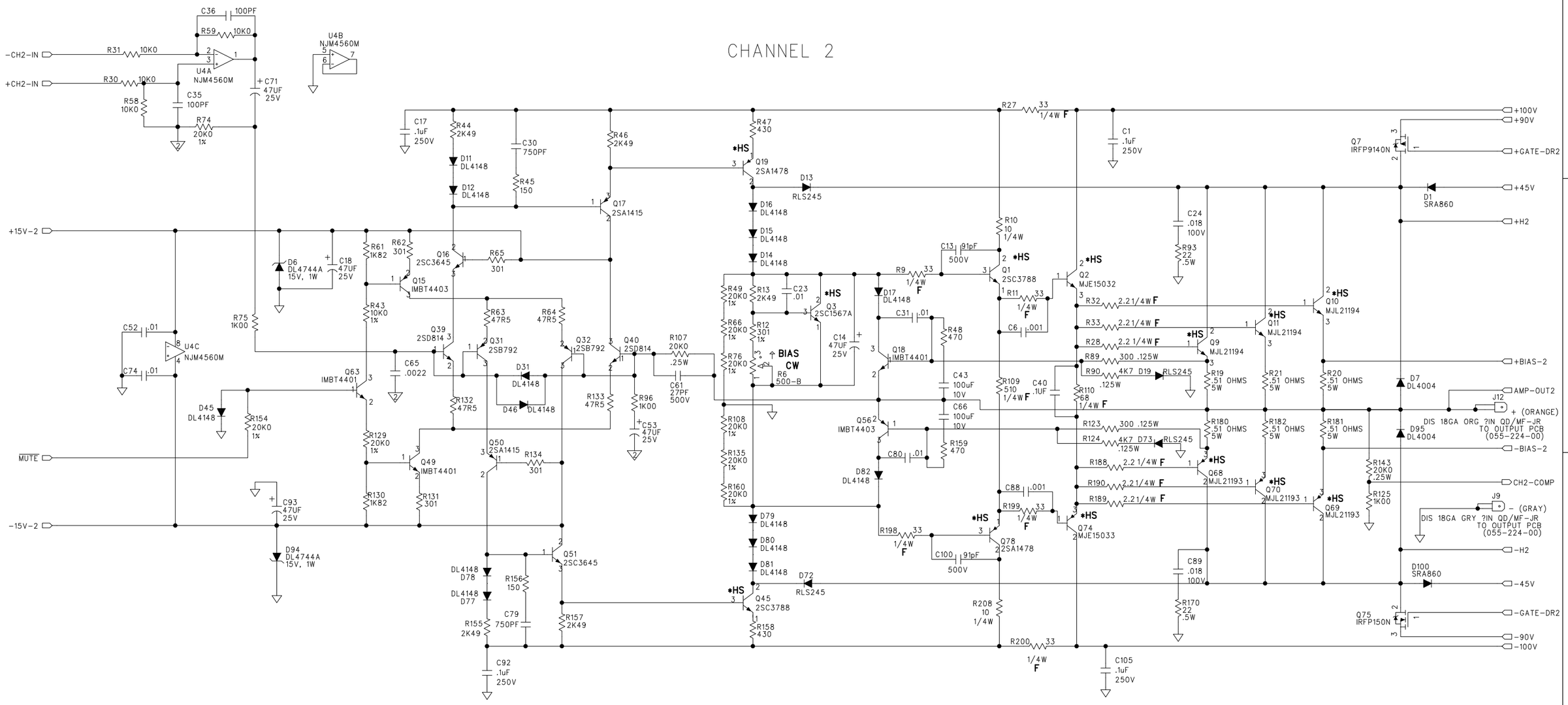

(C) 1999 Mackie Designs Inc. All rights reserved

UNLESS OTHERWISE SPECIFIED DIMENSIONS ARE IN INCHES
TOLERANCES ARE:
FRACTIONS: ±NA DECIMALS: .XX ±.01 .XXX ±.005 ANGLES: ±NA

MATERIAL: SEE NOTES

FINISH: SEE NOTES

DO NOT SCALE DRAWING

APPROVALS		DATE
DRAWN:	wgw	7-1-98
CHECKED:		
NP ENG:		
MATERIAL:		
MFG:		
MFG ENG:		
ISSUED:		

MACKIE.
Mackie Designs Inc. Woodinville, Wa.

SCHEMATIC, POWER MIXER
400W/400W AMP
AMPLIFIER-2

SIZE	SCALE:	DWG. NO.	REV.
D	NONE	990-193-00	B

DWG FILE: SHEET 2 OF 4

DWG. NO.	SHT	REV:
990-193-00	3	B

ECO#	REV:	DESCRIPTION	REV. BY:	APP. BY:	DATE

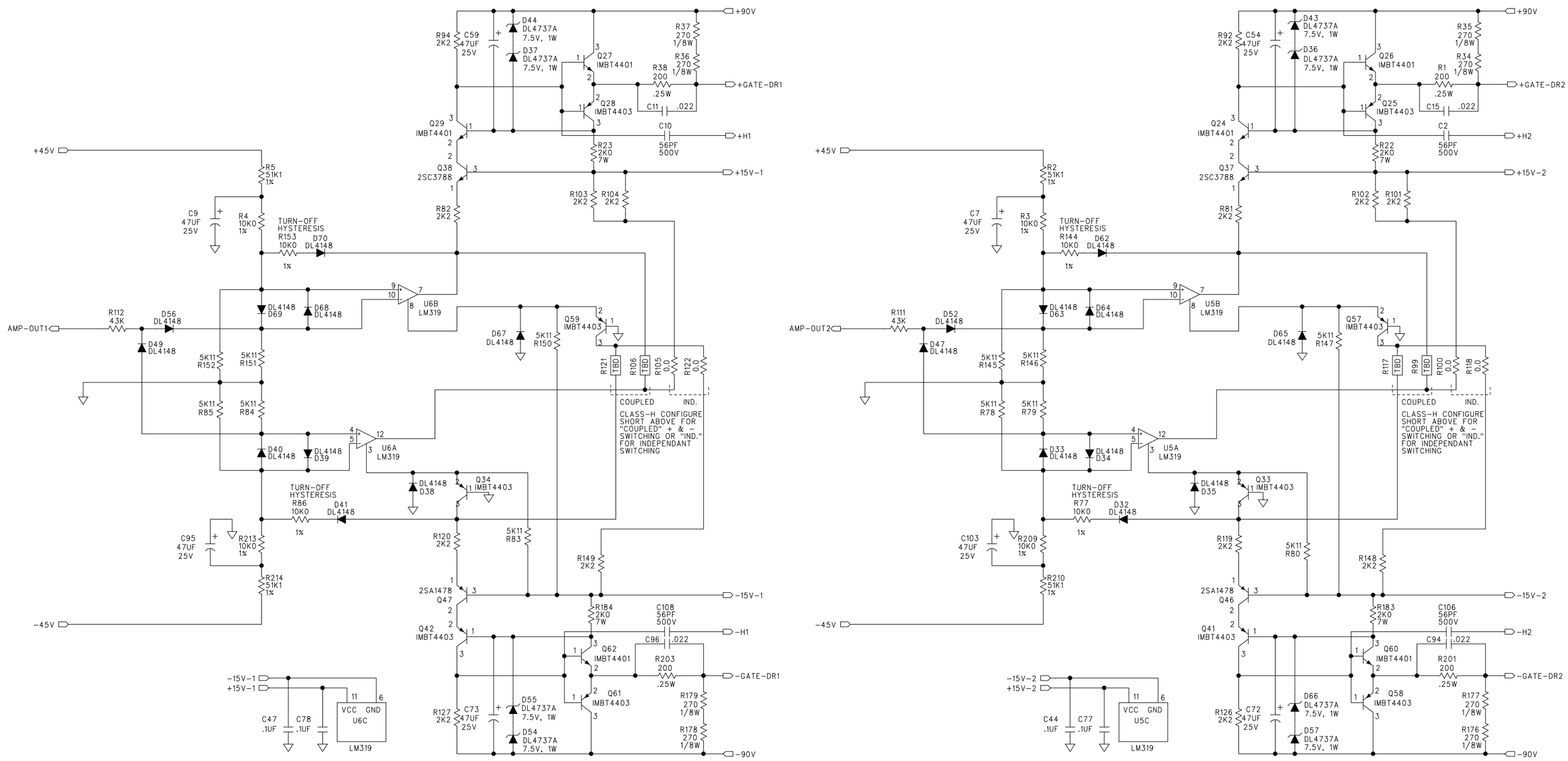

UNLESS OTHERWISE SPECIFIED DIMENSIONS ARE IN INCHES
TOLERANCES ARE:
FRACTIONS: ±NA DECIMALS: .XX ±.01 .XXX ±.005 ANGLES: ±NA

MATERIAL: SEE NOTES

FINISH: SEE NOTES

DO NOT SCALE DRAWING

APPROVALS	DATE
DRAWN: wgw	7-1-98
CHECKED:	
NP ENG:	
MATERIAL:	
MFG:	
MFG ENG:	
ISSUED:	

MACKIE.
Mackie Designs Inc. Woodinville, Wa.

SCHEMATIC, POWER MIXER
400W/400W AMP
CLASS-H SWITCHING

SIZE	SCALE:	DWG. NO.	REV.
D	NONE	900-193-00	B

DWG FILE:

SHEET 3 OF 4

(C) 1999 Mackie Designs Inc. All rights reserved

DWG. NO.	SHT	REV:
990-193-00	4	B

ECO#	REV:	DESCRIPTION	REV. BY:	APP. BY:	DATE

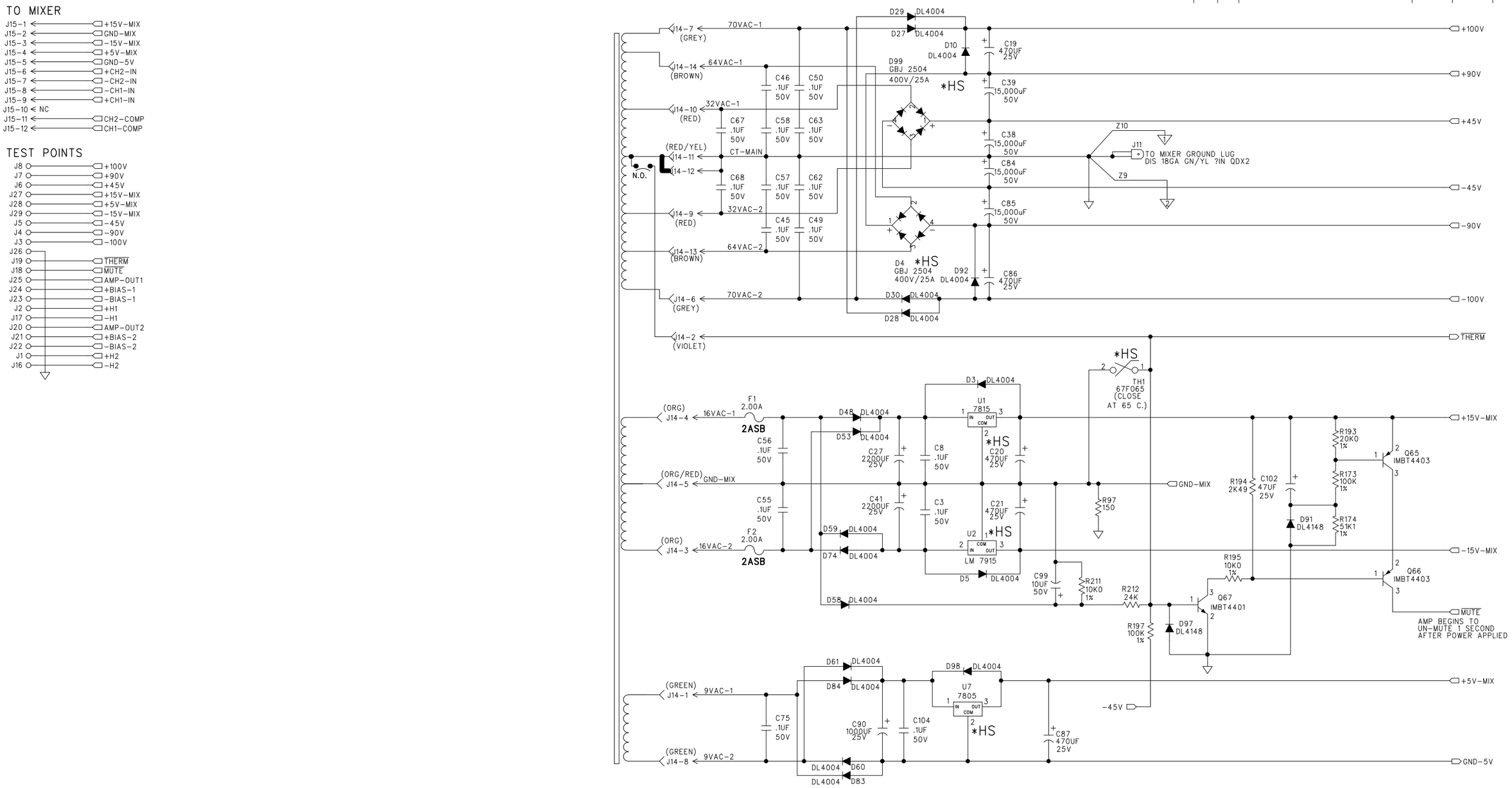

UNLESS OTHERWISE SPECIFIED DIMENSIONS ARE IN INCHES TOLERANCES ARE: FRACTIONS: ±NA DECIMALS: .XX ±.01 .XXX ±.005 ANGLES: ±NA	APPROVALS	DATE
	DRAWN: wgw	7-1-98
	CHECKED:	
	NP ENG:	
MATERIAL: SEE NOTES	MATERIAL:	
	MFG:	
FINISH: SEE NOTES	MFG ENG:	
DO NOT SCALE DRAWING	ISSUED:	

MACKIE.
Mackie Designs Inc. Woodinville, Wa.

SCHEMATIC, POWER MIXER
400W/400W AMP
POWER SUPPLY

SIZE	SCALE:	DWG. NO.	REV.
D	NONE	990-193-00	B

DWG FILE: SHEET 4 OF 4

(C) 1999 Mackie Designs Inc. All rights reserved

DWG. NO.	SHT	REV:
990-194-00	1	B

ECO#	REV:	DESCRIPTION	REV. BY:	APP. BY:	DATE
	A	RELEASE TO PRODUCTION	TH		11-11-98
2088	B	CANCELED	TH		1-6-99
2089		CHANGED BUTTONS ON SW1,SW4			
2092		BYPASSED BREAK SW OSC			
2126		ENLARGED TEST POINTS			
2133		CHANGED TO OLD POT			
2136		DEFEAT NORM ON AMP IN			
2139		REMOVED STANDOFFS, CHANGED GND WIRE			

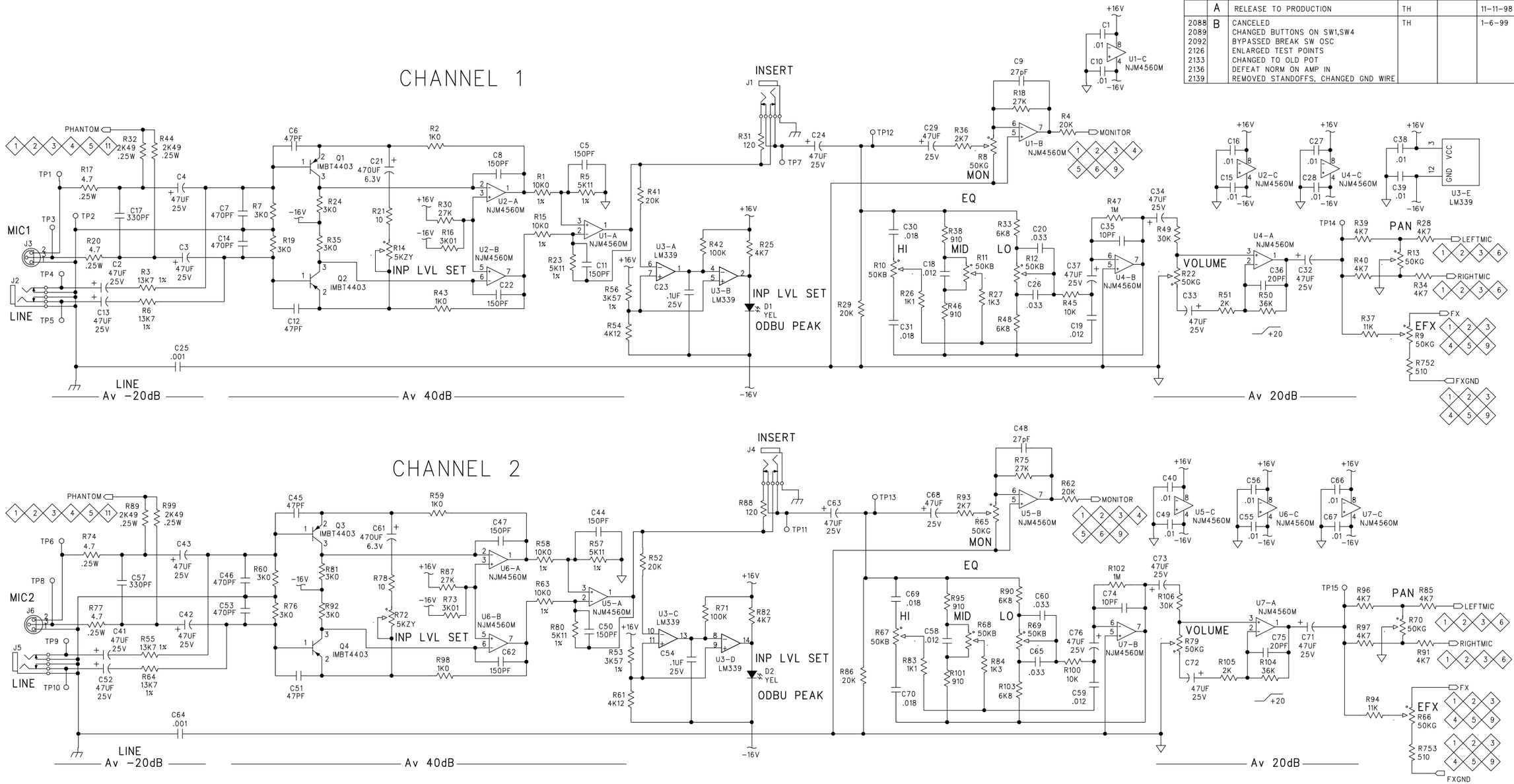

706-038-00
STDF NO.4 X .250L

706-033-10
STDF SWAGE NO.4 X .527L F

450-194-00
PCB, 410S/810S MAIN

760-109-00
BUTTON, SM RECT DUAL COLOR W/EXT

760-107-00
BUTTON, SM RECT DUAL COLOR

UNLESS OTHERWISE SPECIFIED DIMENSIONS ARE IN INCHES
TOLERANCES ARE:
FRACTIONS: ±NA DECIMALS: .XX ±.01 .XXX ±.005 ANGLES: ±NA

MATERIAL: SEE NOTES

FINISH: SEE NOTES

DO NOT SCALE DRAWING

APPROVALS		DATE
DRAWN:	trh	4-1-98
CHECKED:		
NP ENG:	CJM	11-20-98
MATERIAL:		
MFG:		
MFG ENG:	CB	11-20-98
ISSUED:	LV	11-20-98

MACKIE.
Mackie Designs Inc. Woodinville, Wa.

SCHEMATIC, MIXER BOARD 408S/808S
MIC CHANNELS 1&2

SIZE	SCALE:	DWG. NO.	REV.
D	NONE	990-194-00	B

DWG FILE:

SHEET 1 OF 11

DWG. NO.	SHT	REV:
990-194-00	5	B

ECO#	REV:	DESCRIPTION	REV. BY:	APP. BY:	DATE

CHANNEL 8

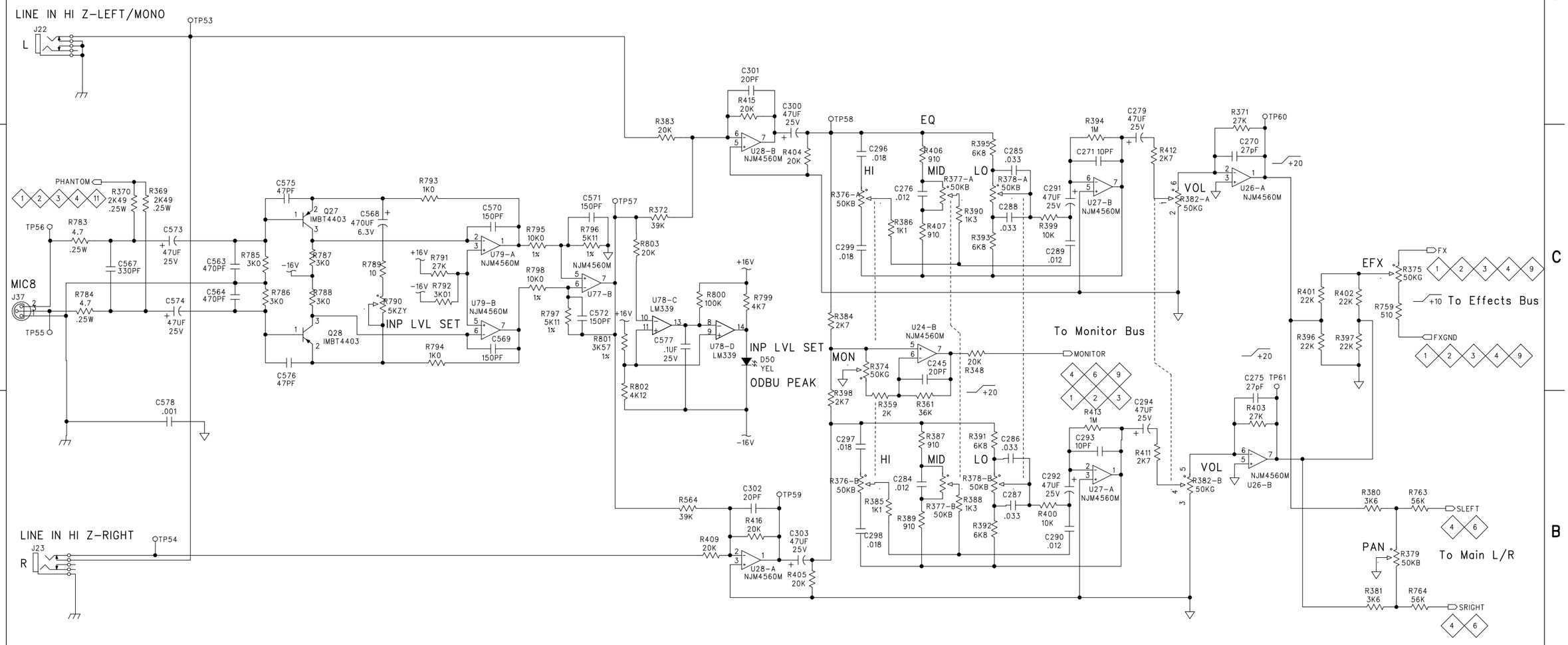

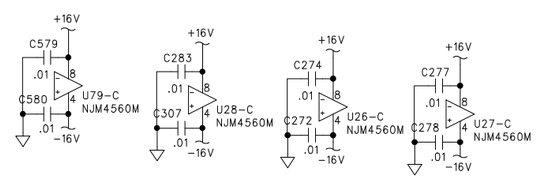

UNLESS OTHERWISE SPECIFIED DIMENSIONS ARE IN INCHES TOLERANCES ARE: FRACTIONS: ±NA DECIMALS: .XX ±.01 .XXX ±.005 ANGLES: ±NA	APPROVALS	DATE
	DRAWN:	
	CHECKED:	
	NP ENG:	
MATERIAL: SEE NOTES	MATERIAL:	
FINISH: SEE NOTES	MFG:	
	MFG ENG:	
DO NOT SCALE DRAWING	ISSUED:	

MACKIE.
Mackie Designs Inc. Woodinville, Wa.

SCHEMATIC, MIXER BOARD 408S/808S
STEREO/MIC CHANNEL 8

SIZE	SCALE:	DWG. NO.	REV.
D	NONE	990-194-00	B

DWG FILE: SHEET 5 OF 11

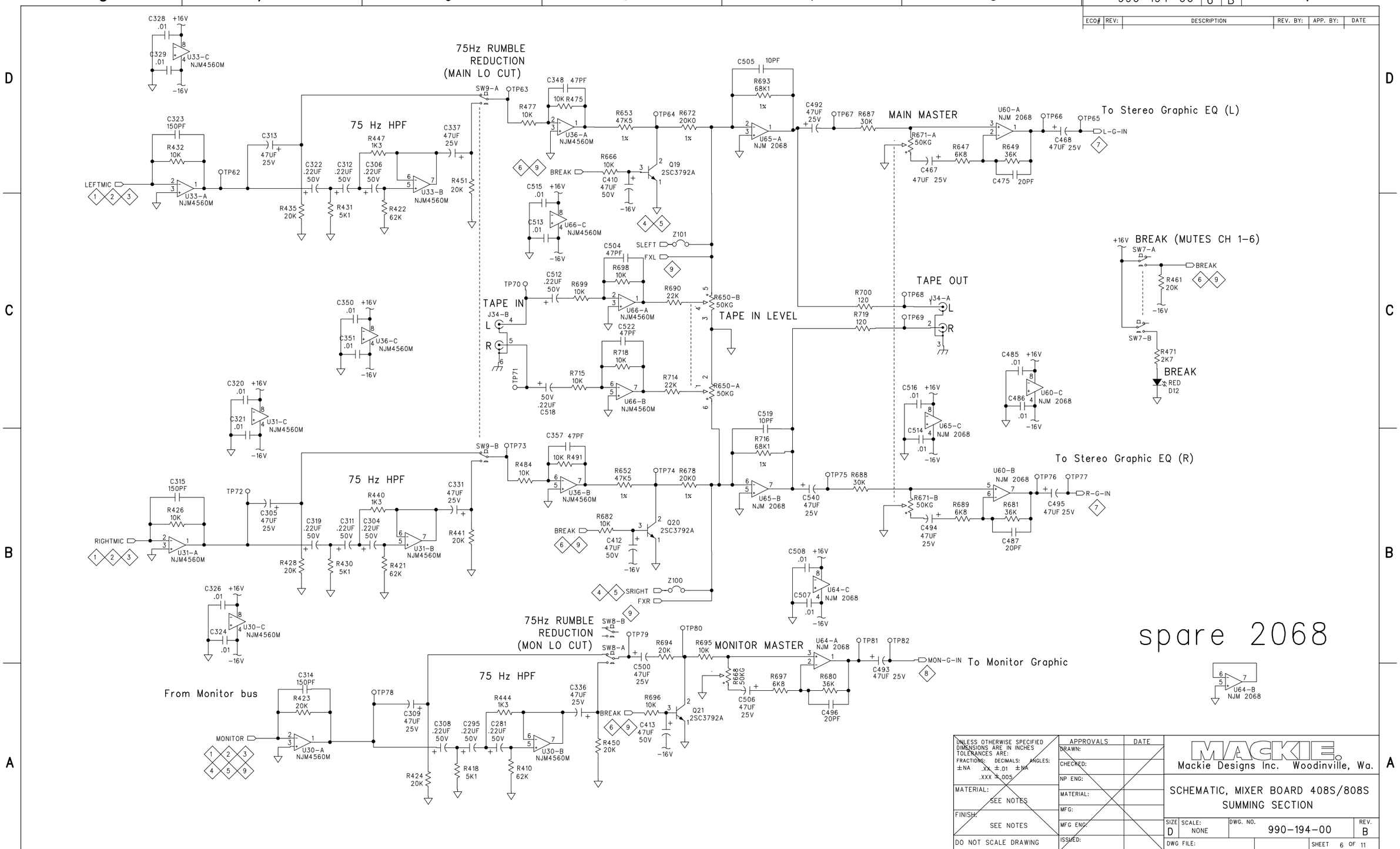
75Hz RUMBLE REDUCTION (MAIN LO CUT)
75 Hz HPF
MAIN MASTER
To Stereo Graphic EQ (L)
LEFTMIC
RIGHTMIC
TAPE IN
TAPE IN LEVEL
TAPE OUT
BREAK (MUTES CH 1-6)
BREAK
To Stereo Graphic EQ (R)
75Hz RUMBLE REDUCTION (MON LO CUT)
MONITOR MASTER
To Monitor Graphic
From Monitor bus
MONITOR
spare 2068
DWG. NO. 990-194-00 SHT 6 REV: B
ECO# REV: DESCRIPTION REV. BY: APP. BY: DATE
UNLESS OTHERWISE SPECIFIED DIMENSIONS ARE IN INCHES TOLERANCES ARE:
FRACTIONS: ±NA DECIMALS: .XX ±.01 .XXX ±.005 ANGLES: ±NA
MATERIAL: SEE NOTES
FINISH: SEE NOTES
DO NOT SCALE DRAWING
APPROVALS DATE
DRAWN:
CHECKED:
NP ENG:
MATERIAL:
MFG:
MFG ENG:
ISSUED:
MACKIE
Mackie Designs Inc. Woodinville, Wa.
SCHEMATIC, MIXER BOARD 408S/808S
SUMMING SECTION
SIZE D SCALE: NONE DWG. NO. 990-194-00 REV. B
DWG FILE:
SHEET 6 OF 11

DWG. NO.	SHT	REV:
990-194-00	7	B

ECO#	REV:	DESCRIPTION	REV. BY:	APP. BY:	DATE

MAIN-STEREO/MONO EQUALIZER

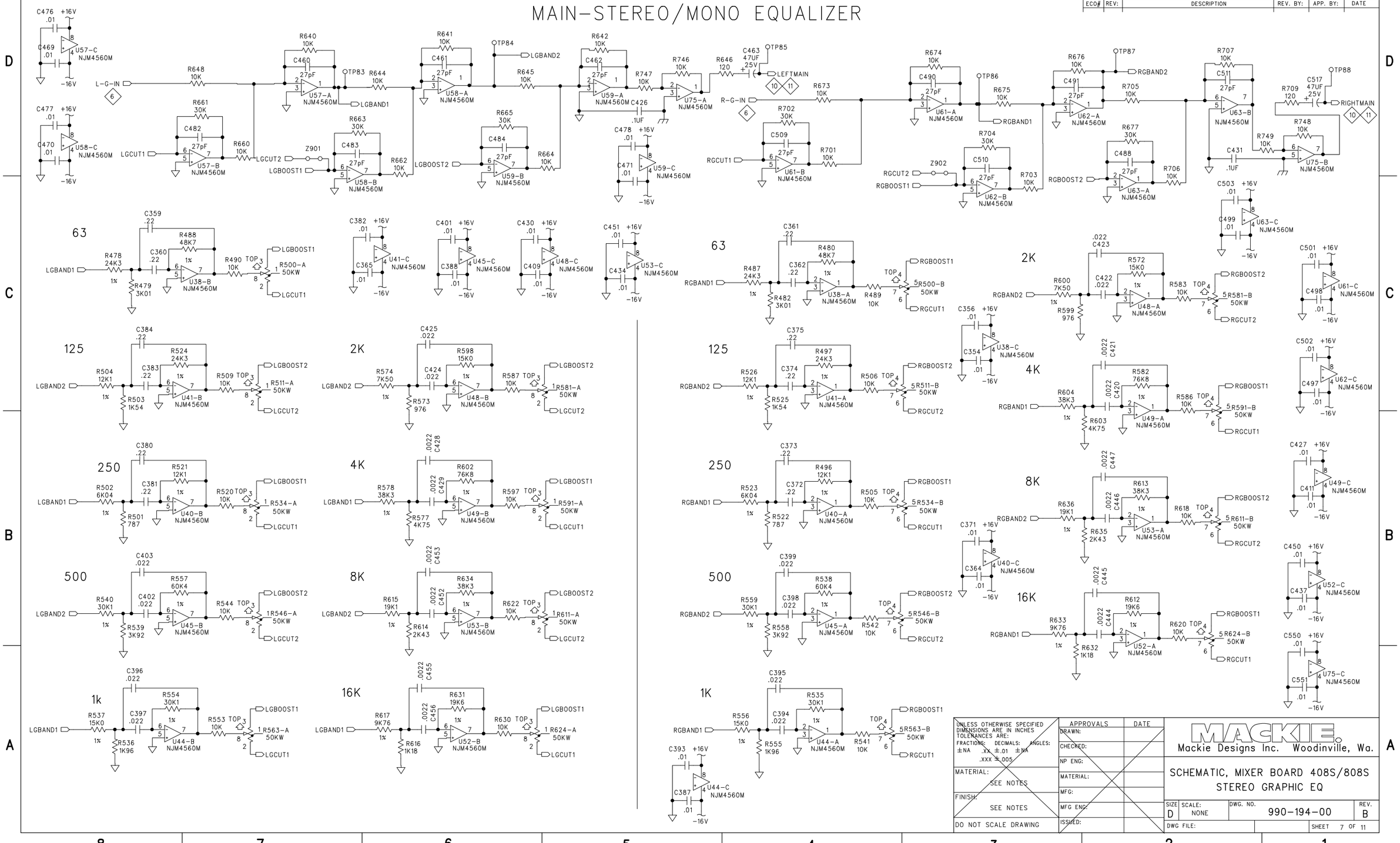

UNLESS OTHERWISE SPECIFIED DIMENSIONS ARE IN INCHES
TOLERANCES ARE:
FRACTIONS: ±NA DECIMALS: .XX ±.01 .XXX ±.005 ANGLES: ±NA

MATERIAL: SEE NOTES

FINISH: SEE NOTES

DO NOT SCALE DRAWING

APPROVALS	DATE
DRAWN:	
CHECKED:	
NP ENG:	
MATERIAL:	
MFG:	
MFG ENG:	
ISSUED:	

MACKIE
Mackie Designs Inc. Woodinville, Wa.

SCHEMATIC, MIXER BOARD 408S/808S
STEREO GRAPHIC EQ

SIZE	SCALE:	DWG. NO.	REV.
D	NONE	990-194-00	B

DWG FILE:

SHEET 7 OF 11

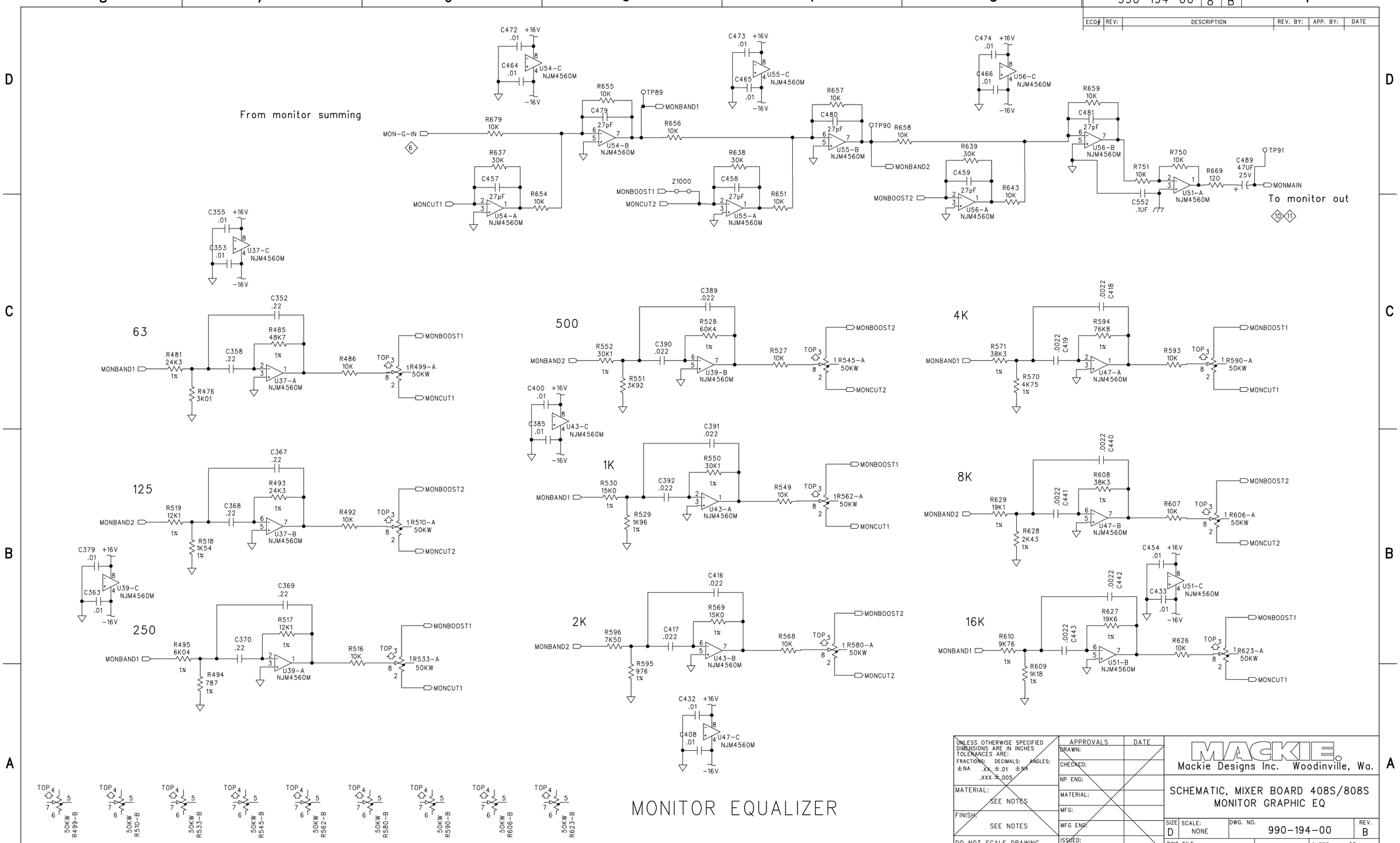

DWG. NO.	SHT	REV:
990-194-00	8	B

ECO#	REV:	DESCRIPTION	REV. BY:	APP. BY:	DATE

UNLESS OTHERWISE SPECIFIED DIMENSIONS ARE IN INCHES
TOLERANCES ARE:
FRACTIONS: ±NA DECIMALS: .XX ±.01 .XXX ±.005 ANGLES: ±NA

MATERIAL: SEE NOTES

FINISH: SEE NOTES

DO NOT SCALE DRAWING

APPROVALS	DATE
DRAWN:	
CHECKED:	
NP ENG:	
MATERIAL:	
MFG:	
MFG ENG:	
ISSUED:	

MACKIE.
Mackie Designs Inc. Woodinville, Wa.

SCHEMATIC, MIXER BOARD 408S/808S
MONITOR GRAPHIC EQ

SIZE	SCALE:	DWG. NO.	REV.
D	NONE	990-194-00	B

DWG FILE:

SHEET 8 OF 11

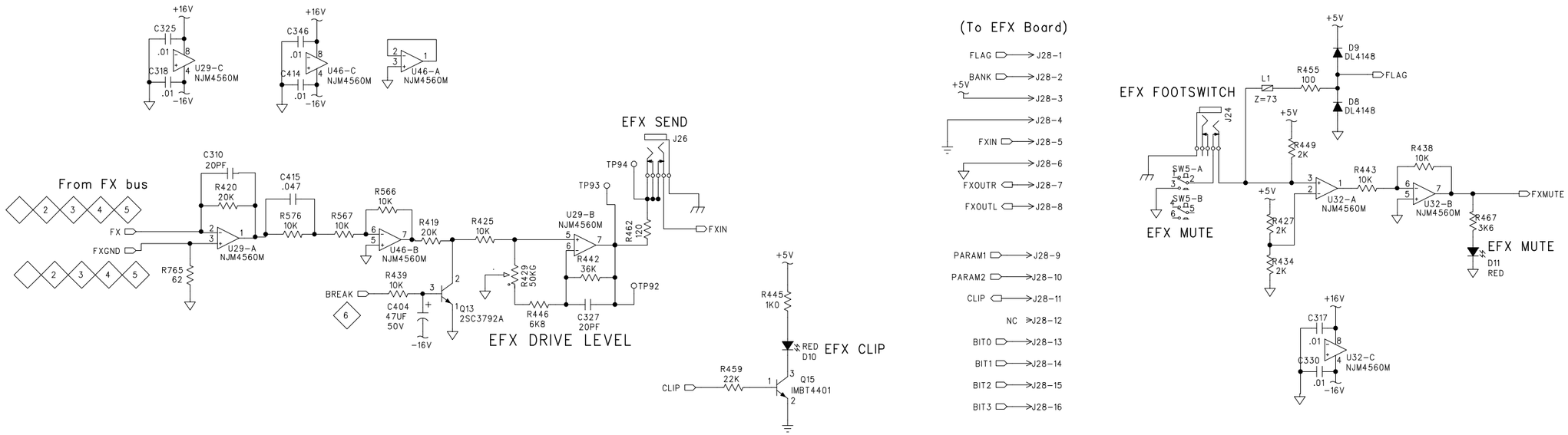

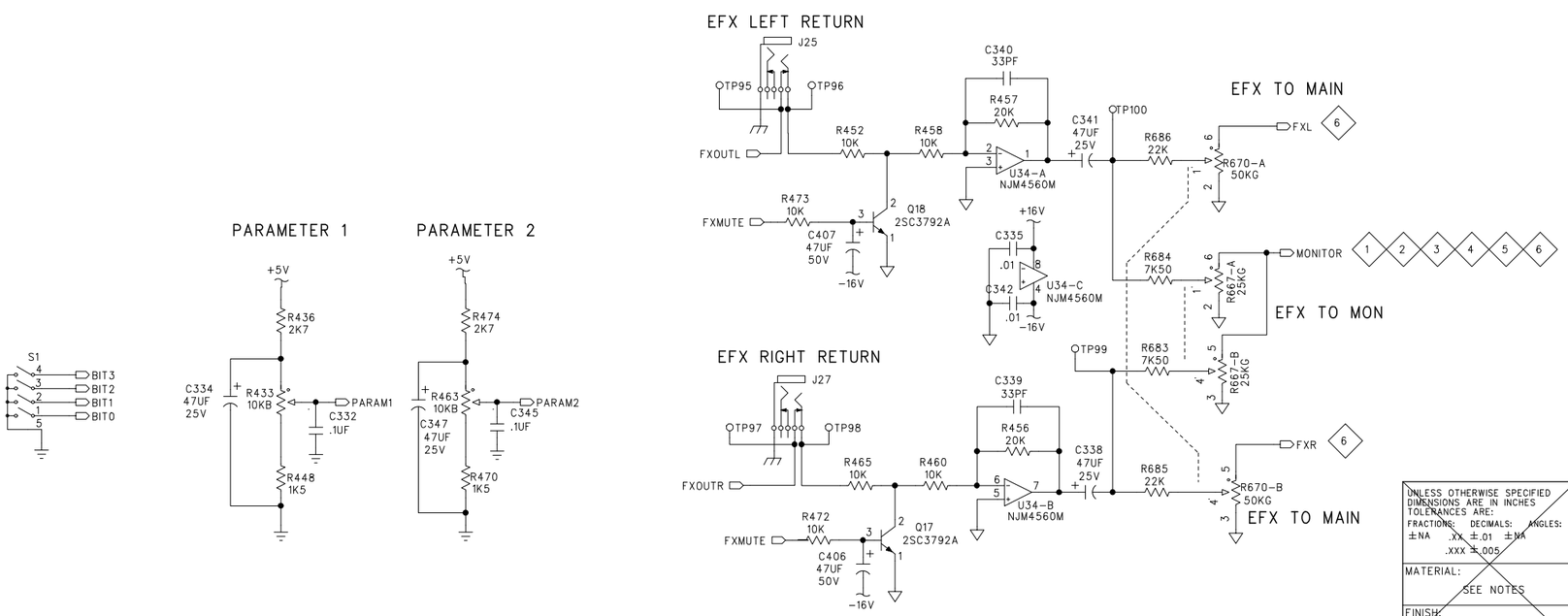

DWG. NO.	SHT	REV:
990-194-00	9	B

ECO#	REV:	DESCRIPTION	REV. BY:	APP. BY:	DATE

UNLESS OTHERWISE SPECIFIED DIMENSIONS ARE IN INCHES
TOLERANCES ARE:
FRACTIONS: ±NA DECIMALS: .XX ±.01 .XXX ±.005 ANGLES: ±NA

MATERIAL: SEE NOTES

FINISH: SEE NOTES

DO NOT SCALE DRAWING

APPROVALS	DATE
DRAWN:	
CHECKED:	
NP ENG:	
MATERIAL:	
MFG:	
MFG ENG:	
ISSUED:	

MACKIE
Mackie Designs Inc. Woodinville, Wa.

SCHEMATIC, MIXER BOARD 408S/808S
EFFECTS SECTION

SIZE	SCALE:	DWG. NO.	REV.
D	NONE	990-194-00	B

DWG FILE:

SHEET 9 OF 11

DWG. NO.	SHT	REV:
990-194-00	10	B

ECO#	REV:	DESCRIPTION	REV. BY:	APP. BY:	DATE

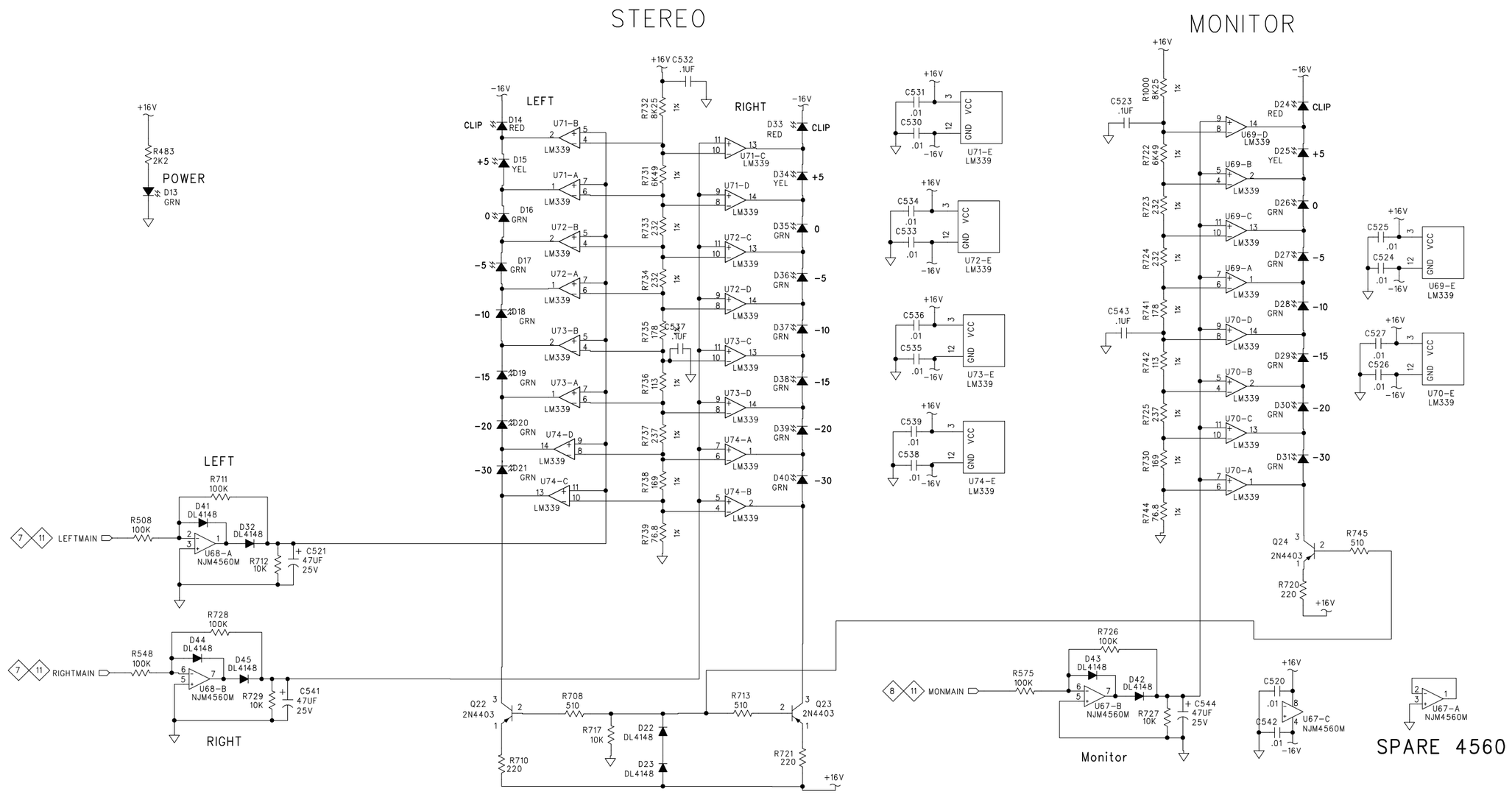

UNLESS OTHERWISE SPECIFIED DIMENSIONS ARE IN INCHES TOLERANCES ARE: FRACTIONS: ±NA DECIMALS: .XX ±.01 .XXX ±.005 ANGLES: ±NA	APPROVALS	DATE
MATERIAL: SEE NOTES	DRAWN:	
FINISH: SEE NOTES	CHECKED:	
DO NOT SCALE DRAWING	NP ENG:	
	MATERIAL:	
	MFG:	
	MFG ENG:	
	ISSUED:	

MACKIE.
Mackie Designs Inc. Woodinville, Wa.

SCHEMATIC, MIXER BOARD 408S/808S
METER SECTION

SIZE	SCALE:	DWG. NO.	REV.
D	NONE	990-194-00	B

DWG FILE: SHEET 10 OF 11

DWG. NO.	SHT	REV:
990-194-00	11	B

ECO#	REV:	DESCRIPTION	REV. BY:	APP. BY:	DATE

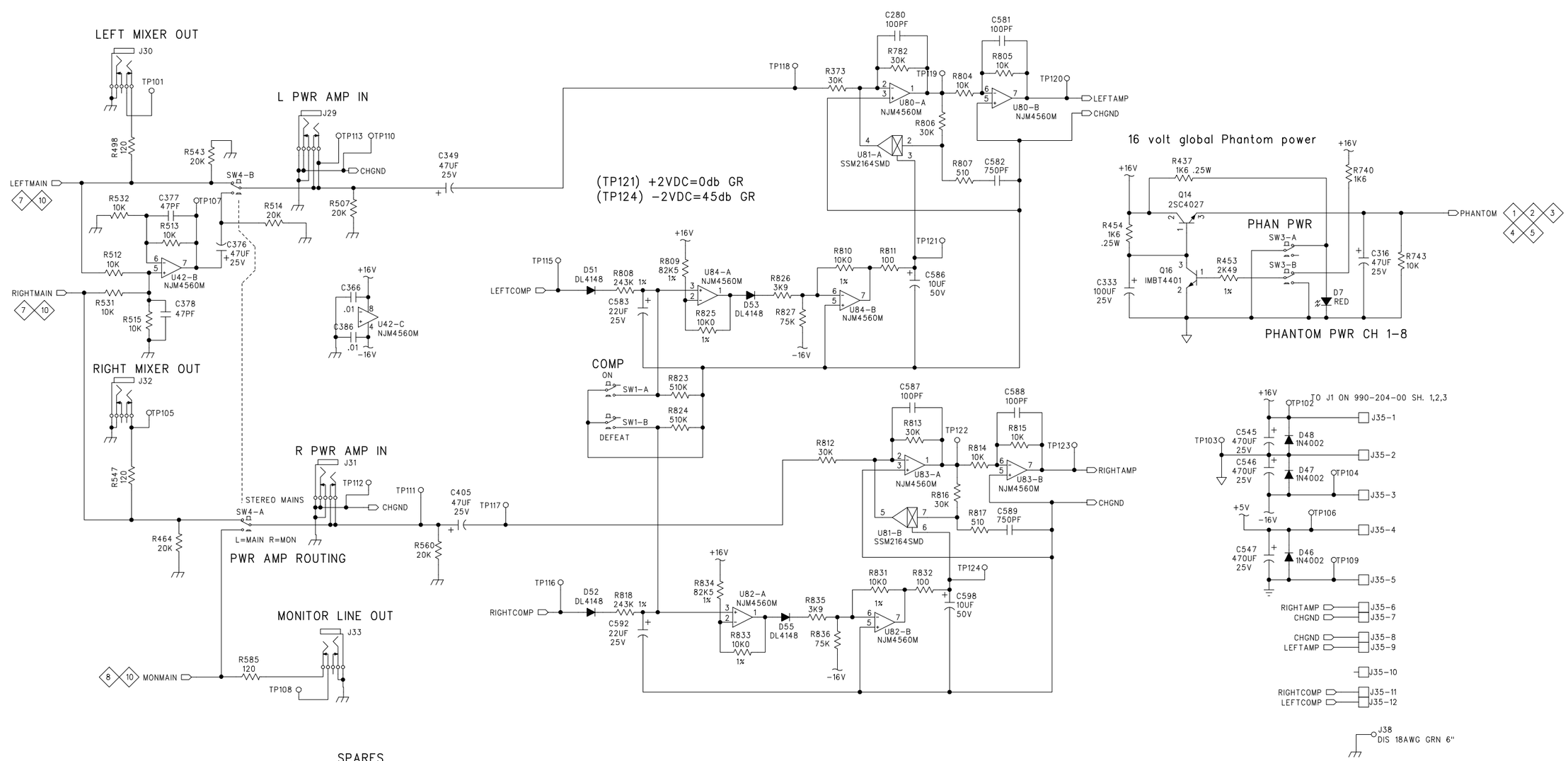

UNLESS OTHERWISE SPECIFIED DIMENSIONS ARE IN INCHES TOLERANCES ARE:
FRACTIONS: ±NA DECIMALS: .XX ±.01 .XXX ±.005 ANGLES: ±NA

MATERIAL: SEE NOTES

FINISH: SEE NOTES

DO NOT SCALE DRAWING

APPROVALS	DATE
DRAWN:	
CHECKED:	
NP ENG:	
MATERIAL:	
MFG:	
MFG ENG:	
ISSUED:	

MACKIE
Mackie Designs Inc. Woodinville, Wa.

SCHEMATIC, MIXER BOARD 408S/808S
OUTPUT SECTION

SIZE	SCALE:	DWG. NO.	REV.
D	NONE	990-194-00	B

DWG FILE: SHEET 11 OF 11