marantz®

Model 3800 Preamplifier

Schematic Diagram

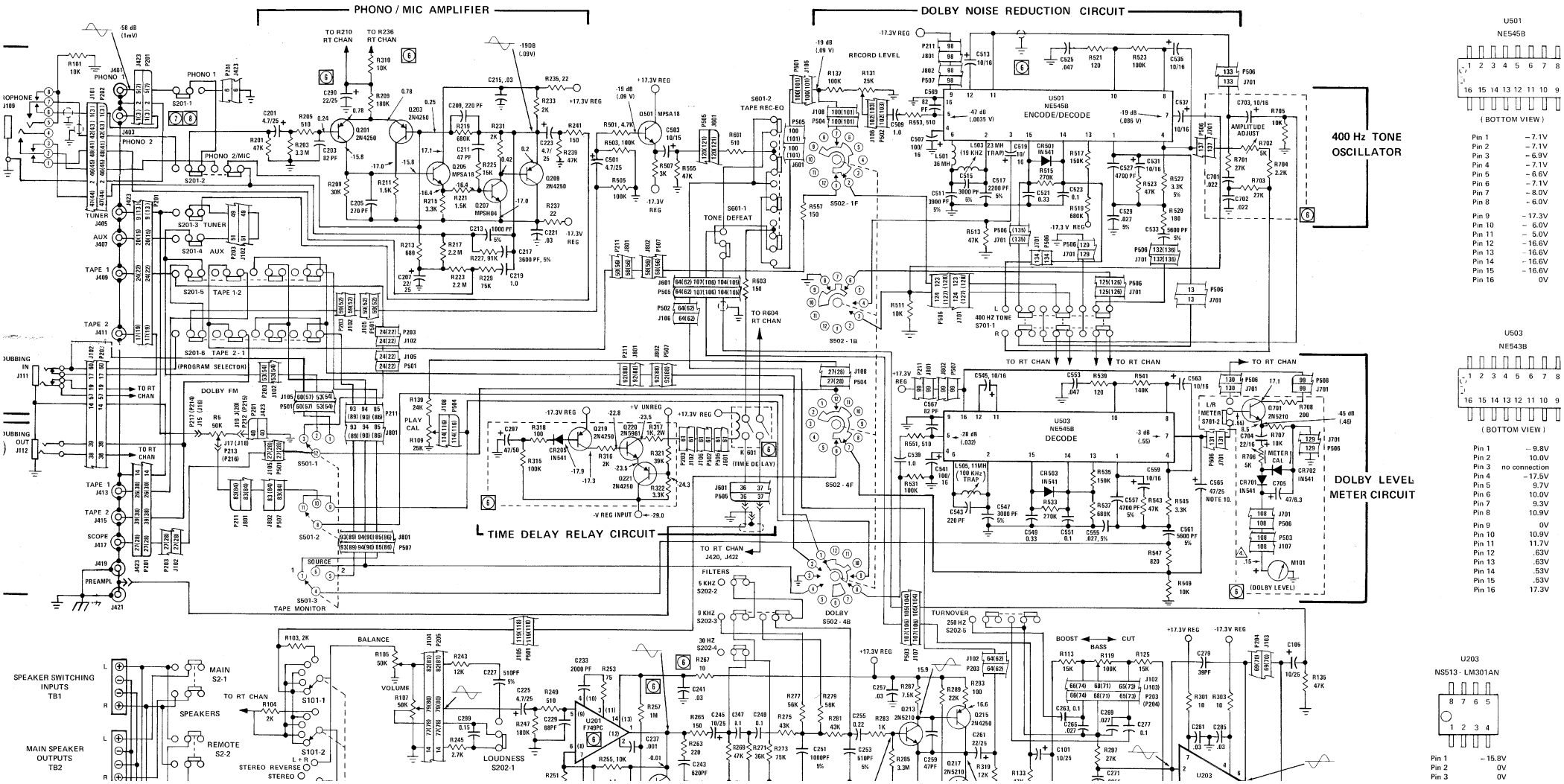

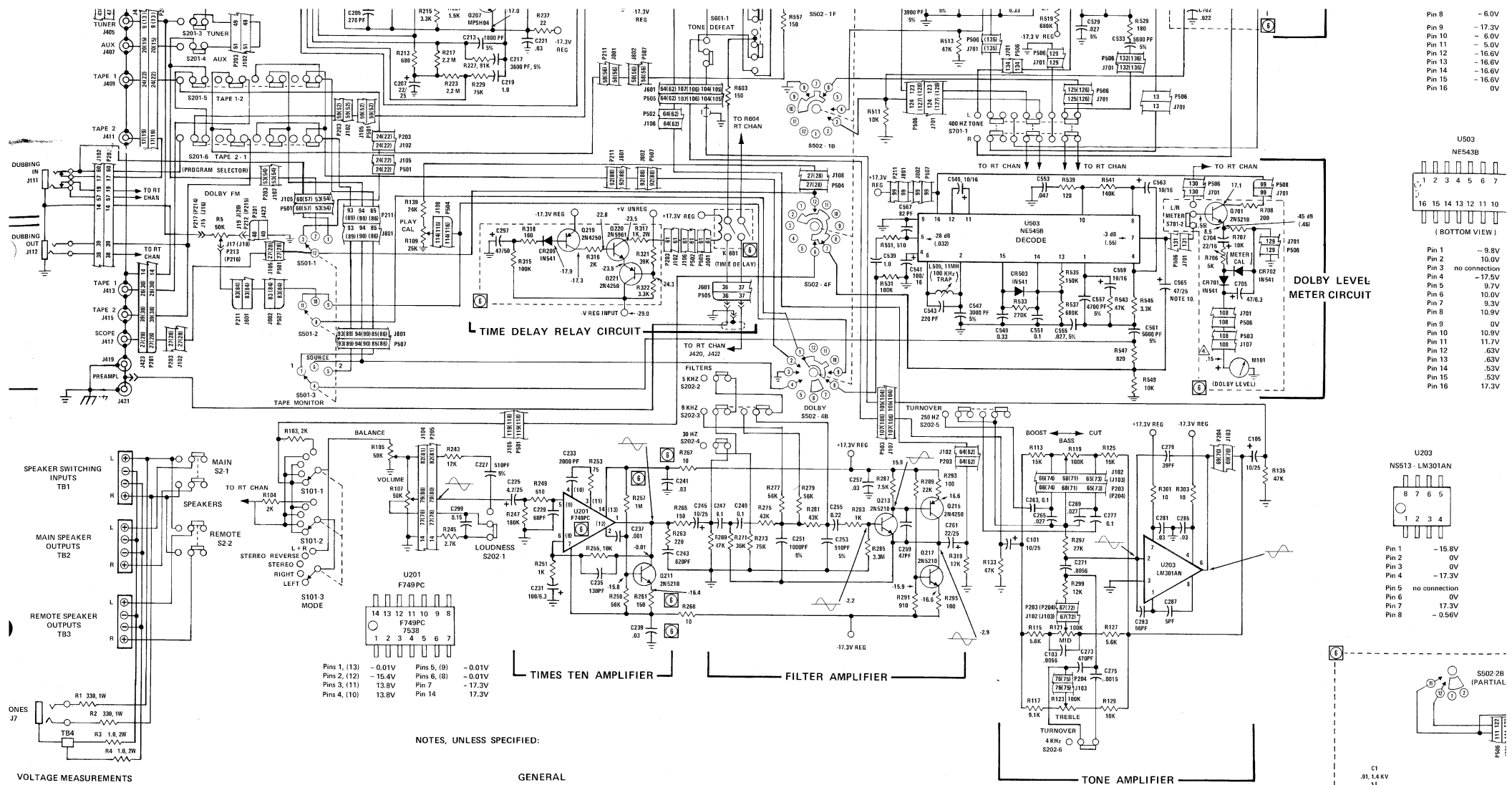

Pin 8	−6.0V
Pin 9	−17.3V
Pin 10	−6.0V
Pin 11	−5.0V
Pin 12	−16.6V
Pin 13	−16.6V
Pin 14	−16.6V
Pin 15	−16.6V
Pin 16	0V

Pin 1	−9.8V
Pin 2	10.0V
Pin 3	no connection
Pin 4	−17.5V
Pin 5	9.7V
Pin 6	10.0V
Pin 7	9.3V
Pin 8	10.9V
Pin 9	0V
Pin 10	10.9V
Pin 11	11.7V
Pin 12	.63V
Pin 13	.63V
Pin 14	.53V
Pin 15	.53V
Pin 16	17.3V

Pin 1	−15.8V
Pin 2	0V
Pin 3	0V
Pin 4	−17.3V
Pin 5	no connection
Pin 6	0V
Pin 7	17.3V
Pin 8	−0.56V

Pins 1, (13)	−0.01V	Pins 5, (9)	−0.01V
Pins 2, (12)	−15.4V	Pins 6, (8)	−0.01V
Pins 3, (11)	13.8V	Pin 7	−17.3V
Pins 4, (10)	13.8V	Pin 14	17.3V

NOTES, UNLESS SPECIFIED:

VOLTAGE MEASUREMENTS

1. All voltages are representative of those measured on a typical unit while maintaining a line input voltage of 120 VAC and are referenced to chassis ground.

2. Unless otherwise noted, all DC voltage measurements obtained under the following conditions:
   - A. No signal applied, input jack shorted.
   - B. All controls in mid-position.
   - C. MODE switch in STEREO.
   - D. TAPE MONITOR switch in SOURCE.

3. All AC voltages are expressed in RMS and obtained under the following conditions:
   - A. 1mV input signal @ 1kHz applied to PHONO 1 input.
   - B. PLAY CAL controls adjusted for "0" Dolby level on the Dolby Level Meter.
   - C. VOLUME control adjusted to obtain 1V signal output.
   - D. DOLBY switch in REC-1.
   - E. All controls in mid-position.
   - F. MODE switch in STEREO.
   - G. TAPE MONITOR switch in SOURCE.

GENERAL

1. RESISTORS IN OHMS, 1/4W, 5%.
2. CAPACITORS IN MFD, 10%. POLARIZED CAPACITORS ARE ELECTROLYTICS ⊥.
3. THIS SCHEMATIC SHOWS LEFT CHANNEL ONLY.
4. NUMBERS IN PARENTHESIS ARE FOR RIGHT CHANNEL.
5. LEFT CHANNEL REFERENCE DESIGNATIONS FOR CAPACITORS, RESISTORS AND SEMICONDUCTORS ARE ODD NUMBERS. RIGHT CHANNEL REFERENCE DESIGNATIONS FOR THESE PARTS ARE NEXT HIGHER EVEN NUMBERS.

6. COMPONENT OR CIRCUIT COMMON TO BOTH CHANNELS.
7. ALL PUSHBUTTON SWITCHES EXCEPT PHONO 1 ARE SHOWN IN NORMALLY OUT POSITION.
8. SWITCHES S201-1 THROUGH S201-4 ARE INTERLOCKING.
9. ALL ROTARY SWITCHES SHOWN IN FULL CCW POSITION (SEE DETAIL FOR DOLBY SWITCH).

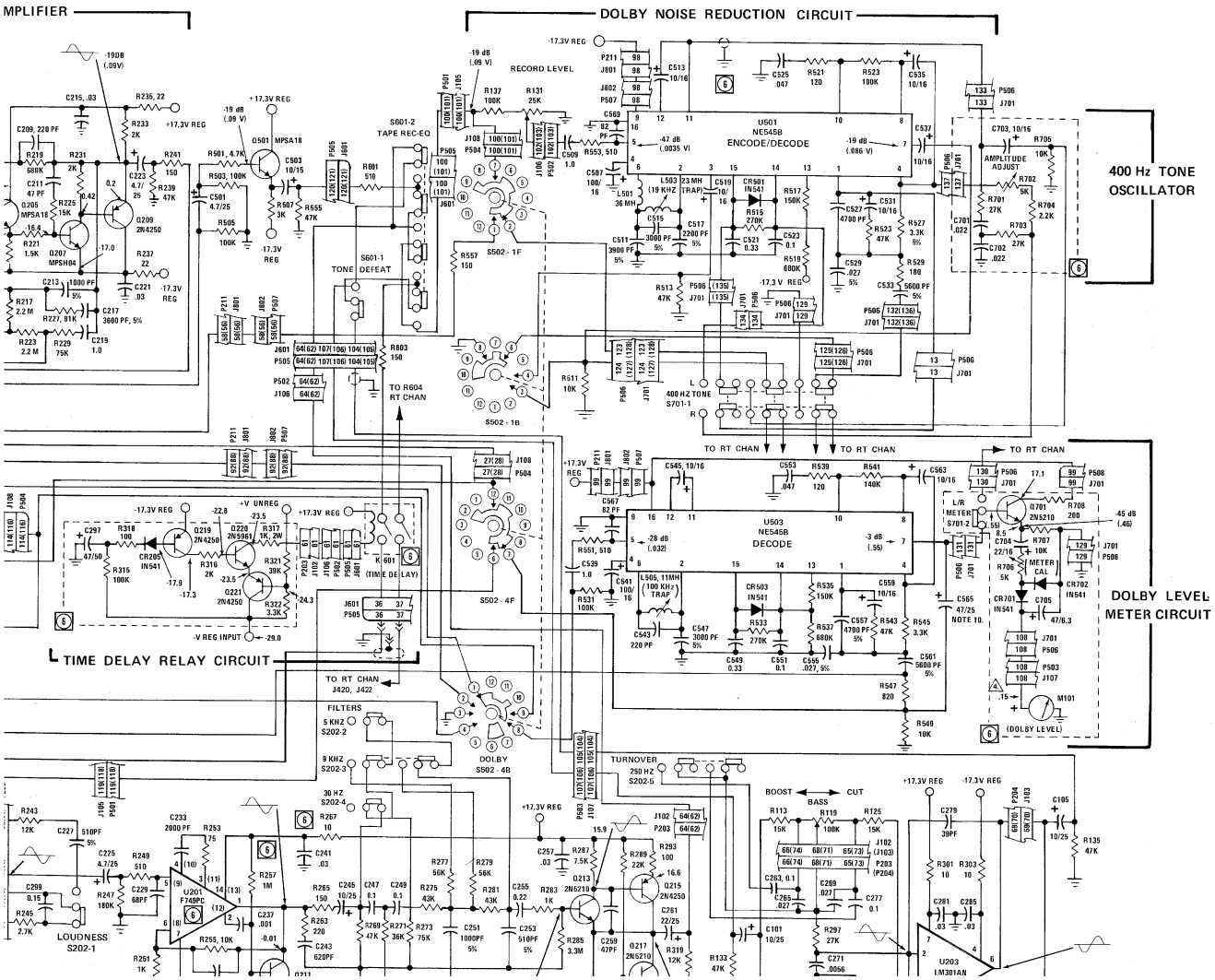

U501
NE545B

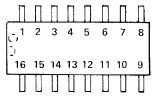

(BOTTOM VIEW)

Pin 1	−7.1V
Pin 2	−7.1V
Pin 3	−6.9V
Pin 4	−7.1V
Pin 5	−6.6V
Pin 6	−7.1V
Pin 7	−8.0V
Pin 8	−6.0V
Pin 9	−17.3V
Pin 10	−6.0V
Pin 11	−5.0V
Pin 12	−16.6V
Pin 13	−16.6V
Pin 14	−16.6V
Pin 15	−16.6V
Pin 16	0V

U503
NE543B

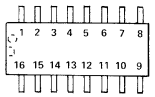

(BOTTOM VIEW)

Pin 1	−9.8V
Pin 2	10.0V
Pin 3	no connection
Pin 4	−17.5V
Pin 5	9.7V
Pin 6	10.0V
Pin 7	9.3V
Pin 8	10.9V
Pin 9	0V
Pin 10	10.9V
Pin 11	11.7V
Pin 12	.63V
Pin 13	.63V
Pin 14	.53V
Pin 15	.53V
Pin 16	17.3V

U203
NS513 - LM301AN

Pin 1	−15.8V
Pin 2	0V
Pin 3	0V
Pin 4	−17.3V

MODEL 3800 EXPORT ONLY

220V VERSION SHOWN

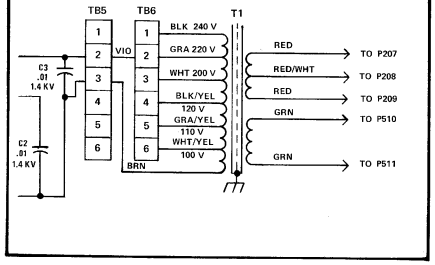

MODEL 3800 EXPORT ONLY

100V VERSION SHOWN

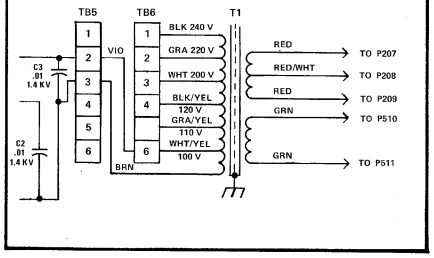

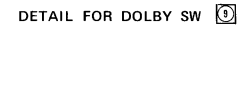

DETAIL FOR DOLBY SW

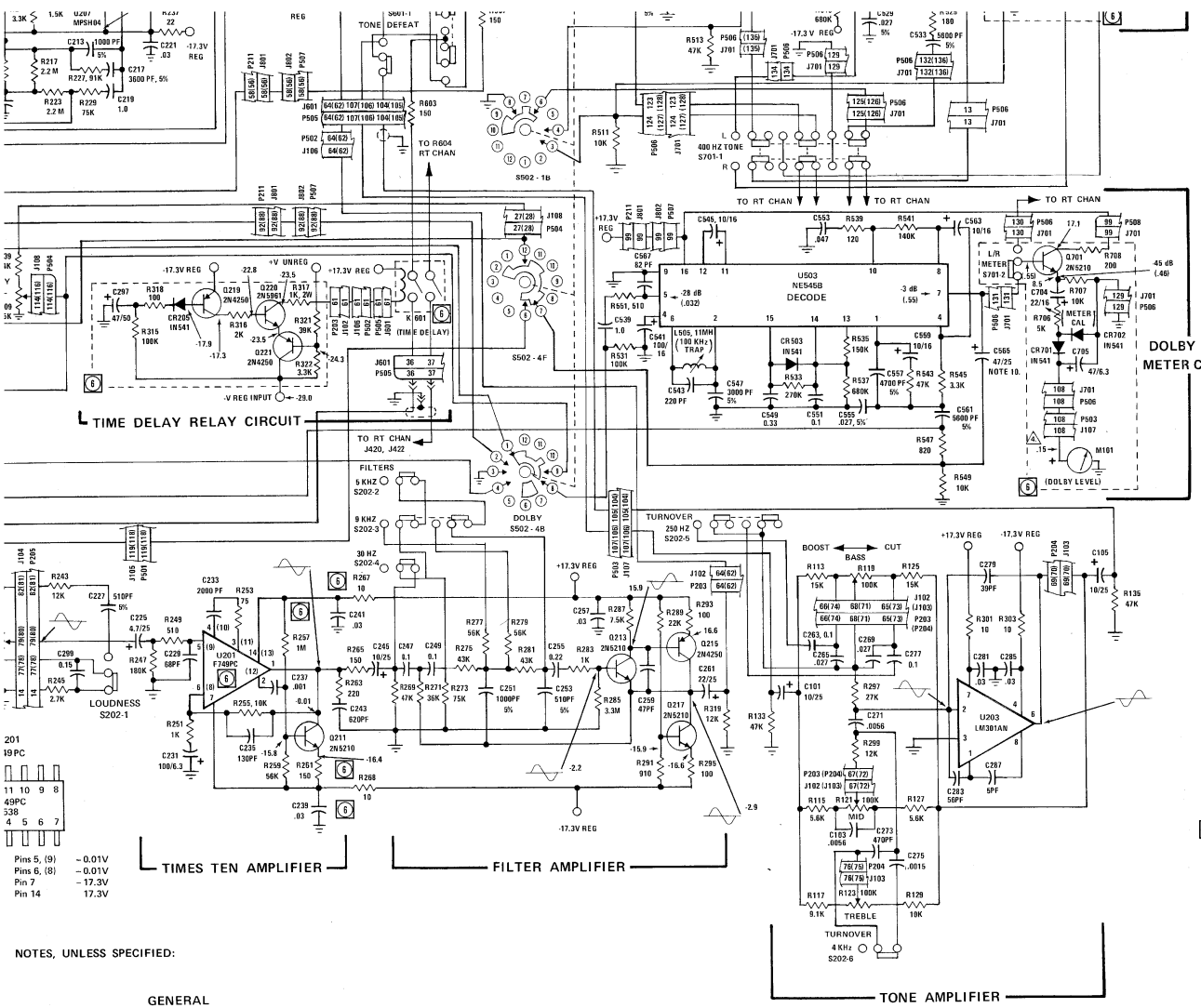

Pins 5, (9) – 0.01V
Pins 6, (8) – 0.01V
Pin 7 – 17.3V
Pin 14 17.3V

Pin 9 – 17.3V
Pin 10 – 6.0V
Pin 11 – 5.0V
Pin 12 – 16.6V
Pin 13 – 16.6V
Pin 14 – 16.6V
Pin 15 – 16.6V
Pin 16 0V

U503
NE543B

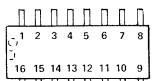

(BOTTOM VIEW)

Pin 1 – 9.8V
Pin 2 10.0V
Pin 3 no connection
Pin 4 – 17.5V
Pin 5 9.7V
Pin 6 10.0V
Pin 7 9.3V
Pin 8 10.9V

Pin 9 0V
Pin 10 10.9V
Pin 11 11.7V
Pin 12 .63V
Pin 13 .63V
Pin 14 .53V
Pin 15 .53V
Pin 16 17.3V

MODEL 3800 EXPORT ONLY
100V VERSION SHOWN

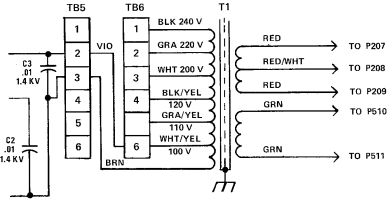

U203
NS513 - LM301AN

Pin 1 – 15.8V
Pin 2 0V
Pin 3 0V
Pin 4 – 17.3V

Pin 5 no connection
Pin 6 0V
Pin 7 17.3V
Pin 8 – 0.56V

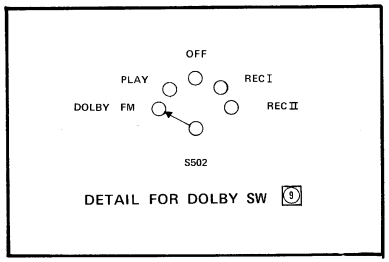

DETAIL FOR DOLBY SW 9

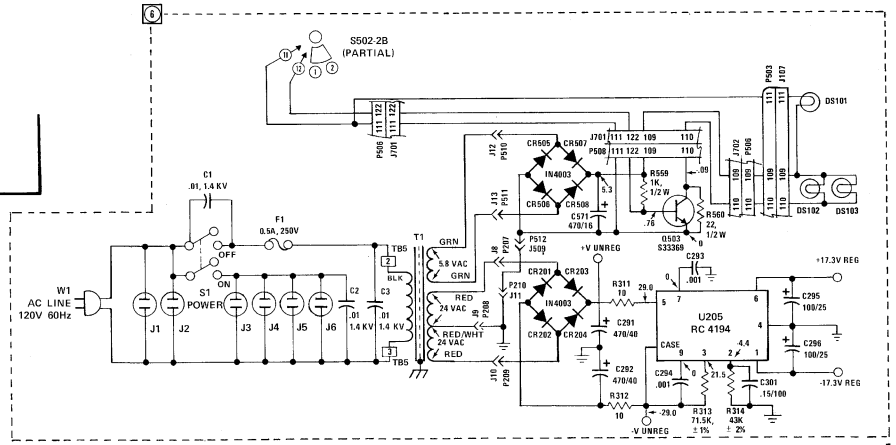

NOTES, UNLESS SPECIFIED:

age of 120 VAC

GENERAL

1. RESISTORS IN OHMS, 1/4W, 5%.
2. CAPACITORS IN MFD, 10%. POLARIZED CAPACITORS ARE ELECTROLYTICS +|−.
3. THIS SCHEMATIC SHOWS LEFT CHANNEL ONLY.
4. NUMBERS IN PARENTHESIS ARE FOR RIGHT CHANNEL.
5. LEFT CHANNEL REFERENCE DESIGNATIONS FOR CAPACITORS, RESISTORS AND SEMICONDUCTORS ARE ODD NUMBERS. RIGHT CHANNEL REFERENCE DESIGNATIONS FOR THESE PARTS ARE NEXT HIGHER EVEN NUMBERS.

6 COMPONENT OR CIRCUIT COMMON TO BOTH CHANNELS.

7 ALL PUSHBUTTON SWITCHES EXCEPT PHONO 1 ARE SHOWN IN NORMALLY OUT POSITION.

8 SWITCHES S201-1 THROUGH S201-4 ARE INTERLOCKING.

9 ALL ROTARY SWITCHES SHOWN IN FULL CCW POSITION (SEE DETAIL FOR DOLBY SWITCH).