Service Manual

CC4003 /FB/N1B/U1B

5 Disc CD Changer

CC4003

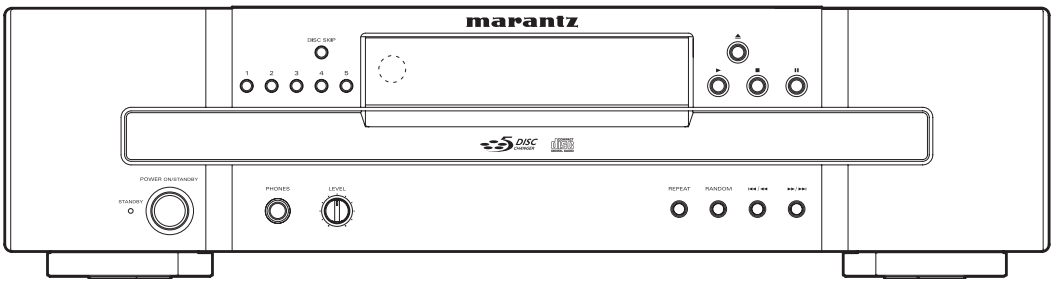

COMPACT disc DIGITAL AUDIO

TABLE OF CONTENTS

SECTION	PAGE
1. TECHNICAL SPECIFICATIONS	1
2. SERVICE HINTS AND TOOLS	2
3. WARNING AND LASER SAFETY INSTRUCTIONS	3
4. CAUTION	4
5. TAKING THE DISC OUT OF EMERGENCY	6
6. SERVICE MODE	7
7. UPDATE DSP FIRMWARE PROCEDURE	8
8. WIRING DIAGRAM	9
9. BLOCK DIAGRAM	11
10. SCHEMATIC DIAGRAM	13
11. PARTS LOCATION	17
12. EXPLODED VIEW AND PARTS LIST	27
13. MICROPROCESSOR AND IC DATA	31
14. ELECTRICAL PARTS LIST	41
15. ABOUT REPLACE THE MICROPROCESSOR WITH A NEW ONE	52

Please use this service manual with referring to the user guide (D.F.U.) without fail.
修理の際は、必ず取扱説明書を準備し操作方法を確認の上作業を行ってください。

marantz®

CC4003

Ver. 2

Please refer to the MODIFICATION NOTICE.

X0412V01DM/DG0910

Copyright 2009 D&M Holdings Inc. All rights reserved.
WARNING: Violators will be prosecuted to the maximum extent possible.

Part no. 90M21DW855020
First Issue 2009.10

MARANTZ DESIGN AND SERVICE

Using superior design and selected high grade components, **MARANTZ** company has created the ultimate in stereo sound. Only original **MARANTZ** parts can insure that your **MARANTZ** product will continue to perform to the specifications for which it is famous.
Parts for your **MARANTZ** equipment are generally available to our National Marantz Subsidiary or Agent.

ORDERING PARTS :

Parts can be ordered either by mail or by Fax.. In both cases, the correct part number has to be specified.
The following information must be supplied to eliminate delays in processing your order :

1. Complete address
2. Complete part numbers and quantities required
3. Description of parts
4. Model number for which part is required
5. Way of shipment
6. Signature : any order form or Fax. must be signed, otherwise such part order will be considered as null and void.

USA
MARANTZ AMERICA, INC
100 CORPORATE DRIVE
MAHWAH, NEW JERSEY 07430
USA

EUROPE / TRADING
D&M EUROPE B. V.
P. O. BOX 8744, BUILDING SILVERPOINT
BEEMDSTRAAT 11, 5653 MA EINDHOVEN
THE NETHERLANDS
PHONE : +31 - 40 - 2507844
FAX : +31 - 40 - 2507860

CANADA
D&M Canada Inc.
5-505 APPLE CREEK BLVD.
MARKHAM, ONTARIO L3R 5B1
CANADA
PHONE : 905 - 415 - 9292
FAX : 905 - 475 - 4159

JAPAN
D&M Holdings Inc.
D&M BUILDING, 2-1 NISSHIN-CHO,
KAWASAKI-KU, KAWASAKI-SHI,
KANAGAWA, 210-8569 JAPAN

株式会社 ディーアンドエムホールディングス

本 社 〒210-8569
神奈川県川崎市川崎区日進町2-1 D&Mビル

KOREA
D&M SALES AND MARKETING KOREA LTD.
CHUNG JIN B/D., #1001,
53-5, WONHYORO 3 GA, YONGSAN-GU,
SEOUL, 140-719, KOREA
PHONE : +82 - 2 - 323 - 2155
FAX : +82 - 2 - 323 - 2154

CHINA
D&M SALES AND MARKETING SHANGHAI LTD.
ROOM.808 SHANGHAI AIRPORT CITY TERMINAL
NO.1600 NANJING (WEST) ROAD, SHANGHAI,
CHINA. 200040
TEL : 021 - 6248 - 5151
FAX : 021 - 6248 - 4434

NOTE ON SAFETY :

Symbol ⚠ Fire or electrical shock hazard. Only original parts should be used to replaced any part marked with symbol ⚠.
Any other component substitution (other than original type), may increase risk of fire or electrical shock hazard.

安全上の注意：

⚠がついている部品は、安全上重要な部品です。必ず指定されている部品番号のものを使用して下さい。

SHOCK, FIRE HAZARD SERVICE TEST :

CAUTION : After servicing this appliance and prior to returning to customer, measure the resistance between either primary AC cord connector pins (with unit NOT connected to AC mains and its Power switch ON), and the face or Front Panel of product and controls and chassis bottom.
Any resistance measurement less than 1 Megohms should cause unit to be repaired or corrected before AC power is applied, and verified before it is return to the user/customer.
Ref. UL Standard No. 60065.

In case of difficulties, do not hesitate to contact the Technical Department at above mentioned address.

1. TECHNICAL SPECIFICATIONS

AUDIO CHARACTERISTICS

Channels ..... 2 channels
Frequency response ..... 2 Hz to 20 kHz
Dynamic range ..... 100 dB
Signal-to-noise ratio (A-weighted) ..... 110 dB
Channel separation (1 kHz) ..... 110 dB
Harmonic distortion (1 kHz) 0.002%
Wow & flutter ..... Precision of quartz
Audio output ..... 2 V rms, stereo
Headphone output (variable maximum) ..... 16 mW/32 ohms
Digital output
  Coaxial output (pin jack) ..... 0.5 Vp-p, 75 ohms
  Optical output (square optical connector) ..... -19 dBm

OPTICAL READOUT SYSTEM

Laser ..... AlGaAs semiconductor
Wavelength ..... 780 nm

SIGNAL SYSTEM

Sampling frequency ..... 44.1 kHz
Quantization ..... 16-bit linear PCM

POWER SUPPLY

Power requirement [/F] ..... AC 100V 50/60Hz
[/N] ..... AC 230V 50Hz
[/U] ..... AC 120V 60Hz
Power consumption [ALL] 18W
Standby power consumption [/F/N] ..... 0.6 W
[/N] ..... 0.7 W

DIMENSIONS

Unit: mm (in)

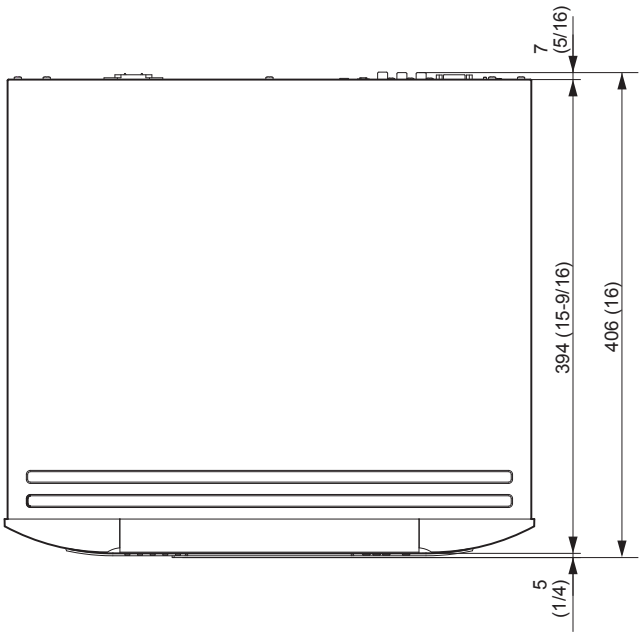

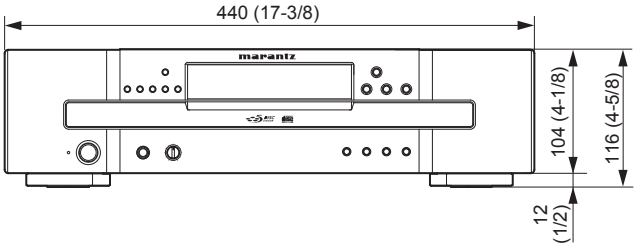

2. SERVICE HINTS AND TOOLS

SERVICE HINTS

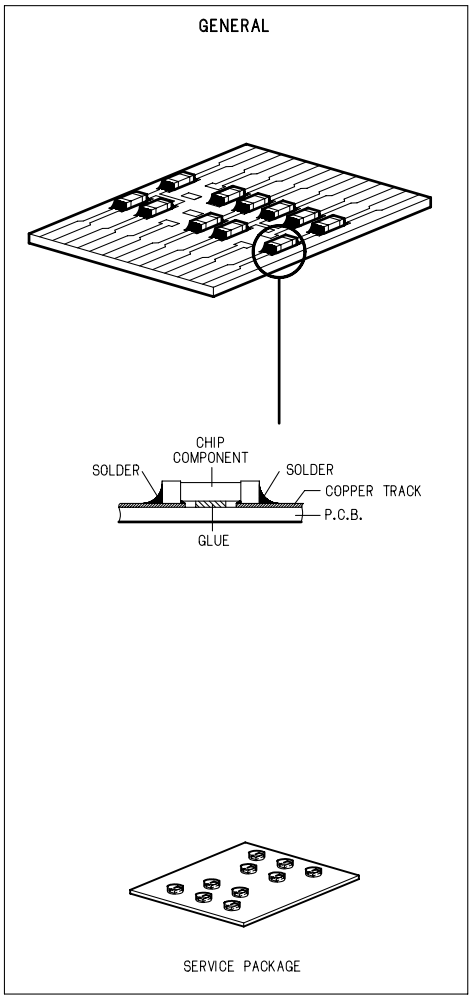

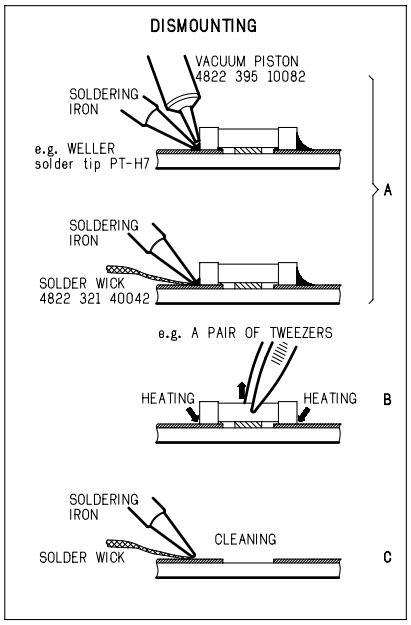

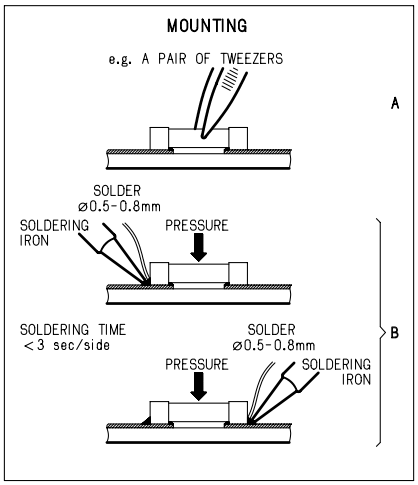

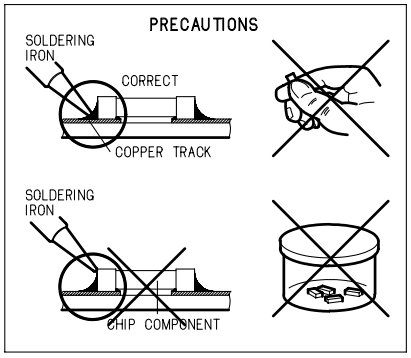

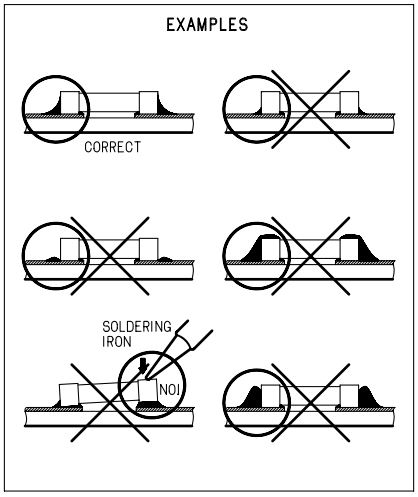

SERVICE TOOLS

Audio signals disc	4822 397 30184 or TCD-784
Disc without errors +	
Disc with DO errors, black spots and fingerprints	4822 397 30245 (SBC444A) or TCD-726
Disc (65 min 1kHz) without no pause	4822 397 30155
Max. diameter disc (58.0 mm)	4822 397 60141
Torx screwdrivers	
Set (straight)	4822 395 50145
Set (square)	4822 395 50132
13th order filter	4822 395 30204
DVD test disc (PAL)	4822 397 10131
DVD test disc (NTSC) ALMEDIO	TDV-540

070703MZ

3. WARNING AND LASER SAFETY INSTRUCTIONS

GB **WARNING**

All ICs and many other semi-conductors are susceptible to electrostatic discharges (ESD). Careless handling during repair can reduce life drastically.
When repairing, make sure that you are connected with the same potential as the mass of the set via a wrist wrap with resistance.
Keep components and tools also at this potential.

ESD

NL **WAARSCHUWING**

Alle IC's en vele andere halfgeleiders zijn gevoelig voor elektrostatische ontladingen (ESD).
Onzorgvuldig behandelen tijdens reparatie kan de levensduur drastisch doen verminderen.
Zorg ervoor dat u tijdens reparatie via een polsband met weerstand verbonden bent met hetzelfde potentiaal als de massa van het apparaat.
Houd componenten en hulpmiddelen ook op ditzelfde potentiaal.

F **ATTENTION**

Tous les IC et beaucoup d'autres semi-conducteurs sont sensibles aux décharges statiques (ESD).
Leur longévité pourrait être considérablement écourtée par le fait qu'aucune précaution n'est prise a leur manipulation.
Lors de réparations, s'assurer de bien être relié au même potentiel que la masse de l'appareil et enfiler le bracelet serti d'une résistance de sécurité.
Veiller a ce que les composants ainsi que les outils que l'on utilise soient également a ce potentiel.

D **WARNUNG**

Alle IC und viele andere Halbleiter sind empfindlich gegen elektrostatische Entladungen (ESD).
Unsorgfältige Behandlung bei der Reparatur kann die Lebensdauer drastisch vermindern.
Sorgen sie dafür, das Sie im Reparaturfall über ein Pulsarmband mit Widerstand mit dem Massepotential des Gerätes verbunden sind.
Halten Sie Bauteile und Hilfsmittel ebenfalls auf diesem Potential.

I **AVVERTIMENTO**

Tutti IC e parecchi semi-conduttori sono sensibili alle scariche statiche (ESD).
La loro longevita potrebbe essere fortemente ridatta in caso di non osservazione della piu grande cauzione alla loro manipolazione.
Durante le riparazioni occorre quindi essere collegato allo stesso potenziale che quello della massa dell'apparecchio tramite un braccialetto a resistenza.
Assicurarsi che i componenti e anche gli utensili con quali si lavora siano anche a questo potenziale.

GB

Safety regulations require that the set be restored to its original condition and that parts which are identical with those specified be used.

NL

Veiligheidsbepalingen vereisen, dat het apparaat in zijn oorspronkelijke toestand wordt terug gebracht en dat onderdelen, identiek aan de gespecifieerde worden toegepast.

D

Bei jeder Reparatur sind die geltenden Sicherheitsvorschriften zu beachten.
Der Originalzustand des Gerats darf nicht verandert werden.
Fur Reparaturen sind Original-Ersatzteile zu verwenden.

I

Le norme di sicurezza esigono che l'apparecchio venga rimesso nelle condizioni originali e che siano utilizzati pezzi di ricambiago idetici a quelli specificati.

F

Les normes de sécurité exigent que l'appareil soit remis a l'état d'origine et que soient utilisées les pièces de rechange identiques à celles spécifiées.

"Pour votre sécurité, ces documents doivent être utilisés par des spécialistes agrées, seuls habilités à réparer votre appareil en panne."

LASER SAFETY

This unit employs a laser. Only a qualified service person should remove the cover or attempt to service this device, due to possible eye injury.

USE OF CONTROLS OR ADJUSTMENTS OR PERFORMANCE OF PROCEDURE OTHER THAN THOSE SPECIFIED HEREIN MAY RESULT IN HAZARDOUS RADIATION EXPOSURE.

AVOID DIRECT EXPOSURE TO BEAM

WARNING

The use of optical instruments with this product will increase eye hazard.
Repair handling should take place as much as possible with a disc loaded inside the player

WARNING LOCATION: INSIDE ON LASER COVERSHIELD

CAUTION VISIBLE AND INVISIBLE LASER RADIATION WHEN OPEN AVOID EXPOSURE TO BEAM
ADVARSEL SYNLIG OG USYNLIG LASERSTRÅLING VED ÅBNING UNDGÅ UDSÆTTELSE FOR STRÅLING
ADVARSEL SYNLIG OG USYNLIG LASERSTRÅLING NÅR DEKSEL Å PNES UNNGÅ EKSPONERING FOR STRÅLEN
VARNING SYNLIG OCH OSYNLIG LASERSTRÅLNING NÄR DENNA DEL ÄR ÖPPNAD BETRAKTA EJ STRÅLEN
VARO! AVATT AESSA OLET ALTTIINA NÄKYVÄLLE JA NÄKYMÄTTÖMÄLLE LASER SÄTEILYLLE. ÄLÄ KATSO SÄTEESEEN
VORSICHT SICHTBARE UND UNSICHTBARE LASERSTRAHLUNG WENN ABDECKUNG GEÖFFNET NICHT DEM STRAHL AUSSETSEN
DANGER VISIBLE AND INVISIBLE LASER RADIATION WHEN OPEN AVOID DIRECT EXPOSURE TO BEAM
ATTENTION RAYONNEMENT LASER VISIBLE ET INVISIBLE EN CAS D'OUVERTURE EXPOSITION DANGEREUSE AU FAISCEAU

4. CAUTION

1: Do not forcibly close the CD door when the power is off.

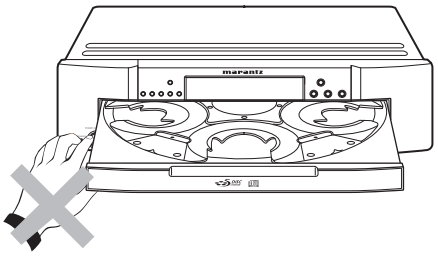

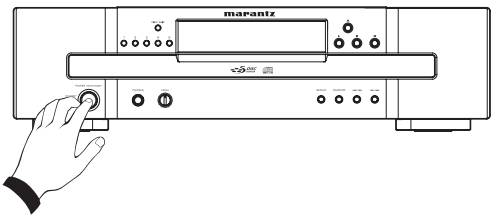

- Do not switch off the power when the CD door is open.

- To avoid damage, please don't switch off the power until "no disc" or "time code" is read on the display, always using the OPEN/CLOSE button to close the CD Door.

2: To prevent destroying the anti-static protection for the mechanism, please kindly be noted of the following important instruction for installing/disassembling the mechanism:

a. When disassembling the mechanism, please make sure to turn off power and short the Anti-static protection welding point before removing the FFC cable between mechanism and PWB.

b. When assembling the mechanism, please make sure to connect the FFC cable and PWB before removing the Anti-static welding point, then, turn on the power.

ピックアップの損傷避けるため下記の作業を行ってください。

a. CD メカを取りはずす場合、まず電源が切れていることを確認します。CD メカと PWB の FFC ケーブルを外す前に、２つのランドを半田でショートします。

b. CD メカを取り付ける場合、CD メカの FFC ケーブルと PWB を接続後、ショートランドの半田を取り除きます。

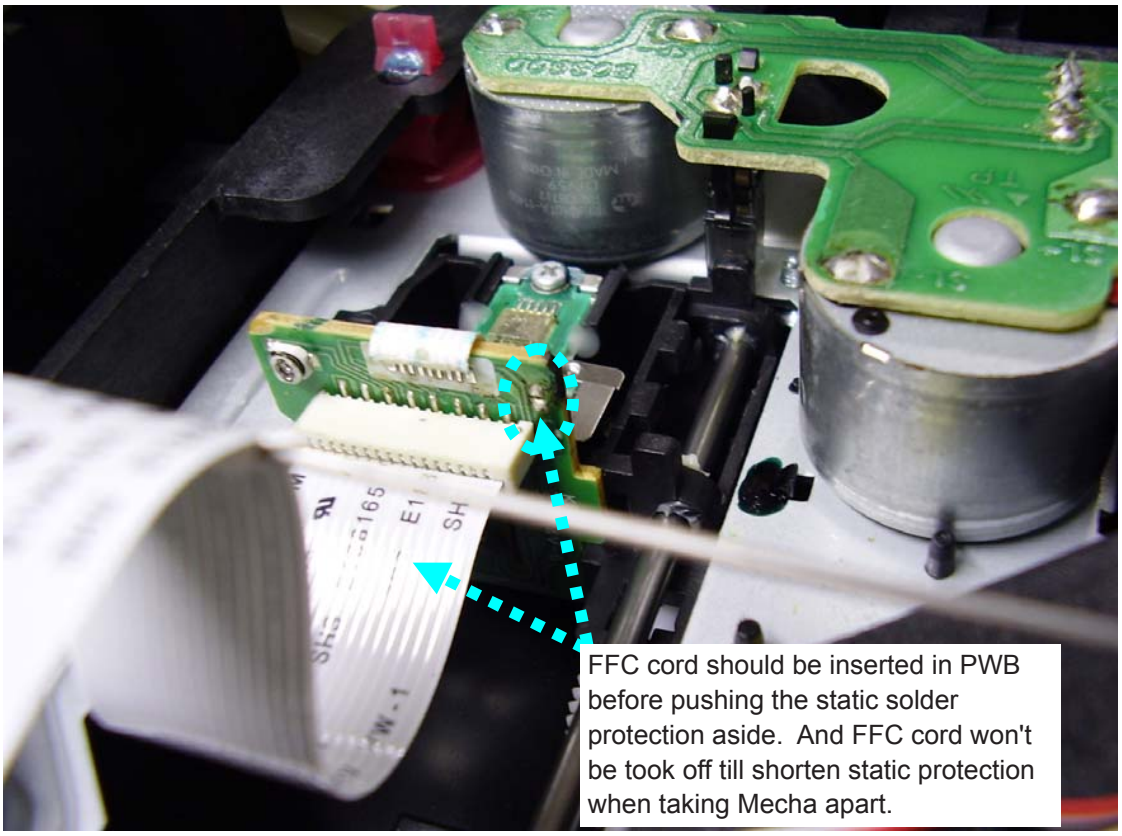

3: Please be aware of wearing an anti-static ring before repairing.
It is forbiddance to adjust the laser pick up VR.

レーザーピックアップボリュームは、調整禁止です。

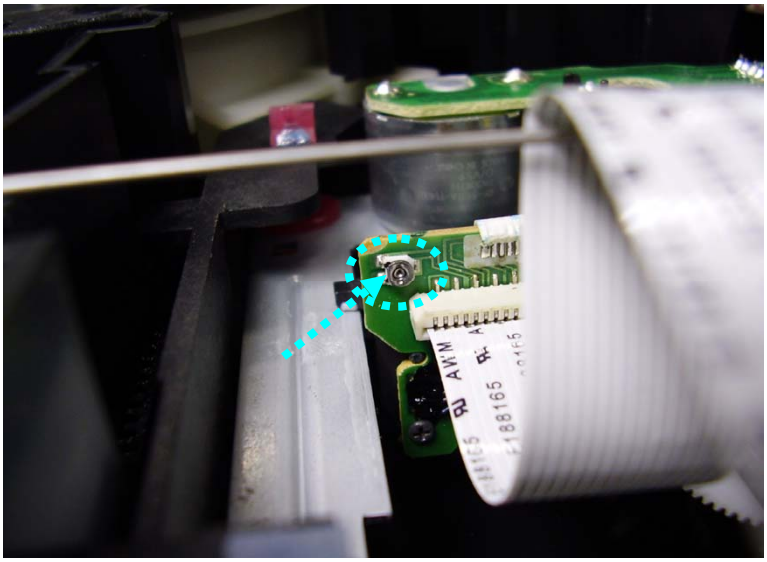

4: NOTES FOR REMOVING SHIPPING SCREWS
Before transporting the player, take out the discs, close the disc tray, set to standby mode and unplug the power cord from the power outlet. Then install the shipping screws by turning them clockwise. Be sure to fasten them securely.

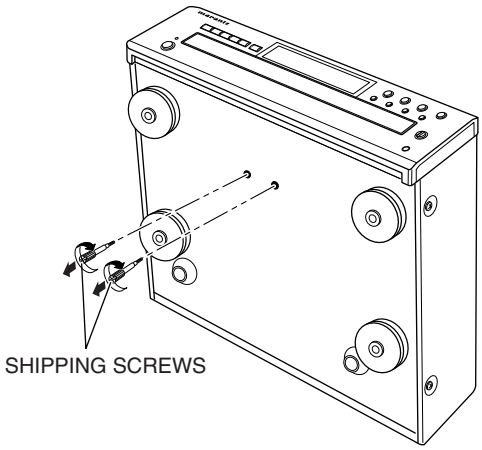

輸送用ネジ取り外しに関する注意

本機の底部に赤色の輸送用ネジ２本がついていますが、本機を輸送するときに使用します。本機を使用する前に、ネジを反時計方向に回して取り外してください。
輸送用ネジがまだ所定の位置にあるままで電源を入れた場合、電源コードをコンセントから抜き、輸送用ネジを取り外してください。ネジは、本機を輸送するときに必要になるため、保管しておいてください。
本機を輸送する前に、ディスクを取り出し、ディスクトレイを閉じ、スタンバイ状態にしてから電源コードをコンセントから抜いてください。次に、輸送用ネジを時計方向に回して取り付けてください。ネジは確実に締めてください。

5. TAKING THE DISC OUT OF EMERGENCY

Move the (A) portion (Screw Head) in the direction of an arrow (B) at a thin lot.

Caution : When turning the (A) portion, Please do not turn the unit over or do not stand. The disc might be damaged.

細い棒等で A 部（ネジの頭）を矢印（B）の方向に動かします。

注意：A 部を動かすとき、セットを反転または立てないでください。ディスクが損傷する恐れがあります。

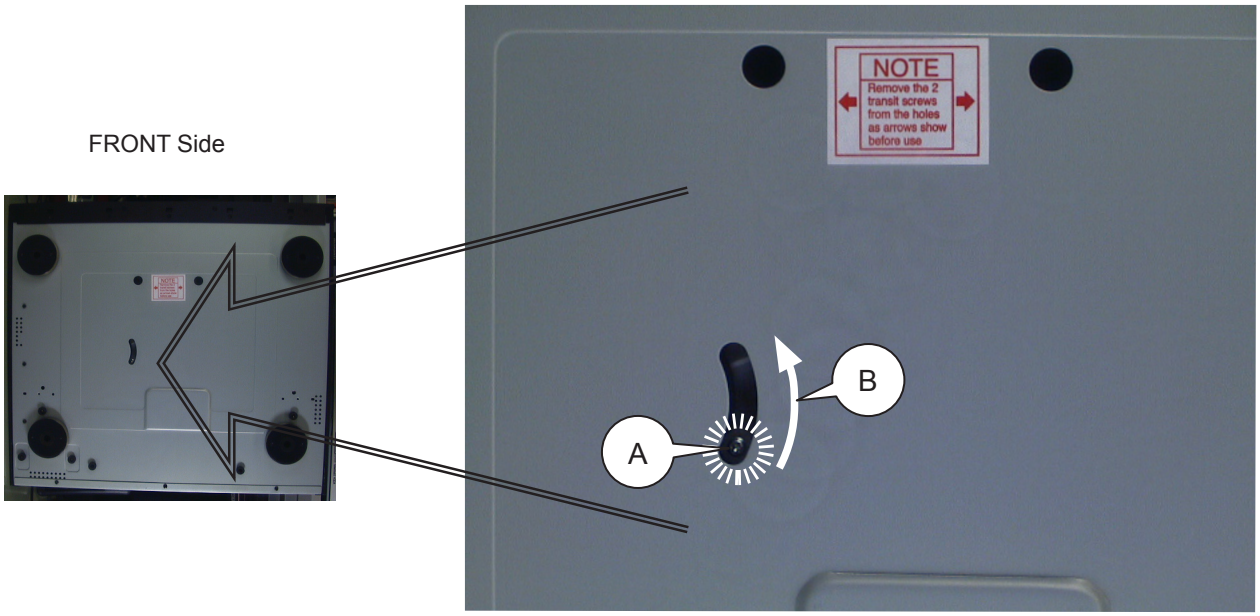

6. SERVICE MODE

1. Firmware Version check

1) Press the POWER ON/STANBY button to turn on the unit.

2) Please check the disc tray and be sure there is no disc in the disc tray.

3) Press STOP(■) and RANDOM button. Microprocessor version is displayed on LCD. The first two codes displays the controller code (ex.“01”), the last two codes displays the buffer/server code. (ex.“03”)

6. SERVICE モード

1. Firmware Version 確認

1) **POWER ON/STANDBY** ボタンを押して、本体の電源を入れます。

2) ディスクトレイにディスクが無いことを確認してください。

3) **STOP**(■) と **RANDOM** ボタンを押します。
ディスプレイにマイコンのバージョンが表示されます。最初の 2 桁 (ex.“01”) は、コントローラーコードを表示します。最後の 2 桁 (ex.“03”) は、バッファ / サーバーコードを表示します。

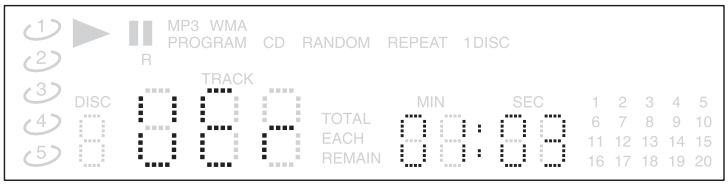

3) Press the **POWER ON/STANDBY** button to turn off the unit.

4. **POWER ON/STANDBY** ボタンを押して、電源を切ります。

2. Error Indication

There are 2 error indications

1) Display will shown "Err" when tray loader can not be finished in 10 secs and if in this situation the loader motor will be stopped.

2) Display will shown "Err" when turntable spindle can not be finished in 10 secs and if in this situation the spindle motor will be stopped.

2. Error 表示

2 つのエラーを表示します。

1) トレイが途中で 10 秒以上停止した場合、ディスプレイに "Err" が表示されます。

2) ターンテーブルスピンドルが 10 秒以上止まる場合、ディスプレイに "Err" が表示されます。

7. UPDATE DSP FIRMWARE PROCEDURE

Necessary Equipment

Update data (cc4003xx.hex)

NOTICE : The xx of update data filename is firmware version.

Write the update file on a disc.

The writing of firmware takes about 60 seconds.

Please check the disc tray and be sure there is no disc in the disc tray.

1.Connect the mains cord into the unit.

2.Press the **POWER ON/STANDBY** button to turn on the unit.

3.Press the **OPEN/CLOSE** button to open the tray.

4.Insert the update disc onto the disc tray.

5.Press the **OPEN/CLOSE** button to close the tray.

6.The unit will read the TOC and **"UP dAtE" (UPDATE)** is displayed on the LCD.

必要機器

Update data (cc4003xx.hex)

注意）アップデートデータのファイル名にある xx はファームウェアのバージョンです。

ファイルをディスクに書き込んでください。

ファームウェアのアップデートにかかる時間はおよそ 60 秒です。

ディスクトレイにディスクが無いことを確認してください。

1.本機に電源コードを接続します。

2.本機の **POWER ON/STANDBY** ボタンを押して、電源を入れます。

3.**OPEN/CLOSE** ボタンを押して、ディスクトレイを開きます。

4.アップデートディスクをディスクトレイに載せます。

5.**OPEN/CLOSE** ボタンを押して、ディスクトレイを閉じます。

6.TOC を読み、ディスプレイに **"UP dAtE" (UPDATE)** が表示されます。

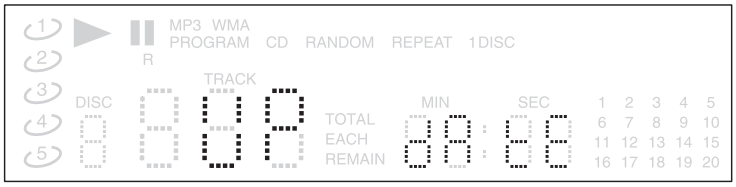

7.When the update is done the upgrade version will displayed on the LCD **(UEr xx:xx")**.

7.アップデートがおこなわれ、ディスプレイに **(UEr xx:xx")** が表示されます。

ex)

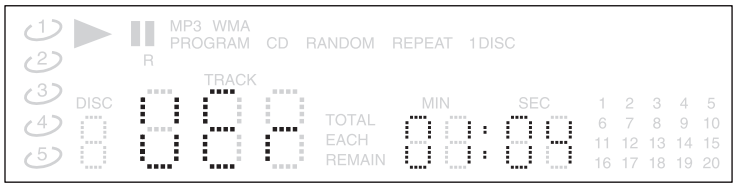

8.Press the **OPEN/CLOSE** button to open the tray.

9.Remove the update disc from the tray.

10. Press the **OPEN/CLOSE** button to close the tray.

11. Press the **POWER ON/STANDBY** button to turn off the unit.

12. Disconnect the mains cord.

The firmware has been updated.

To check the version number of the firmware, see the chapter no.6 SERVICE MODE.

8.**OPEN/CLOSE** ボタンを押して、ディスクトレイを開きます。

9.ディスクトレイからアップデートディスクを取り出します。

10.**OPEN/CLOSE** ボタンを押して、ディスクトレイを閉じます。

11.本機の **POWER ON/STANDBY** ボタンを押して、電源を切ります。

12.本機から電源コードを外します。

ファームウェアのアップデートは完了です。

6.SERVICE MODE を参照し、ファームウェアのバージョンを確認します。

8. WIRING DIAGRAM

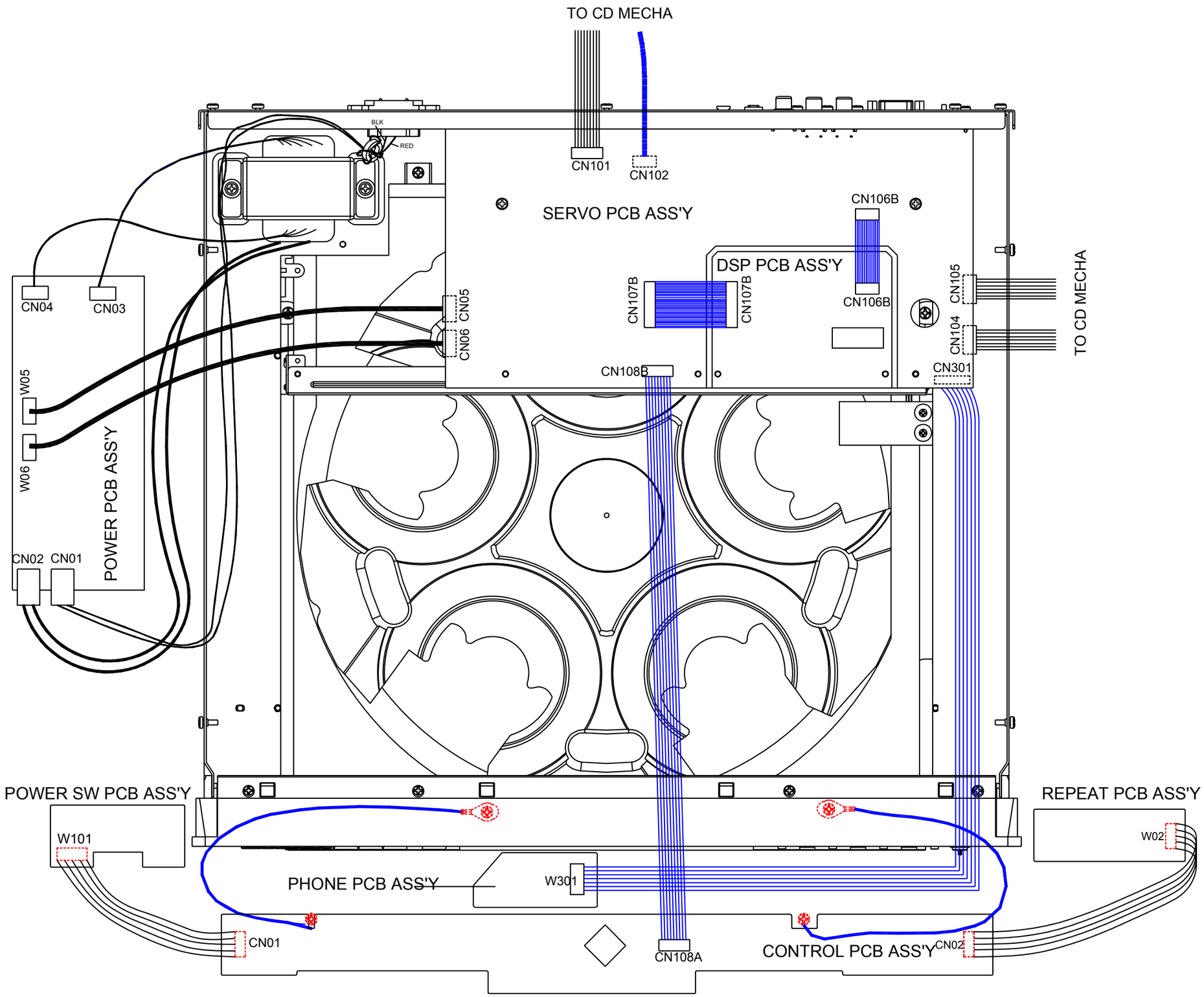

9. BLOCK DIAGRAM

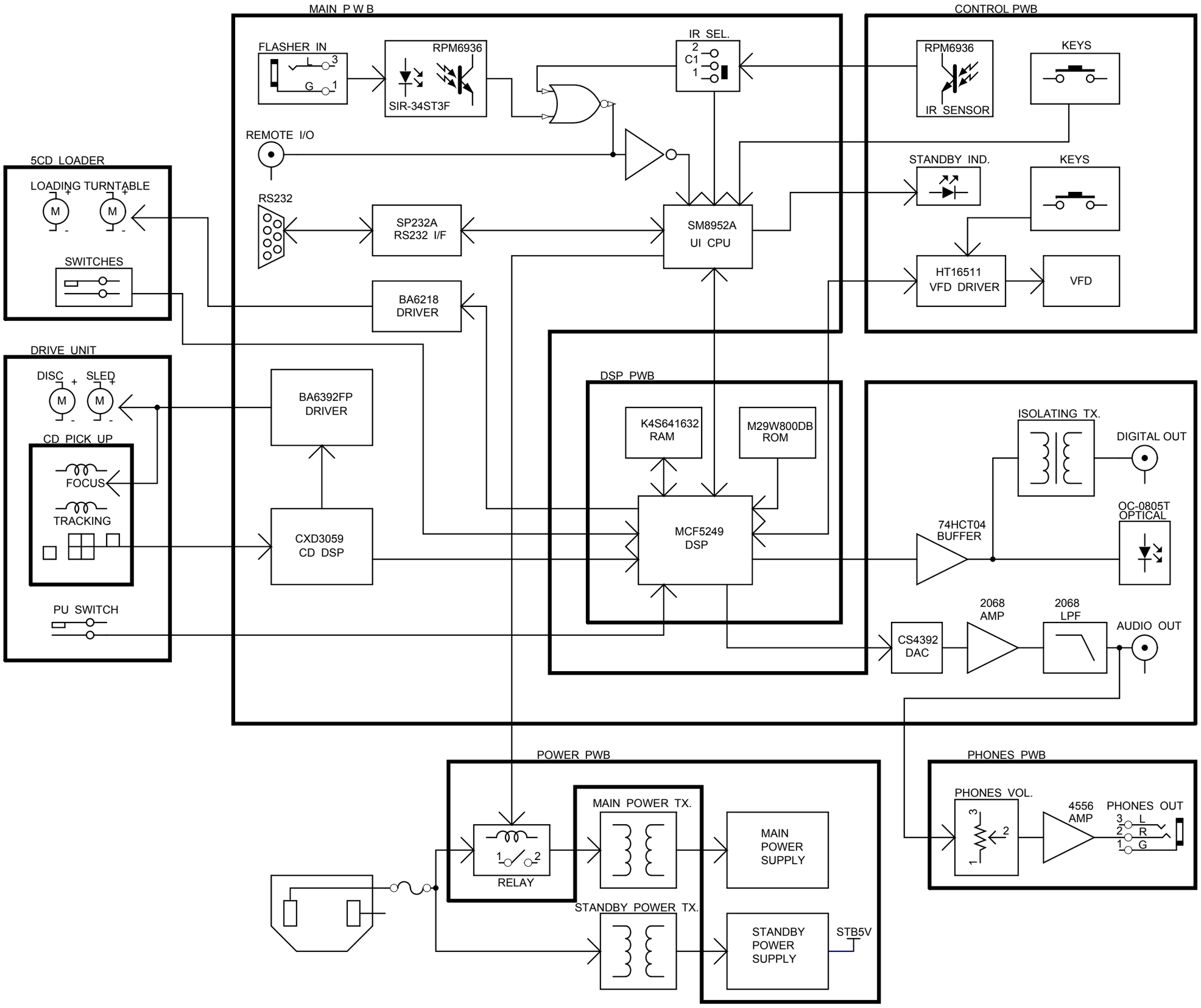

10. SCHEMATIC DIAGRAM

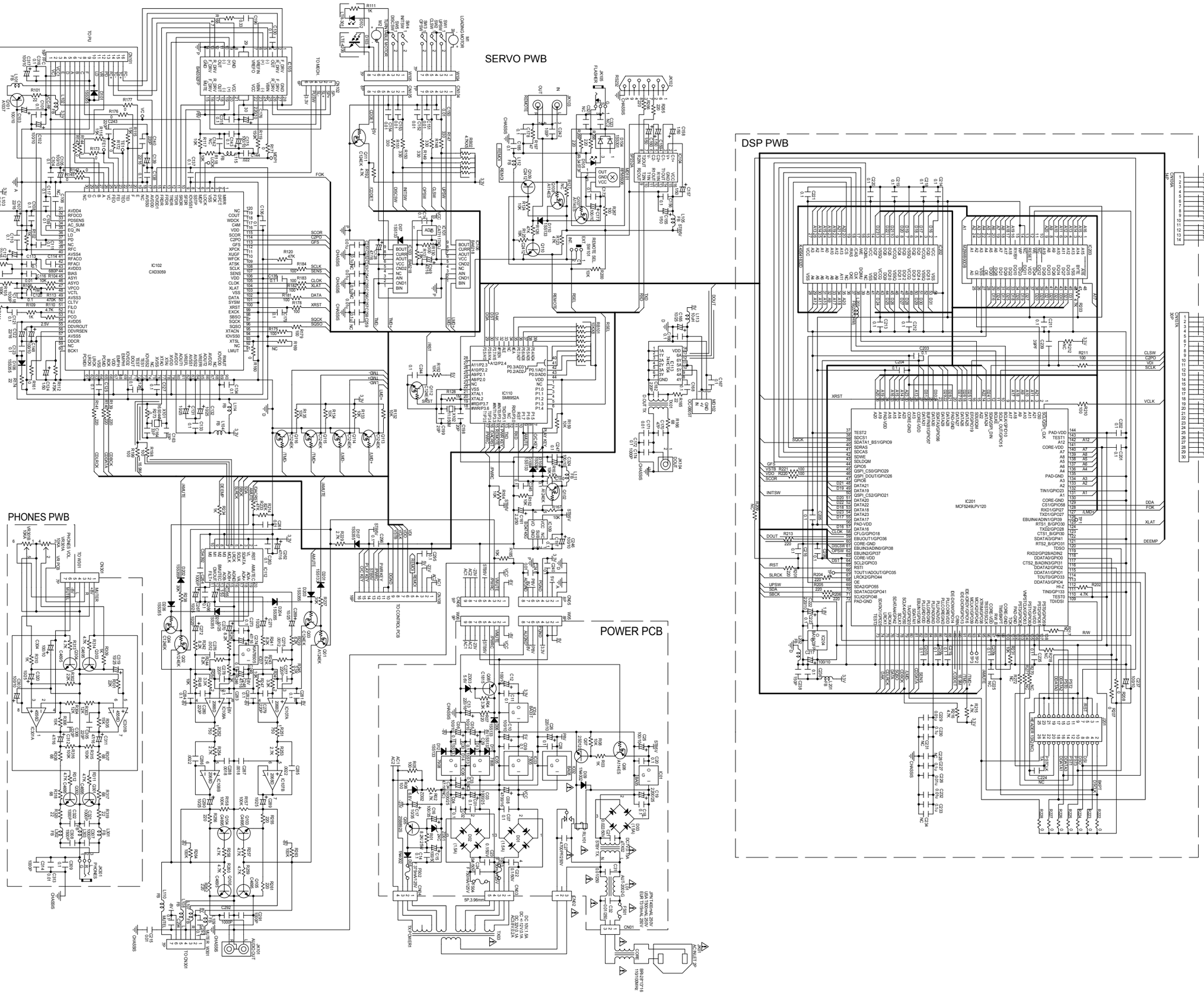

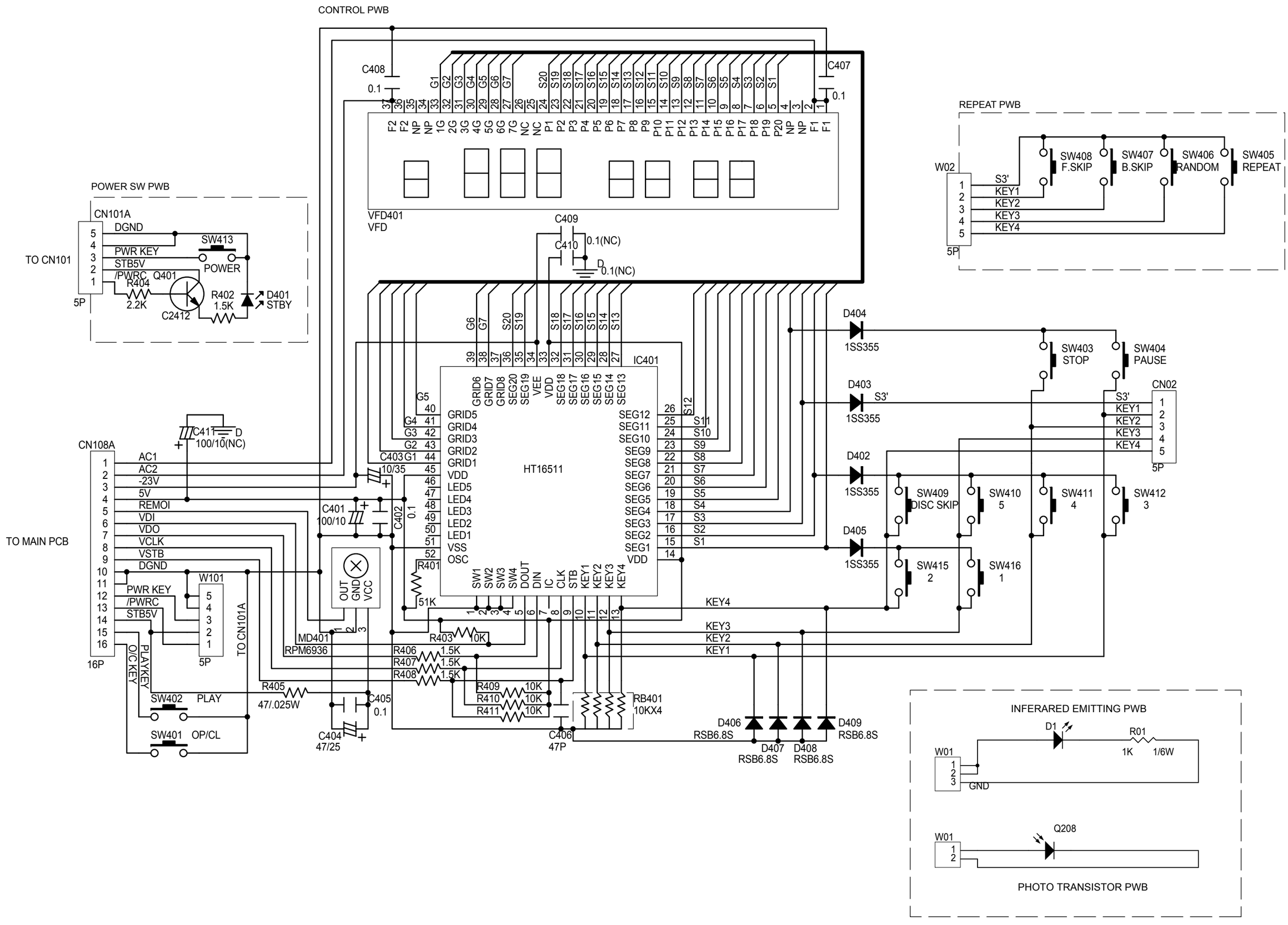
CONTROL PWB
C408
0.1
C407
0.1
VFD401
VFD
C409
C410
0.1(NC)
D
0.1(NC)
POWER SW PWB
CN101A
TO CN101
5P
DGND
PWR KEY
STB5V
/PWRC
SW413
POWER
Q401
R404
2.2K
C2412
R402
1.5K
D401
STBY
REPEAT PWB
W02
5P
S3'
KEY1
KEY2
KEY3
KEY4
SW408
F.SKIP
SW407
B.SKIP
SW406
RANDOM
SW405
REPEAT
IC401
HT16511
GRID5
GRID4
GRID3
GRID2
GRID1
VDD
LED5
LED4
LED3
LED2
LED1
VSS
OSC
SEG12
SEG11
SEG10
SEG9
SEG8
SEG7
SEG6
SEG5
SEG4
SEG3
SEG2
SEG1
VDD
D404
1SS355
D403
1SS355
D402
1SS355
D405
1SS355
SW403
STOP
SW404
PAUSE
CN02
5P
SW409
DISC SKIP
SW410
5
SW411
4
SW412
3
SW415
2
SW416
1
CN108A
16P
AC1
AC2
-23V
5V
REMOI
VDI
VDO
VCLK
VSTB
DGND
PWR KEY
/PWRC
STB5V
TO MAIN PCB
W101
5P
TO CN101A
C411
100/10(NC)
C403
10/35
C401
100/10
C402
0.1
R401
51K
OUT
GND
VCC
MD401
RPM6936
R403
10K
R406
1.5K
R407
1.5K
R408
1.5K
R409
10K
R410
10K
R411
10K
R405
47/.025W
C405
0.1
C404
47/25
C406
47P
RB401
10KX4
D406
RSB6.8S
D407
RSB6.8S
D408
RSB6.8S
D409
RSB6.8S
PLAYKEY
O/C KEY
SW402
PLAY
SW401
OP/CL
INFERARED EMITTING PWB
D1
R01
1K
1/6W
W01
GND
Q208
PHOTO TRANSISTOR PWB

11. PARTS LOCATION

SERVO A PWB

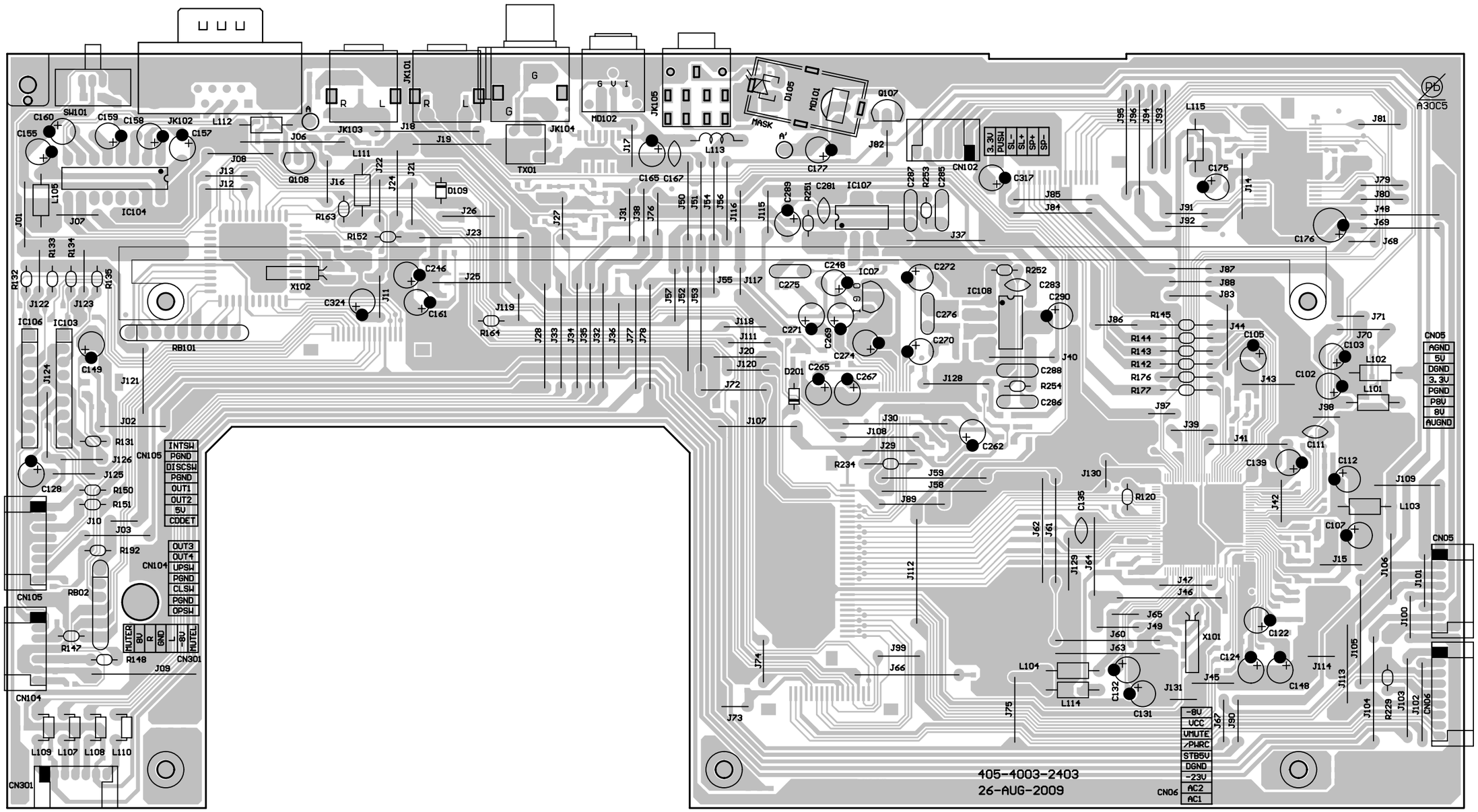

SERVO B PWB

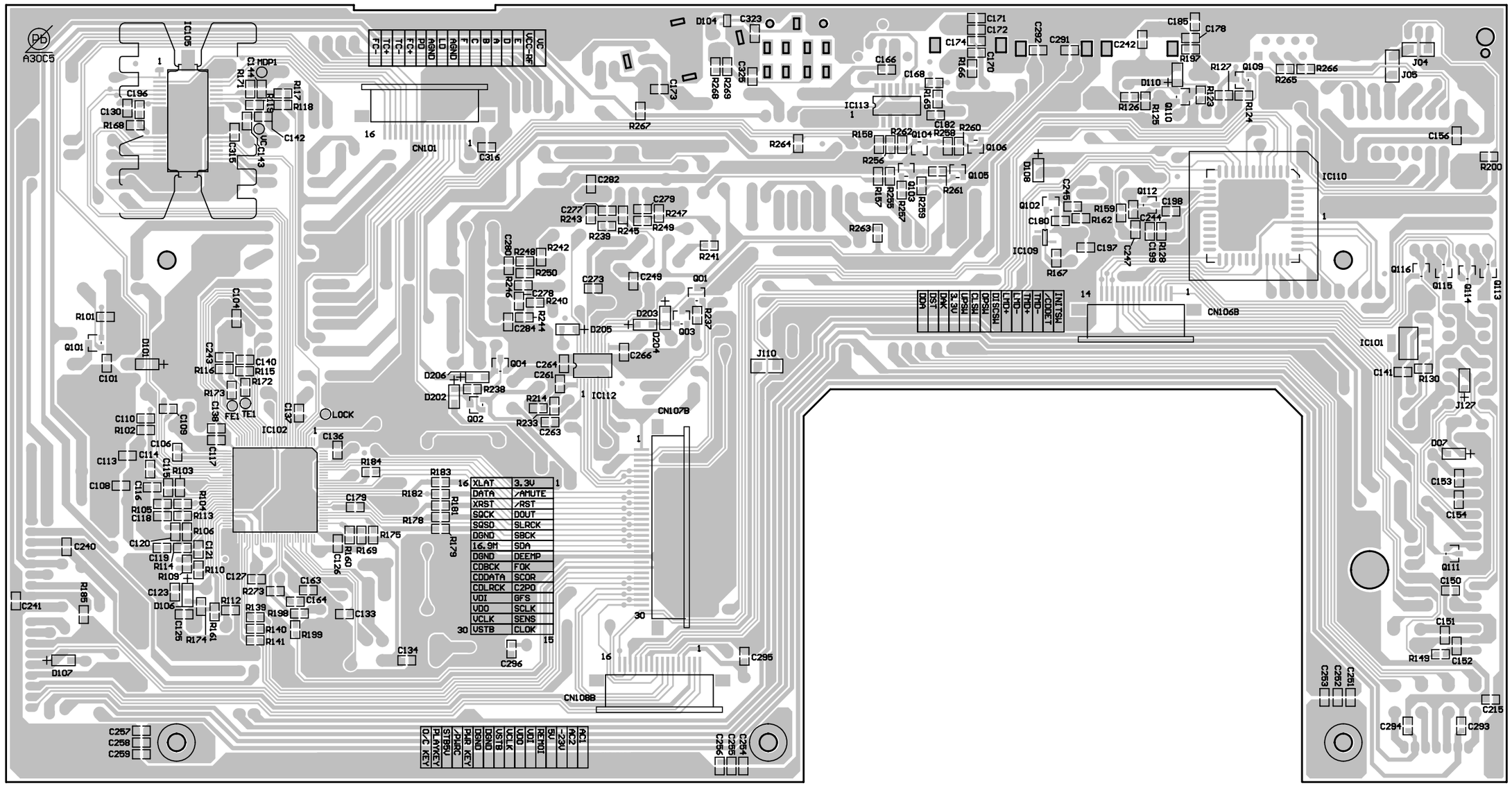

鉛フリー半田

半田付けには、鉛フリー半田 (Sn-Ag-Cu) を使用してください。

Lead-free Solder

When soldering, use the Lead-free Solder (Sn-Ag-Cu).

CONTROL A PWB

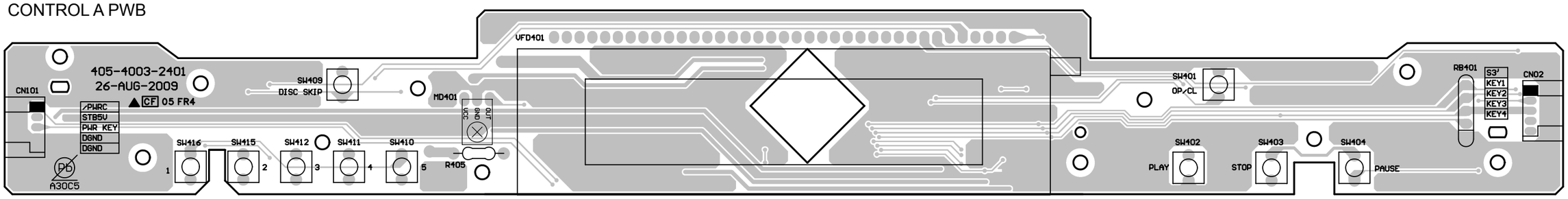

CONTROL B PWB

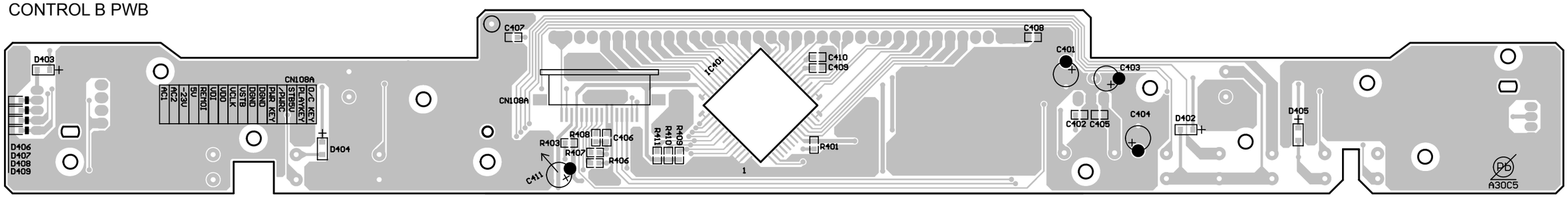

DSP A PWB

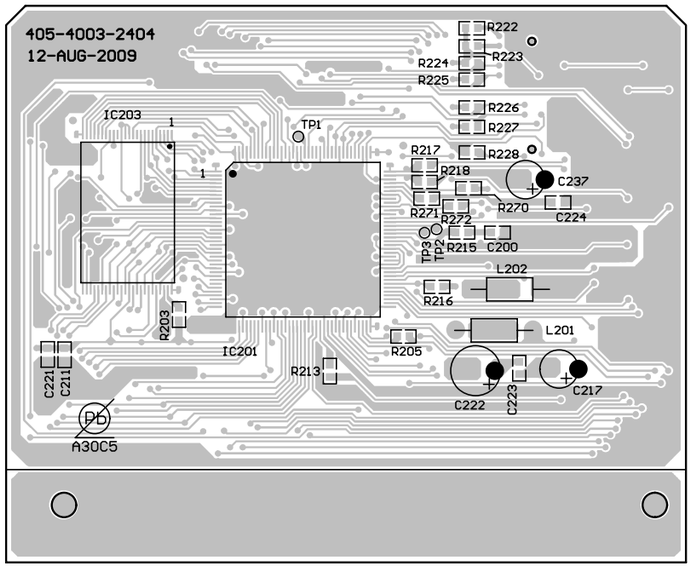

DSP B PWB

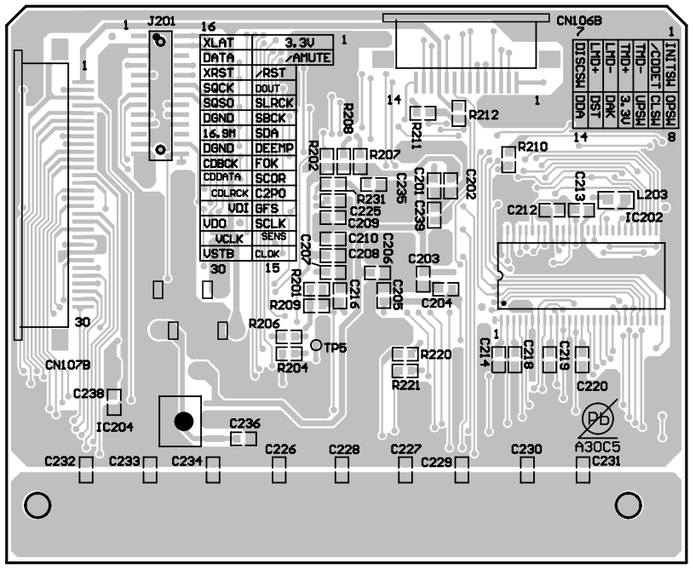

鉛フリー半田
半田付けには、鉛フリー半田 (Sn-Ag-Cu) を使用してください。

Lead-free Solder
When soldering, use the Lead-free Solder (Sn-Ag-Cu).

POWER A PWB

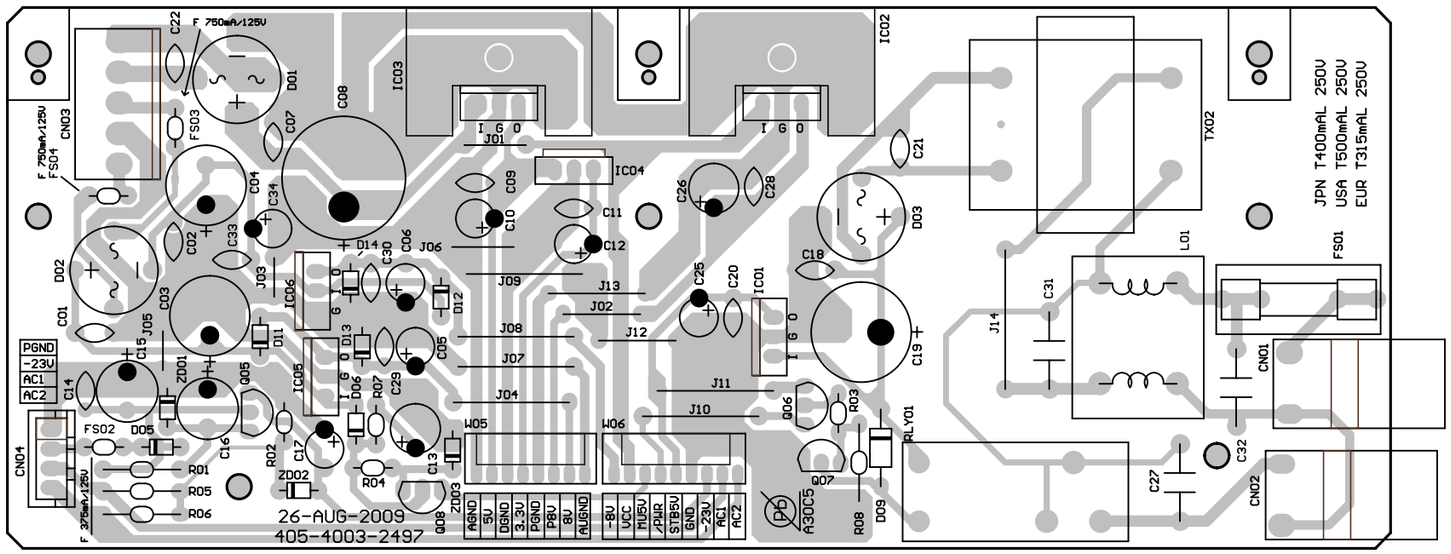

POWER B PWB

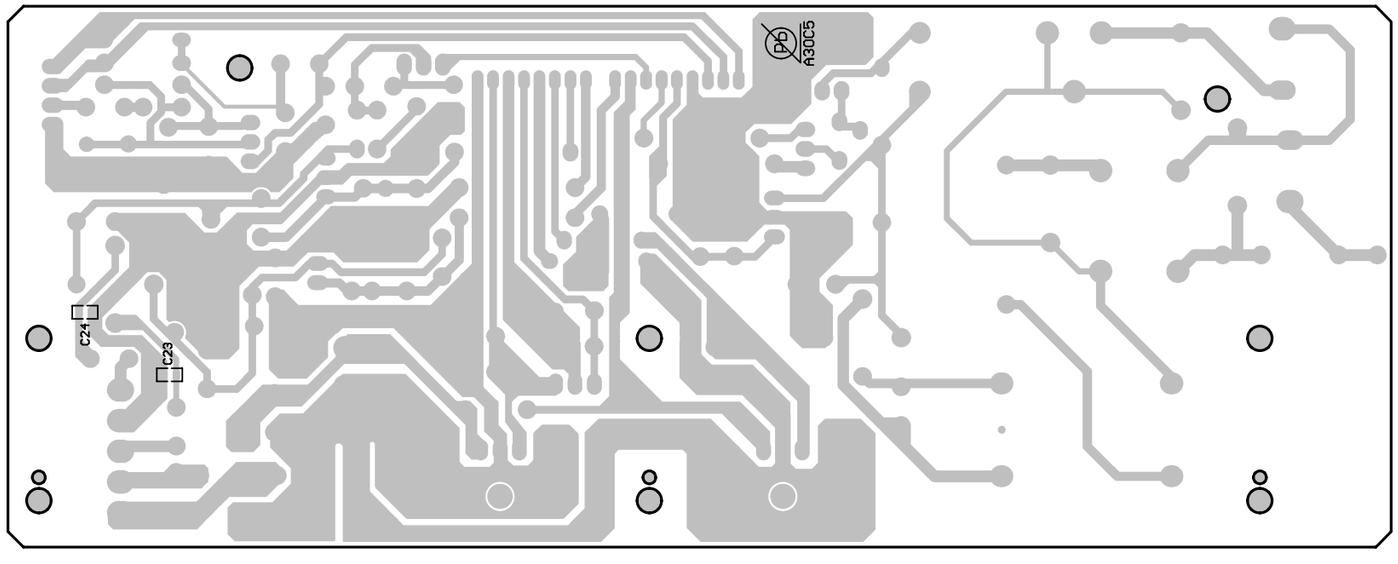

PHONE A PWB

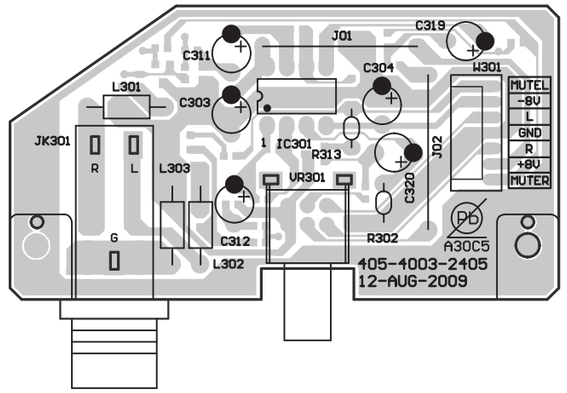

PHONE B PWB

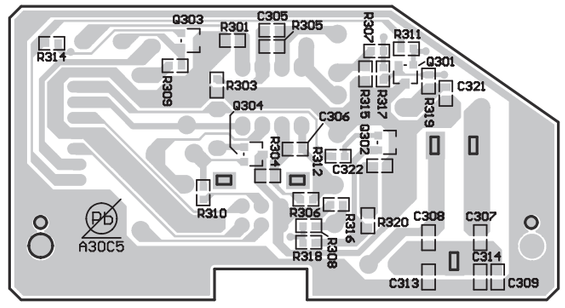

鉛フリー半田
半田付けには、鉛フリー半田 (Sn-Ag-Cu) を使用してください。

Lead-free Solder
When soldering, use the Lead-free Solder (Sn-Ag-Cu).

REPEAT A PWB

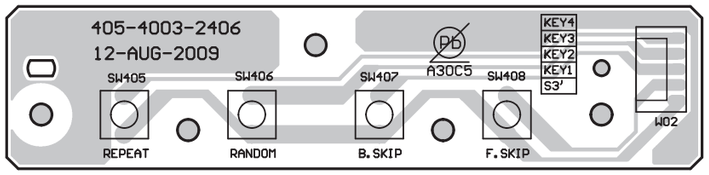

REPEAT B PWB

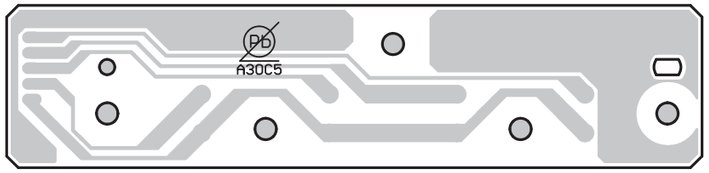

POWER SW A PWB

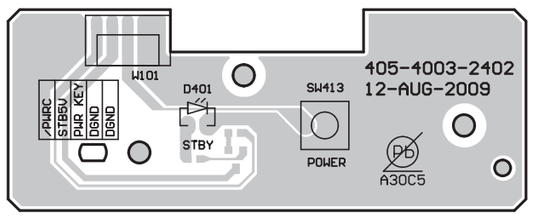

POWER SW B PWB

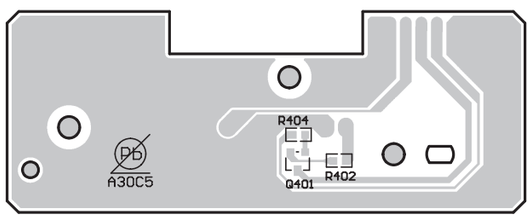

鉛フリー半田
半田付けには、鉛フリー半田 (Sn-Ag-Cu) を使用してください。

Lead-free Solder
When soldering, use the Lead-free Solder (Sn-Ag-Cu).

PHOTO TRANSISTOR A PWB

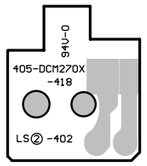

PHOTO TRANSISTOR B PWB

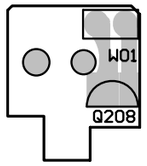

INFERARED EMITTING A PWB

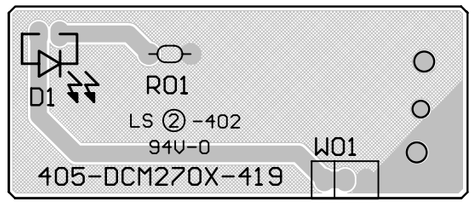

12. EXPLODED VIEW AND PARTS LIST

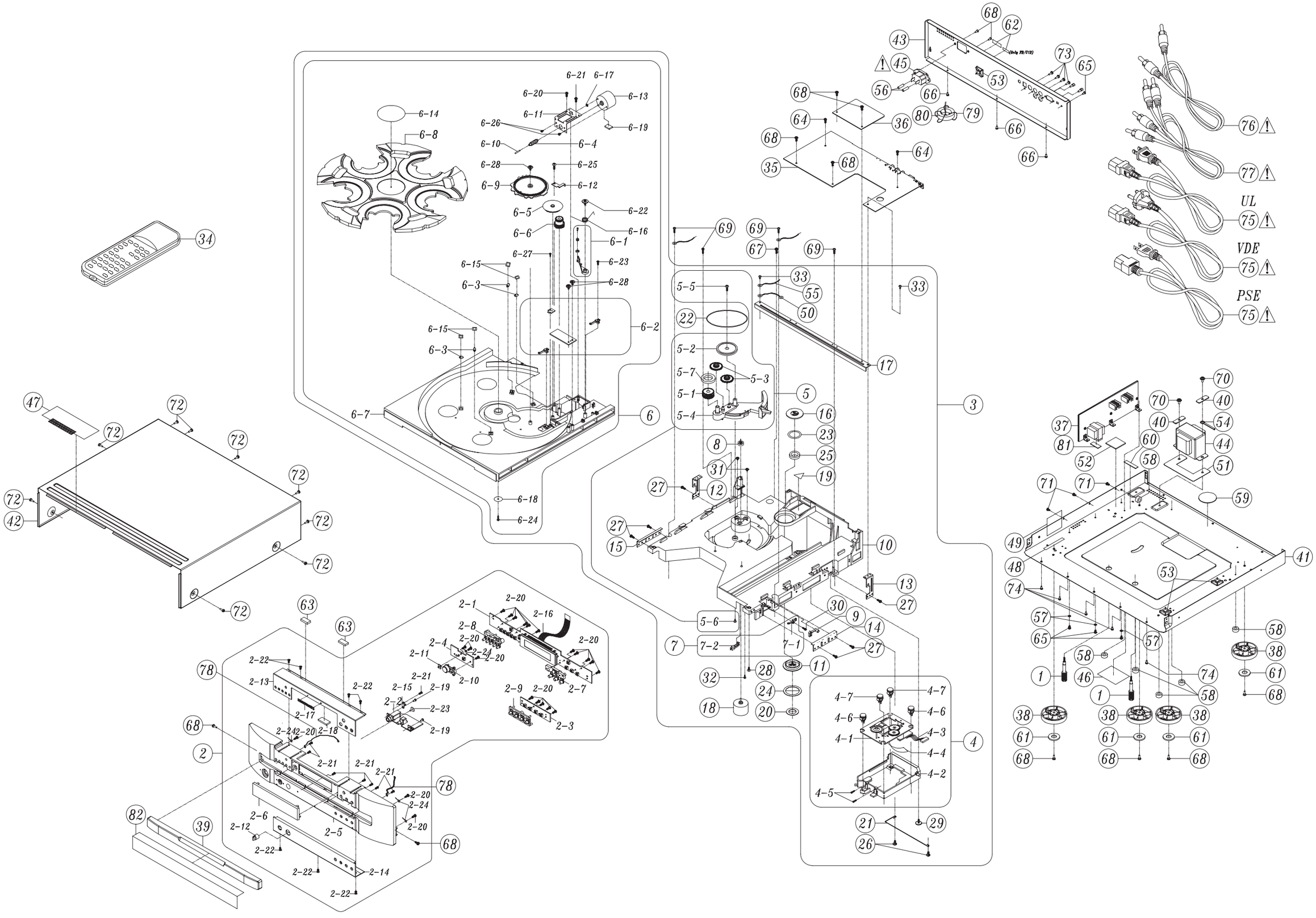

POS. NO.	VERS. COLOR	PART NO. (FOR EUR)	PART NO. (MZ)	PART NAME	DESCRIPTION		
2		nsp	nsp	PANEL	FRONT PANEL ASS'Y	701-4003-4627	
2-1		nsp	nsp	PWB ASSY	CONTROL PWB ASS'Y	704-4003-8508	
2-2		nsp	nsp	PWB ASSY	PHONE PWB ASS'Y	704-4003-8511	
2-3		nsp	nsp	PWB ASSY	REPEAT PWB ASS'Y	704-4003-8512	
2-4		nsp	nsp	PWB ASSY	POWER SW PWB ASS'Y	704-4003-8513	
2-5A		941402002510M	941402002510M	PANEL	FRONT PANEL SUB ASSY	701-4003-4705	
2-5		nsp	nsp	CHASSIS	FRONT PANEL	100-4003-2658	
2-6		nsp	nsp	BUTTON	DECORATION	100-4003-2660	
2-11		nsp	nsp	LENS	LED LENS	100-4003-2665	
2-7		941411002420M	941411002420M	KNOB	A KNOB ASS'Y	100-4003-2661	
2-8		941411002430M	941411002430M	KNOB	B KNOB ASS'Y	100-4003-2662	
2-9		941411002440M	941411002440M	KNOB	C KNOB ASS'Y	100-4003-2663	
2-10		941411002450M	941411002450M	KNOB	POWER KNOB	100-4003-2664	
2-12		941412002460M	941412002460M	KNOB	VOL. KNOB	100-4003-2681	
2-13		941402002470M	941402002470M	PANEL	UPPER FRONT PANEL	300-4003-1700	
2-14		941402002480M	941402002480M	PANEL	LOWER FRONT PANEL	300-4003-1701	
2-15		nsp	nsp	BRACKET	GROUND PLATE	300-4003-1762	
2-16		941606002170S	941606002170S	FPC	16P 1.0 FFC CABLE	406-4003-1093	
2-17		421410006004M	421410006004M	BADGE	BADGE	CGB1A206	
2-18		nsp	nsp	BUFFER	CUSHION	612-4001-241	
2-24		nsp	nsp		WINDING FIXTUR	300-HM510B-224	
3		nsp	nsp	MECHANISM	5CD LOADER ASS'Y	704-390SM-8222	
4		nsp	nsp	MECHANISM	CD HEAD TRACKING ASS'Y	701-390SM-4491	⚠2
4-1		941302002350M	941302002350M	MECHANISM	PICKUP ASS'Y(DA11T3CNF)	704-MK10-7956	⚠2
4-2		nsp	nsp	HOLDER	CD DECK HOLDER	100-KMD550-1220B	
4-3		nsp	nsp	CONN. CORD	6P CONN. WIRE L=230MM P=2.0MM	404-KMD5000-663	
4-4		nsp	nsp	FPC	16PIN P=1.0MM L=210MM	406-390SM-1044	
4-6		nsp	nsp	DUMPER	RUBBER (RED SILICA GEL)	604-KMD550-117	
4-7		nsp	nsp	DUMPER	RUBBER (PRIMARY COLORS)	604-KMD550-118	
5		00D9410042905	00D9410042905	GEAR	GEAR SLIDE PLATE ASSY	701-KMD550-1603	
5-1		nsp	nsp	GEAR	S.GEAR	100-KMD280-727	
5-2		nsp	nsp	BELT	BELT GEAR	100-KMD280-732B	
5-3		nsp	nsp	GEAR	S.GEAR	100-KMD280-734	
5-4		nsp	nsp	GEAR	GEAR SET	100-KMD550-860D2	
5-7		nsp	nsp	WASHER	WASHER(Φ13*8.1*0.4t)	606-CMP1000-187	
6		941311002360M	941311002360M	TRAY	TRAY ASS'Y	701-DCM280-3311A	
6-1		nsp	nsp	LEVER	CORRECTING LEVER ASS'Y	701-KMD550-1593	
6-2		nsp	nsp	CONN. CORD	8P CONNECTOR WIRE ASS'Y	704-KMD550B-2130	
6-3		nsp	nsp	ROLLER	WHEEL	100-KMD280-729	
6-4		nsp	nsp	GEAR	SPIRAL GEAR	100-KMD280-731A	
6-5		nsp	nsp	GEAR	MIDDLE GEAR	100-KMD280-733	
6-6		nsp	nsp	GEAR	TRANSFER GEAR	100-KMD280-736A	
6-7		nsp	nsp	TRAY	BASE	100-KMD550-1214C	
6-8		nsp	nsp	TRAY	DISK	100-4001-1215A	
6-9		nsp	nsp	GEAR	DRIVE GEAR	100-KMD550-1216	
6-10		nsp	nsp	SHAFT	SHAFT	200-KMD280-174	
6-11		nsp	nsp	MOTOR	MOTOR FIXED PLATE	300-KMD550-262	
6-12		nsp	nsp	STOPPER	FORWARD GEAR FIXED IRON	300-KMD280-305	
6-13		90M-MM001360R	90M-MM001360R	MOTOR	MOTOR(MEN-7E2T5,DC12V)	401-MK7-043A	
6-14		nsp	nsp	SHEET	FIXED SHEET	501-KMD550-1099	
6-15		nsp	nsp	SHEET	FIXED SHEET	501-KMD550-1146	
6-16		nsp	nsp	SPRING	COMECTING SPRING	603-KMD550-199	
6-17		nsp	nsp	WASHER	WASHER(Φ5*3.2*0.25t)	606-H900-052	
6-18		nsp	nsp	WASHER	FIXED CENTER WASHER	606-C426-066	
6-19		nsp	nsp	SHEET	MUTE SHEET	612-KMD510-032	
7		nsp	nsp	CONN. CORD	7P CONN. WIRE ASSY	704-KMD550B-2129	
7-1		00D9580003405	00D9580003405	SW	LEAF SW(LSA-1119H,2PIN)	403-DM11A-020	
7-2		00D9580002105	00D9580002105	SW	LEAF SW(LSA-2127E,3PIN)	403-KMD280-048	
8		nsp	nsp	PULLEY	MOTOR PULLEY	100-KMD280-728	
9		nsp	nsp	ARM	SWITCH CONTROL	100-KMD280-730	
10		00M08CW105090	00M08CW105090	CHASSIS	BOTTOM BASE	100-KMD550-1213A	
11		nsp	nsp	HOLDER	DISK HOLDER	100-4001SM-2642	
12		nsp	nsp	BRACKET	L.FIXED PLATE	300-KMDV280C-263A	
13		nsp	nsp	BRACKET	R.FIXED PLATE	300-KMDV280C-264A	
14		nsp	nsp	BRACKET	STAY R	300-KMD280-265RA	
15		nsp	nsp	BRACKET	STAY L	300-KMD550-265L	

NOTE : "nsp" PART IS LISTED FOR REFERENCE ONLY, MARANTZ WILL NOT SUPPLY THESE PARTS.

POS. NO.	VERS. COLOR	PART NO. (FOR EUR)	PART NO. (MZ)	PART NAME	DESCRIPTION	
16		nsp	nsp	PLATE	SWIVEL PLATE	300-KMD550-466
17		nsp	nsp	BRACKET	MAIN PWB BRACKET	300-390-486A
18		90M-MM001360R	90M-MM001360R	MOTOR	MOTOR(MEN-7E2T5,DC12V)	401-MK7-043A
19		nsp	nsp	LABEL	LASER BEAM LABEL(25*23mm)	501-1033-428
20		nsp	nsp	WASHER	CUSHION(PVC,Φ26.5*16*0.5t,BLACK)	501-DCM280-1628
21		nsp	nsp	ROD	STEEL WIRE	603-KMD280-200
22		00D9410060609	00D9410060609	BELT	MOTOR BELT	604-KMD280-094A
23		nsp	nsp	WASHER	WASHER(HIMILON)	612-KT300-007
24		nsp	nsp	WASHER	WASHER(PC,BLACK,Φ38.5*29.5*0.5t)	612-DCM390-247
25		00M08CW305010	00M08CW305010	MAGNET	MAGNET(Φ30*18*5t,650Gm)	613-MK7-002A
35		nsp	nsp	PWB ASSY	SERVO PWB ASS'Y	704-4003-8506
36		nsp	nsp	PWB ASSY	DSP PWB ASS'Y	704-4003-8509
37	FB	nsp	nsp	PWB ASSY	POWER PWB ASS'Y	704-4003FB-8514
37	/N1B	nsp	nsp	PWB ASSY	POWER PWB ASS'Y	704-4003N1B-8529
37	/U1B	nsp	nsp	PWB ASSY	POWER PWB ASS'Y	704-4003U1B-8530
38		941407002400M	941407002400M	LEG	FOOT(ABS,KURZ AM4736-615AL)	100-4003-2387
39		941418002410M	941418002410M	ESCUTCHEON	CD DOOR	100-4003-2659
40		nsp	nsp	BRACKET	BRACKET TRANSFORMER	300-DV300B-443
41		nsp	nsp	CHASSIS	BUTTOM BASE	300-4003-502C
43	FB	nsp	nsp	PANEL	BACK BOARD	300-4003FB-503B
43	/N1B	nsp	nsp	PANEL	BACK BOARD	300-4003N1B-503B
43	/U1B	nsp	nsp	PANEL	BACK BOARD	300-4003U1B-503B
⚠44	FB	nsp	90M-TS002760R	TRANSF.	# TRANSFORMER FOR F	411-4001-548
⚠44	/N1B	90M-TS002770R	90M-TS002770R	TRANSF.	# TRANSFORMER FOR N	411-4001-547
⚠44	/U1B	nsp	90M-TS002780R	TRANSF.	# TRANSFORMER FOR U	411-4001-546
⚠45		90M-YT004940R	90M-YT004940R	TERMINAL	# INLET CORD JACK (VJJ0911E1)	420-4001-221
51		nsp	nsp	PLATE	SEPARATE PLATE FOR	501-4001-1937
52		nsp	nsp	BUFFER	SILICONE RUBBER	501-4001-1946
57		nsp	nsp	WASHER	WASHER(Φ5.5*3*0.7t)	606-4001-228
59		nsp	nsp	BUFFER	CUSHION(EVA,Φ31.3,t=1)	612-DCM280-215
61		941436002340M	941436002340M	BUFFER	FOOT	612-4001-252
80		90M-FC500090R	90M-FC500090R	FERRITE CORE	CORE(BRI28*13*16)	415-PROTT1-118
81		nsp	nsp	BUFFER	SILICONE RUBBER	501-4001-1953
PACKING						
	FB	nsp	541110307017M	USER GUIDE	USER GUIDE CC4003 F	502-C4003F-2769
	/N1B	541110307031M	541110307031M	USER GUIDE	USER GUIDE CC4003 N	502-C4003N-2770
	/U1B	nsp	541110307024M	USER GUIDE	USER GUIDE CC4003 U	502-C4003U-2827
34		941307002370M	941307002370M	UNIT KIT	REMOTE CONTROL	704-4003-8367
⚠75	FB	nsp	941611002180S	MAINS CORD	# 2P MAINS CORD FOR F	409-4003-193
⚠75	/N1B	90M-ZC000540R	90M-ZC000540R	MAINS CORD	# 2P MAINS CORD FOR N	409-4001-166
⚠75	/U1B	nsp	90M-ZC000550R	MAINS CORD	# 2P MAINS CORD FOR U	409-4001-167
1		00D9580009807	00D9580009807	SCREW	SCREW ASS'Y	701-AVD3500K-1668
NOT STANDARD SPARE PART						
		nsp	531210109000M	PACKING CASE	GIFT BOX	507-4003-2652
		nsp	941533002320M	CUSHION	POLYFOAM L	506-4003-558L
		nsp	941533002330M	CUSHION	POLYFOAM R	506-4003-558R
42		nsp	941403002490M	LID	TOP COVER	300-4003-504B
77		nsp	90M-ZD000570R	CONN. CORD	2P CINCH CORD L=1M AUDIO	408-CDN34A-028
76		nsp	90M-ZD000580R	CONN. CORD	CINCH CORD L=1M ORANGE	408-4001-066

NOTE : "nsp" PART IS LISTED FOR REFERENCE ONLY, MARANTZ WILL NOT SUPPLY THESE PARTS.

13. MICROPROCESSOR AND IC DATA

IC102 : CXD3059AR

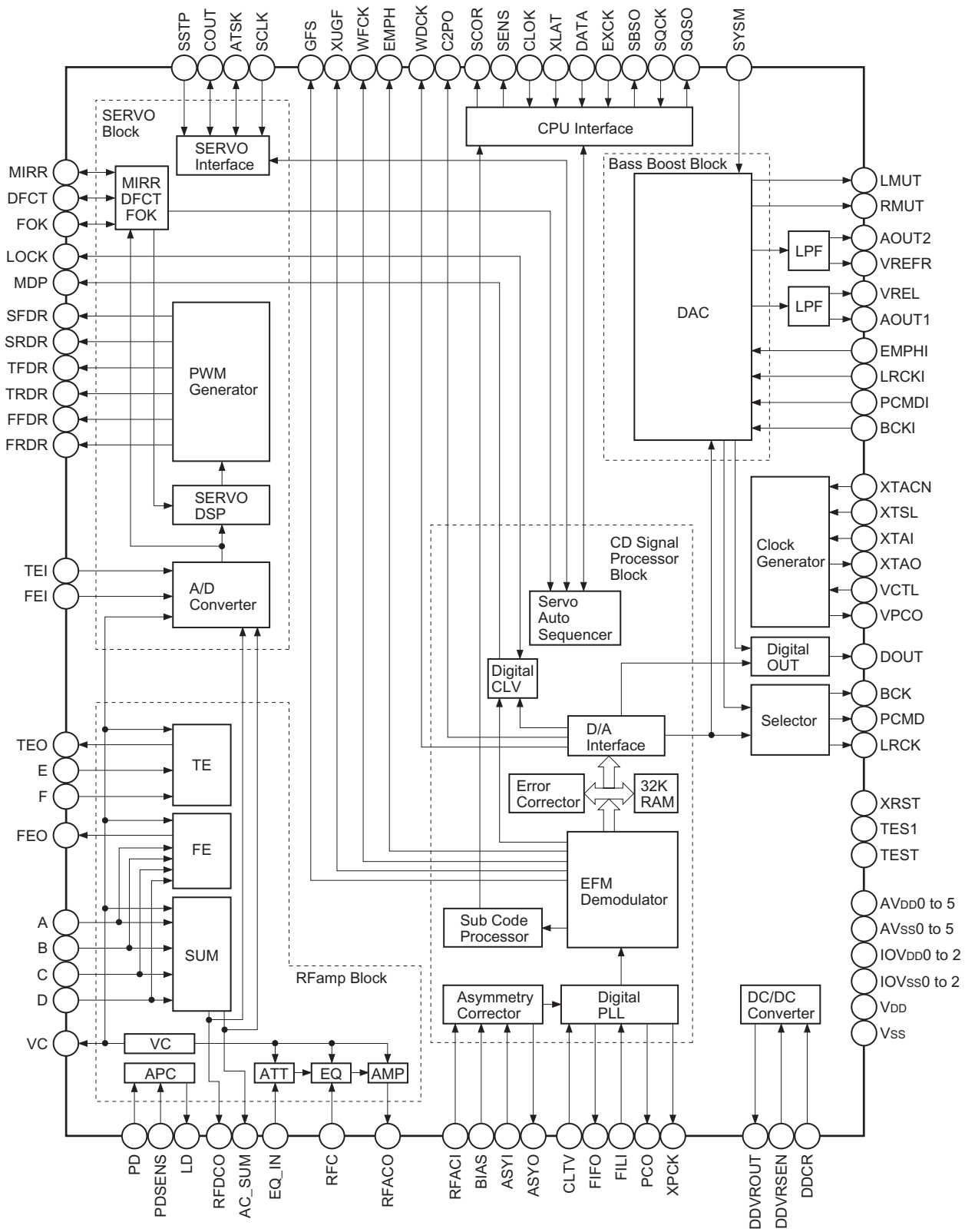

Power supply	Pin No.	Symbol	I/O		Description
Digital I/O = 3.3V Internal = 2.5V	1	MIRR	I/O	1, 0	Mirror signal input/output.
	2	DFCT	I/O	1, 0	Defect signal input/output.
	3	FOK	I/O	1, 0	Focus OK signal input/output.
	4	V_{SS}	—	—	Internal digital GND.
	5	LOCK	I/O	1, 0	GFS is sampled at 460Hz; when GFS is high, this pin outputs a high signal. If GFS is low eight consecutive samples, this pin outputs low. Or this pin inputs when LKIN = "1".
	6	MDP	O	1, Z, 0	Spindle motor servo control output.
	7	SSTP	I		Disk innermost detection signal input.
	8	$IOV_{SS}1$	—	—	I/O digital GND.
	9	SFDR	O	1, 0	Sled drive output.
	10	SRDR	O	1, 0	Sled drive output.
	11	TFDR	O	1, 0	Tracking drive output.
	12	TRDR	O	1, 0	Tracking drive output.
	13	FFDR	O	1, 0	Focus drive output.
	14	FRDR	O	1, 0	Focus drive output.
	15	$IOV_{DD}1$	—	—	I/O digital power supply.
A/D 3.3V	16	$AV_{DD}0$	—	—	Analog power supply.
	17	$AV_{SS}0$	—	—	Analog GND.
—	18	NC	—	—	
RFamp 3.3V	19	E	I		E signal input.
	20	F	I		F signal input.
	21	TEI	I		Tracking error signal input to DSSP block.
	22	TEO	O		Tracking error signal output from RF amplifier block.
	23	FEI	I		Focus error signal input to DSSP block.
	24	FEO	O		Focus error signal output from RF amplifier block.
	25	VC	I/O		Center voltage output from RF amplifier block. Center voltage input to DSSP block by command switch.
	26	A	I		A signal input.
	27	B	I		B signal input.
	28	C	I		C signal input.
	29	D	I		D signal input.
	30	NC	—	—	
	31	$AV_{DD}4$	—	—	Analog power supply.
	32	RFDCO	I/O		RFDC signal output. RFDC signal input to DSSP block by command switch.
	33	PDSENS	I		Reference voltage pin for PD.
	34	AC_SUM	O	Analog	RFAC summing amplifier output.

Power supply	Pin No.	Symbol	I/O		Description
RFamp 3.3V	35	EQ_IN	I		Equalizer circuit input.
	36	LD	O		APC amplifier output.
	37	PD	I		APC amplifier input.
	38	NC	—	—	
	39	RFC	I		Equalizer cut-off frequency adjustment pin.
	40	AVSS4	—	—	Analog GND.
	41	RFACO	O		RFAC signal output.
ASYM 3.3V	42	RFACI	I		RFAC signal input or EFM signal input.
	43	AVDD3	—	—	Analog power supply.
	44	BIAS	I		Asymmetry circuit constant current input.
	45	ASYI	I		Asymmetry comparator voltage input.
	46	ASYO	O	1, 0	EFM full-swing output. (Low = VSS, High = VDD)
	47	VPCO	O	1, Z, 0	Wide-band EFM PLL charge pump output.
	48	VCTL	I		Wide-band EFM PLL VCO2 control voltage input.
	49	AVSS3	—	—	Analog GND.
	50	CLTV	I		Multiplier VCO1 control voltage input.
	51	FILO	O	Analog	Master PLL (slave = digital PLL) filter output.
	52	FILI	I		Master PLL filter input.
	53	PCO	O	1, Z, 0	Master PLL charge pump output.
DC/DC 3.3V	54	AVDD5	—	—	Analog power supply.
	55	DDVROUT	O		DC/DC converter output. Leave open when not using.
	56	DDVRSEN	I		DC/DC converter output voltage monitor pin. Connect to analog power supply when not using.
	57	AVSS5	—	—	Analog GND.
	58	DDCR	I		Test pin. Normally GND.
—	59	NC	—	—	
Digital I/O = 3.3V Internal = 2.5V	60	BCKI	I		D/A interface bit clock input.
	61	PCMDI	I		D/A interface serial data input. (2's COMP, MSB first)
	62	LRCKI	I		D/A interface LR clock input.
	63	LRCK	O	1, 0	D/A interface LR clock output. f = Fs
	64	VSS	—	—	Internal digital GND.
	65	PCMD	O	1, 0	D/A interface serial data output. (2's COMP, MSB first)
	66	BCK	O	1, 0	D/A interface bit clock output.
	67	VDD	—	—	Internal digital power supply.
	68	EMPH	O	1, 0	High when the playback disc has emphasis, low it has not.
	69	EMPHI	I		High when de-emphasis is ON, low when input OFF.

Power supply	Pin No.	Symbol	I/O		Description
Digital I/O = 3.3V Internal = 2.5V	70	$IOV_{DD}2$	—	—	I/O digital power supply.
	71	DOUT	O	1, 0	Digital Out output.
	72	TEST	I		Test pin. Normally GND.
	73	TES1	I		Test pin. Normally GND.
	74	IOVss2	—	—	I/O digital GND.
—	75	NC	—	—	
X'tal 2.5V	76	XV_{SS}	—	—	Master clock GND.
	77	XTAO	O		Crystal oscillation circuit output.
	78	XTAI	I		Crystal oscillation circuit input.
	79	XV_{DD}	—	—	Master clock power supply.
Lch 3.3V	80	$AV_{DD}1$	—	—	Analog power supply.
	81	AOUT1	O		Lch analog output.
	82	VREFL	O		Lch reference voltage.
	83	$AV_{SS}1$	—	—	Analog GND.
Rch 3.3V	84	$AV_{SS}2$	—	—	Analog GND.
	85	VREFR	O		Rch reference voltage.
	86	AOUT2	O		Rch analog output.
	87	$AV_{DD}2$	—	—	Analog power supply.
—	88	NC	—	—	
Digital I/O = 3.3V Internal = 2.5V	89	$IOV_{DD}0$	—	—	I/O digital power supply.
	90	RMUT	O	1, 0	Rch "0" detection flag.
	91	LMUT	O	1, 0	Lch "0" detection flag.
	92	NC	—	—	
	93	XTSL	I		Crystal selection input. Low when the crystal is 16.9344MHz; high when the crystal is 33.8688MHz.
	94	$IOV_{SS}0$	—	—	I/O digital GND.
	95	XTACN	I		Oscillation circuit control. Self-oscillation when high, oscillation stop when low.
	96	SQSO	O	1, 0	Subcode Q 80-bit and PCM peak and level data output. CD TEXT data output.
	97	SQCK	I		SQSO readout clock input.
	98	SBSO	O	1, 0	Subcode P to W serial output.
	99	EXCK	I		SBSO readout clock input.
	100	XRST	I		System reset. Reset when low.
	101	SYSM	I		Mute input. Muted when high.
	102	DATA	I		Serial data input from CPU.
	103	V_{SS}	—	—	Internal digital GND.
	104	XLAT	I		Latch input from CPU. The serial data is latched at the falling edge.

Power supply	Pin No.	Symbol	I/O		Description
Digital I/O = 3.3V Internal = 2.5V	105	CLOK	I		Serial data transfer clock input from CPU.
	106	VDD	—	—	Internal digital power supply.
	107	SENS	O	1, 0	SENS output to CPU.
	108	SCLK	I		SENS serial data readout clock input.
	109	ATSK	I/O	1, 0	Anti-shock input/output.
	110	WFCK	O	1, 0	WFCK output.
	111	XUGF	O	1, 0	XUGF output. Output MNT0, RFCK, SOUT by command switch.
	112	XPCK	O	1, 0	XPCK output. Output MNT1, SOCK by command switch.
	113	GFS	O	1, 0	GFS output. Output MNT2, XROF, XOLT by command switch.
	114	C2PO	O	1, 0	C2PO output. Output MNT3, GTOP by command switch.
	115	SCOR	O	1, 0	High output when the subcode sync, S0 or S1, is detected.
	116	VDD	—	—	Internal digital power supply.
	117	C4M	O	1, 0	4.2336MHz output. 1/4 frequency-division output of the V16M in CAV-W mode and variable pitch mode.
	118	WDCK	O	1, 0	Word clock output. f = 2Fs. GRSCOR output by command switch.
	119	COUT	I/O	1, 0	Track number count signal input/output.
	120	NC	—	—	

IC104 : SP232ACP

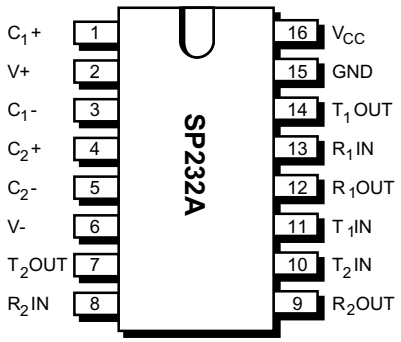

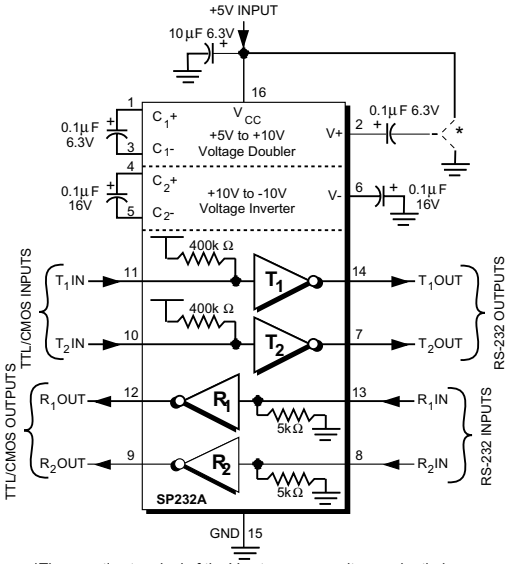

*The negative terminal of the V+ storage capacitor can be tied to either V_{CC} or GND. Connecting the capacitor to V_{CC} (+5V) is recommended.

IC105 : BA6392FPE2

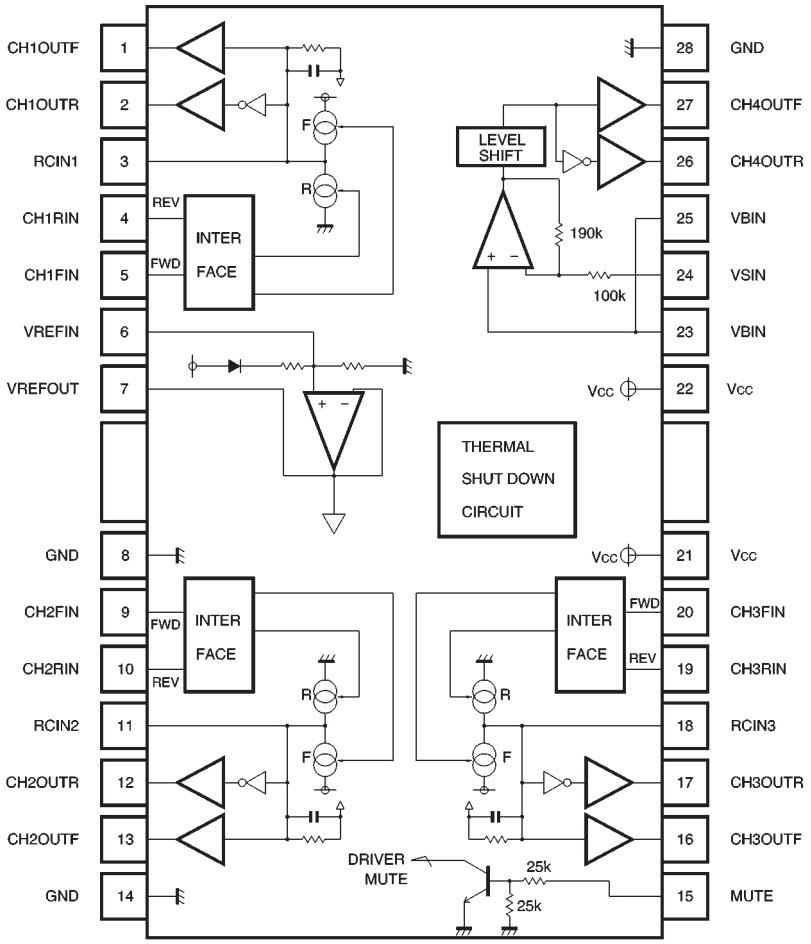

Pin No.	Pin name	Function
1	CH1OUT F	Driver channel 1 forward output
2	CH1OUT R	Driver channel 1 reverse output
3	RC IN1	Connect to attached resistor/capacitor (1)
4	CH1 RIN	Driver channel 1 reverse input
5	CH1 FIN	Driver channel 1 forward input
6	VREF IN	Internal reference amplifier input
7	VREF OUT	Internal reference amplifier output
8	GND	Ground for internal reference and internal power circuit
9	CH2 FIN	Driver channel 2 forward input
10	CH2 RIN	Driver channel 2 reverse input
11	RC IN2	Connect to attached resistor/capacitor (2)
12	CH2OUT R	Driver channel 2 reverse output
13	CH2OUT F	Driver channel 2 forward output
14	GND	Ground
15	MUTE	Driver mute control input
16	CH3OUT F	Driver channel 3 forward output
17	CH3OUT R	Driver channel 3 reverse output
18	RC IN3	Connect to attached resistor/capacitor (3)
19	CH3 RIN	Driver channel 3 reverse input
20	CH3 FIN	Driver channel 3 forward input
21	Vcc	Power supply
22	Vcc	Power supply
23	VBIN	Driver channel 4 bias input*
24	VSIN	Driver channel 4 input
25	VBIN	Driver channel 4 bias input*
26	CH4OUT R	Driver channel 4 reverse output
27	CH4OUT F	Driver channel 4 forward output
28	GND	Ground

* Pin 23 and pin 25 are shorted internally.

IC112 : CS4392

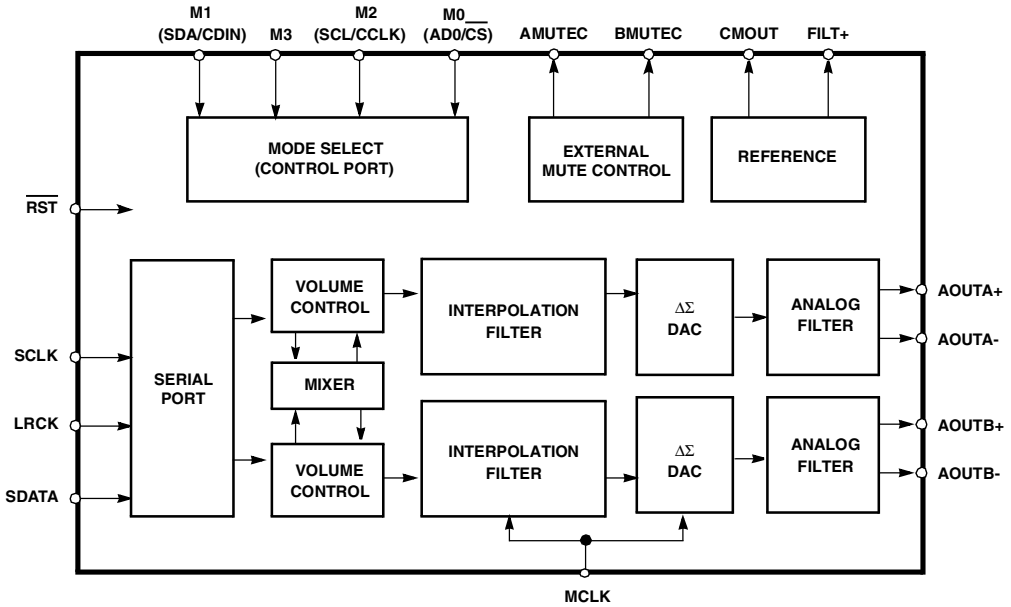

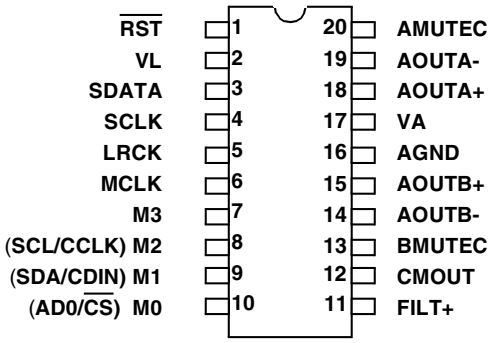

RST	1	**Reset** (*Input*) - Powers down device and resets all internal registers to their default settings.
VL	2	**Logic Power** (*Input*) **-** Positive power for the digital input/output.
SDATA	3	**Serial Audio Data** (*Input*) - Input for two's complement serial audio data.
SCLK	4	**Serial Clock** (*Input/Output*) - Serial clock for the serial audio interface.
LRCK	5	**Left Right Clock** (*Input/Output*) - Determines which channel, Left or Right, is currently active on the serial audio data line.
MCLK	6	**Master Clock** (*Input*) - Clock source for the delta-sigma modulator and digital filters.
FILT+	11	**Positive Voltage Reference** (*Output*) **-** Positive reference voltage for the internal sampling circuits.
CMOUT	12	**Common Mode Voltage** (*Output*) - Filter connection for internal quiescent voltage.
AMUTEC **BMUTEC**	20 13	**Mute Control** (*Output*) - The Mute Control pin goes high during power-up initialization, reset, muting, power-down or if the master clock to left/right clock frequency ratio is incorrect.
AOUTB- **AOUTB+** **AOUTA+** **AOUTA**	14 15 18 19	**Differential Analog Output** (*Outputs*) - The full scale differential analog output level is specified in the Analog Characteristics specification table.
AGND	16	**Ground** (*Input*)
VA	17	**Analog Power** (*Input*) **-** Positive power for the analog section.
Control Port Mode Definitions		
M3	7	**Mode Selection** (*Input*) - This pins should be tied to GND level during control port mode.
SCL/CCLK	8	**Serial Control Port Clock** (*Input*) - Serial clock for the serial control port.
SDA/CDIN	9	**Serial Control Data** (*Input/Output*) - SDA is a data I/O line in I^2C mode. CDIN is the input data line for the control port interface in SPI mode.
AD0/$\overline{CS}$	10	**Address Bit 0 (I^2C) / Control Port Chip Select (SPI)** (*Input/Output*) - AD0 is a chip address pin in I^2C mode; $\overline{CS}$ is the chip select signal for SPI format.
Stand-Alone Mode Definitions		
M3 **M2** **M1** **M0**	7 8 9 10	**Mode Selection** (*Input*) - Determines the operational mode of the device.

IC110 : SM8952AC25J

Pin No.	Name	Input/ Output	pull-up/ down	
1	NC		NC	
2	P1.0	O	NC	
3	P1.1	O	NC	
4	P1.2	O	NC	
5	RSEL	I	pull-up	EXTERNAL/ INTERNAL SELECT
6	PLAY KEY	I	pull-up	PLAY KEY
7	O/C KEY	I	pull-up	OPEN/CLOSE KEY
8	P1.6	O	NC	
9	AMUTE	O	pull-up	AUDIO MUTE
10	RES	I		
11	RXD	I	pull-up	RS232 RXD
12	NC		NC	
13	TXD	O	pull-up	RS232 TXD
14	PWR KEY	I	pull-up	POWER KEY
15	REMOTE	I	pull-up	REMOTE
16	/DACRST	O	pull-up	DAC RESET
17	/PWRC	O	pull-up	POWER CONTROL
18	P3.6	O	NC	
19	SRST	O	pull-up	SYSTEM RESET
20	XTAL2	O		
21	XTAL1	I		
22	VSS			

Pin No.	Name	Input/ Output	pull-up/ down	
23	NC		NC	
24	P2.0	O	NC	
25	P2.1	O	NC	
26	P2.2	O	NC	
27	P2.3	O	NC	
28	P2.4	O	NC	
29	DDA	I/O	pull-up	DSA-interface DATA
30	DST	I/O	pull-up	DSA-interface STB
31	DAK	I/O	pull-up	DSA-interface ACK
32	#PSEN	O		
33	ALE	O		
34	NC		NC	
35	#EA	I		
36	P0.7	O	NC	
37	P0.6	O	NC	
38	P0.5	O	NC	
39	P0.4	O	NC	
40	P0.3	O	NC	
41	P0.2	O	NC	
42	P0.1	O	NC	
43	P0.0	O	NC	
44	VDD			

IC201 : MCF5249LPV120

NUMBER	NAME	TYPE	DESCRIPTION
1	SCL/QSPI_CLK	i/o	QSPI clock pin function
2	CS0	o	static chip select 0
3	A21	o	SDRAM address / static adr
4	A11	o	SDRAM address / static adr
5	A10	o	SDRAM address / static adr
6	A9	o	SDRAM address / static adr
7	A18	o	SDRAM address / static adr
8	A17	o	SDRAM address / static adr
9	BCLK/GPIO10	i/o	sdram clock output
10	SCLK_OUT/GPIO15	i/o	MemoryStick/SD
11	BCLKE	o	sdram clock enable output
12	SDA/QSPI_DIN	i/o	QSPI data in
13	DATA24	i/o	data
14	A22	o	SDRAM address / static adr
15	SDUDQM	o	SDRAM UDQM
16	EF/GPIO19	i/o	error flag input
17	DATA25	i/o	data
18	DATA26	i/o	data
19	DATA27	i/o	data
20	PAD-GND		PAD-GND
21	DATA28	i/o	data
22	DATA29	i/o	data
23	SDATA3/GPIO56	i/o	SD interface data line
24	DATA30	i/o	data
25	BUFENB1/GPIO57	i/o	external buffer 1 enable
26	DATA31	i/o	data
27	CORE-VDD		CORE-VDD
28	A13	o	SDRAM address / static adr
29	CORE-GND		CORE-GND
30	A23	o	SDRAM address / static adr
31	A14	o	SDRAM address / static adr
32	A15	o	SDRAM address / static adr
33	A16	o	SDRAM address / static adr
34	PAD-VDD		PAD-VDD
35	A19	o	SDRAM address / static adr
36	A20	o	SDRAM address / static adr
37	TEST2	i	test
38	SDRAM_CS1	o	SDRAM chip select out 1
39	SDATA1_BS1/GPIO9	i/o	Memory Stick / SD
40	SDRAS	o	SDRAM RAS
41	SDCAS	o	SDRAM CAS
42	SDWE	o	SDRAM write enable
43	SDLDQM	o	SDRAM LDQM
44	GPIO5	i/o	GPIO5
45	QSPI_CS0/GPIO29	i/o	QSPI chip select 0
46	QSPI_DOUT/GPIO26	i/o	QSPI data out
47	GPIO6	i/o	GPIO6
48	DATA21	i/o	data
49	DATA19	i/o	data
50	QSPI_CS2/GPIO21	i/o	QSPI chip select 2
51	DATA20	i/o	data
52	DATA22	i/o	data
53	DATA18	i/o	data
54	DATA23	i/o	data
55	DATA17	i/o	data
56	PAD-VDD		PAD-VDD
57	DATA16	i/o	data
58	CFLG/GPIO18	i/o	CFLG input
59	EBUOUT1/GPO36	o	audio interfaces EBU out 1
60	CORE-GND		CORE-GND
61	EBUIN3/ADIN0/GPI38	i	audio interfaces EBU in 3 / AD convertor input0
62	EBUIN2/GPI37	i	audio interfaces EBU in 2
63	CORE-VDD		CORE-VDD
64	SCL2/GPIO3	i/o	IIS2 clock line
65	RSTI	i	Reset
66	TOUT1/ADOUT/GPO35	o	timer output 1 / AD output
67	LRCK2/GPIO44	o	audio interfaces EBU out 1
68	OE	o	Output Enable
69	SDA2/GPIO55	i/o	IIS2 data
70	SDATAO2/GPO41	o	audio interfaces serial data output 2
71	SCLK2/GPIO48	i/o	audio interfaces serial clock 2
72	PAD-GND		PAD-GND

NUMBER	NAME	TYPE	DESCRIPTION
73	TEST3	i	test
74	SDATAO1/GPIO25	i/o	audio interfaces serial data output 1
75	LRCK1	i/o	audio interfaces word clock 1
76	LRCK4/GPIO46	i/o	audio interfaces word clock 4
77	SDATAI4/GPI42	i	audio interfaces serial data in 4
78	SCLK1	i/o	audio interfaces serial clock 1
79	SCLK4/GPIO50	i/o	audio interfaces serial clock 4
80	TA/GPIO20	i/o	Transfer acknowledge
81	SDATAI1	i	audio interfaces serial data in 1
82	EBUIN1/GPI36	i	audio interfaces EBU in 1
83	PLLGRDVDD		PLLGRDVDD
84	PLLGRDGND		PLLGRDGND
85	PLLPADGND		PLLPADGND
86	PLLPADVDD		PLLPADVDD
87	PLLCOREGND		PLLCOREGND
88	PLLCOREVDD		PLLCOREVDD
89	IDE-DIOW/GPIO14	i/o	ide diow
90	CRIN	i	crystal
91	IDE-DIOR/GPIO13	i/o	ide dior
92	IDE-IORDY/GPIO16	i/o	ide iordy
93	MCLK1/GPO39	o	Audio master clock output 1
94	MCLK2/GPO42	o	Audio master clock output 2
95	XTRIM/GPO38	o	audio interfaces X-tal trim
96	TRST/DSCLK	i	JTAG/Debug
97	CORE-VDD		CORE-VDD
98	RW_B	o	Bus write enable
99	TMS/BKPT	i	JTAG/debug
100	CORE-GND		CORE-GND
101	TCK	i	JTAG
102	PAD-GND		PAD-GND
103	PST3/GPIO62	i/o	debug
104	CNPSTCLK/GPO63	o	debug
105	PST1/GPIO60	i/o	debug
106	PAD-VDD		PAD-VDD
107	PST2/GPIO61	i/o	debug
108	PST0/GPIO59	i/o	debug
109	TDI/DSI	i	jtag/debug
110	TEST0	i	test
111	TIN0/GPI33	i	timer input 0
112	HI-Z	i	jtag
113	DDATA3/GPIO4	i/o	debug
114	TOUT0/GPO33	o	timer output 0
115	DDATA1/GPIO1	i/o	debug
116	DDATA2/GPIO2	i/o	debug
117	CTS2_B/ADIN3/GPI31	i	second UART clear to send / AD input 3
118	DDATA0/GPIO0	i/o	debug
119	RXD2/GPI28/ADIN2	i	second UART receive data input / AD input 2
120	TDSO	o	JTAG/debug
121	RTS2_B/GPO31	o	second UART request to send
122	SDATAI3/GPI41	i	audio interfaces serial data input 3
123	CTS1_B/GPI30	i	first UART clear to send
124	TXD2/GPO28	o	second UART transmit data output
125	RTS1_B/GPO30	o	first UART request to send
126	EBUIN4/ADIN1/GPI39	i	audio interfaces EBU input 4 / AD input 1
127	TXD1/GPO27	o	first UART transmit data output
128	RXD1/GPI27	i	first UART receive data input
129	CS1/GPIO58	i/o	chip select 1
130	CORE-GND		CORE-GND
131	A1	o	SDRAM address / static adr
132	TIN1/GPIO23	i/o	Timer input 1
133	A2	o	address
134	A3	o	address
135	PAD-GND		PAD-GND
136	A4	o	address
137	A6	o	address
138	A5	o	address
139	A8	o	address
140	A7	o	address
141	CORE-VDD		CORE-VDD
142	A12	o	address
143	TEST1	i	test
144	PAD-VDD		PAD-VDD

14. ELECTRICAL PARTS LIST

PARTS INFORMATION

RESISTORS

1) 00MGD05 × × × 140, Carbon film fixed resistor, ±5% 1/4W
2) 00MGD05 × × × 160, Carbon film fixed resistor, ±5% 1/6W

① ——— Resistance value

Examples ;

① Resistance value

0.1Ω 001	10Ω 100	1kΩ 102	100kΩ 104
0.5Ω 005	18Ω 180	2.7kΩ 272	680kΩ 684
1Ω 010	100Ω 101	10kΩ 103	1MΩ 105
6.8Ω 068	390Ω 391	22kΩ 223	4.7MΩ 475

Note : Please distinguish 1/4W from 1/6W by the shape of parts used actually.

CAPACITORS

CERAMIC CAP.

3) 00MDD1 × × × × 370, Ceramic capacitor
Disc type
Temp.coeff.P350 ～ N1000, 50V

② ③
③ — Capacity value
② — Tolerance

Examples ;

② Tolerance (Capacity deviation)
±0.25pF.....0
±0.5pF.....1
±5%.....5

✻ Tolerance of COMMON PARTS handled here are as follows :
0.5pF ～ 5pF .... ±0.25pF
6pF ～ 10pF .... ±0.5pF
12pF ～ 560pF .... ±5%

③ Capacity value

0.5pF 005	3pF 030	100pF 101
1pF 010	10pF 100	220pF 221
1.5pF 015	47pF 470	560pF 561

CERAMIC CAP.

4) 00MDK16 × × × 300, High dielectric constant ceramic capacitor
Disc type
Temp.chara. 2B4, 50V

④ — Capacity value

Examples ;

④ Capacity value

100pF 101	1000pF 102	10000pF 103
470pF 471	2200pF 222	

ELECTROLY CAP. (⧺)

5) 00MEA × × × × × × 10, Electrolytic capacitor
One-way lead type, Tolerance ±20%

⑥ — Working voltage
⑤ — Capacity value

Examples ;

⑤ Capacity value

0.1μF 104	4.7μF 475	100μF ... 107
0.33μF 334	10μF 106	330μF ... 337
1μF 105	22μF 226	1100μF ... 118
		2200μF ... 228

⑥ Working voltage

6.3V 006	25V 025
10V 010	35V 035
16V 016	50V 050

FILM CAP. (⧻)

6) 00MDF15 × × × 350
00MDF15 × × × 310 → Plastic film capacitor
One-way type, Mylar ±5% 50V
00MDF16 × × × 310 → Plastic film capacitor
One-way type, Mylar ±10% 50V

⑦ — Capacity value

Examples ;

⑦ Capacity value

0.001μF (1000pF) 102	0.1μF 104
0.0018μF 182	0.56μF 564
0.01μF 103	1μF 105
0.015μF 153	

NOTE ON SAFETY FOR FUSIBLE RESISTOR :

The suppliers and their type numbers of fusible resistors are as follows;

1. KOA Corporation

Part No. (MJI)	Type No. (KOA)	Description
00MNH05 × × × 140 →	RF25S × × × × ΩJ	(±5% 1/4W)
00MNH05 × × × 120 →	RF50S × × × × ΩJ	(±5% 1/2W)
00MNH85 × × × 110 →	RF73B2A × × × × ΩJ	(±5% 1/10W)
00MNH95 × × × 140 →	RF73B2E × × × × ΩJ	(±5% 1/4W)

✻ Resistance value — Resistance value (0.1 – 10kΩ)

2. Matsushita Electronic Components Co., Ltd

Part No. (MJI)	Type No. (MEC)	Description
00MNF05 × × × 140 →	ERD-2FCJ × × ×	(±5% 1/4W)
00MRF05 × × × 140		
00MNF02 × × × 140 →	ERD-2FCG × × ×	(±2% 1/4W)
00MRF02 × × × 140		

✻ Resistance value — ✻ Resistance value

Examples ;

✻ Resistance value

0.1Ω 001	10Ω 100	1kΩ 102	100kΩ 104
0.5Ω 005	18Ω 180	2.7kΩ 272	680kΩ 684
1Ω 010	100Ω 101	10kΩ 103	1MΩ 105
6.8Ω 068	390Ω 391	22kΩ 223	4.7MΩ 475

ABBREVIATION AND MARKS

ANT.	: ANTENNA	BATT.	: BATTERY
CAP.	: CAPACITOR	CER.	: CERAMIC
CONN.	: CONNECTING	DIG.	: DIGITAL
HP	: HEADPHONE	MIC.	: MICROPHONE
μ-PRO	: MICROPROCESSOR	REC.	: RECORDING
RES.	: RESISTOR	SPK	: SPEAKER
SW	: SWITCH	TRANSF.	: TRANSFORMER
TRIM.	: TRIMMING	TRS.	: TRAMSISTOR
VAR.	: VARIABLE	X'TAL	: CRYSTAL

NOTE ON FUSE :

Regarding to all parts of parts code **00MFS20xxx2xx,** replace only with Wickmann-Werke GmbH, Type 372 non glass type fuse.

NOTE ON SAFETY :

Symbol ⚠ Fire or electrical shock hazard. Only original parts should be used to replaced any part marked with symbol ⚠. Any other component substitution (other than original type), may increase risk of fire or electrical shock hazard.

安全上の注意：

⚠がついている部品は、安全上重要な部品です。必ず指定されている部品番号の部品を使用して下さい。

P.C.B. NAME	POS. NO.	VERS. COLOR	PART NO. (FOR EUR)	PART NO. (MZ)	PART NAME	DESCRIPTION	
					SERVO PWB ASSY		
SERVO	C101		nsp	00MDK98104300	CER. CAP.	CHIP (0.1UF/50V,Z TYPE,Y5V)	413-DCM280-773
SERVO	C102		nsp	00MEJ10701010	ELECT CAP.	100UF/10V,M,5*7,MINI	413-HMA2200-5017
SERVO	C103		nsp	00MEJ10701010	ELECT CAP.	100UF/10V,M,5*7,MINI	413-HMA2200-5017
SERVO	C104		nsp	00MDK98104300	CER. CAP.	CHIP (0.1UF/50V,Z TYPE,Y5V)	413-DCM280-773
SERVO	C105		nsp	00MEJ10701010	ELECT CAP.	100UF/10V,M,5*7,MINI	413-HMA2200-5017
SERVO	C107		00D9587056400	00D9587056400	ELECT CAP.	22UF/16V,M,4*7,MINI	413-SPPW3-236
SERVO	C108		nsp	00MDK98104300	CER. CAP.	CHIP (0.1UF/50V,Z TYPE,Y5V)	413-DCM280-773
SERVO	C109		nsp	00MDK98104300	CER. CAP.	CHIP (0.1UF/50V,Z TYPE,Y5V)	413-DCM280-773
SERVO	C110		nsp	00MDK98104300	CER. CAP.	CHIP (0.1UF/50V,Z TYPE,Y5V)	413-DCM280-773
SERVO	C111		nsp	nsp	CER. CAP.	CERAMIC (0.1UF/50V,Z,Y5V)	413-3113-035
SERVO	C112		00D9587056400	00D9587056400	ELECT CAP.	22UF/16V,M,4*7,MINI	413-SPPW3-236
SERVO	C113		nsp	00MDK98104300	CER. CAP.	CHIP (0.1UF/50V,Z TYPE,Y5V)	413-DCM280-773
SERVO	C114		nsp	nsp	CER. CAP.	CHIP (680PF/50V,J,TYPE,NPO)	413-007USB-785
SERVO	C115		nsp	00MDD95101300	CER. CAP.	CHIP (100PF/50V,J TYPE,NPO)	413-DCM280-767
SERVO	C116		nsp	00MDK96103300	CER. CAP.	CHIP (0.01UF/50V,K TYPE,X7R)	413-DCM280-771
SERVO	C117		nsp	00MDK98104300	CER. CAP.	CHIP (0.1UF/50V,Z TYPE,Y5V)	413-DCM280-773
SERVO	C118		nsp	00MDK96102300	CER. CAP.	CHIP (1000PF/50V,K TYPE,X7R)	413-DCM280-768
SERVO	C119		nsp	nsp	CER. CAP.	CHIP (1500PF/50V,K,TYPE,X7R)	413-DCM280-769
SERVO	C120		nsp	00MDK98104300	CER. CAP.	CHIP (0.1UF/50V,Z TYPE,Y5V)	413-DCM280-773
SERVO	C121		nsp	00MDK98104300	CER. CAP.	CHIP (0.1UF/50V,Z TYPE,Y5V)	413-DCM280-773
SERVO	C122		00D9587056400	00D9587056400	ELECT CAP.	22UF/16V,M,4*7,MINI	413-SPPW3-236
SERVO	C123		nsp	00MDK98104300	CER. CAP.	CHIP (0.1UF/50V,Z TYPE,Y5V)	413-DCM280-773
SERVO	C124		nsp	00MEJ10505010	ELECT CAP.	1UF/50V,M,4*7,MINI	413-SPPW3-234
SERVO	C125		nsp	00MDK98104300	CER. CAP.	CHIP (0.1UF/50V,Z TYPE,Y5V)	413-DCM280-773
SERVO	C126		nsp	00MDK98104300	CER. CAP.	CHIP (0.1UF/50V,Z TYPE,Y5V)	413-DCM280-773
SERVO	C127		nsp	00MDK98104300	CER. CAP.	CHIP (0.1UF/50V,Z TYPE,Y5V)	413-DCM280-773
SERVO	C128		nsp	00MEJ47601610	ELECT CAP.	47UF/16V,M,5*7,SS	413-CDVD2001-265
SERVO	C130		nsp	00MDK98104300	CER. CAP.	CHIP (0.1UF/50V,Z TYPE,Y5V)	413-DCM280-773
SERVO	C131		nsp	00MEJ10602510	ELECT CAP.	10UF/25V,M,4*7,MINI	413-SPPW3-235
SERVO	C132		nsp	00MEJ10602510	ELECT CAP.	10UF/25V,M,4*7,MINI	413-SPPW3-235
SERVO	C133		nsp	00MDK98104300	CER. CAP.	CHIP (0.1UF/50V,Z TYPE,Y5V)	413-DCM280-773
SERVO	C134		nsp	00MDK98104300	CER. CAP.	CHIP (0.1UF/50V,Z TYPE,Y5V)	413-DCM280-773
SERVO	C135		nsp	nsp	CER. CAP.	CERAMIC (0.1UF/50V,Z,Y5V)	413-3113-035
SERVO	C136		nsp	00MDK98104300	CER. CAP.	CHIP (0.1UF/50V,Z TYPE,Y5V)	413-DCM280-773
SERVO	C137		nsp	00MDK98104300	CER. CAP.	CHIP (0.1UF/50V,Z TYPE,Y5V)	413-DCM280-773
SERVO	C138		nsp	00MDK98104300	CER. CAP.	CHIP (0.1UF/50V,Z TYPE,Y5V)	413-DCM280-773
SERVO	C139		00D9587056400	00D9587056400	ELECT CAP.	22UF/16V,M,4*7,MINI	413-SPPW3-236
SERVO	C140		nsp	00MDD95221300	CER. CAP.	CHIP (220PF/50V,TYPE NPO)	413-007USB-787
SERVO	C141		nsp	00MDK98104300	CER. CAP.	CHIP (0.1UF/50V,Z TYPE,Y5V)	413-DCM280-773
SERVO	C143		nsp	00MDK98104300	CER. CAP.	CHIP (0.1UF/50V,Z TYPE,Y5V)	413-DCM280-773
SERVO	C144		nsp	nsp	CER. CAP.	CHIP (0.022UF/50V,K,TYPE,X7R)	413-DCM280-794
SERVO	C148		nsp	00MEJ10701010	ELECT CAP.	100UF/10V,M,5*7,MINI	413-HMA2200-5017
SERVO	C149		nsp	00MEJ47601610	ELECT CAP.	47UF/16V,M,5*7,SS	413-CDVD2001-265
SERVO	C150		nsp	00MDK96103300	CER. CAP.	CHIP (0.01UF/50V,K TYPE,X7R)	413-DCM280-771
SERVO	C151		nsp	00MDK96103300	CER. CAP.	CHIP (0.01UF/50V,K TYPE,X7R)	413-DCM280-771
SERVO	C152		nsp	00MDK96103300	CER. CAP.	CHIP (0.01UF/50V,K TYPE,X7R)	413-DCM280-771
SERVO	C153		nsp	00MDK96103300	CER. CAP.	CHIP (0.01UF/50V,K TYPE,X7R)	413-DCM280-771
SERVO	C154		nsp	00MDK96103300	CER. CAP.	CHIP (0.01UF/50V,K TYPE,X7R)	413-DCM280-771
SERVO	C154		nsp	00MDK96103300	CER. CAP.	CHIP (0.01UF/50V,K TYPE,X7R)	413-DCM280-771
SERVO	C155		nsp	00MEJ10505010	ELECT CAP.	1UF/50V,M,4*7,MINI	413-SPPW3-234
SERVO	C156		nsp	00MDK98104300	CER. CAP.	CHIP (0.1UF/50V,Z TYPE,Y5V)	413-DCM280-773
SERVO	C157		nsp	00MEJ10505010	ELECT CAP.	1UF/50V,M,4*7,MINI	413-SPPW3-234
SERVO	C158		nsp	00MEJ10505010	ELECT CAP.	1UF/50V,M,4*7,MINI	413-SPPW3-234
SERVO	C159		nsp	00MEJ10505010	ELECT CAP.	1UF/50V,M,4*7,MINI	413-SPPW3-234
SERVO	C160		nsp	00MEJ10505010	ELECT CAP.	1UF/50V,M,4*7,MINI	413-SPPW3-234
SERVO	C161		00MEJ22505010	00MEJ22505010	ELECT CAP.	2.2UF/50V,M,4*7,MINI	413-DV300-5156
SERVO	C163		nsp	nsp	CER. CAP.	CHIP (33PF/50V,J,TYPE,NPO)	413-900-926
SERVO	C164		nsp	nsp	CER. CAP.	CHIP (33PF/50V,J,TYPE,NPO)	413-900-926
SERVO	C165		nsp	00MEJ10602510	ELECT CAP.	10UF/25V,M,4*7,MINI	413-SPPW3-235
SERVO	C166		nsp	00MDK98104300	CER. CAP.	CHIP (0.1UF/50V,Z TYPE,Y5V)	413-DCM280-773
SERVO	C167		nsp	nsp	CER. CAP.	CERAMIC (0.1UF/50V,Z,Y5V)	413-3113-035
SERVO	C168		nsp	00MDK98104300	CER. CAP.	CHIP (0.1UF/50V,Z TYPE,Y5V)	413-DCM280-773
SERVO	C170		nsp	00MDD95470300	CER. CAP.	CHIP (47PF/50V,J TYPE,NPO)	413-007USB-784
SERVO	C171		nsp	00MDK96103300	CER. CAP.	CHIP (0.01UF/50V,K TYPE,X7R)	413-DCM280-771
SERVO	C172		nsp	00MDK98104300	CER. CAP.	CHIP (0.1UF/50V,Z TYPE,Y5V)	413-DCM280-773

NOTE : "nsp" PART IS LISTED FOR REFERENCE ONLY, MARANTZ WILL NOT SUPPLY THESE PARTS.

P.C.B. NAME	POS. NO.	VERS. COLOR	PART NO. (FOR EUR)	PART NO. (MZ)	PART NAME	DESCRIPTION	
SERVO	C173		nsp	00MDK98104300	CER. CAP.	CHIP (0.1UF/50V,Z TYPE,Y5V)	413-DCM280-773
SERVO	C174		nsp	00MDK96102300	CER. CAP.	CHIP (1000PF/50V,K TYPE,X7R)	413-DCM280-768
SERVO	C175		nsp	00MEJ10701010	ELECT CAP.	100UF/10V,M,5*7,MINI	413-HMA2200-5017
SERVO	C176		nsp	00MEJ22701010	ELECT CAP.	220UF/10V,M,6*7,MINI	413-HT801K-192
SERVO	C177		nsp	00MEJ10701010	ELECT CAP.	100UF/10V,M,5*7,MINI	413-HMA2200-5017
SERVO	C178		nsp	00MDK98104300	CER. CAP.	CHIP (0.1UF/50V,Z TYPE,Y5V)	413-DCM280-773
SERVO	C179		nsp	00MDK98104300	CER. CAP.	CHIP (0.1UF/50V,Z TYPE,Y5V)	413-DCM280-773
SERVO	C180		nsp	00MDK98104300	CER. CAP.	CHIP (0.1UF/50V,Z TYPE,Y5V)	413-DCM280-773
SERVO	C182		nsp	00MDD95221300	CER. CAP.	CHIP (220PF/50V,TYPE NPO)	413-007USB-787
SERVO	C185		nsp	00MDK98104300	CER. CAP.	CHIP (0.1UF/50V,Z TYPE,Y5V)	413-DCM280-773
SERVO	C196		nsp	nsp	CER. CAP.	CHIP (0.33UF/16V,Z,TYPE,Y5V)	413-007USB-782
SERVO	C197		nsp	00MDK98104300	CER. CAP.	CHIP (0.1UF/50V,Z TYPE,Y5V)	413-DCM280-773
SERVO	C198		nsp	00MDD95200300	CER. CAP.	CHIP (20PF/50V,J TYPE,NPO)	413-DCM280-764
SERVO	C199		nsp	00MDD95200300	CER. CAP.	CHIP (20PF/50V,J TYPE,NPO)	413-DCM280-764
SERVO	C215		nsp	00MDK96103300	CER. CAP.	CHIP (0.01UF/50V,K TYPE,X7R)	413-DCM280-771
SERVO	C240		nsp	00MDK98104300	CER. CAP.	CHIP (0.1UF/50V,Z TYPE,Y5V)	413-DCM280-773
SERVO	C241		nsp	00MDK96103300	CER. CAP.	CHIP (0.01UF/50V,K TYPE,X7R)	413-DCM280-771
SERVO	C242		nsp	00MDD95101300	CER. CAP.	CHIP (100PF/50V,J TYPE,NPO)	413-DCM280-767
SERVO	C243		nsp	00MDD95221300	CER. CAP.	CHIP (220PF/50V,TYPE NPO)	413-007USB-787
SERVO	C244		nsp	00MDK98104300	CER. CAP.	CHIP (0.1UF/50V,Z TYPE,Y5V)	413-DCM280-773
SERVO	C245		nsp	00MDK98104300	CER. CAP.	CHIP (0.1UF/50V,Z TYPE,Y5V)	413-DCM280-773
SERVO	C246		nsp	00MEJ10701010	ELECT CAP.	100UF/10V,M,5*7,MINI	413-HMA2200-5017
SERVO	C247		nsp	00MDK98104300	CER. CAP.	CHIP (0.1UF/50V,Z TYPE,Y5V)	413-DCM280-773
SERVO	C248		nsp	00MEJ47601610	ELECT CAP.	47UF/16V,M,5*7,SS	413-CDVD2001-265
SERVO	C249		nsp	00MDK98104300	CER. CAP.	CHIP (0.1UF/50V,Z TYPE,Y5V)	413-DCM280-773
SERVO	C251		nsp	00MDK96103300	CER. CAP.	CHIP (0.01UF/50V,K TYPE,X7R)	413-DCM280-771
SERVO	C252		nsp	00MDK98104300	CER. CAP.	CHIP (0.1UF/50V,Z TYPE,Y5V)	413-DCM280-773
SERVO	C254		nsp	00MDK96103300	CER. CAP.	CHIP (0.01UF/50V,K TYPE,X7R)	413-DCM280-771
SERVO	C255		nsp	00MDK98104300	CER. CAP.	CHIP (0.1UF/50V,Z TYPE,Y5V)	413-DCM280-773
SERVO	C257		nsp	00MDK96103300	CER. CAP.	CHIP (0.01UF/50V,K TYPE,X7R)	413-DCM280-771
SERVO	C258		nsp	00MDK98104300	CER. CAP.	CHIP (0.1UF/50V,Z TYPE,Y5V)	413-DCM280-773
SERVO	C261		nsp	00MDK96103300	CER. CAP.	CHIP (0.01UF/50V,K TYPE,X7R)	413-DCM280-771
SERVO	C262		nsp	00MEJ47601610	ELECT CAP.	47UF/16V,M,5*7,SS	413-CDVD2001-265
SERVO	C263		nsp	00MDK98104300	CER. CAP.	CHIP (0.1UF/50V,Z TYPE,Y5V)	413-DCM280-773
SERVO	C264		nsp	00MDK96102300	CER. CAP.	CHIP (1000PF/50V,K TYPE,X7R)	413-DCM280-768
SERVO	C265		nsp	00MEJ10505010	ELECT CAP.	1UF/50V,M,4*7,MINI	413-SPPW3-234
SERVO	C266		nsp	00MDK98104300	CER. CAP.	CHIP (0.1UF/50V,Z TYPE,Y5V)	413-DCM280-773
SERVO	C267		nsp	00MEJ10602510	ELECT CAP.	10UF/25V,M,4*7,MINI	413-SPPW3-235
SERVO	C269		nsp	00MEJ10602510	ELECT CAP.	10UF/25V,M,4*7,MINI	413-SPPW3-235
SERVO	C270		nsp	00MEJ10602510	ELECT CAP.	10UF/25V,M,4*7,MINI	413-SPPW3-235
SERVO	C271		nsp	00MEJ10602510	ELECT CAP.	10UF/25V,M,4*7,MINI	413-SPPW3-235
SERVO	C272		nsp	00MEJ10602510	ELECT CAP.	10UF/25V,M,4*7,MINI	413-SPPW3-235
SERVO	C273		nsp	00MDK98104300	CER. CAP.	CHIP (0.1UF/50V,Z TYPE,Y5V)	413-DCM280-773
SERVO	C274		nsp	00MEJ47601610	ELECT CAP.	47UF/16V,M,5*7,SS	413-CDVD2001-265
SERVO	C275		nsp	nsp	FILM CAP.	POLYESTER (0.0012UF/50V,J)	413-HV3423K-343
SERVO	C276		nsp	nsp	FILM CAP.	POLYESTER (0.0012UF/50V,J)	413-HV3423K-343
SERVO	C277		nsp	00MDD95221300	CER. CAP.	CHIP (220PF/50V,TYPE NPO)	413-007USB-787
SERVO	C278		nsp	00MDD95221300	CER. CAP.	CHIP (220PF/50V,TYPE NPO)	413-007USB-787
SERVO	C279		nsp	00MDD95221300	CER. CAP.	CHIP (220PF/50V,TYPE NPO)	413-007USB-787
SERVO	C280		nsp	00MDD95221300	CER. CAP.	CHIP (220PF/50V,TYPE NPO)	413-007USB-787
SERVO	C281		nsp	nsp	CER. CAP.	CERAMIC (0.1UF/50V,Z,Y5V)	413-3113-035
SERVO	C282		nsp	00MDK98104300	CER. CAP.	CHIP (0.1UF/50V,Z TYPE,Y5V)	413-DCM280-773
SERVO	C283		nsp	nsp	CER. CAP.	CERAMIC (0.1UF/50V,Z,Y5V)	413-3113-035
SERVO	C284		nsp	00MDK98104300	CER. CAP.	CHIP (0.1UF/50V,Z TYPE,Y5V)	413-DCM280-773
SERVO	C285		nsp	nsp	FILM CAP.	POLYESTER (0.0022UF/50V,J)	413-3113-059
SERVO	C285		nsp	nsp	FILM CAP.	POLYESTER (0.0022UF/50V,J)	413-3113-059
SERVO	C287		nsp	nsp	FILM CAP.	POLYESTER (0.0018UF/50V,J)	413-HT7016-220
SERVO	C288		nsp	nsp	FILM CAP.	POLYESTER (0.0018UF/50V,J)	413-HT7016-220
SERVO	C289		nsp	00MEJ10602510	ELECT CAP.	10UF/25V,M,4*7,MINI	413-SPPW3-235
SERVO	C290		nsp	00MEJ10602510	ELECT CAP.	10UF/25V,M,4*7,MINI	413-SPPW3-235
SERVO	C291		nsp	00MDK96102300	CER. CAP.	CHIP (1000PF/50V,K TYPE,X7R)	413-DCM280-768
SERVO	C292		nsp	00MDK96102300	CER. CAP.	CHIP (1000PF/50V,K TYPE,X7R)	413-DCM280-768
SERVO	C293		nsp	00MDK98104300	CER. CAP.	CHIP (0.1UF/50V,Z TYPE,Y5V)	413-DCM280-773
SERVO	C294		nsp	00MDK98104300	CER. CAP.	CHIP (0.1UF/50V,Z TYPE,Y5V)	413-DCM280-773
SERVO	C295		nsp	00MDK98104300	CER. CAP.	CHIP (0.1UF/50V,Z TYPE,Y5V)	413-DCM280-773
SERVO	C296		nsp	00MDK98104300	CER. CAP.	CHIP (0.1UF/50V,Z TYPE,Y5V)	413-DCM280-773

NOTE : "nsp" PART IS LISTED FOR REFERENCE ONLY, MARANTZ WILL NOT SUPPLY THESE PARTS.

P.C.B. NAME	POS. NO.	VERS. COLOR	PART NO. (FOR EUR)	PART NO. (MZ)	PART NAME	DESCRIPTION	
SERVO	C315		nsp	00MDK98104300	CER. CAP.	CHIP (0.1UF/50V,Z TYPE,Y5V)	413-DCM280-773
SERVO	C316		nsp	00MDK98104300	CER. CAP.	CHIP (0.1UF/50V,Z TYPE,Y5V)	413-DCM280-773
SERVO	C317		nsp	00MEJ10701010	ELECT CAP.	100UF/10V,M,5*7,MINI	413-HMA2200-5017
SERVO	C324		nsp	00MEJ10701010	ELECT CAP.	100UF/10V,M,5*7,MINI	413-HMA2200-5017
SERVO	CN05		nsp	nsp		8P SOCKET (S8B-PH-K-S,P=2MM)	404-DV300-506A
SERVO	CN06		nsp	nsp		9P SOCKET (S9B-PH-K,P=2MM)	404-DJ3000-809A
SERVO	CN101		00D9410047308	00D9410047308	CONN.	16P 1.0 FFC CONN. (52207-1685)	404-HV3423K-583
SERVO	CN102		nsp	nsp	CONN.	6P SOCKET (S6B-PH-K-S,P=2MM)	404-90V1-101
SERVO	CN104		nsp	nsp	CONN.	7P SOCKET (S7B-PH-K,P=2MM)	404-HMD5000-785A
SERVO	CN105		nsp	nsp		8P SOCKET (S8B-PH-K-S,P=2MM)	404-DV300-506A
SERVO	CN106B		90M-YJ003050R	90M-YJ003050R	CONN.	14P 1.0 FFC CONN. (52207-1485)	404-EFX2-1860
SERVO	CN107B		00D9410047706	00D9410047706	CONN.	SOCKET(30PIN)	404-385-2088
SERVO	CN108B		00D9410047308	00D9410047308	CONN.	16P 1.0 FFC CONN. (52207-1685)	404-HV3423K-583
SERVO	CN301		nsp	nsp	CONN.	7P SOCKET (S7B-PH-K,P=2MM)	404-HMD5000-785A
SERVO	D101		00MHZ21303210	00MHZ21303210	DIODE	SWITCHING (1SS355,UMD2,SMD)	414-CD1000-075
SERVO	D104		90M-HZ200210R	90M-HZ200210R	DIODE	CHIP DIODE (DAN217U)	416-4001-297
SERVO	D105		90M-HW100790R	90M-HW100790R	PHOTO UNIT	INFRARED EMITTING (SIR-34ST3F)	410-4001-291
SERVO	D106		00MHZ21303210	00MHZ21303210	DIODE	SWITCHING (1SS355,UMD2,SMD)	414-CD1000-075
SERVO	D107		00MHZ21303210	00MHZ21303210	DIODE	SWITCHING (1SS355,UMD2,SMD)	414-CD1000-075
SERVO	D108		00MHZ21303210	00MHZ21303210	DIODE	SWITCHING (1SS355,UMD2,SMD)	414-CD1000-075
SERVO	D109		00MHD20002000	00MHD20002000	DIODE	1SS133-T77,300MW,40V,DO-34	414-3113-005
SERVO	D110		00MHD20002000	00MHZ21303210	DIODE	SWITCHING (1SS355,UMD2,SMD)	414-CD1000-075
SERVO	D201		00MHD20002000	00MHD20002000	DIODE	1SS133-T77,300MW,40V,DO-34	414-3113-005
SERVO	D202		00MHD20002000	00MHZ21303210	DIODE	SWITCHING (1SS355,UMD2,SMD)	414-CD1000-075
SERVO	D203		00MHD20002000	00MHZ21303210	DIODE	SWITCHING (1SS355,UMD2,SMD)	414-CD1000-075
SERVO	D204		00MHD20002000	00MHZ21303210	DIODE	SWITCHING (1SS355,UMD2,SMD)	414-CD1000-075
SERVO	D205		00MHD20002000	00MHZ21303210	DIODE	SWITCHING (1SS355,UMD2,SMD)	414-CD1000-075
SERVO	D206		00MHZ21303210	00MHZ21303210	DIODE	SWITCHING (1SS355,UMD2,SMD)	414-CD1000-075
SERVO	IC07		00MHC38105090	00MHC38105090	IC	IC (NJM78L05A,DIP/TO-92)	417-PMSE1-161
SERVO	IC101		941239002250M	941239002250M	IC	IC(CAT1117RADJ,SOT-223)	417-100U-795
SERVO	IC102		00D9410045805	00D9410045805	IC	IC (CXD3059)	417-385-760
SERVO	IC103		941239001620S	941239001620S	IC	IC (BA6218/BA6418N)	417-KC720-049
SERVO	IC104		00D9410046008	00D9410046008	IC	IC (SP232ACP,16PIN)	417-MP3-430
SERVO	IC105		00D9410045902	00D9410045902	IC	IC (BA6392FPE2,28PIN)	417-CDN24-340
SERVO	IC106		941239001620S	941239001620S	IC	IC (BA6218/BA6418N)	417-KC720-049
SERVO	IC107		00MHC10053090	00MHC10053090	IC	IC (NJM-2068DD,DIP-8)	417-KT300-027
SERVO	IC108		00MHC10053090	00MHC10053090	IC	IC (NJM-2068DD,DIP-8)	417-KT300-027
SERVO	IC109		00D9410021900	00D9410021900	IC	IC (BD4745G/BD4745G-TR)	417-HDJ2000-503
SERVO	IC110		nsp	nsp	CONN.	PLCC IC SOCKET	404-314-2240
SERVO	IC110		941243002380M	941243002380M	U-PRO	IC(SM8952AC25J,PLCC-44)	704-4003-8507
SERVO	IC112		00MHC10025880	00MHC10025880	IC	IC (CS4392-KZZ,TSSOP)	417-4001-765
SERVO	IC113		941239002270M	941239002270M	IC	IC (74HCT04D SO-P 14P)	417-KMDV280-101
SERVO	J04		00D9410025320	00D9410025320	CHIP RES.	CHIP (0 OHM,1/8W,1206,J,TP,150V)	412-DJ3000-414
SERVO	J05		00D9410025320	00D9410025320	CHIP RES.	CHIP (0 OHM,1/8W,1206,J,TP,150V)	412-DJ3000-414
SERVO	J110		00D9410025320	00D9410025320	CHIP RES.	CHIP (0 OHM,1/8W,1206,J,TP,150V)	412-DJ3000-414
SERVO	J127		nsp	nsp	CHIP RES.	CHIP (0 OHM,1/8W,0805,J,TP 150V)	412-HV3500K-367
SERVO	JK101		90M-YT004900R	90M-YT004900R	TERMINAL	2P CINCH RJ-1060B*10-0520A,R/W	420-4001-231
SERVO	JK102		90M-YT004890R	90M-YT004890R	TERMINAL	SIGNAL JACK RS-232S	420-4001-227
SERVO	JK103		90M-YT004870R	90M-YT004870R	TERMINAL	2P CINCH JACK (ORANGE)	420-4001-225
SERVO	JK104		90M-YT004930R	90M-YT004930R	TERMINAL	1P CINCH RJ-1081-01-0541A,BLACK	420-RCC1055-156
SERVO	JK105		941643002280S	941643002280S	TERMINAL	9P PHONE JACK FLASHER	420-4003-335
SERVO	L101		00D9580016900	00D9580016900	FERRITE CORE	RH03506ST-B,65OHM/100MHZ	415-HV3500K-090
SERVO	L102		00D9580016900	00D9580016900	FERRITE CORE	RH03506ST-B,65OHM/100MHZ	415-HV3500K-090
SERVO	L103		00D9580016900	00D9580016900	FERRITE CORE	RH03506ST-B,65OHM/100MHZ	415-HV3500K-090
SERVO	L104		00D9580016900	00D9580016900	FERRITE CORE	RH03506ST-B,65OHM/100MHZ	415-HV3500K-090
SERVO	L105		00D9580016900	00D9580016900	FERRITE CORE	RH03506ST-B,65OHM/100MHZ	415-HV3500K-090
SERVO	L107		90M-FC900450R	90M-FC900450R	FERRITE CORE	BEAD(RH03506BT-B,RT)	415-DCM370E3-134
SERVO	L108		90M-FC900450R	90M-FC900450R	FERRITE CORE	BEAD(RH03506BT-B,RT)	415-DCM370E3-134
SERVO	L109		90M-FC900450R	90M-FC900450R	FERRITE CORE	BEAD(RH03506BT-B,RT)	415-DCM370E3-134
SERVO	L110		90M-FC900450R	90M-FC900450R	FERRITE CORE	BEAD(RH03506BT-B,RT)	415-DCM370E3-134
SERVO	L111		00D9580016900	00D9580016900	FERRITE CORE	RH03506ST-B,65OHM/100MHZ	415-HV3500K-090
SERVO	L112		00D9580016900	00D9580016900	FERRITE CORE	RH03506ST-B,65OHM/100MHZ	415-HV3500K-090
SERVO	L113		941115001080S	941115001080S	COIL	INDUCTOR(10uH,AL0204ST-100K-S-A)	415-HMD5000-097
SERVO	L114		00D9580016900	00D9580016900	FERRITE CORE	RH03506ST-B,65OHM/100MHZ	415-HV3500K-090
SERVO	L115		00D9580016900	00D9580016900	FERRITE CORE	RH03506ST-B,65OHM/100MHZ	415-HV3500K-090
SERVO	MD101		90M-HW100800R	90M-HW100800R	PHOTO UNIT	RECEIVER (RPM6936,RSIP-A3)	416-4001-295

NOTE : "nsp" PART IS LISTED FOR REFERENCE ONLY, MARANTZ WILL NOT SUPPLY THESE PARTS.

P.C.B. NAME	POS. NO.	VERS. COLOR	PART NO. (FOR EUR)	PART NO. (MZ)	PART NAME	DESCRIPTION	
SERVO	MD102		90M-YT004880R	90M-YT004880R	OPT. CONN.	OPTICAL FIBER JACK	420-4001-226
SERVO	Q01		00MBA10002210	00MBA10002210	TRS.	TRS. (DTA124EKA-T146,SMT3)	416-CTB200-178
SERVO	Q02		00MBA10002210	00MBA10002210	TRS.	TRS. (DTA124EKA-T146,SMT3)	416-CTB200-178
SERVO	Q03		00MBA20002210	00MBA20002210	TRS.	TRS. (DTC124EKAT146)	416-CDN88-044
SERVO	Q04		00MBA20002210	00MBA20002210	TRS.	TRS. (DTC124EKAT146)	416-CDN88-044
SERVO	Q101		00D9410046309	00D9410046309	TRS.	TRS. (2SA1037AKT146R)	416-CDN88-045
SERVO	Q102		00MBA10002210	00MBA10002210	TRS.	TRS. (DTA124EKA-T146,SMT3)	416-CTB200-178
SERVO	Q103		00D9410046406	00D9410046406	TRS.	TRS. (2SC4695-TB-E,SOT23/CP)	416-DAIA-273
SERVO	Q104		00D9410046406	00D9410046406	TRS.	TRS. (2SC4695-TB-E,SOT23/CP)	416-DAIA-273
SERVO	Q105		00D9410046406	00D9410046406	TRS.	TRS. (2SC4695-TB-E,SOT23/CP)	416-DAIA-273
SERVO	Q106		00D9410046406	00D9410046406	TRS.	TRS. (2SC4695-TB-E,SOT23/CP)	416-DAIA-273
SERVO	Q107		00MBA10007210	00MBA10007210	TRS.	TRS. (DTA114ES)	416-HMA2200-080
SERVO	Q108		00MBA10007210	00MBA10007210	TRS.	TRS. (DTA114ES)	416-HMA2200-080
SERVO	Q109		00D9587057409	00D9587057409	CHIP TRS.	CHIP TRS. (2SC2412KT146R)	416-CDN88-051
SERVO	Q110		00D9587057409	00D9587057409	CHIP TRS.	CHIP TRS. (2SC2412KT146R)	416-CDN88-051
SERVO	Q111		00MBA20002210	00MBA20002210	TRS.	TRS. (DTC124EKAT146)	416-CDN88-044
SERVO	Q112		00MBA20002210	00MBA20002210	TRS.	TRS. (DTC124EKAT146)	416-CDN88-044
SERVO	Q113		00MBA20002210	00MBA20002210	TRS.	TRS. (DTC124EKAT146)	416-CDN88-044
SERVO	Q114		00MBA20002210	00MBA20002210	TRS.	TRS. (DTC124EKAT146)	416-CDN88-044
SERVO	Q115		00MBA20002210	00MBA20002210	TRS.	TRS. (DTC124EKAT146)	416-CDN88-044
SERVO	Q116		00MBA20002210	00MBA20002210	TRS.	TRS. (DTC124EKAT146)	416-CDN88-044
SERVO	R101		nsp	00MNN05220610	CHIP RES.	CHIP (22 OHM,1/10W,F,TP,50V)	412-CDVD2001-554
SERVO	R102		nsp	nsp	CHIP RES.	CHIP (11KOHM,1/10W,J,TP,50V)	412-900-1012
SERVO	R103		nsp	00MNN05474610	CHIP RES.	CHIP (470K OHM,1/10W,J,TP,50V)	412-007USB-707
SERVO	R104		nsp	00MNN05103610	CHIP RES.	CHIP (10K OHM,1/10W,J,TP,50V)	412-CDVD2001-534
SERVO	R104		nsp	00MNN05103610	CHIP RES.	CHIP (10K OHM,1/10W,J,TP,50V)	412-CDVD2001-534
SERVO	R105		nsp	00MNN05104610	CHIP RES.	CHIP (100K OHM,1/10W,J,TP,50V)	412-CDVD2001-537
SERVO	R106		nsp	00MNN05105610	CHIP RES.	CHIP (1M OHM,1/10W,J,TP,50V)	412-CDVD2001-546
SERVO	R109		nsp	00MNN05102610	CHIP RES.	CHIP (1K OHM,1/10W,J,TP,50V)	412-CDVD2001-540
SERVO	R110		nsp	00MNN05472610	CHIP RES.	CHIP (4.7K OHM,1/10W,J,TP,50V)	412-CDVD2001-523
SERVO	R110		nsp	00MNN05472610	CHIP RES.	CHIP (4.7K OHM,1/10W,J,TP,50V)	412-CDVD2001-523
SERVO	R112		nsp	00MNN05474610	CHIP RES.	CHIP (470K OHM,1/10W,J,TP,50V)	412-007USB-707
SERVO	R113		nsp	00MNN05474610	CHIP RES.	CHIP (470K OHM,1/10W,J,TP,50V)	412-007USB-707
SERVO	R114		nsp	00MNN05332610	CHIP RES.	CHIP (3.3K OHM,1/10W,J,TP,50V)	412-007USB-699
SERVO	R115		nsp	00MNN05153610	CHIP RES.	CHIP (15K OHM,1/10W, J,TP,50V)	412-007USB-687
SERVO	R116		nsp	00MNN05153610	CHIP RES.	CHIP (15K OHM,1/10W, J,TP,50V)	412-007USB-687
SERVO	R117		nsp	00MNN05103610	CHIP RES.	CHIP (10K OHM,1/10W,J,TP,50V)	412-CDVD2001-534
SERVO	R117		nsp	00MNN05103610	CHIP RES.	CHIP (10K OHM,1/10W,J,TP,50V)	412-CDVD2001-534
SERVO	R118		nsp	00MNN05103610	CHIP RES.	CHIP (10K OHM,1/10W,J,TP,50V)	412-CDVD2001-534
SERVO	R118		nsp	00MNN05103610	CHIP RES.	CHIP (10K OHM,1/10W,J,TP,50V)	412-CDVD2001-534
SERVO	R118		nsp	00MNN05103610	CHIP RES.	CHIP (10K OHM,1/10W,J,TP,50V)	412-CDVD2001-534
SERVO	R119		nsp	00MNN05154610	CHIP RES.	CHIP (150K OHM,1/10W,J,TP ,50V)	412-007USB-688
SERVO	R120		nsp	nsp	RES.	CARBON (47K OHM,1/6W,J,T-26)	412-3113-063
SERVO	R123		nsp	00MNN05473610	CHIP RES.	CHIP (47K OHM,1/10W,J,TP ,50V)	412-CDVD2001-532
SERVO	R124		nsp	00MNN05103610	CHIP RES.	CHIP (10K OHM,1/10W,J,TP,50V)	412-CDVD2001-534
SERVO	R125		nsp	00MNN05183610	CHIP RES.	CHIP (18K OHM,1/10W,J,TP,50V)	412-007USB-703
SERVO	R126		nsp	00MNN05473610	CHIP RES.	CHIP (47K OHM,1/10W,J,TP ,50V)	412-CDVD2001-532
SERVO	R128		nsp	00MNN05105610	CHIP RES.	CHIP (1M OHM,1/10W,J,TP,50V)	412-CDVD2001-546
SERVO	R130		nsp	nsp	CHIP RES.	CHIP (300OHM,1/10W,F,TP,50V)	412-900-975
SERVO	R131		nsp	nsp	RES.	CARBON (1.8K OHM,1/6W,J,T-26)	412-3113-075
SERVO	R132		nsp	nsp	RES.	CARBON (10K OHM,1/6W,J,T-26)	412-3113-068
SERVO	R133		nsp	nsp	RES.	CARBON (10K OHM,1/6W,J,T-26)	412-3113-068
SERVO	R134		nsp	nsp	RES.	CARBON (10K OHM,1/6W,J,T-26)	412-3113-068
SERVO	R135		nsp	nsp	RES.	CARBON (10K OHM,1/6W,J,T-26)	412-3113-068
SERVO	R139		nsp	00MNN05221610	CHIP RES.	CHIP (220 OHM,1/10W,J,TP 50V)	412-CDVD2001-521
SERVO	R140		nsp	00MNN05221610	CHIP RES.	CHIP (220 OHM,1/10W,J,TP 50V)	412-CDVD2001-521
SERVO	R141		nsp	00MNN05221610	CHIP RES.	CHIP (220 OHM,1/10W,J,TP 50V)	412-CDVD2001-521
SERVO	R147		nsp	nsp	RES.	CARBON FILM(330 OHM,1/6W,J,T-26)	412-KM300-118
SERVO	R148		nsp	nsp	RES.	CARBON FILM(330 OHM,1/6W,J,T-26)	412-KM300-118
SERVO	R149		nsp	nsp	CHIP RES.	CHIP (330OHM,1/10W,F,TP,50V)	412-900-983
SERVO	R150		nsp	nsp	RES.	CARBON FILM(330 OHM,1/6W,J,T-26)	412-KM300-118
SERVO	R151		nsp	nsp	RES.	CARBON FILM(330 OHM,1/6W,J,T-26)	412-KM300-118
SERVO	R152		nsp	nsp	RES.	CARBON (10K OHM,1/6W,J,T-26)	412-3113-068
SERVO	R157		nsp	00MNN05104610	CHIP RES.	CHIP (100K OHM,1/10W,J,TP,50V)	412-CDVD2001-537
SERVO	R158		nsp	00MNN05104610	CHIP RES.	CHIP (100K OHM,1/10W,J,TP,50V)	412-CDVD2001-537
SERVO	R159		nsp	00MNN05103610	CHIP RES.	CHIP (10K OHM,1/10W,J,TP,50V)	412-CDVD2001-534

NOTE : "nsp" PART IS LISTED FOR REFERENCE ONLY, MARANTZ WILL NOT SUPPLY THESE PARTS.

P.C.B. NAME	POS. NO.	VERS. COLOR	PART NO. (FOR EUR)	PART NO. (MZ)	PART NAME	DESCRIPTION	
SERVO	R160		nsp	nsp	CHIP RES.	CHIP (0 OHM,1/10W,J,TP,50V)	412-CDVD2001-552
SERVO	R161		nsp	nsp	CHIP RES.	CHIP (0 OHM,1/10W,J,TP,50V)	412-CDVD2001-552
SERVO	R162		nsp	00MNN05103610	CHIP RES.	CHIP (10K OHM,1/10W,J,TP,50V)	412-CDVD2001-534
SERVO	R163		nsp	nsp	RES.	CARBON (10K OHM,1/6W,J,T-26)	412-3113-068
SERVO	R164		nsp	nsp	RES.	CARBON (10K OHM,1/6W,J,T-26)	412-3113-068
SERVO	R165		nsp	00MNN05220610	CHIP RES.	CHIP (22 OHM,1/10W,F,TP,50V)	412-CDVD2001-554
SERVO	R166		nsp	00MNN05680610	CHIP RES.	CHIP (68OHM,1/10W,J,TP,50V)	412-900-1016
SERVO	R167		nsp	00MNN05103610	CHIP RES.	CHIP (10K OHM,1/10W,J,TP,50V)	412-CDVD2001-534
SERVO	R168		nsp	nsp	CHIP RES.	CHIP (4.7OHM,1/10W,J,50V)	412-007USB-676
SERVO	R171		nsp	nsp	CHIP RES.	CHIP (0 OHM,1/10W,J,TP,50V)	412-CDVD2001-552
SERVO	R172		nsp	nsp	CHIP RES.	CHIP (0 OHM,1/10W,J,TP,50V)	412-CDVD2001-552
SERVO	R173		nsp	nsp	CHIP RES.	CHIP (0 OHM,1/10W,J,TP,50V)	412-CDVD2001-552
SERVO	R174		nsp	00MNN05220610	CHIP RES.	CHIP (22 OHM,1/10W,F,TP,50V)	412-CDVD2001-554
SERVO	R175		nsp	00MNN05101610	CHIP RES.	CHIP(100 OHM,1/10W,J,TP,50V)	412-CDVD2001-530
SERVO	R178		nsp	00MNN05101610	CHIP RES.	CHIP(100 OHM,1/10W,J,TP,50V)	412-CDVD2001-530
SERVO	R179		nsp	00MNN05101610	CHIP RES.	CHIP(100 OHM,1/10W,J,TP,50V)	412-CDVD2001-530
SERVO	R181		nsp	00MNN05101610	CHIP RES.	CHIP(100 OHM,1/10W,J,TP,50V)	412-CDVD2001-530
SERVO	R182		nsp	00MNN05101610	CHIP RES.	CHIP(100 OHM,1/10W,J,TP,50V)	412-CDVD2001-530
SERVO	R183		nsp	00MNN05101610	CHIP RES.	CHIP(100 OHM,1/10W,J,TP,50V)	412-CDVD2001-530
SERVO	R184		nsp	00MNN05101610	CHIP RES.	CHIP(100 OHM,1/10W,J,TP,50V)	412-CDVD2001-530
SERVO	R185		nsp	00MNN05103610	CHIP RES.	CHIP (10K OHM,1/10W,J,TP,50V)	412-CDVD2001-534
SERVO	R192		nsp	nsp	RES.	CARBON (4.7K OHM,1/6W,J,T-26)	412-3113-055
SERVO	R197		nsp	00MNN05470610	CHIP RES.	CHIP ((47 OHM,1/10WM,J,TP,50V)	412-007USB-697
SERVO	R198		nsp	00MNN05101610	CHIP RES.	CHIP(100 OHM,1/10W,J,TP,50V)	412-CDVD2001-530
SERVO	R199		nsp	00MNN05101610	CHIP RES.	CHIP(100 OHM,1/10W,J,TP,50V)	412-CDVD2001-530
SERVO	R200		nsp	00MNN05103610	CHIP RES.	CHIP (10K OHM,1/10W,J,TP,50V)	412-CDVD2001-534
SERVO	R200		nsp	00MNN05103610	CHIP RES.	CHIP (10K OHM,1/10W,J,TP,50V)	412-CDVD2001-534
SERVO	R214		nsp	nsp	CHIP RES.	CHIP(82K OHM 1/16W,J,TP)	412-CR701-5222
SERVO	R229		nsp	nsp	RES.	CARBON (2.7K OHM,1/6W,J,T-26)	412-3113-073
SERVO	R233		nsp	nsp	CHIP RES.	CHIP(47K OHM,1/10W,J,TP ,50V)	412-CDVD2001-532
SERVO	R234		nsp	nsp	RES.	CARBON (1K OHM,1/6W,J,T-26)	412-3113-078
SERVO	R237		nsp	nsp	CHIP RES.	CHIP (30KOHM,1/10W,J,50V)	412-007USB-672
SERVO	R238		nsp	nsp	CHIP RES.	CHIP (30KOHM,1/10W,J,50V)	412-007USB-672
SERVO	R239		nsp	00MNN05822610	CHIP RES.	CHIP (8.2K,1/10W,F,TP,50V)	412-900-987
SERVO	R240		nsp	00MNN05822610	CHIP RES.	CHIP (8.2K,1/10W,F,TP,50V)	412-900-987
SERVO	R241		nsp	00MNN05822610	CHIP RES.	CHIP (8.2K,1/10W,F,TP,50V)	412-900-987
SERVO	R242		nsp	00MNN05822610	CHIP RES.	CHIP (8.2K,1/10W,F,TP,50V)	412-900-987
SERVO	R243		nsp	00MNN05822610	CHIP RES.	CHIP (8.2K,1/10W,F,TP,50V)	412-900-987
SERVO	R244		nsp	00MNN05822610	CHIP RES.	CHIP (8.2K,1/10W,F,TP,50V)	412-900-987
SERVO	R245		nsp	00MNN05332610	CHIP RES.	CHIP (3.3K OHM,1/10W,J,TP,50V)	412-007USB-699
SERVO	R246		nsp	00MNN05332610	CHIP RES.	CHIP (3.3K OHM,1/10W,J,TP,50V)	412-007USB-699
SERVO	R247		nsp	00MNN05103610	CHIP RES.	CHIP (10K OHM,1/10W,J,TP,50V)	412-CDVD2001-534
SERVO	R248		nsp	00MNN05103610	CHIP RES.	CHIP (10K OHM,1/10W,J,TP,50V)	412-CDVD2001-534
SERVO	R249		nsp	00MNN05332610	CHIP RES.	CHIP (3.3K OHM,1/10W,J,TP,50V)	412-007USB-699
SERVO	R250		nsp	00MNN05332610	CHIP RES.	CHIP (3.3K OHM,1/10W,J,TP,50V)	412-007USB-699
SERVO	R251		nsp	nsp	RES.	CARBON (750 OHM,1/6W,J,T-26)	412-4001-1101
SERVO	R252		nsp	nsp	RES.	CARBON (750 OHM,1/6W,J,T-26)	412-4001-1101
SERVO	R253		nsp	nsp	RES.	CARBON (2.7K OHM,1/6W,J,T-26)	412-3113-073
SERVO	R254		nsp	nsp	RES.	CARBON (2.7K OHM,1/6W,J,T-26)	412-3113-073
SERVO	R255		nsp	00MNN05221610	CHIP RES.	CHIP (220 OHM,1/10W,J,TP 50V)	412-CDVD2001-521
SERVO	R256		nsp	00MNN05221610	CHIP RES.	CHIP (220 OHM,1/10W,J,TP 50V)	412-CDVD2001-521
SERVO	R257		nsp	00MNN05472610	CHIP RES.	CHIP (4.7K OHM,1/10W,J,TP,50V)	412-CDVD2001-523
SERVO	R257		nsp	00MNN05472610	CHIP RES.	CHIP (4.7K OHM,1/10W,J,TP,50V)	412-CDVD2001-523
SERVO	R258		nsp	00MNN05472610	CHIP RES.	CHIP (4.7K OHM,1/10W,J,TP,50V)	412-CDVD2001-523
SERVO	R258		nsp	00MNN05472610	CHIP RES.	CHIP (4.7K OHM,1/10W,J,TP,50V)	412-CDVD2001-523
SERVO	R259		nsp	00MNN05472610	CHIP RES.	CHIP (4.7K OHM,1/10W,J,TP,50V)	412-CDVD2001-523
SERVO	R259		nsp	00MNN05472610	CHIP RES.	CHIP (4.7K OHM,1/10W,J,TP,50V)	412-CDVD2001-523
SERVO	R260		nsp	00MNN05472610	CHIP RES.	CHIP (4.7K OHM,1/10W,J,TP,50V)	412-CDVD2001-523
SERVO	R260		nsp	00MNN05472610	CHIP RES.	CHIP (4.7K OHM,1/10W,J,TP,50V)	412-CDVD2001-523
SERVO	R261		nsp	00MNN05221610	CHIP RES.	CHIP (220 OHM,1/10W,J,TP 50V)	412-CDVD2001-521
SERVO	R262		nsp	00MNN05221610	CHIP RES.	CHIP (220 OHM,1/10W,J,TP 50V)	412-CDVD2001-521
SERVO	R263		nsp	00MNN05104610	CHIP RES.	CHIP (100K OHM,1/10W,J,TP,50V)	412-CDVD2001-537
SERVO	R264		nsp	00MNN05104610	CHIP RES.	CHIP (100K OHM,1/10W,J,TP,50V)	412-CDVD2001-537
SERVO	R265		nsp	00MNN05221610	CHIP RES.	CHIP (220 OHM,1/10W,J,TP 50V)	412-CDVD2001-521
SERVO	R266		nsp	00MNN05221610	CHIP RES.	CHIP (220 OHM,1/10W,J,TP 50V)	412-CDVD2001-521
SERVO	R267		nsp	00MNN05101610	CHIP RES.	CHIP(100 OHM,1/10W,J,TP,50V)	412-CDVD2001-530

NOTE : "nsp" PART IS LISTED FOR REFERENCE ONLY, MARANTZ WILL NOT SUPPLY THESE PARTS.

P.C.B. NAME	POS. NO.	VERS. COLOR	PART NO. (FOR EUR)	PART NO. (MZ)	PART NAME	DESCRIPTION	
SERVO	R267		nsp	00MNN05101610	CHIP RES.	CHIP(100 OHM,1/10W,J,TP,50V)	412-CDVD2001-530
SERVO	R268		nsp	00MNN05221610	CHIP RES.	CHIP (220 OHM,1/10W,J,TP 50V)	412-CDVD2001-521
SERVO	R269		nsp	00MNN05221610	CHIP RES.	CHIP (220 OHM,1/10W,J,TP 50V)	412-CDVD2001-521
SERVO	R273		nsp	nsp	CHIP RES.	CHIP (0 OHM,1/10W,J,TP,50V)	412-CDVD2001-552
SERVO	RB02		nsp	nsp	RES. COMPO.	4.7K OHM,1/8W,J,RA TYPE	412-DV300-5139
SERVO	RB101		90M-BW000430R	90M-BW000430R	RES. COMPO.	10K OHM,J,9P8R,RA TYPE	412-DV300-5143
SERVO	SW101		90M-SS000770R	90M-SS000770R	SW	SLIDE SW (SSSF112NA1-HF,2PIN)	403-DV300-5007
SERVO	TX01		00D9580020705	00D9580020705	COIL	COIL(P-7GB)	415-RCC955A-091
SERVO	X101		00D9580015600	00D9580015600	X'TAL	AL,6063-T5,16.5*16*45,SILVER	427-KC710-019
SERVO	X102		90M-JX001300R	90M-JX001300R	X'TAL	CRYSTAL (CSA-309,11.059MHZ,3*9)	427-RCC1055-107
SERVO	A		nsp	nsp	CORD	WIRE	406-M200-045
SERVO			nsp	nsp	COVER	ANTI-DAZZLING COVER	300-4001-1401
SERVO			nsp	nsp	HEATSINK	IC HEATSINK	300-700-1726
SERVO			nsp	nsp	PLATE	IC HEATSINK FIXED PLATE	300-700-1727
SERVO			nsp	nsp	BRACKET	BRACKET (L TYPE)	300-HDJ7000-472
SERVO			941606002150S	941606002150S	CONN.	30P 1.0 FFC CABLE	406-4003-1091
SERVO			941606002160S	941606002160S	CONN.	14P 1.0 FFC CABLE	406-4003-1092
SERVO			nsp	nsp	HOLDER	LED HOLDER	504-BJ2300-039
					CONTROL PWB ASSY		
CTRL	C401		nsp	00MEJ10701010	ELECT CAP.	100UF/10V,M,5*7,MINI	413-HMA2200-5017
CTRL	C402		nsp	00MDK98104300	CER. CAP.	CHIP (0.1UF/50V,Z TYPE,Y5V)	413-DCM280-773
CTRL	C403		nsp	00MEJ10603510	ELECT CAP.	10UF/35V,M,4*7,MINI	413-810-919
CTRL	C404		nsp	90M-EJ000110R	ELECT CAP.	47UF/25V,M,6.3*7,MINI	413-SPPW3-237
CTRL	C405		nsp	00MDK98104300	CER. CAP.	CHIP (0.1UF/50V,Z TYPE,Y5V)	413-DCM280-773
CTRL	C406		nsp	00MDD95470300	CER. CAP.	CHIP (47PF/50V,J TYPE,NPO)	413-007USB-784
CTRL	C407		nsp	00MDK98104300	CER. CAP.	CHIP (0.1UF/50V,Z TYPE,Y5V)	413-DCM280-773
CTRL	C408		nsp	00MDK98104300	CER. CAP.	CHIP (0.1UF/50V,Z TYPE,Y5V)	413-DCM280-773
CTRL	CN01		nsp	nsp	CONN.	5P SOCKET(CKM2001WR-5P)	404-KMD280A-318A
CTRL	CN02		nsp	nsp	CONN.	5P SOCKET(CKM2001WR-5P)	404-KMD280A-318A
CTRL	CN108A		00D9410047308	00D9410047308	CONN.	16P 1.0 FFC CONN. (52207-1685)	404-HV3423K-583
CTRL	D402		00MHZ21303210	00MHZ21303210	DIODE	SWITCHING (1SS355,UMD2,SMD)	414-CD1000-075
CTRL	D403		00MHZ21303210	00MHZ21303210	DIODE	SWITCHING (1SS355,UMD2,SMD)	414-CD1000-075
CTRL	D404		00MHZ21303210	00MHZ21303210	DIODE	SWITCHING (1SS355,UMD2,SMD)	414-CD1000-075
CTRL	D405		00MHZ21303210	00MHZ21303210	DIODE	SWITCHING (1SS355,UMD2,SMD)	414-CD1000-075
CTRL	D406		941209000470S	941209000470S	DIODE	DIODE(RSB6.8S 150mW.6.8V EMD2 ROHM)	414-DJ1100G-207
CTRL	D407		941209000470S	941209000470S	DIODE	DIODE(RSB6.8S 150mW.6.8V EMD2 ROHM)	414-DJ1100G-207
CTRL	D408		941209000470S	941209000470S	DIODE	DIODE(RSB6.8S 150mW.6.8V EMD2 ROHM)	414-DJ1100G-207
CTRL	D409		941209000470S	941209000470S	DIODE	DIODE(RSB6.8S 150mW.6.8V EMD2 ROHM)	414-DJ1100G-207
CTRL	IC401		941239002260M	941239002260M	IC	IC (HT16511,QFP-52)	417-HV3500K-250B
CTRL	MD401		90M-HW100810R	90M-HW100810R	PHOTO UNIT	RECEIVER (RPM6936,RAIP-A3,V4)	416-4001-296
CTRL	R401		nsp	nsp		CHIP (51KOHM,1/10W,J,TP,50V)	412-900-977
CTRL	R403		nsp	00MNN05103610	CHIP RES.	CHIP (10K OHM,1/10W,J,TP,50V)	412-CDVD2001-534
CTRL	R405		nsp	nsp	RES.	CARBON (47 OHM,1/4W,J,T-52)	412-PMSE1-156
CTRL	R406		nsp	nsp	CHIP RES.	CHIP (1.5K OHM,1/10W,J,TP ,50V)	412-CDVD2001-550
CTRL	R407		nsp	nsp	CHIP RES.	CHIP (1.5K OHM,1/10W,J,TP ,50V)	412-CDVD2001-550
CTRL	R408		nsp	nsp	CHIP RES.	CHIP (1.5K OHM,1/10W,J,TP ,50V)	412-CDVD2001-550
CTRL	R409		nsp	00MNN05103610	CHIP RES.	CHIP (10K OHM,1/10W,J,TP,50V)	412-CDVD2001-534
CTRL	R410		nsp	00MNN05103610	CHIP RES.	CHIP (10K OHM,1/10W,J,TP,50V)	412-CDVD2001-534
CTRL	R411		nsp	00MNN05103610	CHIP RES.	CHIP (10K OHM,1/10W,J,TP,50V)	412-CDVD2001-534
CTRL	RB401		90M-BW000440R	90M-BW000440R	RES. COMPO.	(10K OHM,J,5P4R,RA TYPE)	412-HDJ200-264
CTRL	SW401		00D9580018306	00D9580018306	SW	TACT SW (H=5MM)	403-DCM270X-101A
CTRL	SW402		00D9580018306	00D9580018306	SW	TACT SW (H=5MM)	403-DCM270X-101A
CTRL	SW403		00D9580018306	00D9580018306	SW	TACT SW (H=5MM)	403-DCM270X-101A
CTRL	SW404		00D9580018306	00D9580018306	SW	TACT SW (H=5MM)	403-DCM270X-101A
CTRL	SW409		00D9580018306	00D9580018306	SW	TACT SW (H=5MM)	403-DCM270X-101A
CTRL	SW410		00D9580018306	00D9580018306	SW	TACT SW (H=5MM)	403-DCM270X-101A
CTRL	SW411		00D9580018306	00D9580018306	SW	TACT SW (H=5MM)	403-DCM270X-101A
CTRL	SW412		00D9580018306	00D9580018306	SW	TACT SW (H=5MM)	403-DCM270X-101A
CTRL	SW415		00D9580018306	00D9580018306	SW	TACT SW (H=5MM)	403-DCM270X-101A
CTRL	SW416		00D9580018306	00D9580018306	SW	TACT SW (H=5MM)	403-DCM270X-101A
CTRL	VFD401		00D9410048802	00D9410048802	DISPLAY	VFD(HNA-07MM26)	410-385-290
			nsp	nsp	BUFFER	CUSHION FOR SENSOR	612-DCM370-071
			nsp	nsp	WASHER	VFD WASHER	612-HV3700K-059
					POWER PWB ASSY		
POWER	C01		nsp	nsp	CER. CAP.	CERAMIC (0.1UF/50V,Z,Y5V)	413-3113-035
POWER	C01		nsp	nsp	CER. CAP.	CERAMIC (0.1UF/50V,Z,Y5V)	413-3113-035

NOTE : "nsp" PART IS LISTED FOR REFERENCE ONLY, MARANTZ WILL NOT SUPPLY THESE PARTS.

P.C.B. NAME	POS. NO.	VERS. COLOR	PART NO. (FOR EUR)	PART NO. (MZ)	PART NAME	DESCRIPTION	
POWER	C02		nsp	nsp	CER. CAP.	CERAMIC (0.1UF/50V,Z,Y5V)	413-3113-035
POWER	C02		nsp	nsp	CER. CAP.	CERAMIC (0.1UF/50V,Z,Y5V)	413-3113-035
POWER	C03		00D9580044105	00D9580044105	ELECT CAP.	1000UF/25V,M, 105℃ ,10*20)	413-DJ1900-111
POWER	C04		00D9580044105	00D9580044105	ELECT CAP.	1000UF/25V,M, 105℃ ,10*20)	413-DJ1900-111
POWER	C05		nsp	00MOA10701020	ELECT CAP.	100UF/10V,M,5*11	413-3113-046
POWER	C06		nsp	00MOA10701020	ELECT CAP.	100UF/10V,M,5*11	413-3113-046
POWER	C07		nsp	nsp	CER. CAP.	CERAMIC (0.1UF/50V,Z,Y5V)	413-3113-035
POWER	C07		nsp	nsp	CER. CAP.	CERAMIC (0.1UF/50V,Z,Y5V)	413-3113-035
POWER	C08		nsp	00MOA47801620	ELECT CAP.	4700UF/16V,M,16*26	413-DV300-293
POWER	C09		nsp	nsp	CER. CAP.	CERAMIC (0.1UF/50V,Z,Y5V)	413-3113-035
POWER	C09		nsp	nsp	CER. CAP.	CERAMIC (0.1UF/50V,Z,Y5V)	413-3113-035
POWER	C10		nsp	00MOA10701020	ELECT CAP.	100UF/10V,M,5*11	413-3113-046
POWER	C11		nsp	nsp	CER. CAP.	CERAMIC (0.1UF/50V,Z,Y5V)	413-3113-035
POWER	C11		nsp	nsp	CER. CAP.	CERAMIC (0.1UF/50V,Z,Y5V)	413-3113-035
POWER	C12		nsp	00MOA10701020	ELECT CAP.	100UF/10V,M,5*11	413-3113-046
POWER	C13		nsp	00MOA22701620	ELECT CAP.	220UF/16V,M,6.3*11	413-KT300-102
POWER	C14		nsp	nsp	CER. CAP.	CERAMIC (0.1UF/50V,Z,Y5V)	413-3113-035
POWER	C14		nsp	nsp	CER. CAP.	CERAMIC (0.1UF/50V,Z,Y5V)	413-3113-035
POWER	C15		nsp	00MOA10705020	ELECT CAP.	100UF/50V,M,8*11	413-HC1421FR-277
POWER	C16		nsp	00D9410024211	ELECT CAP.	100uF/35V,M,105℃ ,6.3*11(Cd,Pb,Hg,Cr)	413-HMD5000-356
POWER	C17		nsp	00MOA10603520	ELECT CAP.	10UF/35V,M,5*11	413-HC1421FR-227
POWER	C18		nsp	nsp	CER. CAP.	CERAMIC (0.1UF/50V,Z,Y5V)	413-3113-035
POWER	C18		nsp	nsp	CER. CAP.	CERAMIC (0.1UF/50V,Z,Y5V)	413-3113-035
POWER	C19		941134002220S	941134002220S	ELECT CAP.	2200UF/25V,M, 105℃ ,13*21)(Cd,Pb,Hg,Cr)	413-HT8023K-188
POWER	C20		nsp	nsp	CER. CAP.	CERAMIC (0.1UF/50V,Z,Y5V)	413-3113-035
POWER	C20		nsp	nsp	CER. CAP.	CERAMIC (0.1UF/50V,Z,Y5V)	413-3113-035
POWER	C20		nsp	nsp	CER. CAP.	CERAMIC (0.1UF/50V,Z,Y5V)	413-3113-035
POWER	C21		nsp	nsp	CER. CAP.	CERAMIC (0.022UF/50V,Z,Z5V)	413-501-105
POWER	C22		nsp	nsp	CER. CAP.	CERAMIC (0.1UF/50V,Z,Y5V)	413-3113-035
POWER	C22		nsp	nsp	CER. CAP.	CERAMIC (0.1UF/50V,Z,Y5V)	413-3113-035
POWER	C23		nsp	00MDK98104300	CER. CAP.	CHIP (0.1UF/50V,Z TYPE,Y5V)	413-DCM280-773
POWER	C24		nsp	00MDK98104300	CER. CAP.	CHIP (0.1UF/50V,Z TYPE,Y5V)	413-DCM280-773
POWER	C25		nsp	00MOA10701020	ELECT CAP.	100UF/10V,M,5*11	413-3113-046
POWER	C26		nsp	00MOA22701020	ELECT CAP.	220UF/10V,M,6.3*11	413-KC220-119
POWER	⚠C27		90M-DK100940R	90M-DK100940R	CER. CAP.	! SAFETY (4700PF/250V,M,,Y5V)	413-1431-104
POWER	C28		nsp	nsp	CER. CAP.	CERAMIC (0.1UF/50V,Z,Y5V)	413-3113-035
POWER	C28		nsp	nsp	CER. CAP.	CERAMIC (0.1UF/50V,Z,Y5V)	413-3113-035
POWER	C29		nsp	nsp	CER. CAP.	CERAMIC (0.1UF/50V,Z,Y5V)	413-3113-035
POWER	C29		nsp	nsp	CER. CAP.	CERAMIC (0.1UF/50V,Z,Y5V)	413-3113-035
POWER	C30		nsp	nsp	CER. CAP.	CERAMIC (0.1UF/50V,Z,Y5V)	413-3113-035
POWER	C30		nsp	nsp	CER. CAP.	CERAMIC (0.1UF/50V,Z,Y5V)	413-3113-035
POWER	⚠C31		00D9587056002	00D9587056002	CER. CAP.	! SAFETY (0.01UF/250V,M,Y5V)	413-S250-747
POWER	⚠C32		00D9587056002	00D9587056002	CER. CAP.	! SAFETY (0.01UF/250V,M,Y5V)	413-S250-747
POWER	CN01		nsp	nsp	CONN.	2P 3.96 (8674-3N2,ANGLE,RED)	404-4001-2291
POWER	CN02		nsp	nsp	CONN.	2P SOCKET (P=3.96MMS)	404-BEAT6-1598
POWER	CN03		nsp	nsp	CONN.	5P SOCKET(P=3.75mm)	404-HV3363K-555
POWER	CN04		nsp	nsp	CONN.	4P SOCKET(CKM2501WV-4P 180°WHITE)	404-HV3500K-629A
POWER	⚠D01		90M-HE200400R	90M-HE200400R	DIODE	! BRIDGE (W04M,1.5A/200V)	414-QMX1-052
POWER	⚠D02		90M-HE200400R	90M-HE200400R	DIODE	! BRIDGE (W04M,1.5A/200V)	414-QMX1-052
POWER	⚠D03		90M-HE200400R	90M-HE200400R	DIODE	! BRIDGE (W04M,1.5A/200V)	414-QMX1-052
POWER	D05		00D9580018607	00D9580018607	DIODE	DIODE(1N4002/1N4002TA,1A/100V)	414-DV300-5014
POWER	D06		00MHD20002000	00MHD20002000	DIODE	1SS133-T77,300MW,40V,DO-34	414-3113-005
POWER	D09		00D9580018607	00D9580018607	DIODE	DIODE(1N4002/1N4002TA,1A/100V)	414-DV300-5014
POWER	D11		00MHD20002000	00MHD20002000	DIODE	1SS133-T77,300MW,40V,DO-34	414-3113-005
POWER	D12		00MHD20002000	00MHD20002000	DIODE	1SS133-T77,300MW,40V,DO-34	414-3113-005
POWER	D13		00MHD20002000	00MHD20002000	DIODE	1SS133-T77,300MW,40V,DO-34	414-3113-005
POWER	D14		00MHD20002000	00MHD20002000	DIODE	1SS133-T77,300MW,40V,DO-34	414-3113-005
POWER	FS01		nsp	nsp	JACK	CLIPS (FC-1206/WL-210A,15A)	420-KT350A-004
POWER	⚠FS01	FB	941652002310S	941652002310S	FUSE	FUSE(400mA/250V UL/VDE/CSA/S TS 20mm)	422-MX1824-045
POWER	⚠FS01	/N1B	90M-FS001390R	90M-FS001390R	FUSE	# FUSE T315mAL 250V EUR	422-280E2-043
POWER	FS01		nsp	nsp	COVER	FUSE COVER	504-DJ2500J-046
POWER	⚠FS01	U1B	90M-FS001400R	90M-FS001400R	FUSE	# FUSE T500mAL 250V JPN	422-KT350A-003
POWER	⚠FS02		941652002290S	941652002290S	FUSE	FUSE(375mA/125V)	422-4003-104
POWER	⚠FS03		941652002300S	941652002300S	FUSE	FUSE(750mA/125V)	422-4003-105
POWER	⚠FS04		941652002300S	941652002300S	FUSE	FUSE(750mA/125V)	422-4003-105
POWER	IC01		00MHC3690521F	00MHC3690521F	IC	IC (BA05T,3PIN)	417-CDN34A-314

NOTE : "nsp" PART IS LISTED FOR REFERENCE ONLY, MARANTZ WILL NOT SUPPLY THESE PARTS.

P.C.B. NAME	POS. NO.	VERS. COLOR	PART NO. (FOR EUR)	PART NO. (MZ)	PART NAME	DESCRIPTION	
POWER	IC02		00D9410045407	00D9410045407	IC	IC (BA08T 3PIN)	417-HMD5000-282
POWER	IC03		00MHC3890509F	00MHC3890509F	IC	IC 7805	417-KC730-123
POWER	IC04		00MHC36J3321F	00MHC36J3321F	IC	IC (BA033T/FP 3.3V TO220FP 3PIN)	417-HV3500K-253
POWER	IC05		00MHC3890809F	00MHC3890809F	IC	IC NJM7808	417-HTV8023KA-5006
POWER	IC06		00MHC3990809F	00MHC3990809F	IC	IC (NJM7908FA DIP TYPE)	417-DV300-182
POWER	L01		941115002240S	941115002240S	COIL	CHOKE COIL(AUT-2002V-G,DIP)	415-K800-294
POWER	Q05		941219001170S	941219001170S	TRS.	TRS. (2SB892T)	416-1360S-017A
POWER	Q06		00MBA10007210	00MBA10007210	TRS.	TRS. (DTA114ES)	416-HMA2200-080
POWER	Q07		90M-HT400500R	90M-HT400500R	TRS.	TRS. (2SD1207,MP)	416-1360S-016
POWER	Q08		00D9587057603	00D9587057603	TRS.	TRS. (2SC3330U-AC)	416-DJ1900-023
POWER	R01		nsp	nsp	RES.	CARBON(8.2K OHM J 1/4W T-52)	412-DV300-5124
POWER	R02		nsp	nsp	RES.	CARBON (4.7K OHM,1/6W,J,T-26)	412-3113-055
POWER	R03		nsp	nsp	RES.	CARBON (1K OHM,1/6W,J,T-26)	412-3113-078
POWER	R04		nsp	nsp	RES.	CARBON ((3.3K OHM,1/6W,J,T-26)	412-3113-057
POWER	R05		nsp	nsp	RES.	CARBON (100 OHM,1/6W,J,T-26)	412-3113-060
POWER	R06		nsp	nsp	RES.	CARBON (100 OHM,1/6W,J,T-26)	412-3113-060
POWER	R07		nsp	nsp	RES.	CARBON (220 OHM,1/6W,J,T-26)	412-3113-058
POWER	R08		nsp	nsp	RES.	CARBON (10K OHM,1/6W,J,T-26)	412-3113-068
POWER	⚠RLY01		90M-LY000420R	90M-LY000420R	RELAY	! RELAY	415-4001-276
POWER	⚠TX02	FB	nsp	941102002190S	TRANSF.	# TRANSFORMER (AC100V)	411-4003-762
POWER	⚠TX02	/N1B	941102002210S	941102002210S	TRANSF.	# TRANSFORMER (AC230V)	411-4003-764
POWER	⚠TX02	/U1B	nsp	941102002200S	TRANSF.	# TRANSFORMER (AC120V)	411-4003-763
POWER	W05		nsp	nsp	CORD	8P 2.0 CONN. WIRE (L=150MM)	404-4001-2283
POWER	W06		nsp	nsp	CORD	9P 2.0 CONN. WIRE (L=150MM)	404-4001-2284
POWER	ZD01		00D9410050900	00D9410050900	ZENER DIODE	ZENER DIODE(MTZJ24-C,1/2W,T-77)	414-390-218
POWER	ZD02		00MHD30681000	00MHD30681000	ZENER DIODE	ZENER DIODE (MTZJ6.8-C,1/2W,T-77)	414-KC720-016
POWER	ZD03		00MHD30561000	00MHD30561000	ZENER DIODE	ZENER DIODE (MTZJ5.6-B,1/2W,T-77)	414-HT8033-032
POWER			nsp	nsp	SUPPORT	HEXAGN PILLAR	200-4001-501
POWER			nsp	nsp	BRACKET	BRACKET (L TYPE)	300-HDJ7000-472
POWER			nsp	nsp	HEATSINK	HEAT SINK IC901	425-2002-001
POWER			nsp	nsp	SHEET	ISOLATION SHEET(PC)	501-4003-2255
POWER			nsp	nsp	RIVET	RIVET(MB-01H-N2W,H=10.3)	504-4003-257
					DSP PWB ASSY		
DSP	C200		nsp	00MDK98104300	CER. CAP.	CHIP (0.1UF/50V,Z TYPE,Y5V)	413-DCM280-773
DSP	C201		nsp	00MDK98104300	CER. CAP.	CHIP (0.1UF/50V,Z TYPE,Y5V)	413-DCM280-773
DSP	C202		nsp	00MDK98104300	CER. CAP.	CHIP (0.1UF/50V,Z TYPE,Y5V)	413-DCM280-773
DSP	C203		nsp	00MDK98104300	CER. CAP.	CHIP (0.1UF/50V,Z TYPE,Y5V)	413-DCM280-773
DSP	C204		nsp	00MDK98104300	CER. CAP.	CHIP (0.1UF/50V,Z TYPE,Y5V)	413-DCM280-773
DSP	C205		nsp	00MDK98104300	CER. CAP.	CHIP (0.1UF/50V,Z TYPE,Y5V)	413-DCM280-773
DSP	C206		nsp	00MDK98104300	CER. CAP.	CHIP (0.1UF/50V,Z TYPE,Y5V)	413-DCM280-773
DSP	C207		nsp	00MDK98104300	CER. CAP.	CHIP (0.1UF/50V,Z TYPE,Y5V)	413-DCM280-773
DSP	C208		nsp	00MDK98104300	CER. CAP.	CHIP (0.1UF/50V,Z TYPE,Y5V)	413-DCM280-773
DSP	C209		nsp	00MDK98104300	CER. CAP.	CHIP (0.1UF/50V,Z TYPE,Y5V)	413-DCM280-773
DSP	C210		nsp	00MDK98104300	CER. CAP.	CHIP (0.1UF/50V,Z TYPE,Y5V)	413-DCM280-773
DSP	C211		nsp	00MDK98104300	CER. CAP.	CHIP (0.1UF/50V,Z TYPE,Y5V)	413-DCM280-773
DSP	C212		nsp	00MDK98104300	CER. CAP.	CHIP (0.1UF/50V,Z TYPE,Y5V)	413-DCM280-773
DSP	C213		nsp	00MDK98104300	CER. CAP.	CHIP (0.1UF/50V,Z TYPE,Y5V)	413-DCM280-773
DSP	C214		nsp	00MDK98104300	CER. CAP.	CHIP (0.1UF/50V,Z TYPE,Y5V)	413-DCM280-773
DSP	C216		nsp	00MDK98104300	CER. CAP.	CHIP (0.1UF/50V,Z TYPE,Y5V)	413-DCM280-773
DSP	C217		nsp	00MEJ10701010	ELECT CAP.	100UF/10V,M,5*7,MINI	413-HMA2200-5017
DSP	C218		nsp	00MDK98104300	CER. CAP.	CHIP (0.1UF/50V,Z TYPE,Y5V)	413-DCM280-773
DSP	C219		nsp	00MDK98104300	CER. CAP.	CHIP (0.1UF/50V,Z TYPE,Y5V)	413-DCM280-773
DSP	C220		nsp	00MDK98104300	CER. CAP.	CHIP (0.1UF/50V,Z TYPE,Y5V)	413-DCM280-773
DSP	C222		nsp	00MEJ22701010	ELECT CAP.	220UF/10V,M,6*7,MINI	413-HT801K-192
DSP	C223		nsp	00MDK98104300	CER. CAP.	CHIP (0.1UF/50V,Z TYPE,Y5V)	413-DCM280-773
DSP	C225		nsp	00MDK98104300	CER. CAP.	CHIP (0.1UF/50V,Z TYPE,Y5V)	413-DCM280-773
DSP	C226		nsp	00MDK96103300	CER. CAP.	CHIP (0.01UF/50V,K TYPE,X7R)	413-DCM280-771
DSP	C227		nsp	00MDK98104300	CER. CAP.	CHIP (0.1UF/50V,Z TYPE,Y5V)	413-DCM280-773
DSP	C229		nsp	00MDK96103300	CER. CAP.	CHIP (0.01UF/50V,K TYPE,X7R)	413-DCM280-771
DSP	C230		nsp	00MDK98104300	CER. CAP.	CHIP (0.1UF/50V,Z TYPE,Y5V)	413-DCM280-773
DSP	C232		nsp	00MDK96103300	CER. CAP.	CHIP (0.01UF/50V,K TYPE,X7R)	413-DCM280-771
DSP	C233		nsp	00MDK98104300	CER. CAP.	CHIP (0.1UF/50V,Z TYPE,Y5V)	413-DCM280-773
DSP	C235		nsp	00MDK98104300	CER. CAP.	CHIP (0.1UF/50V,Z TYPE,Y5V)	413-DCM280-773
DSP	C236		nsp	00MDK98104300	CER. CAP.	CHIP (0.1UF/50V,Z TYPE,Y5V)	413-DCM280-773
DSP	C237		nsp	00MEJ10701010	ELECT CAP.	100UF/10V,M,5*7,MINI	413-HMA2200-5017
DSP	C238		nsp	nsp	CER. CAP.	CHIP (150pF/50V,J,TYPE,NPO)	413-900-931

NOTE : "nsp" PART IS LISTED FOR REFERENCE ONLY, MARANTZ WILL NOT SUPPLY THESE PARTS.

P.C.B. NAME	POS. NO.	VERS. COLOR	PART NO. (FOR EUR)	PART NO. (MZ)	PART NAME	DESCRIPTION	
DSP	C239		nsp	nsp	CER. CAP.	CHIP (39pF/50V,J,NPO)	413-390-987
DSP	CN106B		90M-YJ003050R	90M-YJ003050R	CONN.	14P 1.0 FFC CONN. (52207-1485)	404-EFX2-1860
DSP	CN107B		00D9410047706	00D9410047706	CONN.	SOCKET(30PIN)	404-385-2088
DSP	IC201		00D9410048909	00D9410048909	IC	IC (SCF5249LPV120,QFP TQ-144)	417-MCDS4-736
DSP	IC202		00D9410049005	00D9410049005	IC	IC (K4S641632E-TC,TSOP54)	417-CDN88-501
DSP	IC203		941243002390M	941243002390M	U-PRO	IC(M29W800B70N6.SMD)	704-4003-8510
DSP	IC204		00MHC98J18210	00MHC98J18210	IC	IC (BA18BC0FP-E2,SMD)	417-MCDS4-737
DSP	L201		00D9580016900	00D9580016900	FERRITE CORE	RH03506ST-B,65OHM/100MHZ	415-HV3500K-090
DSP	L202		00D9580016900	00D9580016900	FERRITE CORE	RH03506ST-B,65OHM/100MHZ	415-HV3500K-090
DSP	L203		941115002230S	941115002230S	COIL	INDUCTOR	415-4003-343
DSP	R201		nsp	00MNN05221610	CHIP RES.	CHIP (220 OHM,1/10W,J,TP 50V)	412-CDVD2001-521
DSP	R202		nsp	00MNN05472610	CHIP RES.	CHIP (4.7K OHM,1/10W,J,TP,50V)	412-CDVD2001-523
DSP	R203		nsp	00MNN05472610	CHIP RES.	CHIP (4.7K OHM,1/10W,J,TP,50V)	412-CDVD2001-523
DSP	R204		nsp	00MNN05221610	CHIP RES.	CHIP (220 OHM,1/10W,J,TP 50V)	412-CDVD2001-521
DSP	R205		nsp	00MNN05221610	CHIP RES.	CHIP (220 OHM,1/10W,J,TP 50V)	412-CDVD2001-521
DSP	R206		nsp	00MNN05221610	CHIP RES.	CHIP (220 OHM,1/10W,J,TP 50V)	412-CDVD2001-521
DSP	R207		nsp	nsp	CHIP RES.	CHIP (0 OHM,1/10W,J,TP,50V)	412-CDVD2001-552
DSP	R208		nsp	nsp	CHIP RES.	CHIP (0 OHM,1/10W,J,TP,50V)	412-CDVD2001-552
DSP	R210		nsp	00MNN05101610	CHIP RES.	CHIP(100 OHM,1/10W,J,TP,50V)	412-CDVD2001-530
DSP	R211		nsp	00MNN05101610	CHIP RES.	CHIP(100 OHM,1/10W,J,TP,50V)	412-CDVD2001-530
DSP	R213		nsp	00MNN05221610	CHIP RES.	CHIP (220 OHM,1/10W,J,TP 50V)	412-CDVD2001-521
DSP	R215		nsp	00MNN05472610	CHIP RES.	CHIP (4.7K OHM,1/10W,J,TP,50V)	412-CDVD2001-523
DSP	R216		nsp	00MNN05472610	CHIP RES.	CHIP (4.7K OHM,1/10W,J,TP,50V)	412-CDVD2001-523
DSP	R220		nsp	00MNN05101610	CHIP RES.	CHIP(100 OHM,1/10W,J,TP,50V)	412-CDVD2001-530
DSP	R221		nsp	00MNN05101610	CHIP RES.	CHIP(100 OHM,1/10W,J,TP,50V)	412-CDVD2001-530
DSP	R222		nsp	nsp	CHIP RES.	CHIP (0 OHM,1/10W,J,TP,50V)	412-CDVD2001-552
DSP	R223		nsp	nsp	CHIP RES.	CHIP (0 OHM,1/10W,J,TP,50V)	412-CDVD2001-552
DSP	R224		nsp	nsp	CHIP RES.	CHIP (0 OHM,1/10W,J,TP,50V)	412-CDVD2001-552
DSP	R225		nsp	nsp	CHIP RES.	CHIP (0 OHM,1/10W,J,TP,50V)	412-CDVD2001-552
DSP	R226		nsp	nsp	CHIP RES.	CHIP (0 OHM,1/10W,J,TP,50V)	412-CDVD2001-552
DSP	R227		nsp	nsp	CHIP RES.	CHIP (0 OHM,1/10W,J,TP,50V)	412-CDVD2001-552
DSP	R228		nsp	nsp	CHIP RES.	CHIP (0 OHM,1/10W,J,TP,50V)	412-CDVD2001-552
DSP	R231		nsp	00MNN05103610	CHIP RES.	CHIP (10K OHM,1/10W,J,TP,50V)	412-CDVD2001-534
					PHONE PWB ASSY		
PHONE	C303		nsp	00MEJ10701010	ELECT CAP.	100UF/10V,M,5*7,MINI	413-HMA2200-5017
PHONE	C304		nsp	00MEJ10701010	ELECT CAP.	100UF/10V,M,5*7,MINI	413-HMA2200-5017
PHONE	C305		nsp	00MDD95221300	CER. CAP.	CHIP (220PF/50V,TYPE NPO)	413-007USB-787
PHONE	C306		nsp	00MDD95221300	CER. CAP.	CHIP (220PF/50V,TYPE NPO)	413-007USB-787
PHONE	C307		nsp	00MDK96102300	CER. CAP.	CHIP (1000PF/50V,K TYPE,X7R)	413-DCM280-768
PHONE	C308		nsp	nsp	CER. CAP.	CHIP (1500PF/50V,K,TYPE,X7R)	413-DCM280-769
PHONE	C309		nsp	00MDK98104300	CER. CAP.	CHIP (0.1UF/50V,Z TYPE,Y5V)	413-DCM280-773
PHONE	C311		nsp	00MEJ47601610	ELECT CAP.	47UF/16V,M,5*7,SS	413-CDVD2001-265
PHONE	C312		nsp	00MEJ47601610	ELECT CAP.	47UF/16V,M,5*7,SS	413-CDVD2001-265
PHONE	C313		nsp	00MDK96103300	CER. CAP.	CHIP (0.01UF/50V,K TYPE,X7R)	413-DCM280-771
PHONE	C314		nsp	00MDK96102300	CER. CAP.	CHIP (1000PF/50V,K TYPE,X7R)	413-DCM280-768
PHONE	C319		nsp	00MEJ10602510	ELECT CAP.	10UF/25V,M,4*7,MINI	413-SPPW3-235
PHONE	C320		nsp	00MEJ10602510	ELECT CAP.	10UF/25V,M,4*7,MINI	413-SPPW3-235
PHONE	C321		nsp	00MDK96102300	CER. CAP.	CHIP (1000PF/50V,K TYPE,X7R)	413-DCM280-768
PHONE	C322		nsp	00MDK96102300	CER. CAP.	CHIP (1000PF/50V,K TYPE,X7R)	413-DCM280-768
PHONE	IC301		00MHC10016090	00MHC10016090	IC	IC (NJM4556AD)	417-3113-018
PHONE	JK301		00D9587060904	00D9587060904	TERMINAL	MIC JACK	420-HMJ1001-5034
PHONE	L301		00D9580016900	00D9580016900	FERRITE CORE	RH03506ST-B,65OHM/100MHZ	415-HV3500K-090
PHONE	L302		00D9580016900	00D9580016900	FERRITE CORE	RH03506ST-B,65OHM/100MHZ	415-HV3500K-090
PHONE	L303		00D9580016900	00D9580016900	FERRITE CORE	RH03506ST-B,65OHM/100MHZ	415-HV3500K-090
PHONE	Q301		00D9410046406	00D9410046406	TRS.	TRS. (2SC4695-TB-E,SOT23/CP)	416-DAIA-273
PHONE	Q302		00D9410046406	00D9410046406	TRS.	TRS. (2SC4695-TB-E,SOT23/CP)	416-DAIA-273
PHONE	Q303		00D9410046406	00D9410046406	TRS.	TRS. (2SC4695-TB-E,SOT23/CP)	416-DAIA-273
PHONE	Q304		00D9410046406	00D9410046406	TRS.	TRS. (2SC4695-TB-E,SOT23/CP)	416-DAIA-273
PHONE	R301		nsp	00MNN05223610	CHIP RES.	CHIP (22K OHM,1/10W,J,TP,50V)	412-007USB-704
PHONE	R302		nsp	nsp		CARBON(22K OHM,1/6W,J,T-26)	412-3113-059
PHONE	R303		nsp	00MNN05123610	CHIP RES.	CHIP (12K OHM,1/10W,J,TP,50V)	412-007USB-702
PHONE	R304		nsp	00MNN05123610	CHIP RES.	CHIP (12K OHM,1/10W,J,TP,50V)	412-007USB-702
PHONE	R305		nsp	00MNN05153610	CHIP RES.	CHIP (15K OHM,1/10W,J,TP,50V)	412-007USB-687
PHONE	R306		nsp	00MNN05153610	CHIP RES.	CHIP (15K OHM,1/10W,J,TP,50V)	412-007USB-687
PHONE	R307		nsp	00MNN05680610	CHIP RES.	CHIP (68OHM,1/10W,J,TP,50V)	412-900-1016
PHONE	R308		nsp	00MNN05680610	CHIP RES.	CHIP (68OHM,1/10W,J,TP,50V)	412-900-1016

NOTE : "nsp" PART IS LISTED FOR REFERENCE ONLY, MARANTZ WILL NOT SUPPLY THESE PARTS.

P.C.B. NAME	POS. NO.	VERS. COLOR	PART NO. (FOR EUR)	PART NO. (MZ)	PART NAME	DESCRIPTION	
PHONE	R309		nsp	00MNN05102610	CHIP RES.	CHIP (1K OHM,1/10W,J,TP,50V)	412-CDVD2001-540
PHONE	R310		nsp	00MNN05102610	CHIP RES.	CHIP (1K OHM,1/10W,J,TP,50V)	412-CDVD2001-540
PHONE	R311		nsp	00MNN05472610	CHIP RES.	CHIP (4.7K OHM,1/10W,J,TP,50V)	412-CDVD2001-523
PHONE	R312		nsp	00MNN05472610	CHIP RES.	CHIP (4.7K OHM,1/10W,J,TP,50V)	412-CDVD2001-523
PHONE	R313		nsp	nsp	RES.	CARBON (4.7K OHM,1/6W,J,T-26)	412-3113-055
PHONE	R314		nsp	00MNN05472610	CHIP RES.	CHIP (4.7K OHM,1/10W,J,TP,50V)	412-CDVD2001-523
PHONE	R315		nsp	00MNN05104610	CHIP RES.	CHIP (100K OHM,1/10W,J,TP,50V)	412-CDVD2001-537
PHONE	R316		nsp	00MNN05104610	CHIP RES.	CHIP (100K OHM,1/10W,J,TP,50V)	412-CDVD2001-537
PHONE	R317		nsp	00MNN05680610	CHIP RES.	CHIP (68OHM,1/10W,J,TP,50V)	412-900-1016
PHONE	R318		nsp	00MNN05680610	CHIP RES.	CHIP (68OHM,1/10W,J,TP,50V)	412-900-1016
PHONE	R319		nsp	00MNN05220610	CHIP RES.	CHIP (22 OHM,1/10W,F,TP,50V)	412-CDVD2001-554
PHONE	R320		nsp	00MNN05220610	CHIP RES.	CHIP (22 OHM,1/10W,F,TP,50V)	412-CDVD2001-554
PHONE	VR301		941679002500S	941679002500S	VR	VR(10KA,RD902F-20-125F-A10K-00DH2)	418-4003-560
PHONE	W301		nsp	nsp	CONN.	7P 2.0 CONN. WIRE (L=520mm,90°)	404-4003-3244
PHONE			nsp	nsp	BRACKET	BRACKET (L TYPE)	300-K1000-472B
					REPEAT PWB ASSY		
REPEAT	SW405		00D9580018306	00D9580018306	SW	TACT SW (H=5MM)	403-DCM270X-101A
REPEAT	SW406		00D9580018306	00D9580018306	SW	TACT SW (H=5MM)	403-DCM270X-101A
REPEAT	SW407		00D9580018306	00D9580018306	SW	TACT SW (H=5MM)	403-DCM270X-101A
REPEAT	SW408		00D9580018306	00D9580018306	SW	TACT SW (H=5MM)	403-DCM270X-101A
REPEAT	W02		nsp	nsp	CONN.	5P 2.0 CONN. WIRE (L=160mm)	404-4003-3242
					POWER SW PWB ASSY		
POWER	D401		90M-HI101170R	90M-HI101170R	L.E.D.	LED (RED,LTL-16KE,3)	410-CD6000-122
POWER	Q401		00D9587057409	00D9587057409	CHIP TRS.	CHIP TRS. (2SC2412KT146R)	416-CDN88-051
POWER	R402		nsp	nsp	CHIP RES.	CHIP (1.5K OHM,1/10W,J,TP ,50V)	412-CDVD2001-550
POWER	R404		nsp	nsp	CER. CAP.	CHIP (2.2K OHM,1/10W,J,TP ,50V)	412-007USB-693
POWER	SW413		00D9580018306	00D9580018306	SW	TACT SW (H=5MM)	403-DCM270X-101A
POWER	W101		nsp	nsp	CONN.	5P 2.0 CONN. WIRE (L=100mm)	404-4003-3243
					PHOTO TRANSISTOR PWB ASSY		
PH TRS.	Q01		00D9580018209	00D9580018209	PHOTO UNIT	PHOTO TRS. (LTR-301)	416-DCM270X-120
					INFERARED EMITTING PWB ASSY		
INFRA	D01		00D9580018403	00D9580018403	PHOTO UNIT	INFRARED EMITTING (LTE-4206C)	410-DCM270X-132
INFRA	R01		nsp	nsp	RES.	CARBON (1K OHM,1/6W,J,T-26)	412-3113-078
INFRA			nsp	nsp	SPACER	ROUND PLASTIC SPACER (302A)	605-DCM270-055

NOTE : "nsp" PART IS LISTED FOR REFERENCE ONLY, MARANTZ WILL NOT SUPPLY THESE PARTS.

15. ABOUT REPLACE THE MICROPROCESSOR WITH A NEW ONE

When replaced of the U-PRO (Microprocessor) or the Flash ROM, confirm contents of the following.

PWB Name	Pos. No.	Description	After replaced	Remark
SERVO	IC110	SM8952AC25J	**A**	
DSP	IC203	M29W800B70N6	**B**	

After replaced

A : Mask ROM (With software). No need write-in of software to the microprocessor.

B : Flash ROM (With software). Usually, no need write-in of software. But, when the software was updated, you should be write-in of the new software to the microprocessor or flash ROM. Please check the software version.

C : Empty Flash ROM (Without software). You should be write-in of the software to the microprocessor or flash ROM. Refer to "Update procedure" or "writing procedure", when you should be write-in the software.

マイコン等を交換した場合の対応について

U-PRO(マイコン)およびFlash ROM等を交換した場合の対応方法を下記の記載します。

PWB Name	Pos. No.	Description	交換時の対応	備考
SERVO	IC110	SM8952AC25J	**A**	
DSP	IC203	M29W800B70N6	**B**	

交換時の対応

A : Mask ROM (ソフトウェア書き込み済み)　交換時にソフトウェアの書き込みは必要ありません。

B : Flash ROM (ソフトウェア書き込み済み)　バージョンアップにより交換時にソフトウェアの書き換えが必要な場合があります。バージョンの確認をしてください。

C : 空ROM (Flash ROM) 交換時必ずソフトウェアの書き込みが必要になります。Update、書き込み方法を参照してください。