marantz

SCHE

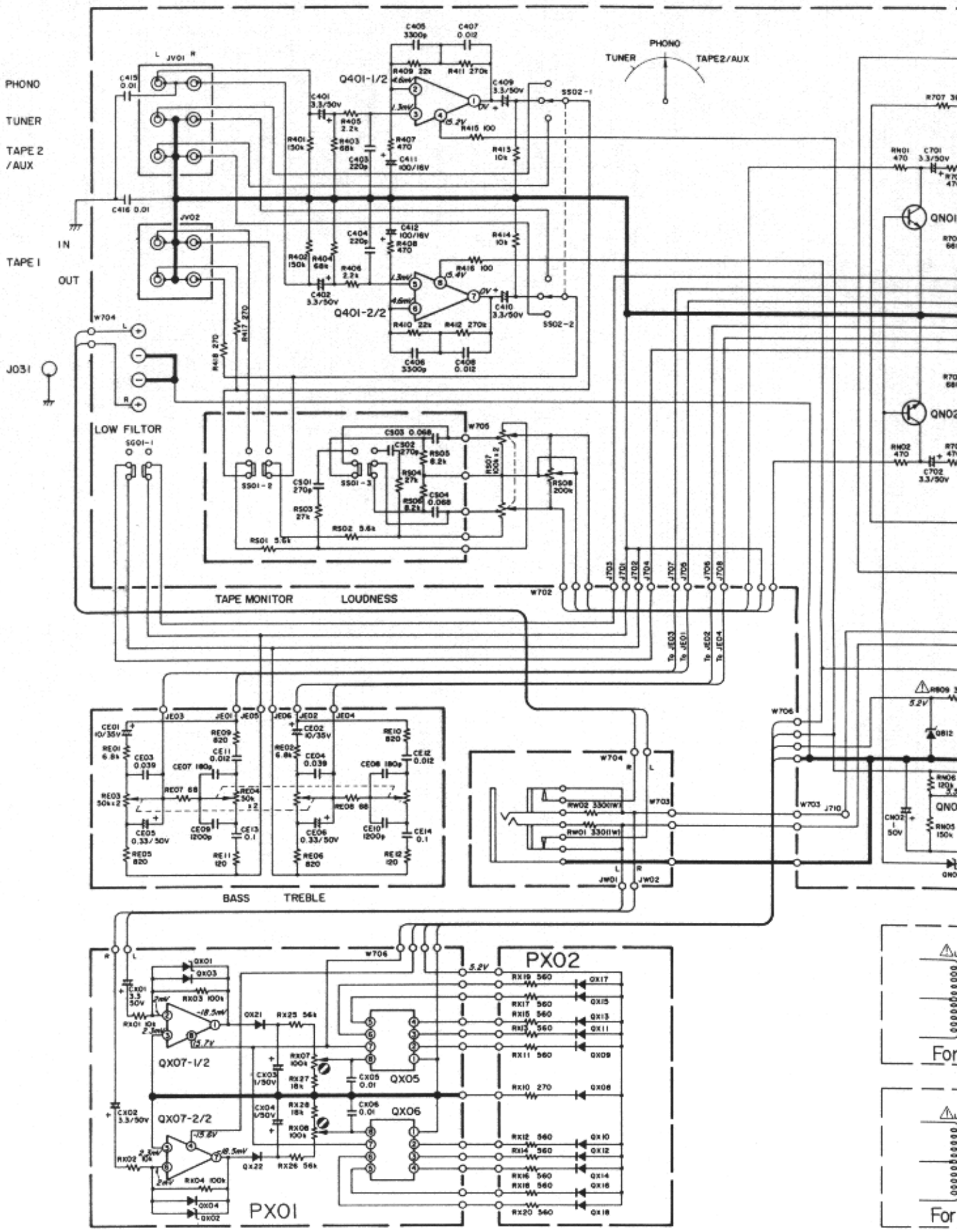

Note on safety: The parts marked with ⚠ are important parts on the safety. Please use the parts having the designated parts number without fail.

Components and wiring are subje

CHEMATIC DIAGRAM FOR Model PM310/A315

Q401-1/2, Q401-2/2
4558D

Q701~Q704
2SA750

Q705, Q706
1S2471

Q707, Q708
2SC1400

Q709, Q710, Q721, Q722
QN01, QN02, QN04
2SC945

Q711, Q712
2SC2240

Q713~Q720
1S1555

Q723, Q724, Q808, QN05
2SA733

Q725, Q726
2SC2274

Q727, Q728
2SA984

Q729, Q730
2SD613

Q731, Q732
2SB633

Q801
S4VB20

Q805, Q811, QN03
DS135D

Q806, Q809, Q810
HZ16L

Q807
2SD571

Q812
BZ052

QN06
WZ071

QX01, QX02
WZ038

QX03, QX04, QX21, QX22,
1S1555

QX05, QX06
TL489C

QX07-1/2, QX07-2/2
AN6552-1/2

QX08
GL-9NG9

QX09~QX18
GL-9PR9

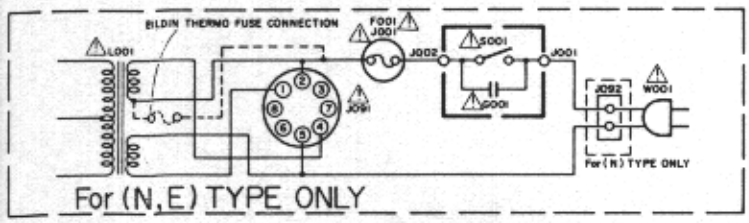

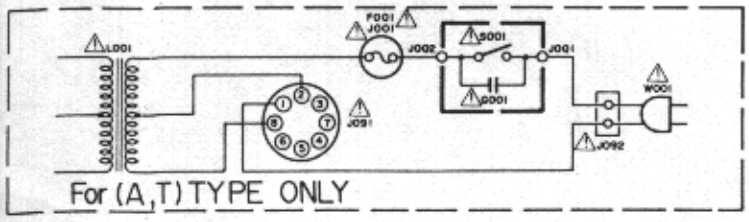

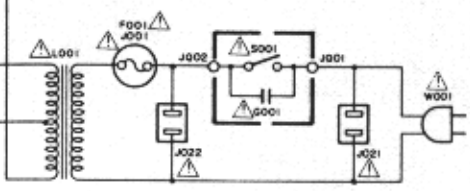

For U.S.A. TYPE ONLY

www.rtvcenter.com
repairtips, servicemanuals
forum, chassispictures. . .