SERVICE MANUAL

TA135AV/TA170AV

marantz®

model TA135AV/TA170AV

Stereo System Component

MARANTZ DESIGN AND SERVICE

Using superior design and selected high grade components, MARANTZ company has created the ultimate in stereo sound. Only **original MARANTZ parts** can insure that your MARANTZ product will continue to perform to the specifications for which it is famous.

Parts for your MARANTZ equipment are generally available to our National Marantz Subsidiary or Agent.

ORDERING PARTS:
Parts can be ordered either by mail or by telex. In both cases, MARANTZ part number has to be specified. If you order by mail, fulfil MARANTZ order forms.

MARANTZ S.A.
EUROPEAN PARTS DEPARTMENT
2, Avenue Léopold III
B-7120 PERONNES-lez-BINCHE
BELGIUM
TWX: 57589 SEPLT B

MARANTZ NATIONAL PARTS DEPARTMENT
20525 Nordhoff Street
Chatsworth, California 91311
Phone: 1-800-423-5108
Phone: 1-213-998-9333

The following information must be supplied to eliminate delays in processing your order:

1. Complete address
2. Complete part numbers and quantities required
3. Description of parts
4. Model number for which part is required
5. Way of shipment
6. Signature: any order form or telex must be signed otherwise such part order will be considered as null and void.

PARTS ORDERING:
Parts may be ordered from the following addresses:

EUROPE

MARANTZ S.A.
European Parts Department
2, Avenue Léopold III
B-7120 Péronnes-lez-Binche
Belgium
Telex: 57589

MARANTZ FRANCE
4 Rue Bernard Palissy
92600 Asnières
France
Telex: 611651

MARANTZ DENMARK
Bregnerødvej 132b
3460 Birkerød
Denmark
Telex: 39137

MARANTZ AUSTRIA Ge.M.B.H.
25 Franz Lisztgasse
2380 Perchtoldsdorf
Austria
Telex: 113583

MARANTZ EUROPE S.A.
326 Avenue Louise Bte 32
1050 Brussels
Belgium
Telex: 26602

MARANTZ SVENSKA A.B.
Aldermansvägen 10-21
Box 1240
171 24 Solna
Sweden
Telex: 13449

MARANTZ BELGIUM
45 Rue Auguste Van Zande
1080 Brussels
Belgium

MARANTZ TRADING S.A.
326 Avenue Louise Bte 32
1050 Brussels
Belgium

MARANTZ
De Limiet 3
4131 N.R. Vianen
The Netherlands

MARANTZ ITALIANA S.p.A.
Via Montenapoleone 10
20121 Milano
Italia

MARANTZ AUDIO U.K. LTD.
Unit 15/16
Saxon Way Industrial Estate
Moor Lane
Harmondsworth UB7 OLW
Great Britain
Telex: 935196

MARANTZ GERMANY G.M.B.H.
Max-Planck-Straße 22
6072 Dreieich 1
Germany
Telex: 4185316

AL ALAMIAH ELECTRONICS
Ussama Building
Fahd Saleem Street
P.O. Box 23781
Safat-Kuweit

AL ALAMIAH ELECTRONICS
P.O. Box 5954
University Street
Riyadh 11432
Saudi Arabia

AUSTRALIA

MARANTZ AUSTRALIA PTY., LTD.
19 Chard Road
Brookvale, NSW 2100
Australia
Telex: 24121

U.S.A.

MARANTZ COMPANY, INC.
National Service Dept.
P.O. Box 577
Chatsworth, CA 91311
U.S.A.
Telex: 4720284

JAPAN

MARANTZ JAPAN, INC.
35-1, 7-chome, Sagamiono
Sagamihara-shi, Kanagawa
Japan
Telex: 22878

All of the above locations are fully equipped to take care of your total service needs. Because various countries have differing configuration requirements, it is necessary that you contact the service facility in your particular country. In the event that there is no service location listed for your country, please, contact the nearest facility for the necessary assistance.

> In case of difficulties, do not hesitate to contact the Technical Department at abovementioned address.

NOTE—FOR U.S.A. ONLY
Parts for your MARANTZ stereo are generally available within 72 hours throughout the nation via a toll-free line to our National Parts Depot in California. The sales professionals who take your call immediately refer to their own desk top computer terminal and can quickly determine the availability and price information you require. If, for some reason, your order should exceed our available stock, we usually can instantly provide an alternate replacement part or current delivery information. When the order is placed and confirmed, the computer simultaneously generates "hard copy" orders at the distribution center. As hard copies come directly from the computer to the national parts depot, your requested stock is assembled and prepared for shipment and placed on the first available carrier for delivery to you.

Phone orders will eliminate mail delays, and we encourage the use of this method. If you order by mail, use MARANTZ parts order forms which are available from MARANTZ NATIONAL PARTS DEPARTMENT.

marantz®

TABLE OF CONTENTS

SECTION		PAGE
1.	SHOCK, FIRE HAZARD SERVICE TEST	1
2.	P.W. BOARDS	1
3.	TEST EQUIPMENT REQUIRED FOR SERVICING	2
4.	TUNER ALIGNMENT PROCEDURES	2
5.	TEST AND ALIGNMENT POINTS	4
6.	CIRCUIT DESCRIPTION	5
7.	BLOCK DIAGRAM	9
8.	COMPONENT LOCATIONS	10
8.1	Tuner Preset Assembly (PC04) Component Locations	10
8.2	Power Meter, Function Indicator Assembly (PX54) Component Locations	11
8.3	Volume Indicator Assembly (PG84) Component Locations	11
8.4	Main Amp/Power Supply Assembly (P704) Component Locations	12
8.5	Loudness. Monitor Switch Assembly (PG54) Component Locations	13
8.6	Signal Meter Assembly (PX04) Component Locations	13
8.7	Video Buffer Assembly (PL04) Component Locations	13
8.8	Speaker Switch, Headphone Jack Assembly (PT04) Component Locations	13
8.9	Power Switch Assembly (PP04) Component Locations	14
8.10	CD Remocon Output Assembly (PQ74) Component Locations	14
8.11	Remot Pause Out Assembly (PW04) Component Locations	14
8.12	VCR, LV Assembly (PS14) Component Locations	14
8.13	Tuner Assembly (P104) Component Locations	14
8.14	Tuner Logic Control Assembly (PR04) Component Locations	15
8.15	Audio Logic Control Assembly (PU54) Component Locations	15
8.16	Back Up Power Supply Assembly (P854) Component Locations	15
8.17	G. Equalizer Assembly (PE04) Component Locations	16
8.18	Pre Out/Main In Assembly (PW54) Component Locations	16
8.19	RCA Pin, Phone Function, Elect Volume Assembly (PS04) Component Locations	16
9.	EXPLODED VIEW AND PARTS LIST	17
10.	ELECTRICAL PARTS LIST	19
11.	TECHNICAL SPECIFICATIONS	25
12.	SCHEMATIC DIAGRAM	26

How to use this service manual

- The "Common parts" which Marantz Japan, Inc. has established are eliminated from this service manual.
- These "Common parts" are applied to all models in the service manuals arranged and issued by MJI.
- To indicate clearly the common parts in the schematic diagram, a line is drawn above or under the Ref. Desig. No. of applicable parts.
- "Common parts" can be supplied from the Marantz service center as ever.
  In case of ordering, please establish the parts number of 10 figures following the procedure mentioned in this service manual "How to establish the parts number for common parts".

(NOTE)

When you order parts to the Marantz parts center, please take notice of the following points.

1) Please correctly write the parts number of 10 figures following the rule.
2) Since ordering parts by the Ref. Desig. No. or ratings indicated in the schematic diagram does not satisfy the above conditions, the Marantz parts supply system does not work properly.
   As this case is apt to cause a trouble, please pay attention to it.

MARANTZ MODEL TA135AV/TA170AV STEREO SYSTEM COMPONENT

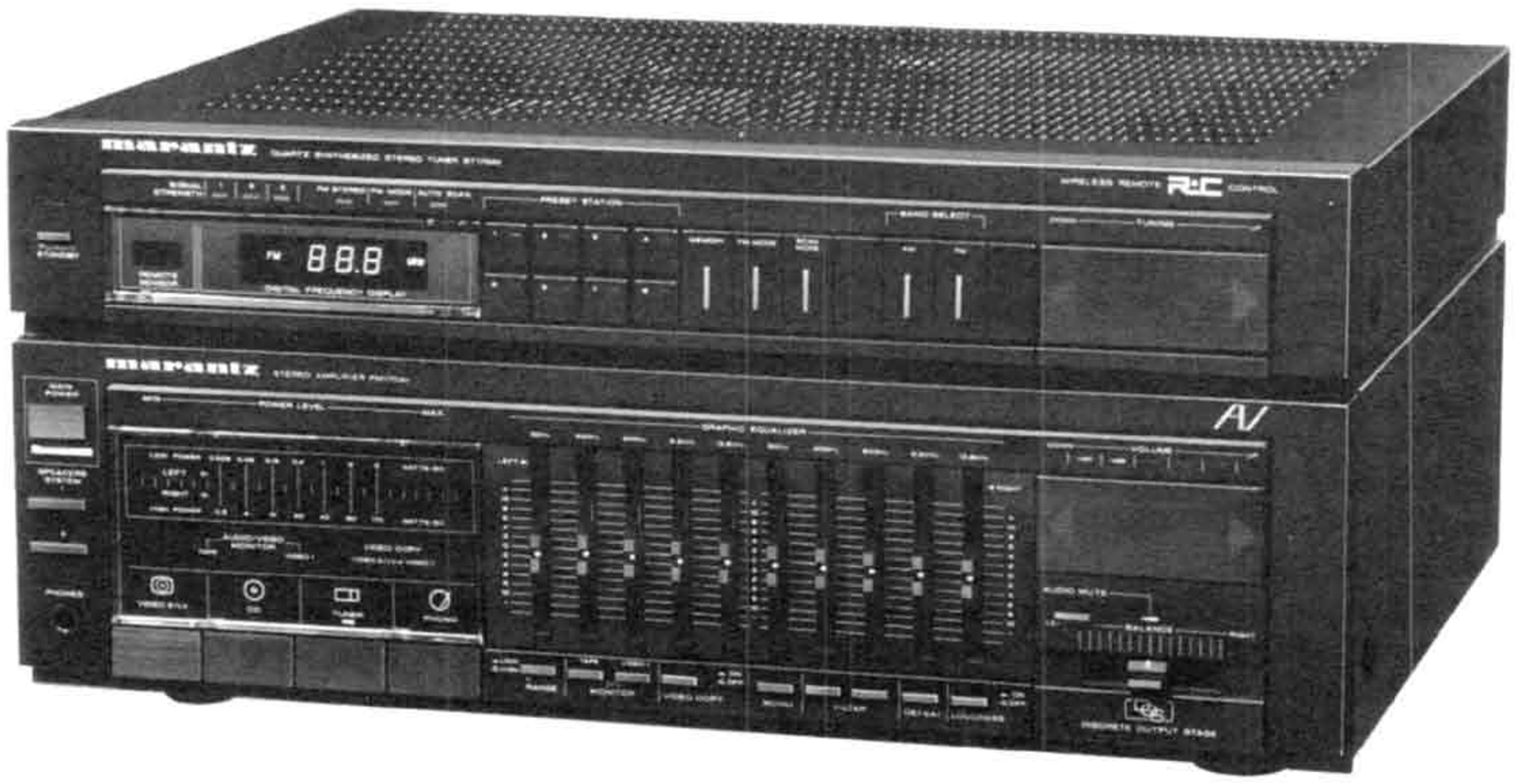

CAUTION

This service manual explains them by extracting the different specifications from those of the TA110/TA150, based on the TA110/TA150. For both electrical and mechanical information on the after-sales service which is not stated, all information is described in the TA110/TA150 service manual. The dispatch of the parts for after-sales service has to be referred to this service manual, with the first priority. For this reason, please use this service manual with referring to the TA110/TA150 service manual, without fail.

1. SHOCK, FIRE HAZARD SERVICE TEST

CAUTION: After servicing this appliance and prior to returning to customer, measure the resistance between either primary AC cord connector pins (with unit NOT connected to AC mains and its Power switch ON), and the face or Front Panel of product and controls and chassis bottom.

Any resistance measurement less than 1 Megohms should cause unit to be repaired or corrected before AC power is applied, and verified before return to user/customer.

Ref. UL Standard No. 1270. Para. 66. 3. D (Mandatory Test after servicing Electrical Appliances, effective 7-1-83).

2. P.W. BOARDS

As can be seen from the circuit diagram the chassis of Model TA135AV/TA170AV consists of the following unit. Each unit mounted on a printed circuit board is described within the square enclosed by a bold dotted line on the circuit diagram.

1. **Tuner . . . . . mounted on P.W. Board P104**
2. **Main Amp/ Power Supply . . . . . mounted on P.W. Board P704**
3. **Back Up Power Supply . . . . . mounted on P.W. Board P854**
4. **Tuner Preset . . . . . mounted on P.W. Board PC04**
5. **G. Equalizer . . . . . mounted on P.W. Board PE04**
6. **Loudness Monitor Switch . . . . mounted on P.W. Board PG54**
7. **Volume Indicator . . . mounted on P.W. Board PG84**
8. **Video Buffer . . . . . mounted on P.W. Board PL04**
9. **Power Switch . . . . . mounted on P.W. Board PP04**
10. **CD Remocon Output mounted on P.W. Board PQ74**
11. **Tuner Logic Control . mounted on P.W. Board PR04**
12. **RCA Pin, Phone Function Elect Volume . . . . . mounted on P.W. Board PS04**
13. **VCR LV . . . . . mounted on P.W. Board PS14**
14. **Speaker Switch, Headphone Jack . . . . mounted on P.W. Board PT04**
15. **Audio Logic Control . mounted on P.W. Board PU54**
16. **Remot Pause Out . . . mounted on P.W. Board PW04**
17. **Pre Out/Main In . . . . mounted on P.W. Board PW54**
18. **Signal Meter . . . . . mounted on P.W. Board PX04**
19. **Power Meter, Function Indicator . . mounted on P.W. Board PX54**

3. TEST EQUIPMENT REQUIRED FOR SERVICING

This table lists the test equipment required for servicing the Model TA135AV/TA170AV Stereo System Component.

Item	Use
AM Signal Generator	Signal source for AM alignment
Test Loop	Use with AM Signal Generator
FM Signal Generator	Signal sorce for FM alignment
MPX Signal Generator	Stereo separation alignment and trouble shooting
Distortion Analyzer	Distortion measurements
Audio Oscillator	Sinewave and squarewave signal source
AC VTVM	Voltage measurements (AC)
Oscilloscope	Waveform analysis trouble shooting
Frequency Counter	MPX Oscillator adjustment (VCO)
Circuit Tester	Trouble shooting
DC VTVM	Voltage measurements (DC)
AC Wattmeter	Monitors primary power to tuner
Line Voltmeter	Monitors potential of primary power to tuner
Variable Autotransformer	Adjusts level of primary power to tuner
Shorting Plug	Shorts amplifier Input to eliminate nois pickup

4. TUNER ALIGNMENT PROCEDURES

A dummy resistor of 47 kohms must be connected across the tuner output terminals before alignment.

4.1 FM Alignment Procedures (Function switch in the "FM" position, MODE switch in the MONO position.)

1. FM RF Alignment

Step	Signal Source Connection	Signal Frequency	Indicator Connection	Set the Digital Readout Frequency	Adjust:
1	FM signal generator to FM antenna terminal (300Ω) through matching network Set the SG RF output level so that some noise can be observed on the upper and lower side of the output waveform.	98.00 MHz	VTVM to L or R channel output Tape out (JS02)	98.00 MHz	FRONT END IFT (A101: L8) for maximum output and minimum distortion.
2	FM signal generator 1 mV output to FM antenna terminal (300Ω) through matching network Modulation Level IHF 75 kHz DEV.	98.00 MHz	"O" center meter or DC current meter in 100 μA range between (J201,–J202)	98.00 MHz	L201 (Primary) core so that the meter indicates its center or may read "O".
3	FM signal generator 1 mV output to FM antenna terminal (300Ω) through matching network.	98.00 MHz	Distortion meter to L or R channel output Tape out (JS02)	98.00 MHz	L201 (Secondary) core for minimum distortion.

4.2 Muting Level Alignment (Function switch in the "FM" position, MODE switch in the "AUTO STEREO" position.)

Step	Signal Source Connection	Signal Frequency	Indicator Connection	Set the Digital Readout Frequency	Adjust:
1	FM signal generator 12.5 μV output to FM antenna terminal through matching network (300 ohm, balanced)	98.00 MHz	VTVM to L or R channel output Tape out (JS02)	98.00 MHz	Adjust R215 until output is developed.

4.3 Multiplex Alignment Procedures (Function switch in the "FM" position, MODE switch in the "AUTO STEREO" position.)

Step	Signal Source Connection	Signal Frequency	Indicator Connection	Set the Digital Readout Frequency	Adjust:
1	FM signal generator 1 mV output modulated by MPX signal generator to FM antenna terminal (300Ω) through matching network Modulation Level IHF 67.5kHz+9% Pilot DEV.	No modulation	Frequency counter to (J301–J302)	98.00 MHz	R303 so that Frequency may precisely read 19,000 kHz ±10 Hz.
2		Stereo left (1,000 Hz)	VTVM to right channel output (JS02. R ch)		R317 for same separation in both channels.
3		Stereo right (1,000 Hz)	VTVM to left channel output (JS02. L ch)		

4.4 AM Alignment Procedures (Function switch in the "AM" position.)

1. AM IF Alignment

Step	Signal Source Connection	Signal Frequency	Indicator Connection	Set the Digital Readout Frequency	Adjust:
1	Sweep generator to AM Antenna Terminal.	450 kHz marker	Oscilloscope to (RA27)	———	LA05 for maximum and symmetric response.

AM RF Alignment

Step	Signal Source Connection	Signal Frequency	Indicator Connection	Set the Digital Readout Frequency	Adjust:
1	Apply the signal to the AM loop antenna from the AM signal generator using the test loop.	600 kHz	VTVM to L or R channel output Tape out (JS02)	600 kHz	LA01 for maximum output.
2		1,400 kHz		1,400 kHz	CA02 for maximum output.
3	Repeat steps 1 and 2.				

AM Signal Alignment (Function switch in the "AM" position)

Step	Signal Source Connection	Signal Frequency	Indicator Connection	Set the Digital Readout Frequency	Adjust:
1	Apply a signal to the AM loop antenna from the RF generator via the test test loop. 5 mV signal	1,000 kHz	———	1,000 kHz	Adjust RA24 so that 3 signal LEDs light. (DX01, DX02, DX03)

4.5 Audio adjustment

1. Idling adjustment
   a) Connect a digital voltmeter between TP1 and TP3.
   b) Adjust to 8 mV by R717.
   c) In the same manner, adjust R CH using TP2, TP3, and R718.

   Note 1: Adjustment is made with no signal.
   2: Adjustment is made after a heat run of one minute after the power is turned on.

2. Power Meter adjustment
   a) Set the output to 8 ohm, 1 kHz, 170 W (135 W for TA135AV).
   b) Adjust RX89 and RX90 until the 7 th power meter LED is illuminated.
   c) Set the meter length to low and confirm it is within the specifications.

5. TEST AND ALIGNMENT POINTS

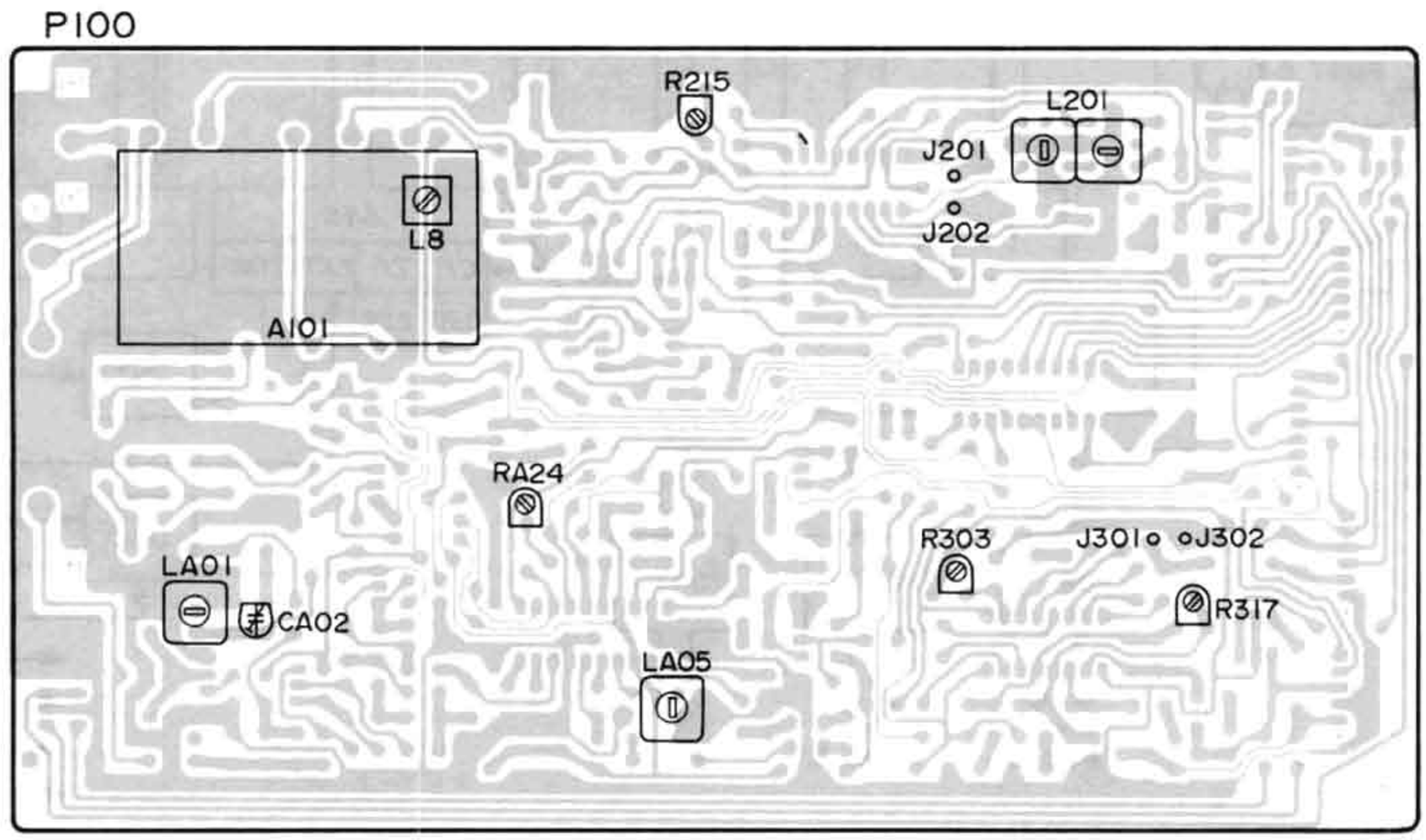

6. CIRCUIT DESCRIPTION

SINGLE-CHIP 4-BIT MICROCOMPUTER LC6502C (QR01)

BLOCK DIAGRAM

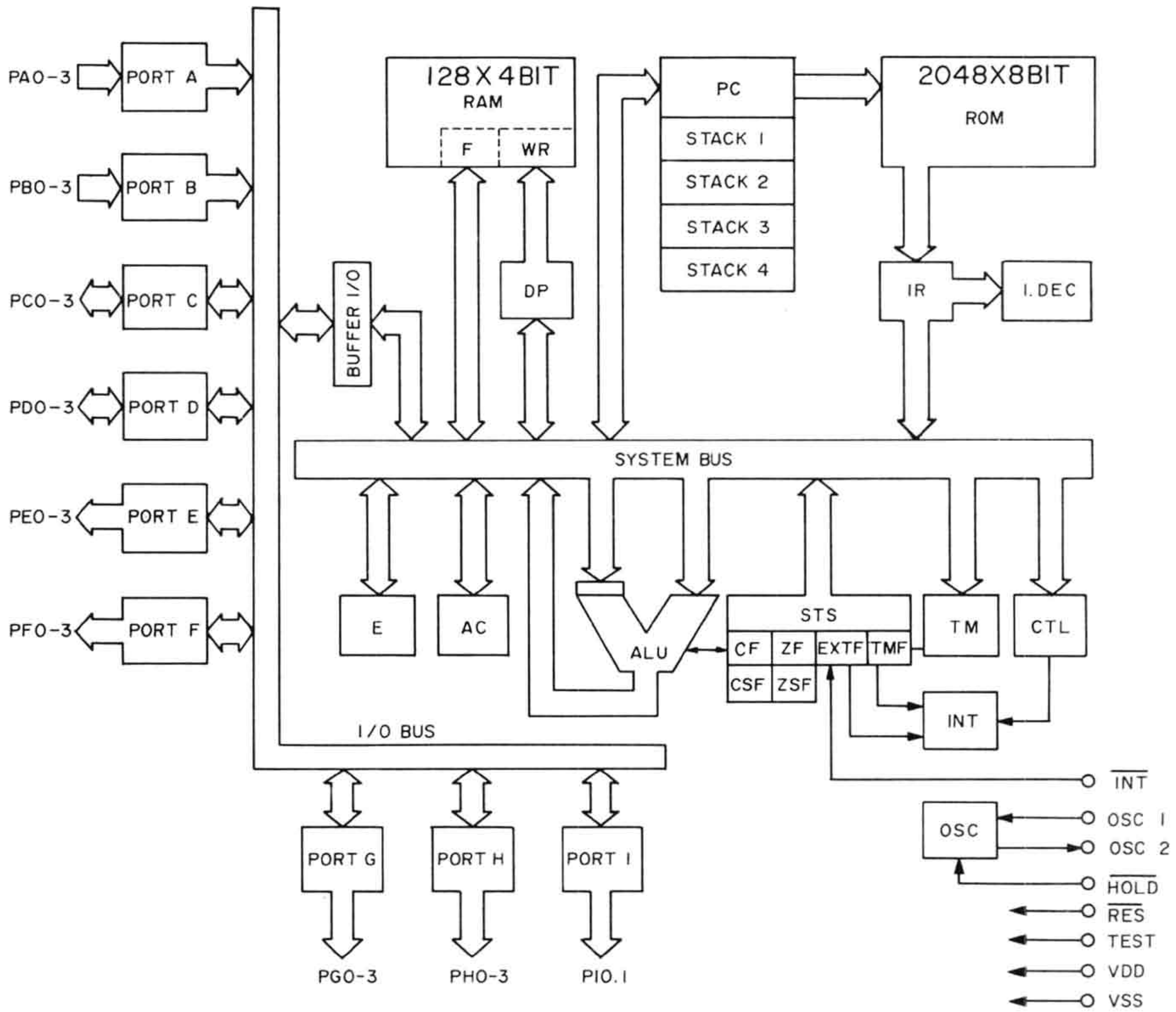

RAM:	data memory	ROM:	program memory
F:	flag	PC:	program counter
WR:	working register	INT:	interrupt control
AC:	accumulator	IR:	instruction register
ALU:	logic calculation unit	I. DEC:	instruction decoder
DP:	data pointer	CF, CSF:	carry flag, carry save flag
E:	E register	ZF, ZSF:	zero flag, zero save flag
CTL:	control register	EXTF:	external interrupt request flag
OSC:	oscillator circuit	TMF.	internal interrupt request flag
TM:	timer		
STS:	status register		

Terminal Connections

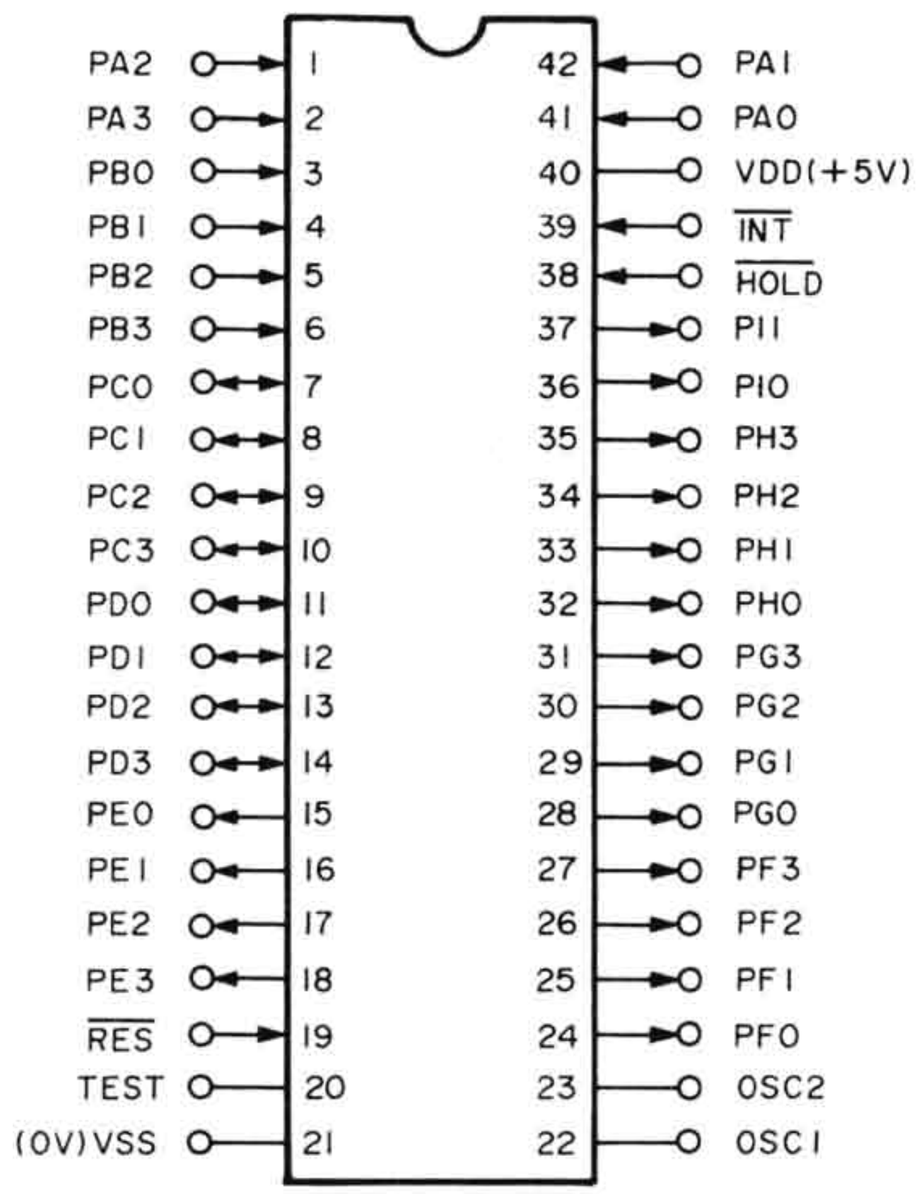

Terminal Function

Terminal Name	I/O	Function
$\overline{INT}$	Input	Pseudo interrupt request input terminal.
$\overline{HOLD}$	Input	Hold mode request input terminal.
$\overline{RES}$	Input	Reset input terminal.
$PA_{3\text{-}0}$	Input	Input ports A_3 to A_0 In input mode, 4-bit input and bit test are allowed. Used for HALT mode release and request input.
$PB_{3\text{-}0}$	Input	Input ports B_3 to B_0 In input mode, 4-bit input and bit test are allowed.
$PC_{3\text{-}0}$	I/O	I/O ports C_3 to C_0 In input mode, 4-bit input and bit test are allowed. In output mode, 4-bit output, bit set/reset output are allowed.
$PD_{3\text{-}0}$	I/O	I/O ports D_3 to D_0 In input mode, 4-bit input and bit test are allowed. In output mode, 4-bit output, bit set/reset output are allowed.
$PE_{3\text{-}0}$	Output	Output ports E_3 to E_0 4-bit output and bit set/reset are allowed. Input of output latch contents in 4-bit units and testing of output latch of bit is possible.
$PF_{3\text{-}0}$	Output	Output ports F_3 to F_0 4-bit output and bit set/reset are allowed. Input of output latch contents in 4-bit units and testing of output latch of bit is possible.
$PG_{3\text{-}0}$	Output	Output port G_3 to G_0 4-bit output and bit set/reset are allowed. Input of output latch contents in 4-bit units and testing of output latch of bit is possible.
$PH_{3\text{-}0}$	Output	Output ports H_3 to H_0 4-bit output and bit set/reset are allowed. Input of output latch contents in 4-bit units and testing of output latch of bit is possible.
$PI_{0,1}$	Output	Output ports $I_{0,1}$ 2-bit output and bit set/reset are allowed. Input of output latch contents in 4-bit units and testing of output latch of bit is possible.
OSC1	Input	Terminal operated with clock signal externally supplied. A ceramic resonatoe and CR are connected to the space between the X'tal and this terminals when using the local clock signal oscillator.
OSC2	Output	External terminal of the resonance circuit for local clock signal oscillation.
V_{DD}	Input	Power terminal, usually connected to +5V.
V_{SS}		Connected to 0V of power supply.
TEST	Input	LSI test terminal, usually connected to V_{SS} (0V).

1-CHIP 4-BIT CONTROL MICROPROCESSOR LM6413E (QQ01)

System Block Diagram

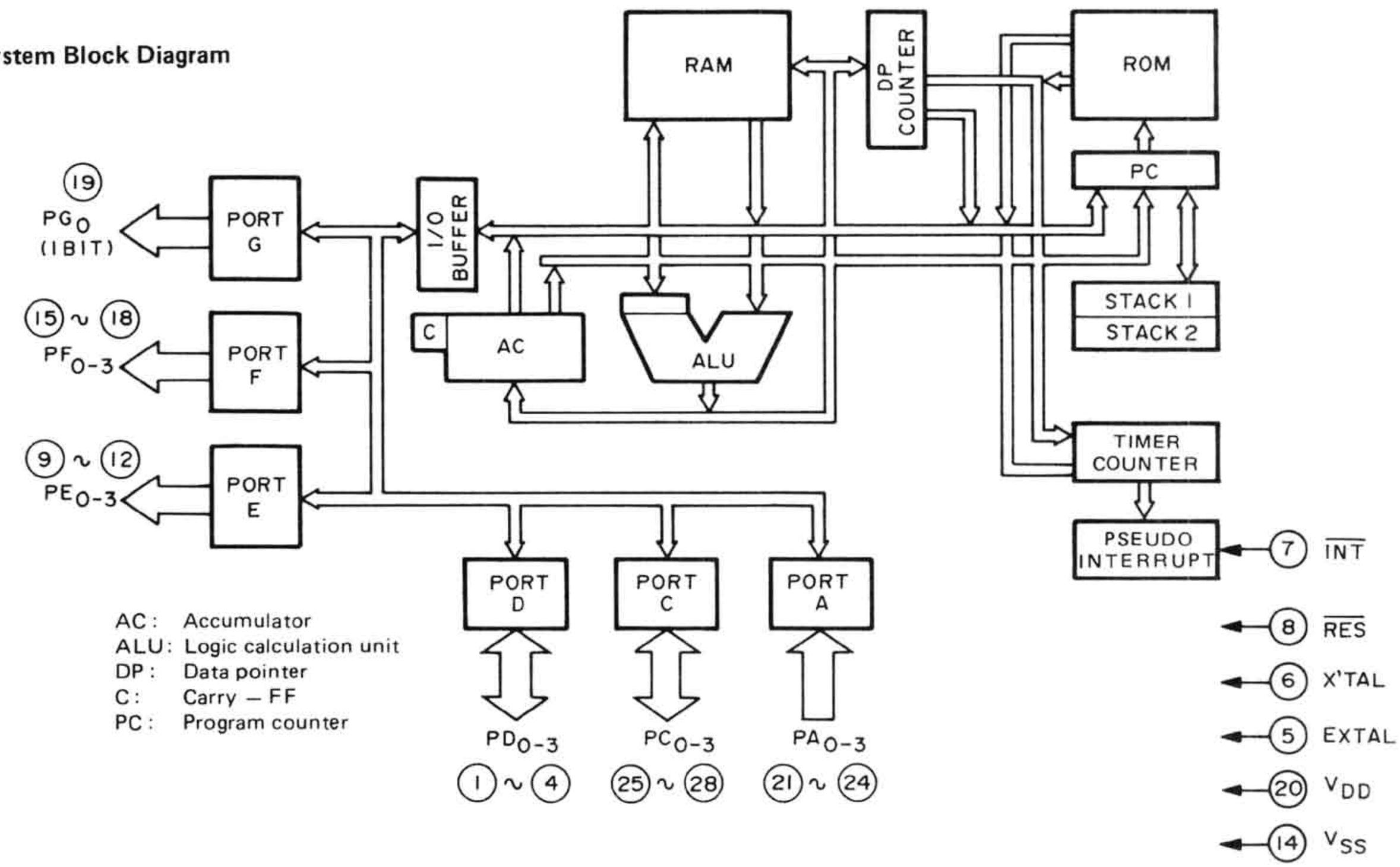

Package and Pin Names

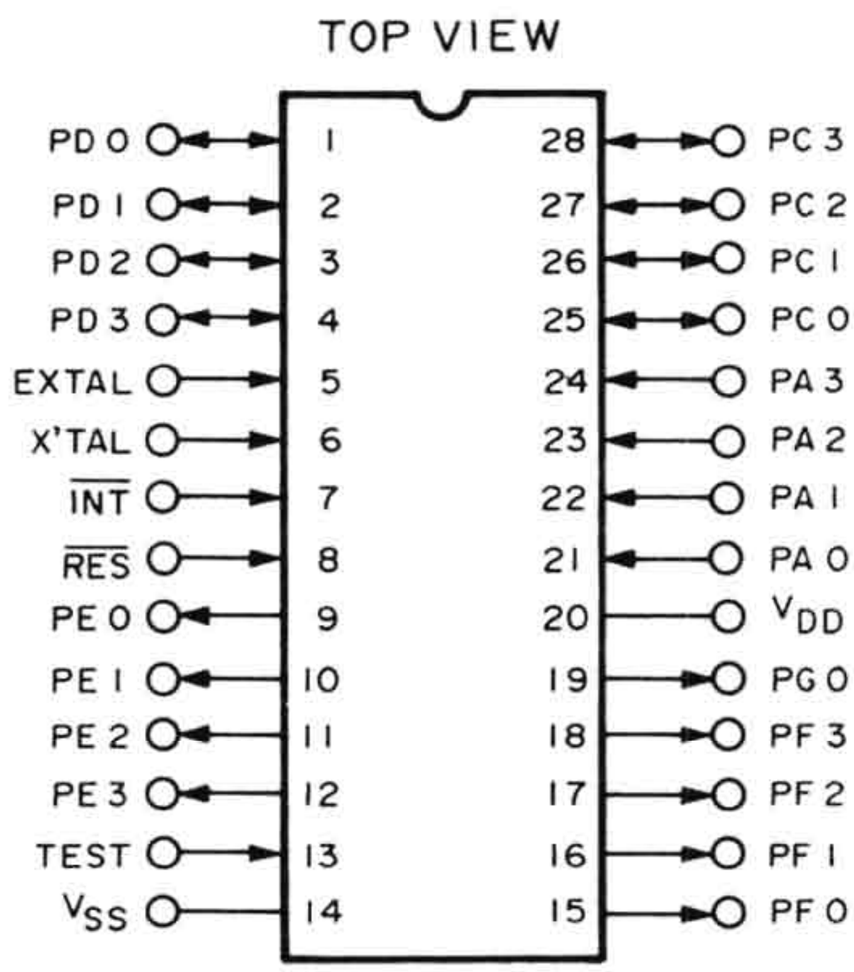

Pin Names

Xtal, EXtal :	Radiator for oscillator	
$\overline{INT}$:	Interrupt	
$\overline{RES}$:	Reset	
PA_{0-3} :	Input port	A_{0-3}
PC_{0-3} :	Input/output port	C_{0-3}
PD_{0-3} :	Input/output port	D_{0-3}
PE_{0-3} :	Output port	E_{0-3}
PF_{0-3} :	Output port	F_{0-3}
PG_0 :	Output port	G_0
TEST :	Test	

Pin Functions

Pin Name	Input/Output	Function
$\overline{INT}$:	Input :	Pseudo interrupt request input.
$\overline{RES}$:	Input :	Reset input.
PA_{0-3}	Input :	Input port A_0 to A_3; 4-bit input and bit test.
PC_{0-3}	Input/output :	Input/output port C_0 to C_3; 4-bit input and bit test during input; 4-bit output and bit setting and resetting during output, and immediate data output.
PD_{0-3}	Input/output :	Input/output port D_0 to D_3; 4-bit input and bit test during input; 4-bit output and bit setting and resetting during output, and immediate data output.
PE_{0-3}	Output :	Output port E_0 to E_3; 4-bit output and bit, setting and resetting.
PF_{0-3}	Output :	Output port F_0 to F_3; 4-bit output and bit, setting and resetting.
PG_0	Output :	Output port G_0; 1-bit output and bit setting and resetting.
Xtal :	Input/output :	Internal clock generator resonance circuit connetion; Use this pin and EXtal for connection of a ceramic radiator, CR, etc.
EXtal :	Input :	Operated by a clock supplied externally, or when using internal clock oscillator, used along with Xtal for connection of a ceramic radiator, CR, etc. (for ceramic or CR oscillation, switched by optional mask).
VDD :	Input :	Power supply, usually connected to +5 V
VSS :		Connected to power supply GND.
TEST :	Input :	LSI test, usually connected to VSS (GND)

7. BLOCK DIAGRAM

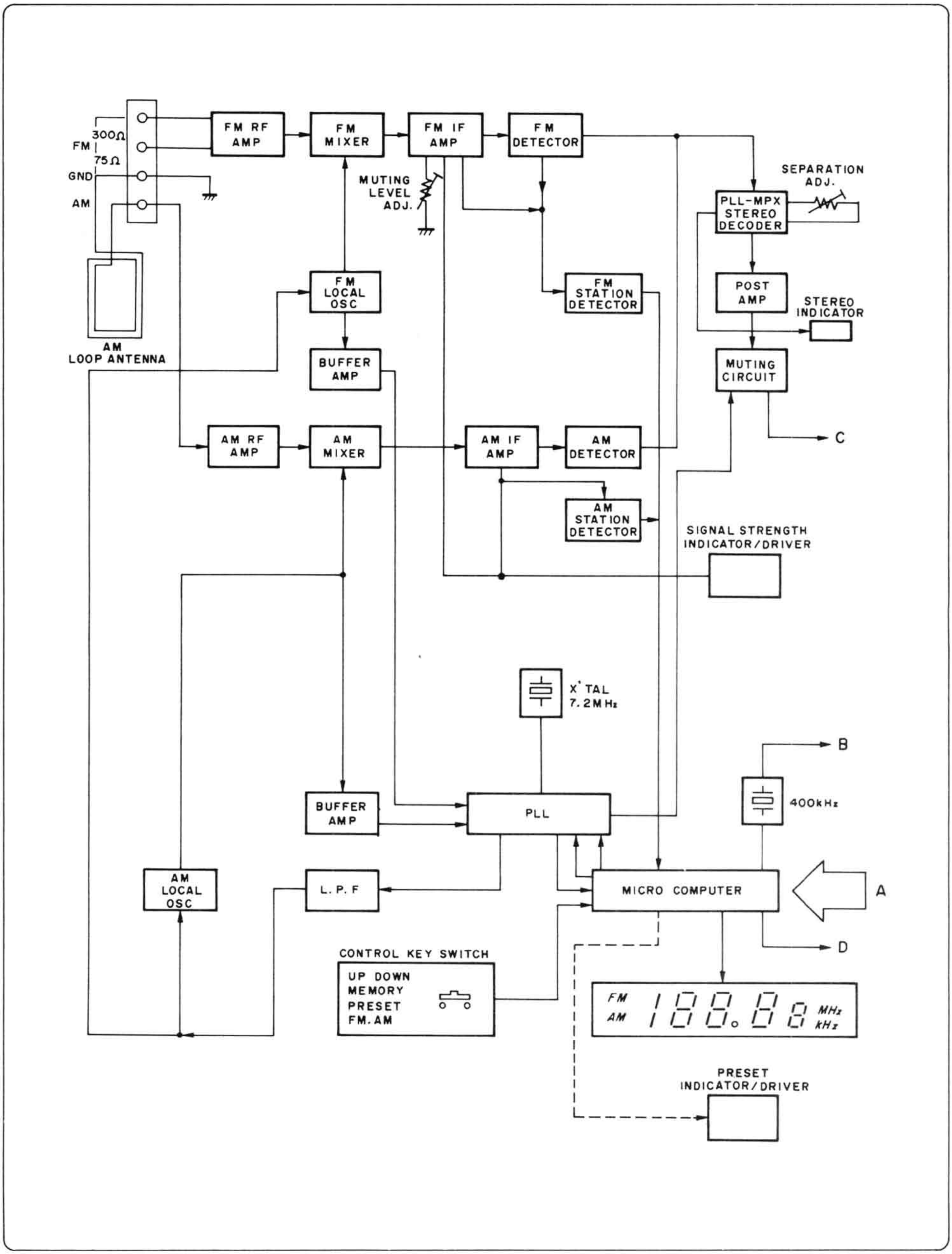

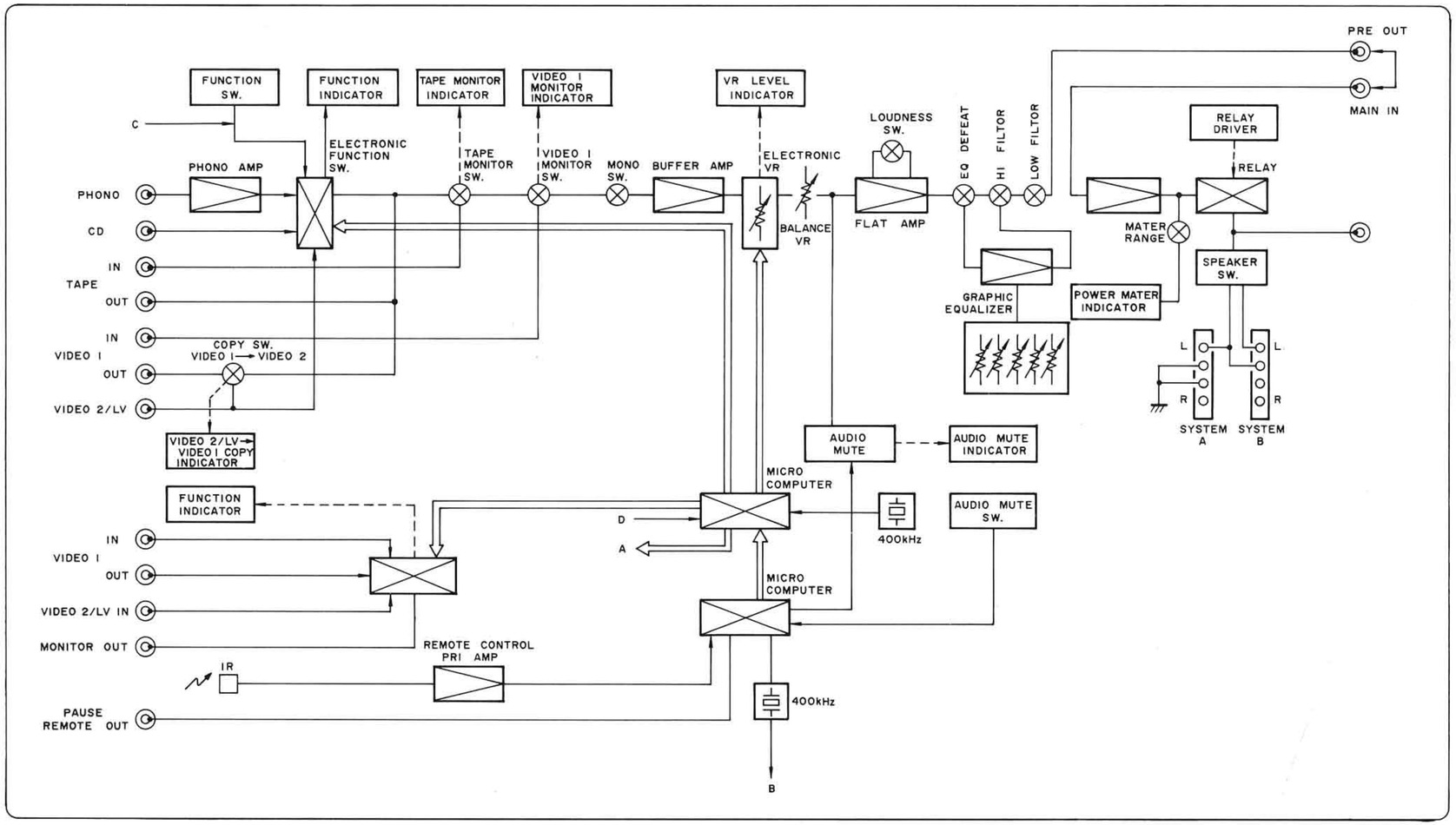

8. COMPONENT LOCATIONS

8.1 Tuner Preset Assembly (PC04) Component Locations

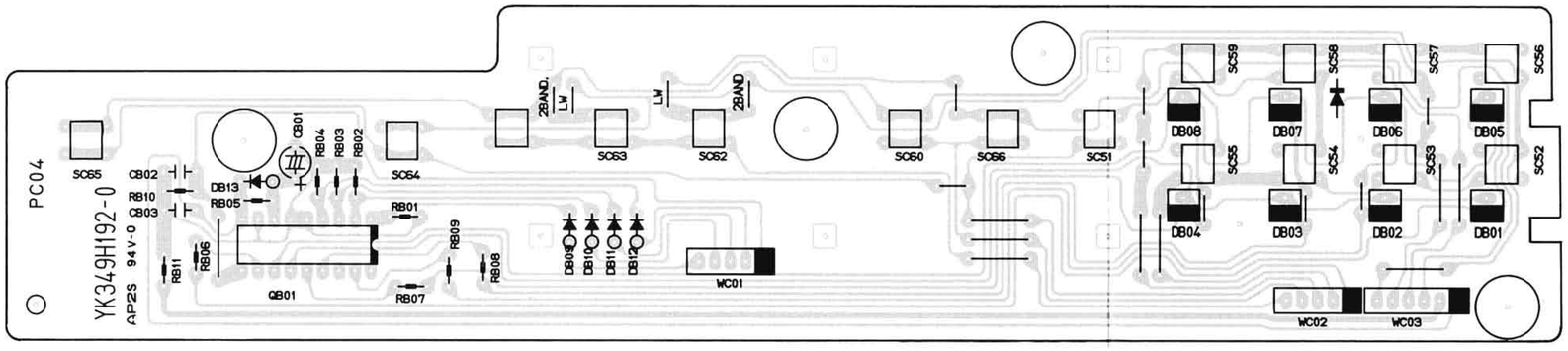

8.2 Power Meter, Function Indicator Assembly (PX54) Component Locations

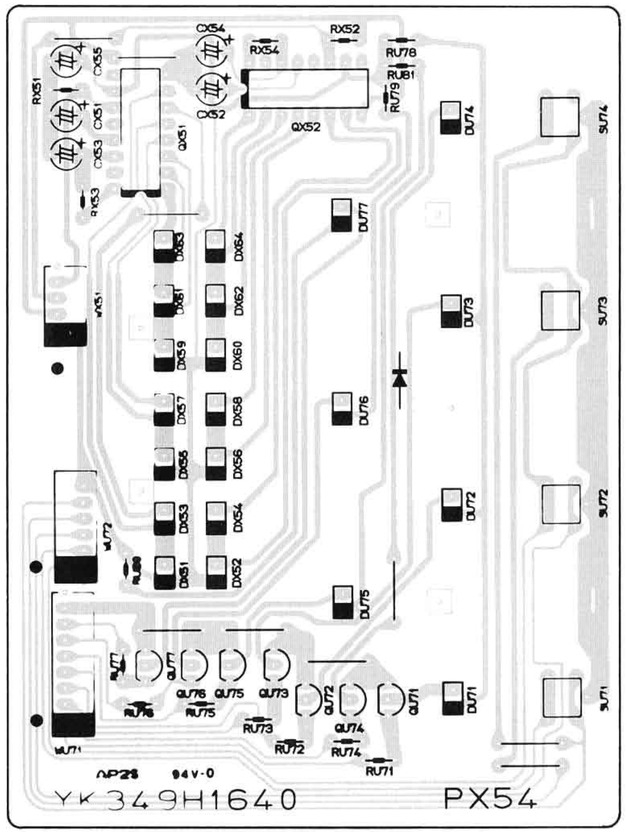

8.3 Volume Indicator Assembly (PG84) Component Locations

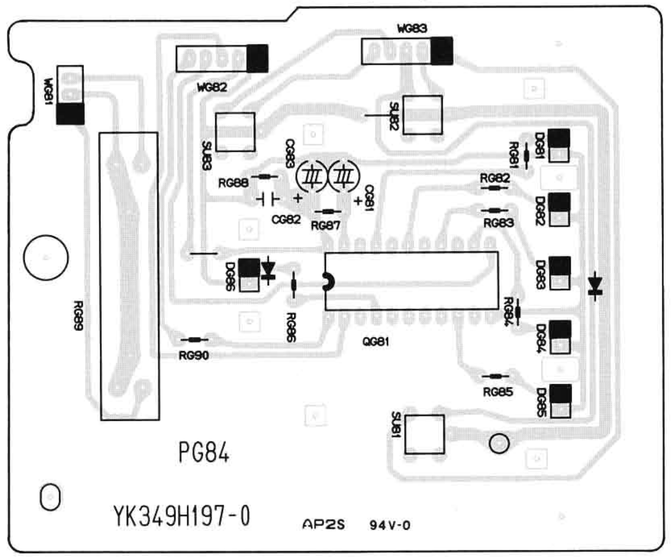

8.4 Main Amp/Power Supply Assembly (P704) Component Locations

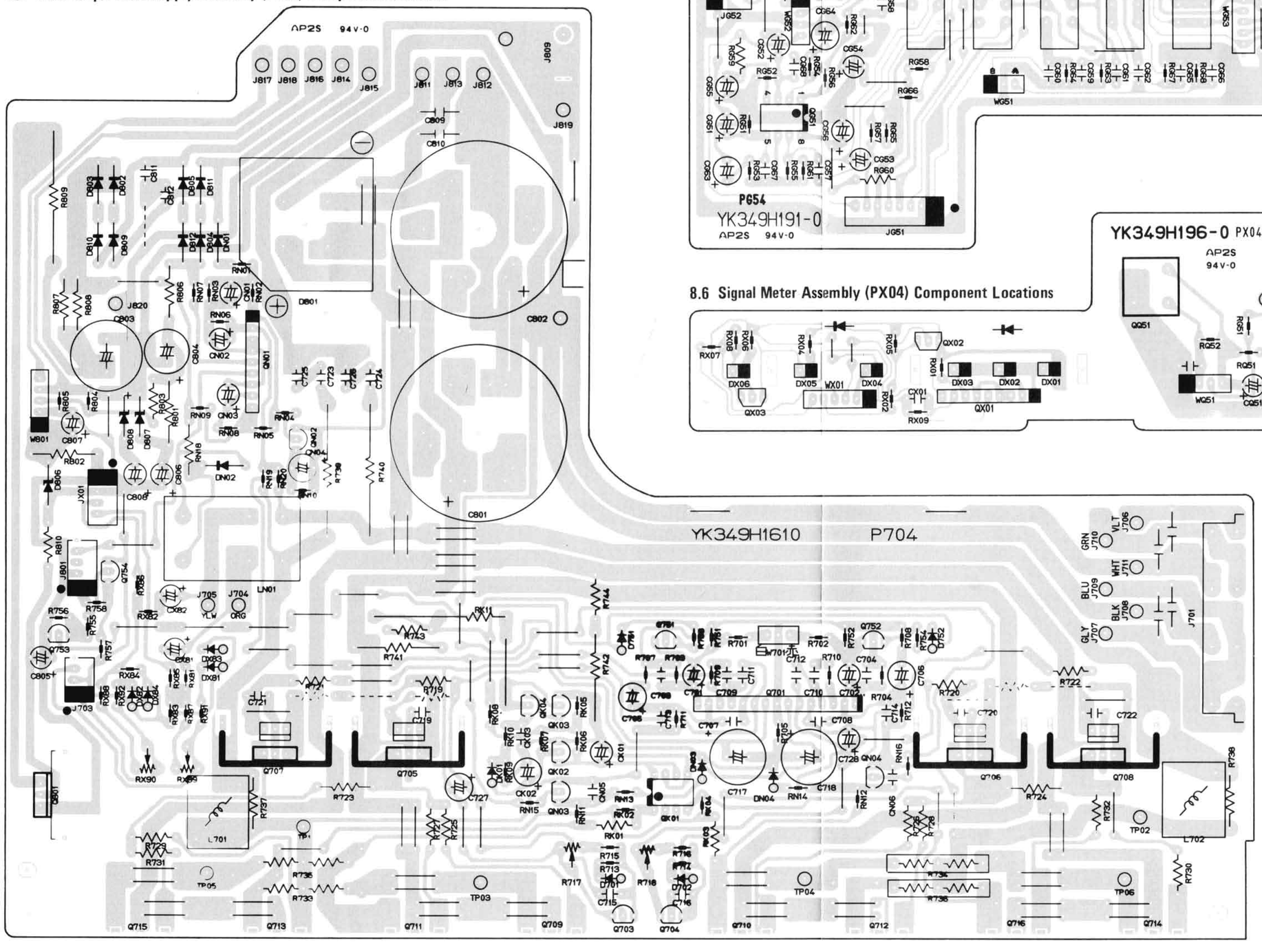

8.5 Loudness. Monitor Switch Assembly (PG54) Component Locations

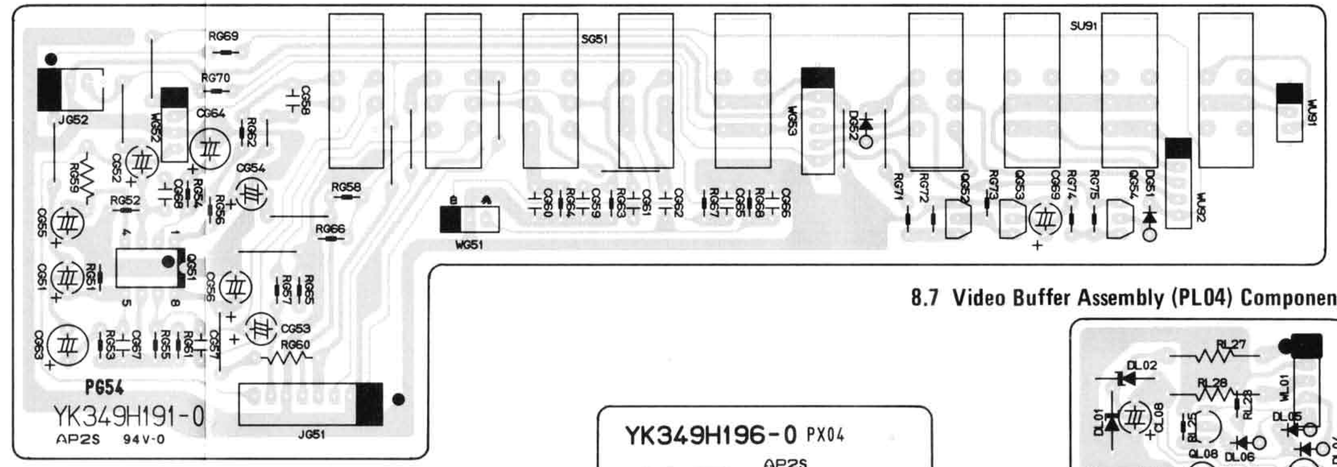

8.6 Signal Meter Assembly (PX04) Component Locations

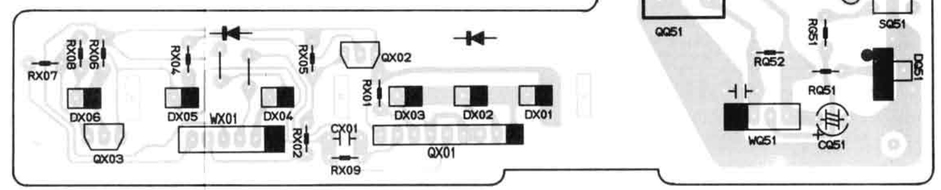

8.7 Video Buffer Assembly (PL04) Component Locations

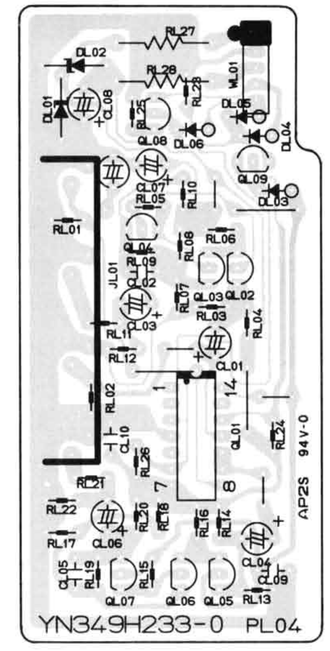

8.8 Speaker Switch, Headphone Jack Assembly (PT04) Component Locations

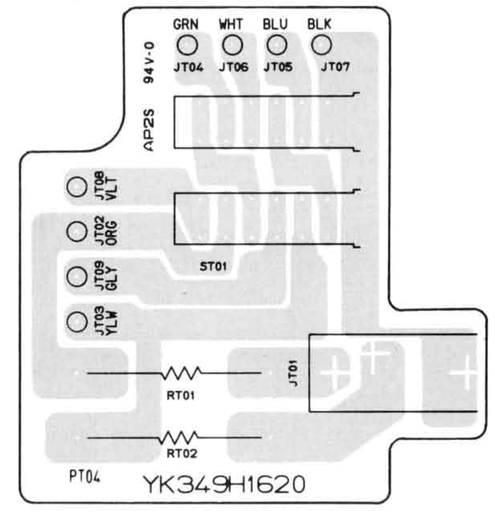

8.9 Power Switch Assembly (PP04) Component Locations

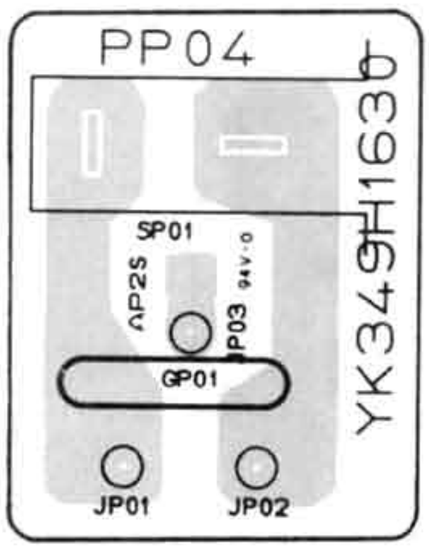

8.10 CD Remocon Output Assembly (PQ74) Component Locations

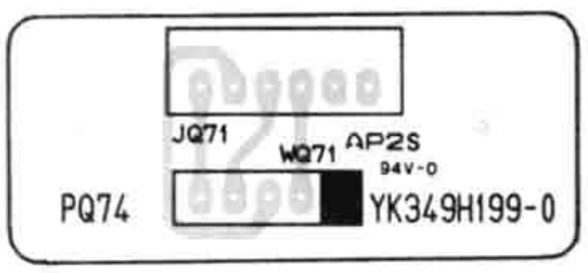

8.11 Remot Pause Out Assembly (PW04) Component Locations

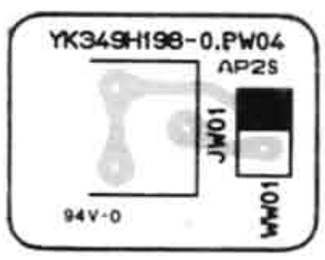

8.12 VCR, LV Assembly (PS14) Component Locations

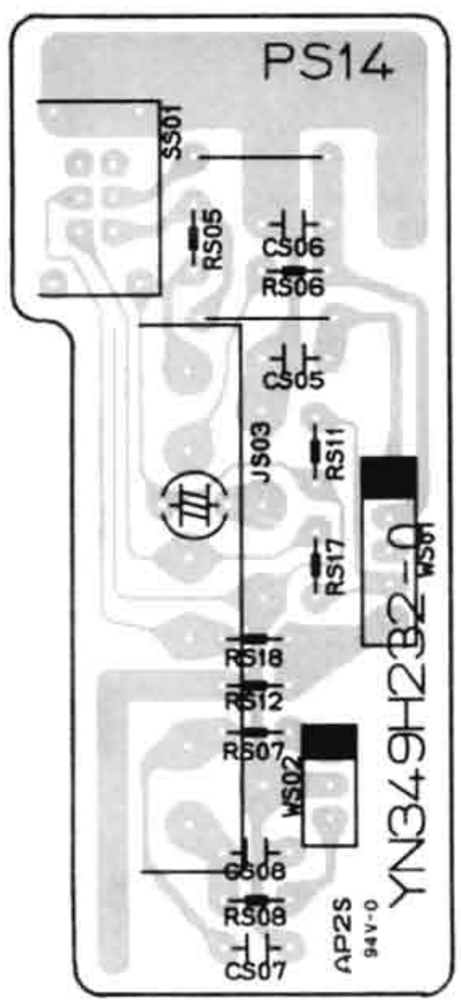

8.13 Tuner Assembly (P104) Component Locations

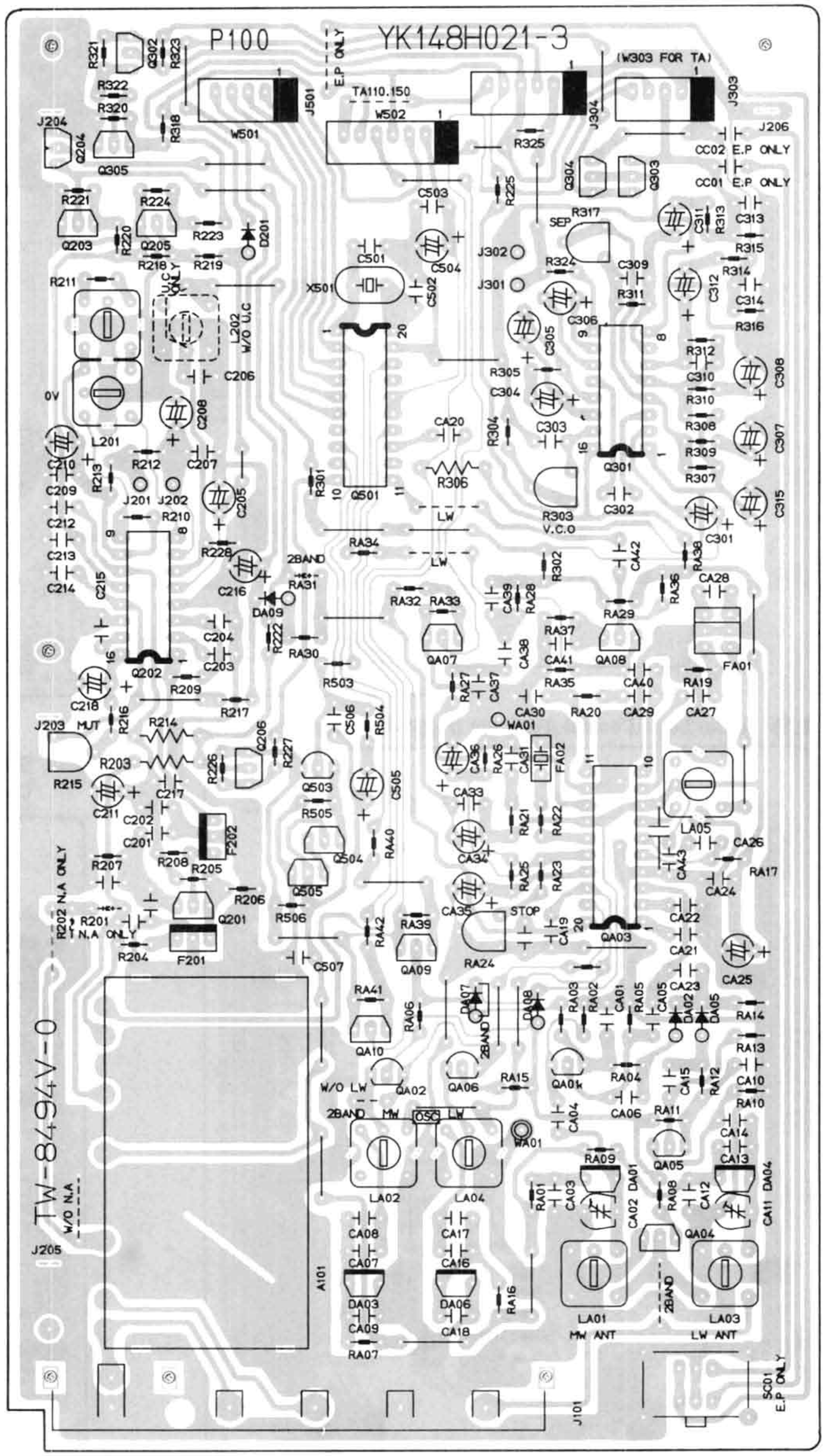

8.14 Tuner Logic Control Assembly (PR04) Component Locations

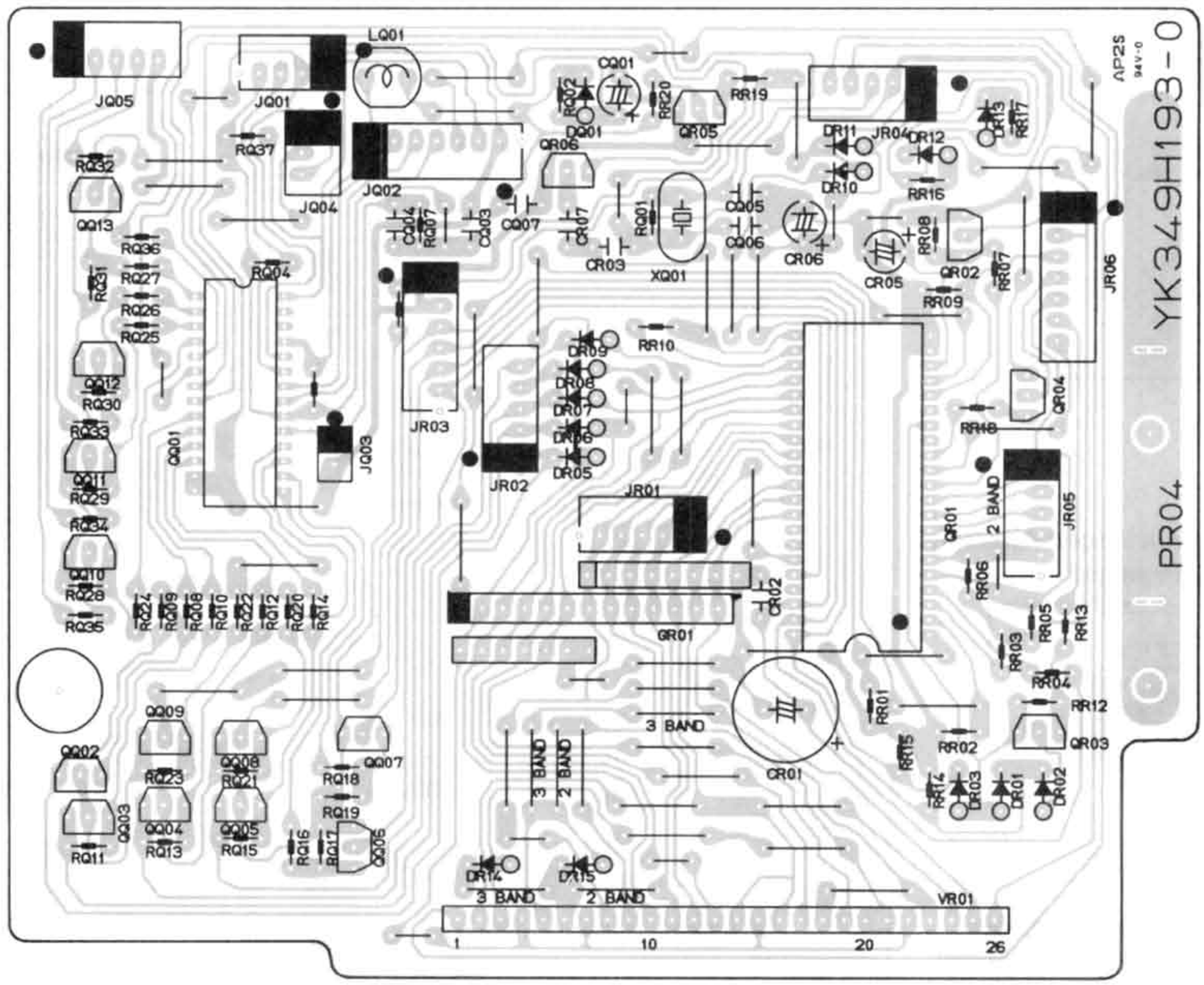

8.15 Audio Logic Control Assembly (PU54) Component Locations

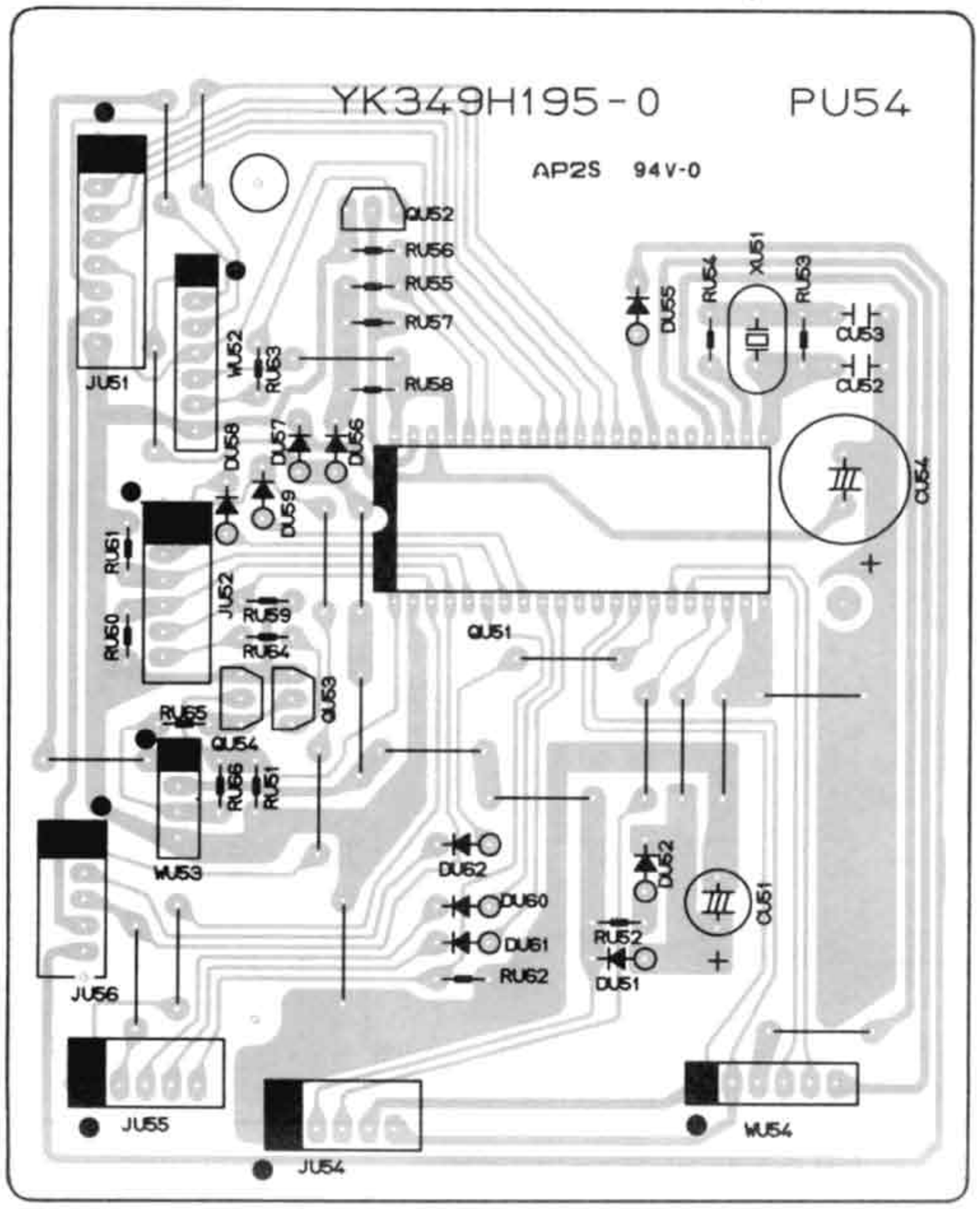

8.16 Back Up Power Supply Assembly (P854) Component Locations

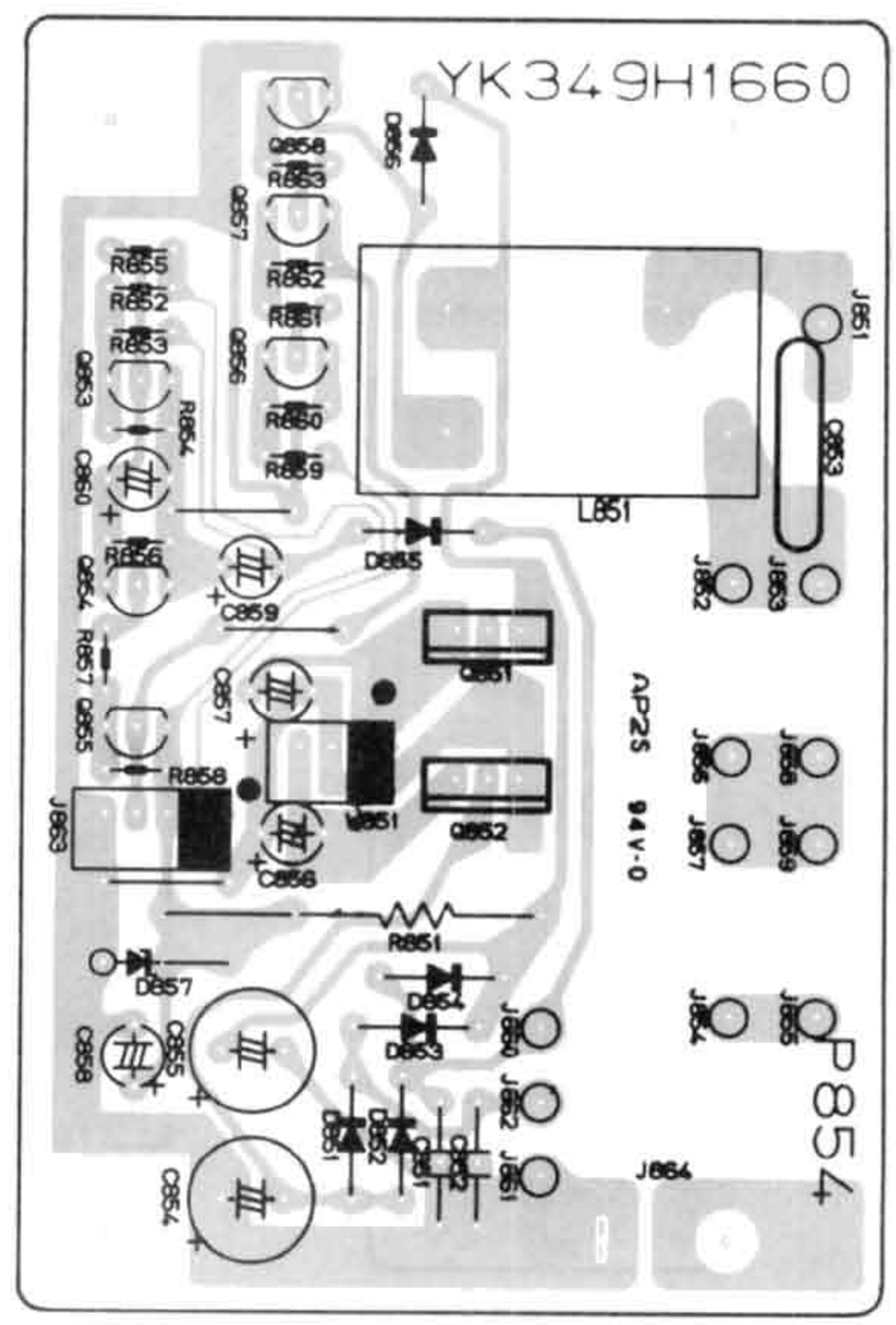

8.17 G. Equalizer Assembly (PE04) Component Locations

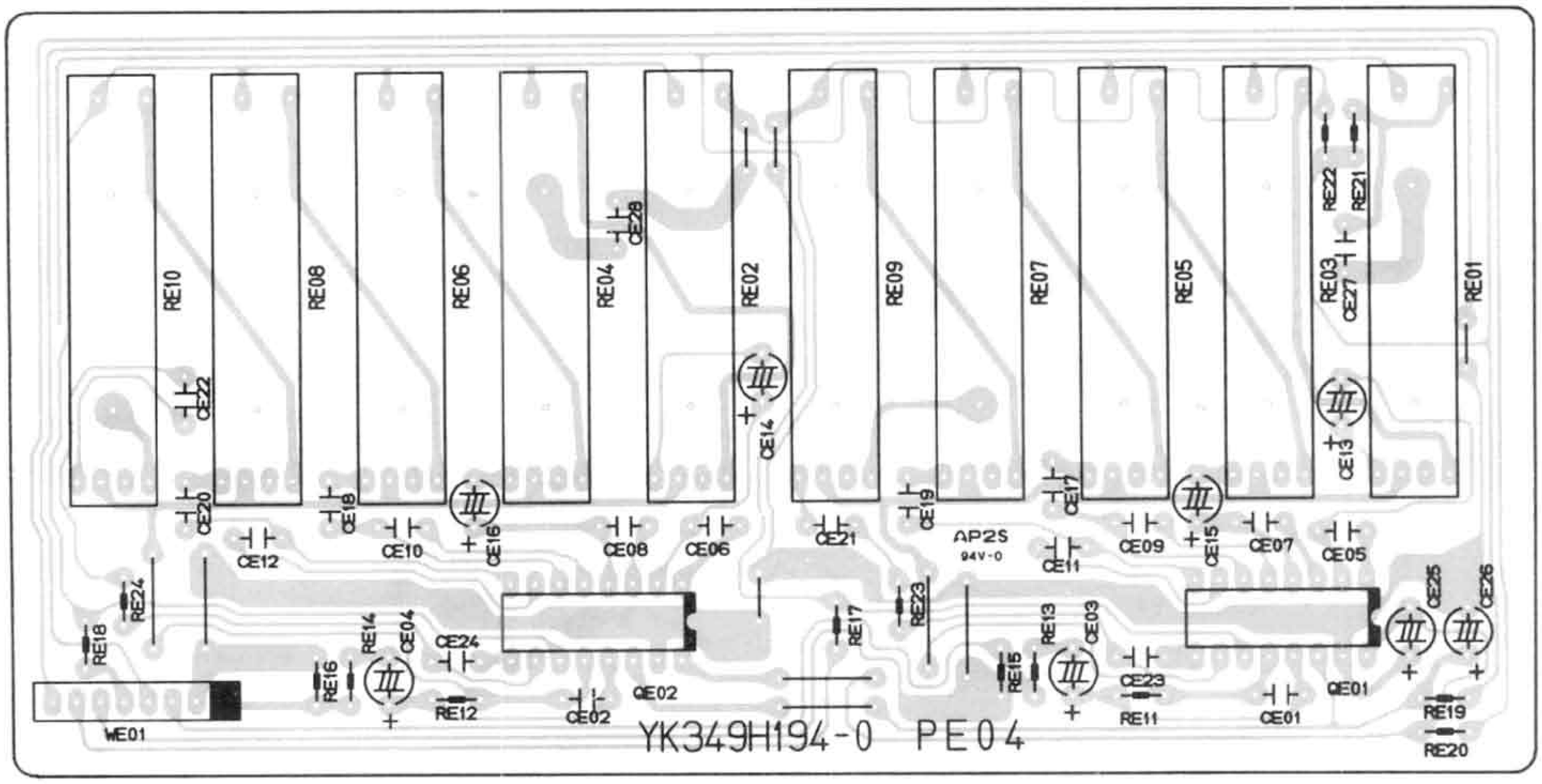

8.18 Pre Out/Main in Assembly (PW54) Component Locations

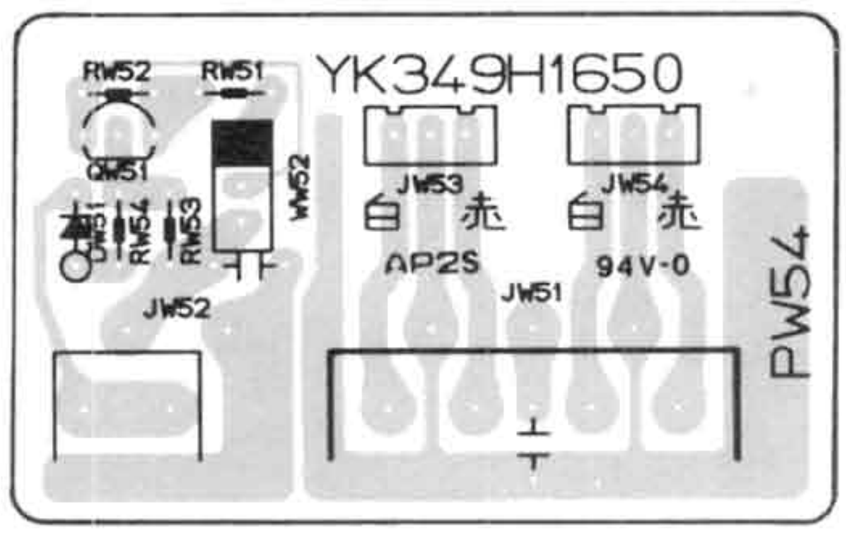

8.19 RCA Pin, Phone Function, Elect Volume Assembly (PS04) Component Locations

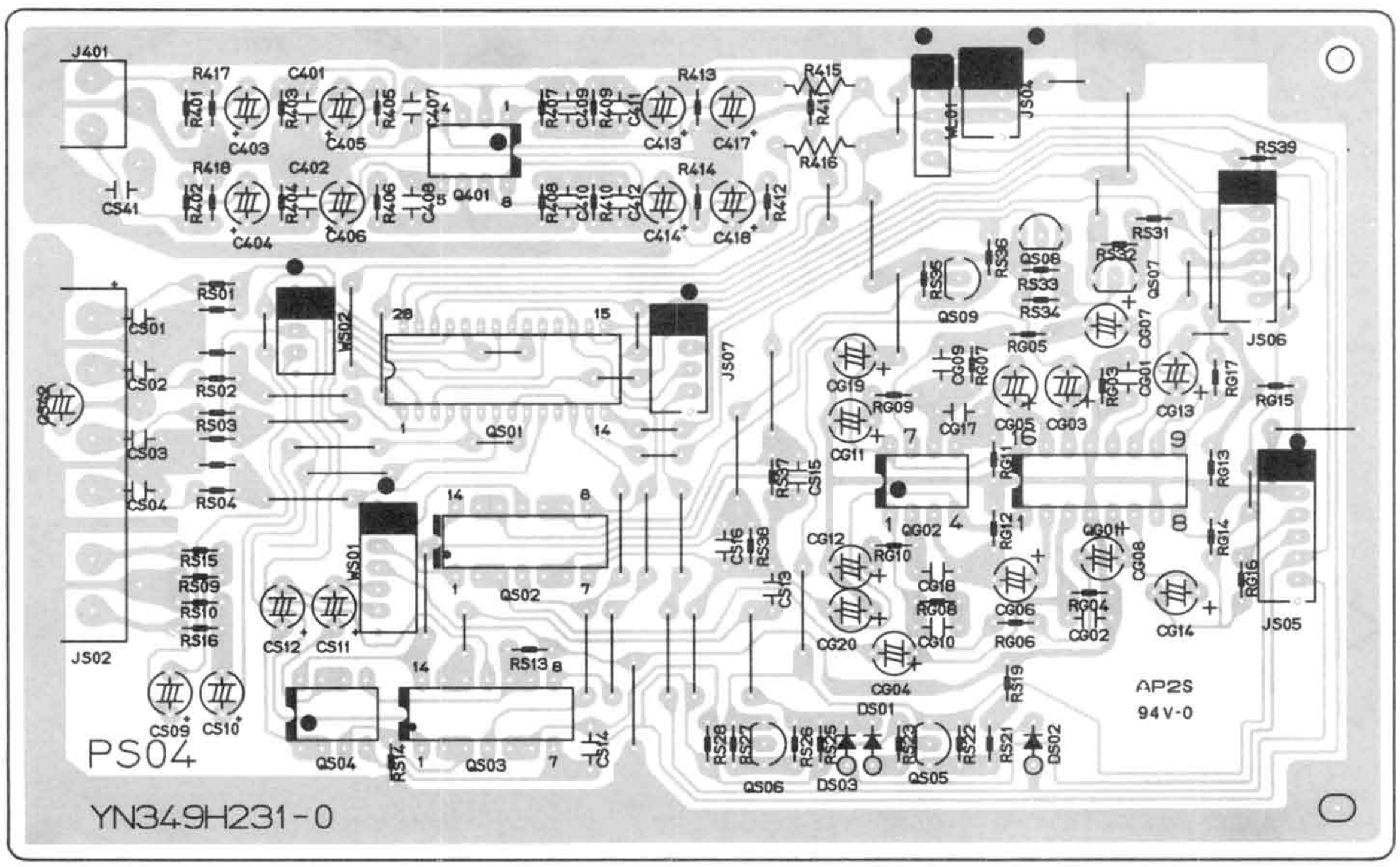

9. EXPLODED VIEW AND PARTS LIST

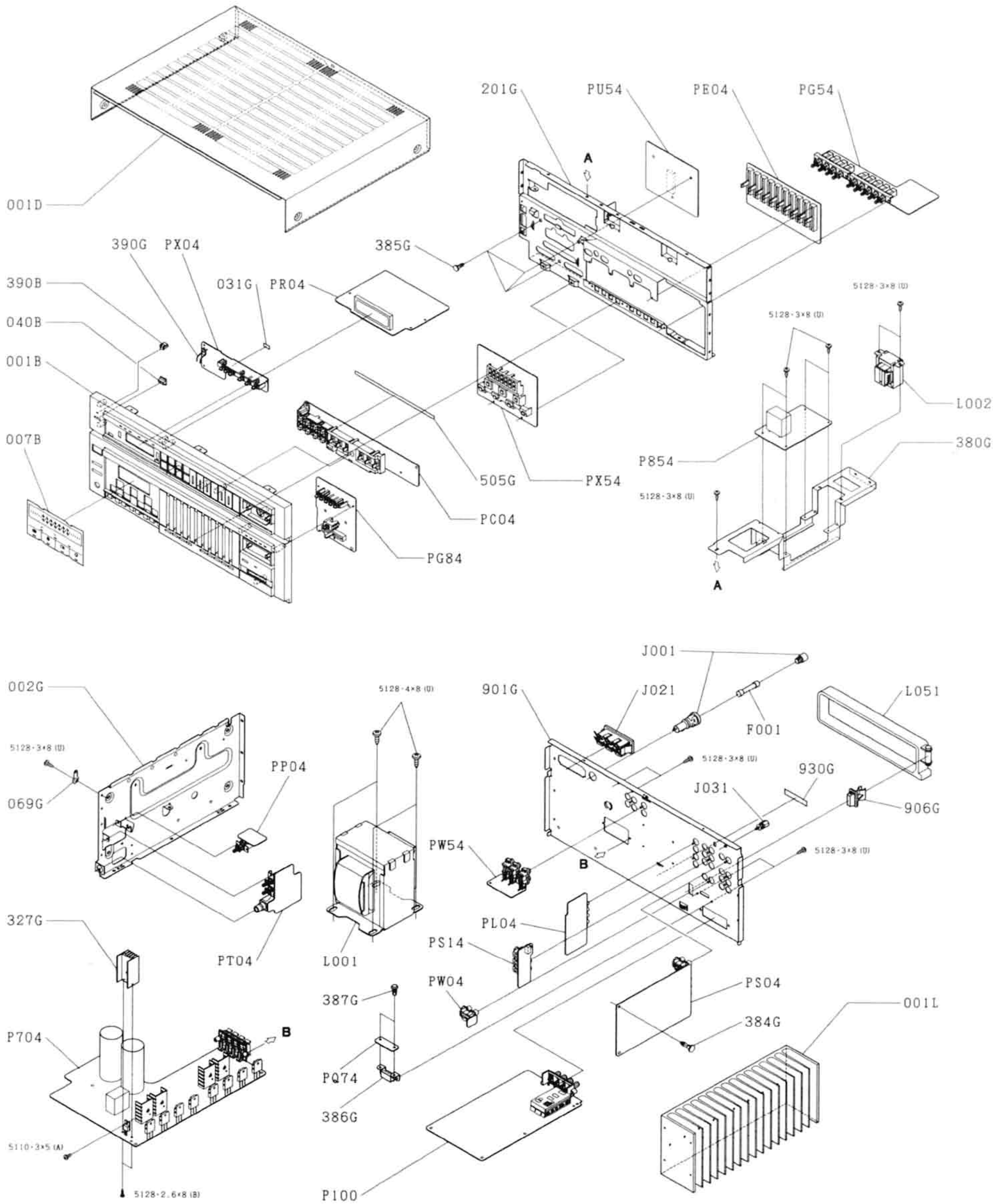

Different Parts between MODEL TA110/TA150 and TA135AV/TA170AV.

REF. DESIG.	TA110/TA150	TA135AV/170AV	DESCRIPTION
			PAGE 18
001B	158H248110	349H248010	Front Panel, Black [TA170AV]
	158H248010	349H248110	Front Panel, Gold [TA170AV]
	157H248110	350H248010	Front Panel, Black [TA135AV]
	157H248010	350H248110	Front Panel, Gold [TA135AV]
007B	158H265120	349H265120	Indicator, Gold [TA170AV]
	158H265020	349H265020	Indicator, Black [TA170AV]
	157H265120	350H265120	Indicator, Gold [TA135AV]
	157H265020	350H265020	Indicator, Black [TA135AV]
037B	452H118010		
040B		132T154310	Knob, Black, Power Standby
		132T154010	Knob, Gold, Power Standby
390B		178H355010	Lens, Power Standby
031G		157T118010	Spacer
090G	158H109010		
380G		350H160010	Bracket
385G		467H118010	Spacer
390G		350H118010	Spacer
505G		157H120010	Insulator
⚠L002		TS14132350	Power Transformer, Back UP
			PAGE 19
001D		157H257120	Lid, Top Cover, Black
		157H257020	Lid, Top Cover, Gold
001S	158H801010	349H801010	Packing Case [TA170AV]
	157H801010	350H801010	Packing Case [TA135AV]
011S		157H107010	Sheet, Front Panel
001T	158H851210	349H851210	User Manual
002T	158H851220		
	157H851210		
002T		103H854010	Warranty Card
003T	103H854010		
003T		180T854010	Warranty Card
004T	180T854010		
Z001	ZK157H0010	ZK349H0010	Remocon Unit K, Black
		ZK349H0020	Remocon Unit K, Gold
Z004		ZD01000250	Connective Cord
			PAGE 20
901G	158H250010	349H250010	Rear Panel [TA170AV]
	157H250010	350H250010	Rear Panel [TA135AV]
⚠F001	FS10800500	FS10700500	Fuse, 7A 250V [TA170AV]
	FS10700500	FS10600500	Fuse, 6A 250V [TA135AV]
⚠J001	YJ08000300	YJ08000410	Jack, Fuse Holder
⚠J021	YJ04001210	YJ04001180	Jack, AC Outlet
J031	YL03010250	YL03010280	Terminal, GND
L051	LA00015020	LA00035010	Antenna Coil, Loop
384G		045H118010	Spacer
386G		350H104010	Retainer
387G		2276005050	Clamper
			PAGE 21
311G	157H160020	263H160020	Bracket, Heatsink Rear
001L	158H267010	349H267010	Heatsink, Main [TA170AV]
	157H267010	350H267010	Heatsink, Main [TA135AV]
⚠L001	TS61410020	TS61420010	Power Transformer [TA170AV]
	TS19624050	TS19628040	Power Transformer [TA135AV]

ASSIGNMENT OF COMMON PARTS CODES.

RESISTOR

R***: (1) GD05 --- 140, Carbon film fixed resistor, ±5%, 1/4W
R***: (2) GD05 --- 160, Carbon film fixed resistor, ±5%, 1/6W

① — Resistance value

Examples

① Resistance value

0.1Ω...001	10Ω...100	1kΩ...102	100kΩ...104
0.5Ω...005	18Ω...180	2.7kΩ...272	680kΩ...684
1Ω...010	100Ω...101	10kΩ...103	1MkΩ...105
6.8Ω...068	390Ω...391	22kΩ...223	4.7MkΩ...475

(Note) Please distinguish 1/4W from 1/6W by the shape of parts used actually.

C***: CERAMIC CAP.

(1) DD1 ---- 370, Ceramic condenser
Disc type
Temp. coeff. P350 ~ N1000, 50V

①② — Capacity value
① — Tolerance

Examples

① Tolerance (Capacity deviation)

±0.25pF...0
±0.5pF...1
±5%...5

* Tolerance of COMMON PARTS handled here are as follows:

0.5pF ~ 5pF...±0.25pF
6pF ~ 10pF...±0.5pF
12pF ~ 560pF...±5%

② Capacity value

0.5pF...005	3pF...030	100pF...101
1pF...010	10pF...100	220pF...221
1.5pF...015	47pF...470	560pF...561

C***: CERAMIC CAP.

(1) DK16 --- 300, High dielectric constant ceramic condenser
Disc type
Temp. chara. 2B4, 50V

① — Capacity value

Example

② Capacity value

100pF...101	1000pF...102	10000pF...103
470pF...471	2200pF...222	

C***: ELECTROLY CAP. (⧺), FILM CAP. (⧺)

(1) EA ------ 10, Electrolytic condenser
One-way lead type, Tolerance ±20%

①② — Dielectric strength
① — Capacity value

Examples

① Capacity value

0.1μF...104	4.7μF...475	100μF...107
0.33μF...334	10μF...106	330μF...337
1μF...105	22μF...226	1100μF...108
		2200μF...228

② Working voltage

6.3V...006	25V...025
10V...010	35V...035
16V...016	50V...050

(2) DF15 --- 350, Plastic film condenser
One-way type, Mylar ±5% 50V

① — Capacity value

Examples

① Capacity value

0.001μF (1000pF)...102	0.1μF...104
0.0018μF.....182	0.56μF...564
0.01μF.....103	1μF...105
0.015μF.....153	

10. ELECTRICAL PARTS LIST

REF. DESIG.	PART NO.	DESCRIPTION
		PC04-TUNER PRESET CIRCUIT BOARD
PC04	YK349H1920	P.W. Board, Tuner Preset
CB03	DK18103310	Ceramic Cap. 0.01μF +80% −20%
DB01 ~ DB08	HI10034320	L.E.D. GL-9EG14
DB09 ~ DB13	HD20002000	Diode 1SS133, etc.
QB01	HC10171030	IC LC7572
SC51 ~ SC60	SP01011000	Push Switch
SC62 ~ SC66	SP01011000	Push Switch
WC01	YU05280260	Jumper Lead, 5P
WC02	YU05220260	Jumper Lead, 5P
WC03	YU06200260	Jumper Lead, 6P
		PE04-GRAPHIC EQ. CIRCUIT BOARD
PE04	YK349H1940	P.W. Board, Graphic EQ.
		PE04-CAPACITORS
CE27	DK18223310	Ceramic 0.022μF +80% −20%
CE28	DK18223310	Ceramic 0.022μF +80% −20%
		PE04-RESISTORS
RE01 ~ RE10	RX01040110	100KΩ(W), Variable
		PE04-SEMICONDUCTORS
QE01	HC10036200	IC M5222P
QE02	HC10036200	IC M5222P
		PE04-MISCELLANOUS
WE01	YU08160260	Jumper Lead, 8P
		PG54-LOUD/MONI/MODE SW. CIRCUIT BOARD
PG54	YK349H1910	P.W. Board, Loud/Moni/Mode SW.
RG59	GG05181140	Resistor 180Ω ±5% ¼W
RG60	GG05181140	Resistor 180Ω ±5% ¼W
DG51	HD20002000	Diode 1SS133, etc.
DG52	HD20002000	Diode 1SS133, etc.
QG51	HC10008090	IC NJM4558D-D
QG52	HT30001000	Transistor 2SC536SP, etc.
QG53	HT30001000	Transistor 2SC536SP, etc.
QG54	HT10001000	Transistor 2SA608SP, etc.

REF. DESIG.	PART NO.	DESCRIPTION
JG51	YJ06002270	Jack, 8P
JG52	YJ06002430	Jack, 3P
SG51	SP02050160	Push Switch
SU91	SP02040400	Push Switch
WG51	YB00560060	Connective Cord
WG52	YU04300260	Jumper Lead, 4P
WG53	YU06300260	Jumper Lead, 6P
WU91	YU03140260	Jumper Lead, 3P
WU92	YU05200260	Jumper Lead, 5P
		PG84-VOL IND. UP/DOWN & MUTE SW. CIRCUIT BOARD
PG84	YK349H1970	P.W. Board, Vol Ind. Up/Down & Mute SW.
CG82	DK18223310	Ceramic Cap. 0.022μF +80% −20%
RG89	RX05030260	Variable Resistor, 50KΩ(W)
DG81	HI10051030	L.E.D. SLP251B-60
DG82	HI10051030	L.E.D. SLP251B-60
DG83	HI10051030	L.E.D. SLP251B-60
DG84	HI10051030	L.E.D. SLP251B-60
DG85	HI10050030	L.E.D. SLP151B-60
DG86	HI10050030	L.E.D. SLP151B-60
QG81	HC10001260	IC MSM59371RS
SU81	SP01011000	Push Switch, UP
SU82	SP01011000	Push Switch, Down
SU83	SP01010970	Push Switch, Mute
WG81	YU03120260	Jumper Lead, 3P
WG82	YU05240260	Jumper Lead, 5P
WG83	YU05240260	Jumper Lead, 5P
		PL04-VIDEO BUFFER CIRCUIT BOARD
PL04	YN349H2330	P.W. Board, Video Buffer
		PL04-CAPACITORS
CL09	DK18223310	Ceramic 0.022μF +80% −20%
CL10	DK18223310	Ceramic 0.022μF +80% −20%
		PL04-RESISTORS
RL27	GA05221010	220Ω ±5% 1W
RL28	GA05221010	220Ω ±5% 1W
		PL04-SEMICONDUCTORS
DL01	HD30004020	Zener MA1051M
DL02	HD30004020	Zener MA1051M
DL03	HD20002000	Diode 1SS133, etc.
DL04	HD20002000	Diode 1SS133, etc.
DL05	HD20002000	Diode 1SS133, etc.
DL06	HD20002000	Diode 1SS133, etc.
QL01	HC406603C0	IC LC4066B-H
QL02 ~ QL07	HT30001000	Transistor 2SC536SP(F, G), etc.
QL08	HT10001000	Transistor 2SA608SP(F, G), etc.
QL09	HT10001000	Transistor 2SA608SP(F, G), etc.

REF. DESIG.	PART NO.	DESCRIPTION
		PL04-MISCELLANEOUS
JL01	YT02040700	Terminal, RCA
WL01	YU05200260	Jumper Lead, 5P
		PP04-POWER SWITCH CIRCUIT BOARD
PP04	YK349H1630	P.W. Board, Power Switch
⚠GP01	DK18103840	Ceramic Cap. 0.01μF 400V
⚠SP01	SP01010830	Push Switch, Power
		PQ74-CD REMOCON OUTPUT CIRCUIT BOARD
PQ74	YK349H1990	P.W. Board, CD Remocon Output
JQ71	YP06004450	Plug
WQ71	YU05720260	Jumper Lead, 5P
		PR04-TUNER LOGIC CONTROL CIRCUIT BOARD
PR04	YK349H1930	P.W. Board, Tuner Logic Control
		PR04-CAPACITORS
CQ03	DK18103310	Ceramic 0.01μF +80% −20%
CQ04	DK18103310	Ceramic 0.01μF +80% −20%
CR02	DK18103310	Ceramic 0.01μF +80% −20%
CR07	DK18103310	Ceramic 0.01μF +80% −20%
		PR04-RESISTOR
GR01	BW05104020	100KΩx12 ±5% 1/8W, Composite
		PR04-SEMICONDUCTORS
DQ01	HD20002000	Diode 1SS133, etc.
DR03	HD20002000	Diode 1SS133, etc.
DR05 ~ DR13	HD20002000	Diode 1SS133, etc.
QQ01	HU10006030	Microprocessor LM6413E
QQ02 ~ QQ13	HT10001000	Transistor 2SA608SP(F, G), etc.
QR01	HC10163030	IC LC6502D-726
QR02	HT30001000	Transistor 2SC536SP(F, G), etc.
QR04	HT30001000	Transistor 2SC536SP(F, G), etc.
QR05	HT30001000	Transistor 2SC536SP(F, G), etc.
QR06	HT30001000	Transistor 2SC536SP(F, G), etc.
		PR04-MISCELLANEOUS
JQ01	YJ06002440	Jack, 4P
JQ02	YJ06002460	Jack, 7P
JQ03	YJ07001520	Jack, 2P
JQ04	YJ06002430	Jack, 3P
JQ05	YJ06002390	Jack, 5P
JR01	YJ06002390	Jack, 5P
JR02	YJ06002390	Jack, 5P
JR03	YJ06002450	Jack, 6P
JR04	YJ06002390	Jack, 5P
JR05	YJ06002390	Jack, 5P
JR06	YJ06002460	Jack, 7P
VR01	HQ30705060	Display Unit, FIP7P8C
XR01	FQ04003010	Seramic Vibrator, CSB400P

REF. DESIG.	PART NO.	DESCRIPTION
		PS04-PHO/FUNC/EL VOL CIRCUIT BOARD
PS04	YN349H2310	P.W. Board, Pho/Func/EL Vol
		PS04-CAPACITORS
CS13	DK18473310	Ceramic 0.047μF +80% −20%
CS14	DK18473310	Ceramic 0.047μF +80% −20%
CS15	DK18473310	Ceramic 0.047μF +80% −20%
CS16	DK18473310	Ceramic 0.047μF +80% −20%
CS43	DK18223310	Ceramic 0.022μF +80% −20%
		PS04-RESISTORS
R415	GG05181140	180Ω ±5% ¼W
R416	GG05181140	180Ω ±5% ¼W
		PS04-SEMICONDUCTORS
DS01	HD20002000	Diode 1SS133, etc.
DS02	HD20002000	Diode 1SS133, etc.
DS03	HD20002000	Diode 1SS133, etc.
QG01	HC10118050	IC TC9176P
QG02	HC10008090	IC NJM4558D-D
QS01	HC10117050	IC TC9163N
QS02	HC10150030	IC LC4966
QS03	HC10150030	IC LC4966
QS04	HC10008090	IC NJM4558D-D
QS05	HT10001000	Transistor 2SA608SP(F, G), etc.
QS06	HT10001000	Transistor 2SA608SP(F, G), etc.
QS07	HT30001000	Transistor 2SC536SP(F, G), etc.
QS08	HT10001000	Transistor 2SA608SP(F, G), etc.
QS09	HT10001000	Transistor 2SA608SP(F, G), etc.
Q401	HC10026090	IC NJM2041D-D
		PS04-MISCELLANEOUS
JS02	YT02060240	Terminal, 6P; RCA
JS04	YJ06002430	Jack, 3P
JS05	YJ06002450	Jack, 6P
JS06	YJ06002450	Jack, 6P
JS07	YJ06002440	Jack, 4P
J401	YT02020490	Terminal, 2P; RCA
WS01	YU05160260	Jumper Lead, 5P
WS02	YU03140260	Jumper Lead, 3P
		PS14-VCR/LV CIRCUIT BOARD
PS14	YN349H2320	P.W. Board, VCR/LV
JS03	YT02060240	Terminal, 6P; RCA
SS01	SS02021010	Slide Switch, MON-ST
		PT04-SPK SW/HEADPHONE CIRCUIT BOARD
PT04	YK349H1620	P.W. Board, SPK SW./Headphone
RT01	NK05331030	Metal Resistor, 330Ω ±5% 3W
RT02	NK05331030	Metal Resistor, 330Ω ±5% 3W
JT01	YJ01002080	Jack, Headphone, Black
	YJ01001790	Jack, Headphone, Gold
ST01	SP04020440	Push Switch, Speaker

REF. DESIG.	PART NO.	DESCRIPTION
		PU54-AUDIO LOGIC CONTROL CIRCUIT BOARD
PU54	YK349H1950	P.W. Board, Audio Logic Control
		PU54-CAPACITOR
CU54	EJ10801670	Elect 1000μF 16V
		PU54-SEMICONDUCTORS
DU51	HD20002000	Diode 1SS133, etc.
DU52	HD20002000	Diode 1SS133, etc.
DU55 ~ DU62	HD20002000	Diode 1SS133, etc.
QU51	HC10169030	IC LM6502C
QU52	HT30001000	Transistor 2SC536SP(F, G), etc.
QU53	HT30001000	Transistor 2SC536SP(F, G), etc.
QU54	HT30001000	Transistor 2SC536SP(F, G) etc.
		PU54-MISCELLANEOUS
JU51	YJ06002270	Jack, 8P
JU52	YJ06002450	Jack, 6P
JU54	YJ06002390	Jack, 5P
JU55	YJ06002390	Jack, 5P
JU56	YJ06002390	Jack, 5P
WU52	YU07220260	Jumper Lead, 7P
WU53	YU04240260	Jumper Lead, 4P
WU54	YU06460260	Jumper Lead, 6P
XU51	FQ04003010	Seramic Viblator, CSB400P
		PW04-REMOTE PAUSE OUT CIRCUIT BOARD
PW04	YK349H1980	P.W. Board, Remote Pause Out
JW01	YT02020510	Terminal, 2P; RCA
WW01	YU02720260	Jumper Lead, 2P
		PW54-PRE OUT/MAIN IN CIRCUIT BOARD
PW54	YK349H1650	P.W. Board, Pre Out/Main In
DW51	HD20002000	Diode 1SS133, etc.
QW51	HT10001000	Transistor 2SA608SP(F, G), etc.
JW51	YT02040610	Terminal, 4P; RCA
JW52	YT02020550	Terminal, 2P; RCA
JW53	YP06003330	Plug, 3P
JW54	YP06003330	Plug, 3P
WW52	YU03440260	Jumper Lead, 3P

REF. DESIG.	PART NO.	DESCRIPTION
		PX04-SIG. METER/REMOTE RECEIVER CIRCUIT BOARD
PX04	YK349H1960	P.W. Board, Sig. Meter/Remote Receiver
CX01	DK18223310	Ceramic Cap. 0.022μF +80% −20%
DQ51	HI10061320	L.E.D. GL1HD111
DX01 ~ DX06	HI10050030	L.E.D. SLP151B-60
QQ51	HW10001550	Photo Unit
QX01	HC10065020	IC AN6875
QX02	HT10001000	Transistor 2SA608SP(F, G), etc.
QX03	HT30001000	Transistor 2SC536SP(F, G), etc.
SQ51	SP01011000	Push Switch, Standby
WQ51	YU04180260	Jumper Lead, 4P
WX01	YU06460260	Jumper Lead, 6P
		PX54-POWER METER FUNCTION IND. CIRCUIT BOARD
PX54	YK349H1640	P.W. Board, Power Meter Function Ind.
		PX54-RESISTORS
RU74	GG05103160	10KΩ ±5% 1/6W
RU78	GG05152140	1.5KΩ ±5% ¼W
		PX54-SEMICONDUCTORS
DU71	HI10034320	L.E.D. GL-9EG14
DU72	HI10034320	L.E.D. GL-9EG14
DU73	HI10034320	L.E.D. GL-9EG14
DU74	HI10034320	L.E.D. GL-9EG14
DU75	HI10028320	L.E.D. GL-9HD4
DU76	HI10028320	L.E.D. GL-9HD4
DU77	HI10028320	L.E.D. GL-9HD4
DX51 ~ DX64	HI10034320	L.E.D. GL-9EG14
QU71 ~ QU77	HT30001000	Transistor 2SC536SP(F, G), etc.
QX51	HC10013320	IC IR2E19
QX52	HC10013320	IC IR2E19
		PX54-MISCELLANEOUS
SU71	SP01011000	Push Switch, VCR21LV
SU72	SP01011000	Push Switch, CD
SU73	SP01011000	Push Switch, Tuner
SU74	SP01011000	Push Switch, Photo
WU71	YU08100260	Jumper Lead, 8P
WU72	YU06100260	Jumper Lead, 6P
WX51	YU04140260	Jumper Lead, 4P

REF. DESIG.	PART NO.	DESCRIPTION
		P104-TUNER CIRCUIT BOARD
P104	YK148H0210	P.W. Board, Tuner
		P104-CAPACITORS
CA01	DK18103310	Ceramic 0.01μF +80% −20%
CA02	CT12000090	Trimming 20pF
CA03	DK18223310	Ceramic 0.022μF +80% −20%
CA05	DK18103310	Ceramic 0.01μF +80% −20%
CA08	DF15391550	Film 390pF ±5%
CA19	DK18223310	Ceramic 0.022μF +80% −20%
CA22	DK18223310	Ceramic 0.022μF +80% −20%
CA24	DK18223310	Ceramic 0.022μF +80% −20%
CA26	DK18103310	Ceramic 0.01μF +80% −20%
CA27	DK18103310	Ceramic 0.01μF +80% −20%
CA29	DK18103310	Ceramic 0.01μF +80% −20%
CA31	DK18103310	Ceramic 0.01μF +80% −20%
CA33	DK18103310	Ceramic 0.01μF +80% −20%
CA37	DK18103310	Ceramic 0.01μF +80% −20%
CA43	DK18223310	Ceramic 0.022μF +80% −20%
C201	DK18103310	Ceramic 0.01μF +80% −20%
C202	DK18103310	Ceramic 0.01μF +80% −20%
C203	DK18223310	Ceramic 0.022μF +80% −20%
C204	DK18223310	Ceramic 0.022μF +80% −20%
C207	DK18223310	Ceramic 0.022μF +80% −20%
C209	DK18223310	Ceramic 0.022μF +80% −20%
C212	DK18473310	Ceramic 0.047μF +80% −20%
C213	DK18223310	Ceramic 0.022μF +80% −20%
C214	DK18223310	Ceramic 0.022μF +80% −20%
C215	DK18223310	Ceramic 0.022μF +80% −20%
C217	DK18223310	Ceramic 0.022μF +80% −20%
C219	DK18103310	Ceramic 0.01μF +80% −20%
C303	DF15471550	Film 470pF ±5%
C503	DK18103310	Ceramic 0.01μF +80% −20%
C507	DK18223310	Ceramic 0.022μF +80% −20%
		P104-RESISTORS
RA24	RA02230600	22KΩ, Trimming
RA43	NH05101140	100Ω ±5% ¼W, Fusible
R203	GG05101140	100Ω ±5% ¼W
R214	GG05101140	100Ω ±5% ¼W
R215	RA04730600	47KΩ, Trimming
R303	RA04720600	4.7KΩ, Trimming
R306	GG05181140	180Ω ±5% ¼W
R317	RA02240600	220KΩ, Trimming
		P104-SEMICONDUCTORS
DA01	HD40006030	Varicap SVC321SP
DA03	HD40006030	Varicap SVC321SP
DA09	HD20002000	Diode 1SS133, etc.
D201	HD20002000	Diode 1SS133, etc.
QA01	HF200551D0	F.E.T. 2SK55(D)
QA03	HC10058030	IC LA1245
QA09	HT10001000	Transistor 2SA608SP(F, G), etc.
Q201	HT308291C0	Transistor 2SC829(C)
Q202	HC10028030	IC LA1231N
Q203	HT30001000	Transistor 2SC536SP(F, G), etc.
Q204	HT30001000	Transistor 2SC536SP(F, G), etc.
Q205	HT30001000	Transistor 2SC536SP(F, G), etc.
Q206	HT10001000	Transistor 2SA608SP(F, G), etc.

REF. DESIG.	PART NO.	DESCRIPTION		
Q301	HC10046020	IC	AN7470	
Q302	HT10001000	Transistor	2SA608SP(F, G), etc.	
Q303	HT30001000	Transistor	2SC536SP(F, G), etc.	
Q304	HT30001000	Transistor	2SC536SP(F, G), etc.	
Q305	HT30001000	Transistor	2SC536SP(F, G), etc.	
Q501	HC10164030	IC	LM7000N	
Q503	HF200300B0	F.E.T.	2SK30A(Y1)	
Q504	HT30001000	Transistor	2SC536SP(F, G), etc.	
Q505	HT30001000	Transistor	2SC536SP(F, G), etc.	
		P104-MISCELLANEOUS		
A101	AV01202130	V.H.F. Tuner, FE306-A14		
FA01	FF10045320	Ceramic Filter, SFZ450F3L		
FA02	FF10045270	Ceramic Filter, BFU450C		
F201	FF11070610	Ceramic Filter, SFE10.7MA8-A		
F202	FF11070620	Ceramic Filter, SFE10.7MS3-A		
J101	YT01040290	Terminal, Antenna		
J203	YL01010110	Terminal, Earth Lug		
J204	YL01010110	Terminal, Earth Lug		
J205	YL01010110	Terminal, Earth Lug		
J206	YL01010110	Terminal, Earth Lug		
J304	YJ06002450	Jack, 6P		
LA01	LA10295140	Antenna Coil, AM		
LA02	LO10013170	OSC Coil, AM		
LA05	LI10013210	I.F.T. Coil, AM		
L201	LI20029040	I.F.T. Coil, FM DET		
W303	YU04240260	Jumper Lead, 4P		
W501	YU05420260	Jumper Lead, 5P		
W502	YU07460260	Jumper Lead, 7P		
X501	XI01150010	Crystal, 7.2MHz		
		P704-MAIN AMP/POWER SUPPLY CIRCUIT BOARD		
P704	YK349H1610	P.W. Board, Main Amp/Power Supply		
		P704-CAPACITORS		
CN01	EA47410010	Elect	0.47μF	100V
C717	EA10710010	Elect	100μF	100V
C718	EA10710010	Elect	100μF	100V
⚠C801	EB10908030	Elect	10000μF	80V
⚠C802	EB10908030	Elect	10000μF	80V
C809	DK18103560	Ceramic	0.01μF	+80% −20%
C810	DK18103560	Ceramic	0.01μF	+80% −20%
C811	DK18103310	Ceramic	0.01μF	+80% −20%
C812	DK18103310	Ceramic	0.01μF	+80% −20%
		P704-RESISTORS		
RK01	GG05820140	82Ω	±5%	¼W
RK03	GG05820140	82Ω	±5%	¼W
RK11	GP05102070	1KΩ	±5%	7W
RN18	GG05820140	82Ω	±5%	¼W
RX89	RA02220750	22KΩ(B), Trimming		
RX90	RA02220750	22KΩ(B), Trimming		

REF. DESIG.	PART NO.	DESCRIPTION		
R717	RA04710750	470Ω(B), Trimming		
R718	RA04710750	470Ω(B), Trimming		
R719 ~ R722	GG05221140	220Ω	±5%	¼W
R723	GG05221120	220Ω	±5%	½W
R724	GG05221120	220Ω	±5%	½W
R725 ~ R732	GG05022140	2.2Ω	±5%	½W
R733	BW10000020	0.33Ω×2	±5%	5W, Composite
R734	BW10000020	0.33Ω×2	±5%	5W, Composite
R735	BW10000020	0.33Ω×2	±5%	5W, Composite
R736	BW10000020	0.33Ω×2	±5%	5W, Composite
R737	GG05022120	2.2Ω	±5%	½W
R738	GG05022120	2.2Ω	±5%	½W
R739	GA05047030	4.7Ω	±5%	3W
R740	GA05047030	4.7Ω	±5%	3W
⚠R741	GA05151020	150Ω	±5%	2W [TA170AV]
	GA05181020	180Ω	±5%	2W [TA135AV]
⚠R742	GA05151020	150Ω	±5%	2W [TA170AV]
	GA05181020	180Ω	±5%	2W [TA135AV]
⚠R743	NF02270140	27Ω	±2%	¼W, Fuse[TA170AV]
	NF02470140	47Ω	±2%	¼W, Fuse[TA135AV]
⚠R744	NF02270140	27Ω	±2%	¼W, Fuse[TA170AV]
	NF02470140	47Ω	±2%	¼W, Fuse[TA135AV]
⚠R801	GA05271010	270Ω	±5%	1W
⚠R802	GA05121010	120Ω	±5%	1W
⚠R803	NH05121140	120Ω	±5%	¼W, Fusible
⚠R806	NH05100120	10Ω	±5%	½W, Fusible
⚠R807	NH05010120	1Ω	±5%	½W, Fusible
⚠R808	NH05010120	1Ω	±5%	½W, Fusible
⚠R809	GA05100030	10Ω	±5%	3W
⚠R810	NY05100140	10Ω	±5%	¼W, Fusible
		P704-SEMICONDUCTORS		
DK01	HD20002000	Diode	1SS133, etc.	
DN01	HD20003000	Diode	DSF10C, etc.	
DN02	HD20003000	Diode	DSF10C, etc.	
DN03	HD20004000	Diode		
DN04	HD20004000	Diode		
DX81	AD20002000	Diode	1SS133, etc.	
DX82	HD20002000	Diode	1SS133, etc.	
DX83	HD20002000	Diode	1SS133, etc.	
DX84	HD20002000	Diode	1SS133, etc.	
D701	HD20002000	Diode	1SS133, etc.	
D702	HD20002000	Diode	1SS133, etc.	
D751	HD20002000	Diode	1SS133, etc.	
D752	HD20002000	Diode	1SS133, etc.	
⚠D801	HE20012290	Diode	D5FB20	
⚠D802	HD20003000	Diode	DSF10C, etc.	
⚠D803	HD20003000	Diode	DSF10C, etc.	
⚠D804	HD20003000	Diode	DSF10C, etc.	
⚠D805	HD20003000	Diode	DSF10C, etc.	
D806	HD30005020	Zener	MA1056	
D807	HD30012020	Zener	MA1150	
D808	HD30015020	Zener	MA1240	
⚠D809	HD20003000	Diode	DSF10C, etc.	
⚠D810	HD20003000	Diode	DSF10C, etc.	
⚠D811	HD20003000	Diode	DSF10C, etc.	
⚠D812	HD20003000	Diode	DSF10C, etc.	

REF. DESIG.	PART NO.	DESCRIPTION	
		P704-SEMICONDUCTORS	
QK01	HW10004320	Photo Unit	PC-827
QK02	HT309452A0	Transistor	2SC945(P, Q)
QK03	HT325512A0	Transistor	2SC2551(R, O)
QK04	HT325512A0	Transistor	2SC2551(R, O)
QN01	HC10042050	IC	TA7317P
QN02	HT109701A0	Transistor	2SA970(GR)
QN03	HT322402A0	Transistor	2SC2240(GR, BL)
QN04	HT322402A0	Transistor	2SC2240(GR, BL)
⚠Q701	HC10141030	IC	STK3122-3 [TA170AV]
	HC10181030	IC	STK3102-3 [TA135AV]
Q703	HT309452A0	Transistor	2SC945(P, Q)
Q704	HT309452A0	Transistor	2SC945(P, Q)
⚠Q705	HT332982D0	Transistor	2SC3298(O, Y)
⚠Q706	HT332982D0	Transistor	2SC3298(O, Y)
⚠Q707	HT113062D0	Transistor	2SA1306(O, Y)
⚠Q708	HT113062D0	Transistor	2SA1306(O, Y)
⚠Q709	HT332802A0	Transistor	2SC3280(R, O)[TA170AV]
	HT331822A0	Transistor	2SC3182(R, O)[TA135AV]
⚠Q710	HT332802A0	Transistor	2SC3280(R, O)[TA170AV]
	HT331822A0	Transistor	2SC3182(R, O)[TA135AV]
⚠Q711	HT332802A0	Transistor	2SC3280(R, O)[TA170AV]
	HT331822A0	Transistor	2SC3182(R, O)[TA135AV]
⚠Q712	HT332802A0	Transistor	2SC3280(R, O)[TA170AV]
	HT331822A0	Transistor	2SC3182(R, O)[TA135AV]
⚠Q713	HT113012A0	Transistor	2SA1301(R, O)[TA170AV]
	HT112652A0	Transistor	2SA1265(R, O)[TA135AV]
⚠Q714	HT113012A0	Transistor	2SA1301(R, O)[TA170AV]
	HT112652A0	Transistor	2SA1265(R, O)[TA135AV]
⚠Q715	HT113012A0	Transistor	2SA1301(R, O)[TA170AV]
	HT112652A0	Transistor	2SA1265(R, O)[TA135AV]
⚠Q716	HT113012A0	Transistor	2SA1301(R, O)[TA170AV]
	HT112652A0	Transistor	2SA1265(R, O)[TA135AV]
Q751	HT413022B0	Transistor	2SD1302(S, T)
Q752	HT413022B0	Transistor	2SD1302(S, T)
Q753	HT10001000	Transistor	2SA608SP(F, G), etc.
Q754	HT30001000	Transistor	2SC536SP(F, G), etc.
⚠Q801	HC38515090	IC	NJM78M15A
		P704-MISCELLANEOUS	
JX01	YJ06002440	Jack, 4P	
J701	YT03080040	Terminal, 8P; SP. Out	
J703	YJ06002430	Jack, 3P	
J801	YJ06002440	Jack, 4P	
J809	YL01010110	Terminal, GND	
⚠LN01	LY20240150	Relay	
L701	LL23905120	Coil, 1μH	
L702	LL23905120	Coil, 1μH	
W701	YB00220230	Connective Cord	
W801	YU05200260	Jumper Lead, 5P	

REF. DESIG.	PART NO.	DESCRIPTION	
		P854-BACK-UP POWER SUPPLY CIRCUIT BOARD	
P854	YK349H1660	P.W. Board, Back-Up Power Supply	
		P854-CAPACITORS	
C851	DK18103310	Ceramic	0.01μF +80% −20%
C852	DK18103310	Ceramic	0.01μF +80% −20%
C853	DK18103840	Ceramic	0.01μF +100% 0, 400V
		P854-RESISTOR	
R851	GA05271020	270Ω ±5% 2W	
		P854-SEMICONDUCTORS	
⚠D851 ~ ⚠D856	HD20003000	Diode	DSF10C, etc.
D857	HD30005020	Zener	MA1056
⚠Q851	HC38515090	IC	NJM78M15
⚠Q852	HC39515090	IC	NJM79M15
Q853	HT30001000	Transistor	2SC536SP(F, G), etc.
Q854	HT30001000	Transistor	2SC536SP(F, G), etc.
Q855	HT10001000	Transistor	2SA608SP(F, G), etc.
Q856	HT30001000	Transistor	2SC536SP(F, G), etc.
Q857	HT10001000	Transistor	2SA608SP(F, G), etc.
Q858	HT30001000	Transistor	2SC536SP(F, G), etc.
		P854-MISCELLANEOUS	
J863	YJ06002440	Jack, 4P	
J864	YL01010110	Terminal, Ground	
⚠L851	LY10240130	Relay	
W851	YU03560260	Jumper Lead, 3P	

(W01-99)	Assembly and Wiring
(T01-99)	Adjustment
(X01-00)	Correction

NOTE ON SAFETY:
Symbol ⚠ Fire or electrical shock hazard. Only original parts should be used to replace any part marked with symbol ⚠. Any other component substitution (other than original type), may increase risk of fire or electrical shock hazard.

11. TECHNICAL SPECIFICATIONS

	Model TA135AV	Model TA170AV
AMPLIFIER SECTION:		
Rated Power Output, Minimum Continuous Watts per Channel, both Channels driven into 8 ohms	135 W/Channel	170 W/Channel
Power Bandwidth	20 Hz – 20 kHz	20 Hz – 20 kHz
Total Harmonic Distortion	0.05%	0.05%
I.M. Distortion	0.05%	0.05%
PREAMPLIFIER SECTION:		
Phono		
Input Overload at 1 kHz	120 mV	120 mV
High Level Inputs (Tuner, Tape, CD)		
Input Sensitivity/Impedance	150 mV/25 k ohms	150 mV/25 k ohms
TUNER SECTION:		
FM		
IHF Usable Sensitivity	12.1 dBf	12.1 dBf
Signal to Noise Ratio at 65 dBf (Mono/Stereo, 98 MHz)	75/64 dB	75/64 dB
Distortion at 65 dBf (Mono/Stereo, 1 kHz)	0.15%/0.3%	0.15%/0.3%
Stereo Separation at 1 kHz	42 dB	42 dB
Capture Ratio at 98 MHz	1.5 dB	1.5 dB
Frequency Response, 30 Hz – 15 kHz	±1 dB	±1 dB
Alternate Channel Selectivity	50 dB	50 dB
AM		
IHF Usable Sensitivity	20 μV	20 μV
Signal to Noise Ratio	50 dB	50 dB
Alternate Channel Selectivity	55 dB	55 dB
GENERAL:		
Power Requirements	120 V, 60 Hz	120 V, 60 Hz
Unit Dimensions		
Panel Width	420 mm (16-1/2 inches)	420 mm (16-1/2 inches)
Panel Height	185 mm (7-9/32 inches)	185 mm (7-9/32 inches)
Depth	320 mm (12-19/32 inches)	320 mm (12-19/32 inches)
Weight	13.5 kg (29.7 lbs)	15.5 kg (34.1 lbs)

Model TA135AV/TA170AV

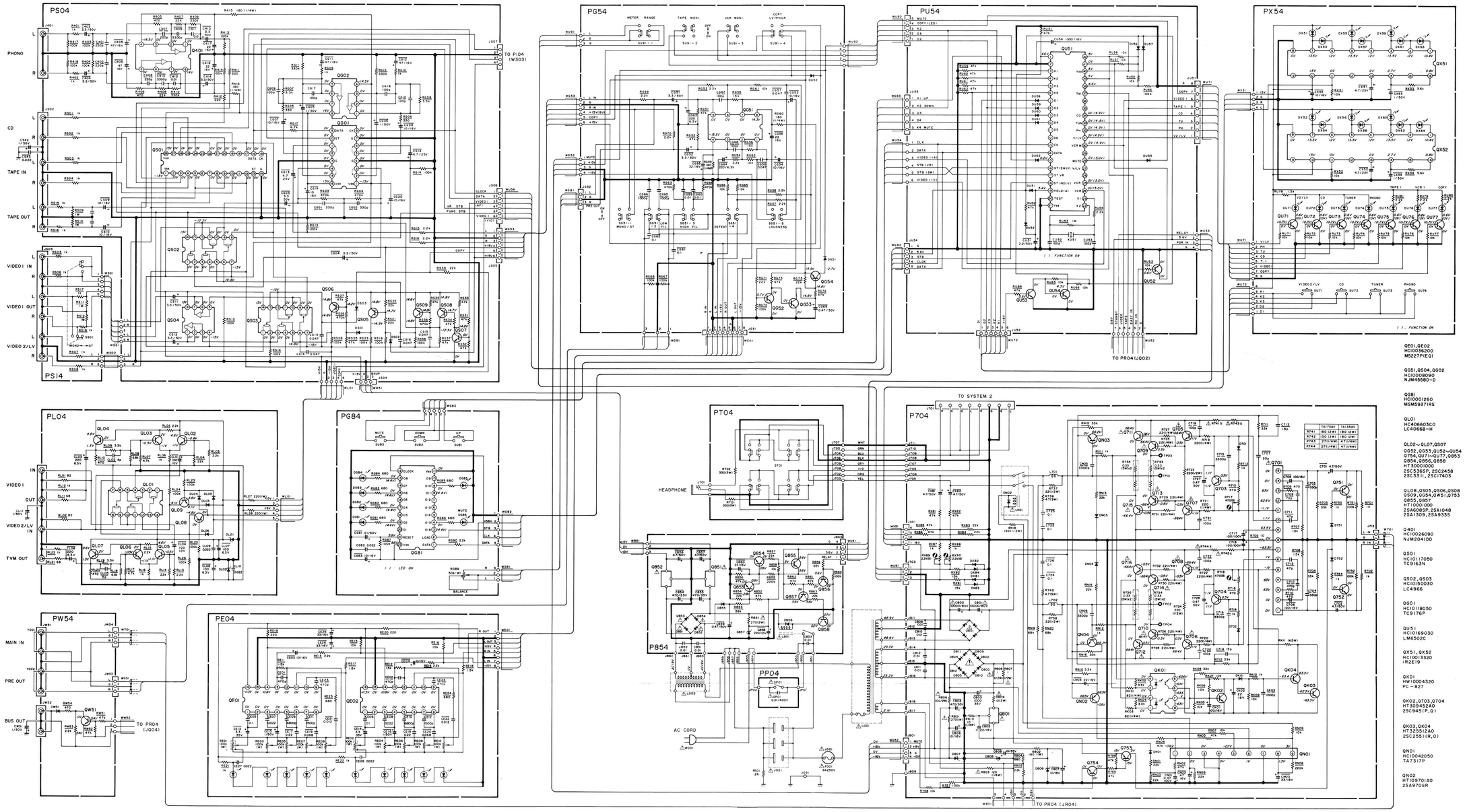

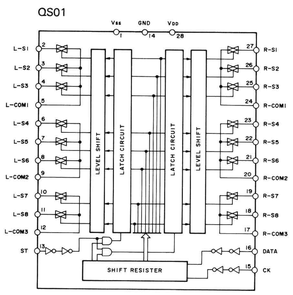

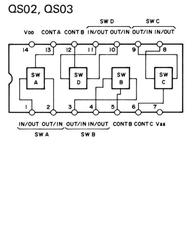

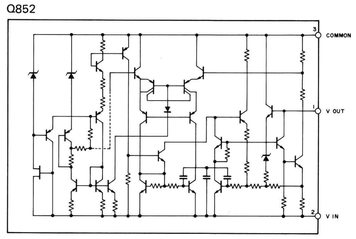

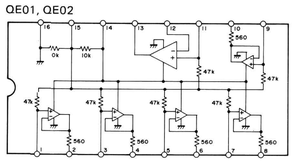

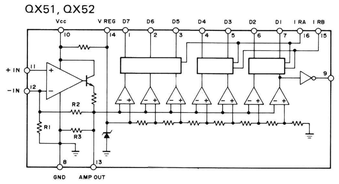

NOTE ON SAFETY :
Symbol ⚠ Fire or electrical shock hazard. Only original parts should be used to replace any part marked with symbol ⚠. Any other component substitution (other than original type), may increase risk of fire or electrical shock hazard.

Components and wiring are subject to change for modification without notice.

"SERVICE INFORMATION IS FOR USE BY QUALIFIED RERSONNEL ONLY – ANY MISADJUSTMENT OR MISALIGNMENT MAY BE TREATED AS A NON-WARRANTY REPAIR BY ANY MARANTZ SERVICE CENTRE – "

Kind of Common Parts

RESISTOR

R*** (1) GD05 - - - 140, Carbon film fixed resistor, ±5% 1/4W
R*** (2) GD05 - - - 160, Carbon film fixed resistor, ±5% 1/6W

C*** : **CERAMIC CAP.**
(1) DD1 - - - - 370, Ceramic condenser, disc type (titan condenser) Temp. coeff. P350 ~ N1000 50V

C*** : **CERAMIC CAP.**
(1) DK16 - - - 300, High dielectric constant ceramic condenser, disc type (titan variable) Temp. chara. 2B4 50V

C*** : **ELECTROLY CAP. (⇶) / FILM CAP. (⇌)**
(1) EA - - - - - - 10, Electrolytic condenser, one-way lead type, tolerance ±20%
(2) DF15 - - - 350, Plastic film condenser, one-way type, Mylar, ±5% 50V

* In case of ordering the common parts, please establish the correct parts number of 10 figures by the procedure "ASSIGNMENT OF COMMON PARTS CODES"

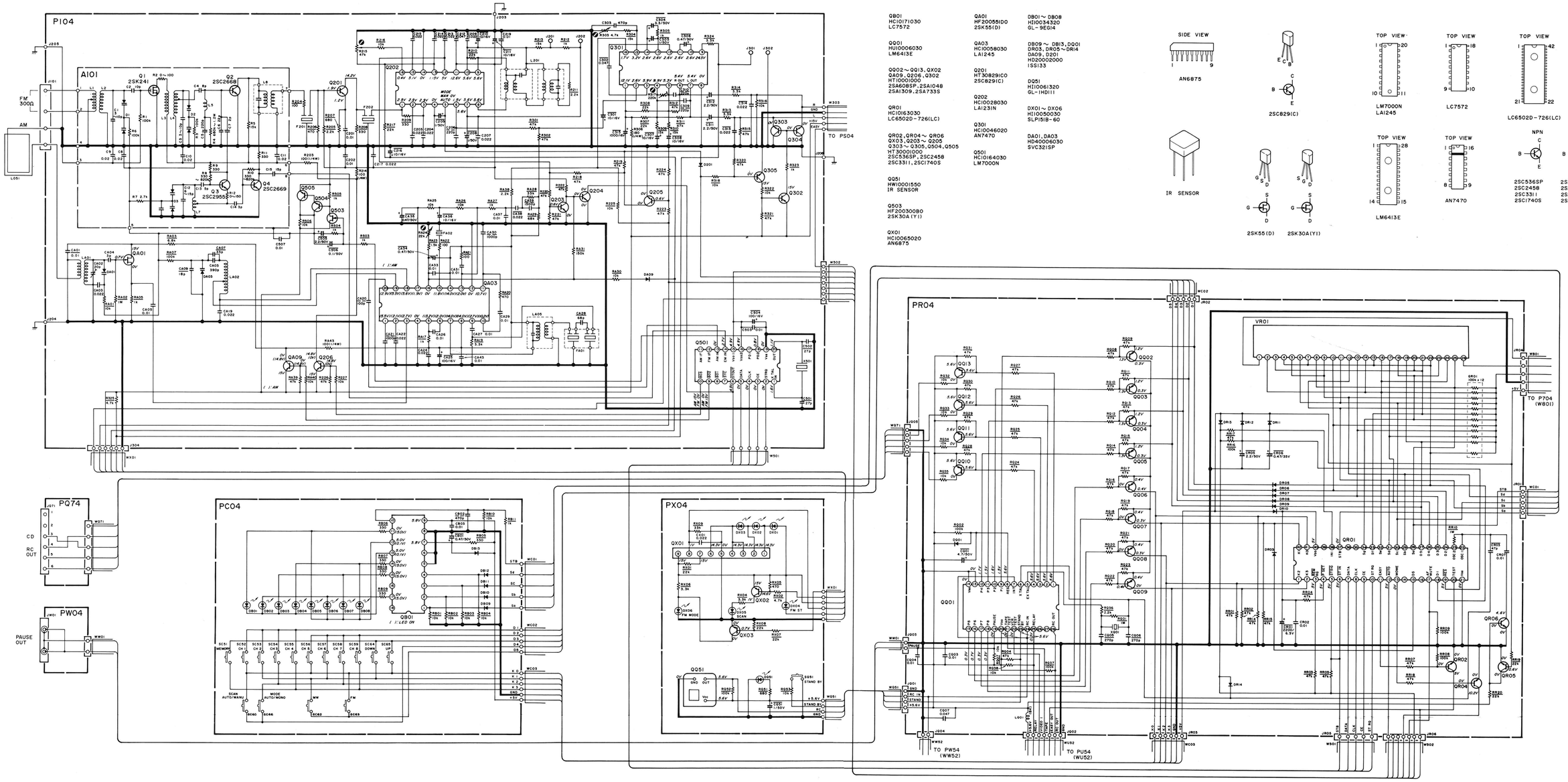

QB01
HC10171030
LC7572

QQ01
HU10006030
LM6413E

QQ02～QQ13, QX02
QA09, QQ06, QS02
HT10001000
2SA608SP, 2SA1048
2SA1309, 2SA733S

QR01
HC10163030
LC6502D-726(LC)

QR02, QR04～QR06
QX03, QQ03～QQ05
QS03～QS08, QS04, QS05
HT30001000
2SC536SP, 2SC2458
2SC3311, 2SC1740S

QQ51
HW10001550
IR SENSOR

QS03
HF200300B0
2SK30A(Y1)

QX01
HC10065020
AN6875

QA01
HF200551D0
2SK55(D)

QA03
HC10058030
LA1245

QQ01
HT30829IC0
2SC829(C)

QQ02
HC10028030
LA123IN

QQ30
HC10046020
AN7470

QS01
HC10164030
LM7000N

DB01～DB08
HI10034320
GL-9EG14

DB09～DB13, DQ01
DR03, DR05～DR14
DA09, DZ01
HD20002000
1SS133

DQ51
HI10061320
GL-1HD111

DX01～DX06
HI10050030
SLP151B-60

DA01, DA03
HD40006030
SVC321SP

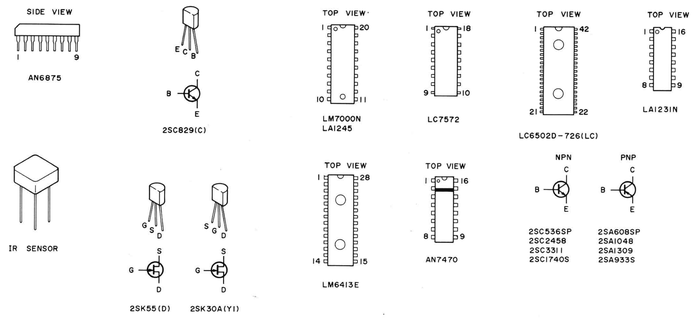

"SERVICE INFORMATION IS FOR USE BY QUALIFIED RERSONNEL ONLY – ANY MISADJUSTMENT OR MISALIGNMENT MAY BE TREATED AS A NON-WARRANTY REPAIR BY ANY MARANTZ SERVICE CENTRE – "

NOTE ON SAFETY :
Symbol ⚠ Fire or electrical shock hazard. Only original parts should be used to replace any part marked with symbol ⚠. Any other component substitution (other than original type), may increase risk of fire or electrical shock hazard.

Components and wiring are subject to change for modification without notice.

Kind of Common Parts

RESISTOR

R*** (1) GD05 - - - 140, Carbon film fixed resistor, ±5% 1/4W
R*** (2) GD05 - - - 160, Carbon film fixed resistor, ±5% 1/6W

C*** : **CERAMIC CAP.**
(1) DD1 - - - - 370, Ceramic condenser, disc type (titan condenser) Temp. coeff. P350 ～ N1000 50V

C*** : **CERAMIC CAP.**
(1) DK16 - - - 300, High dielectric constant ceramic condenser, disc type (titan variable) Temp. chara. 2B4 50V

C*** : **ELECTROLY CAP. (⧺) / FILM CAP. (⧦)**
(1) EA - - - - - - 10, Electrolytic condenser, one-way lead type, tolerance ±20%
(2) DF15 - - - 350, Plastic film condenser, one-way type, Mylar, ±5% 50V

* In case of ordering the common parts, please establish the correct parts number of 10 figures by the procedure "ASSIGNMENT OF COMMON PARTS CODES"

marantz®

Printed in Japan

349H855010 SO
1987/5