+VREG
-VREG
+VUNREG
-VUNREG
+VBUF
-VBUF
+VPREREG
-VPREREG
INGND
+ IN
-IN
OUTPUT
OUTPUTGND
TO OL-3
THERMAL SENSOR 1
THERMAL SENSOR 2
1/2-LM394
1/2-LM394
HEATSINK 1
HEATSINK 2

				TOLERANCES UNLESS SPECIFIED	MADRIGAL audio laboratories, inc.		
				FRACTIONS +-.010 DECIMAL +-.005 ANGLE +-1/2°	MATERIAL	SHEET	OF	SIZE D
				DR. A.H. DATE 4-9-89	USED IN NO-27	A B C D E		
				CH. R.A.S DATE 4-9-89	NAME AUDIO CHANNEL	NO. 75-3203-00-00-00		
ISSUE	REVISION	DATE	SCALE:				

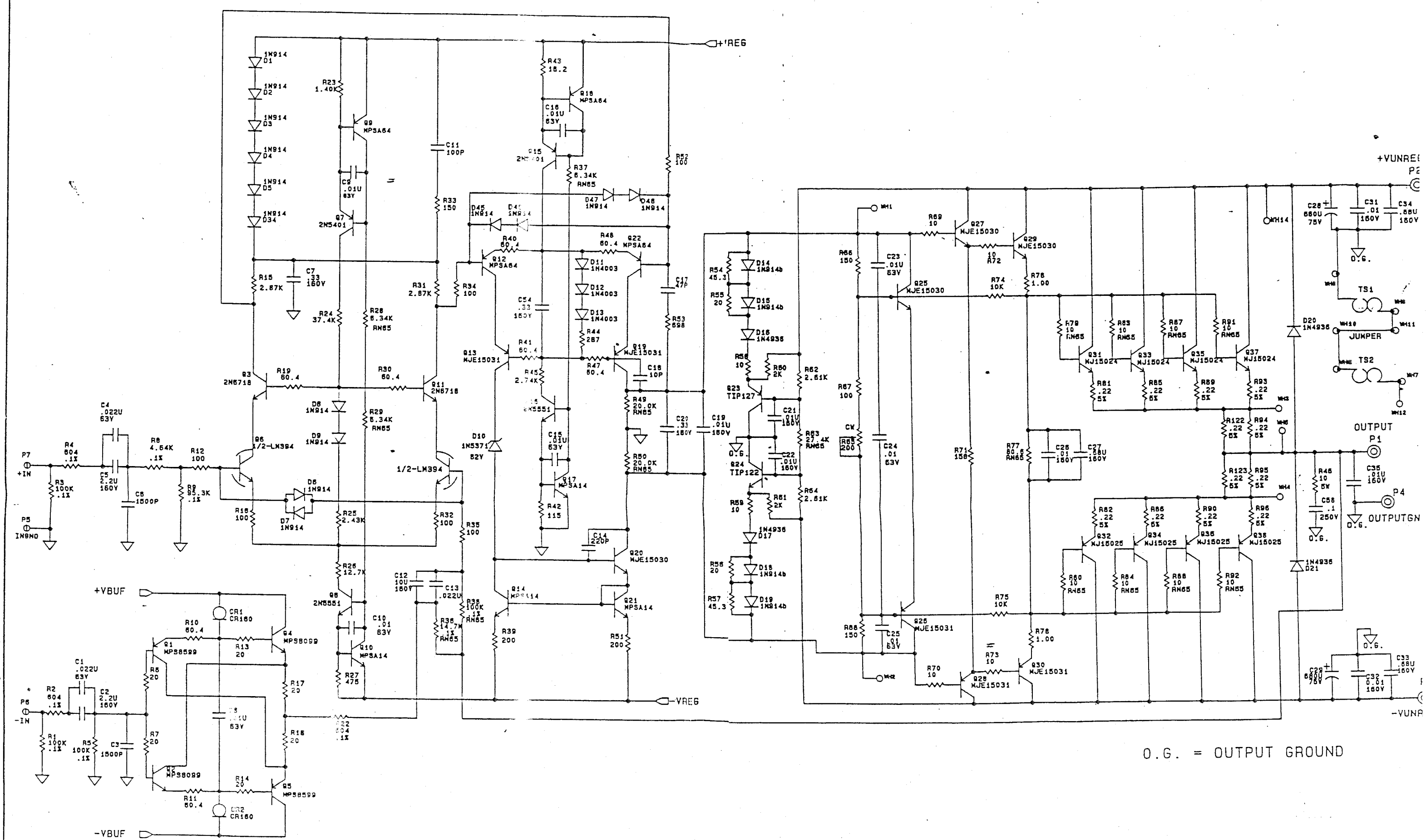

O.G. = OUTPUT GROUND

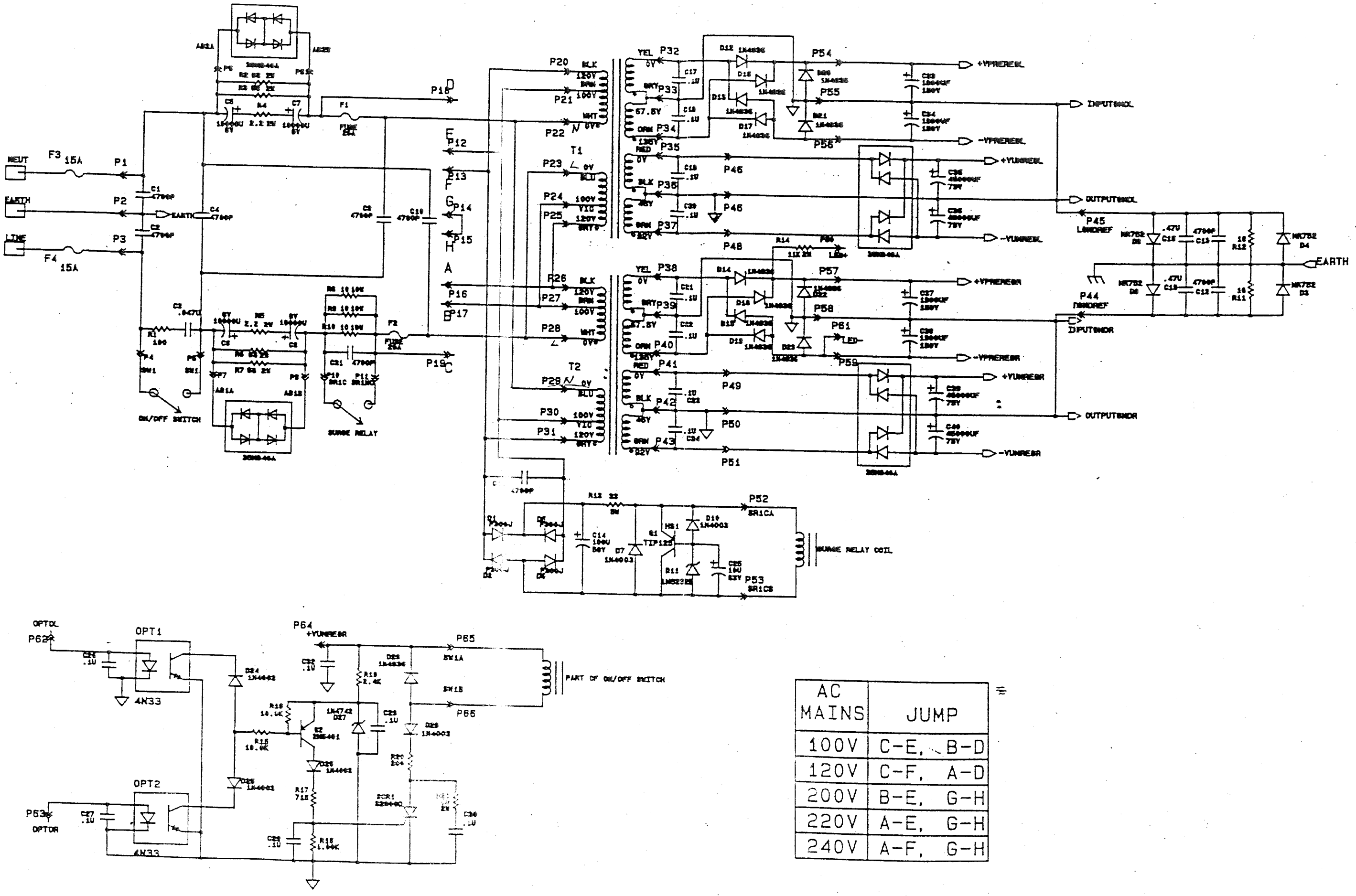

AC MAINS	JUMP
100V	C-E, B-D
120V	C-F, A-D
200V	B-E, G-H
220V	A-E, G-H
240V	A-F, G-H

VR5 & CHASSIS WIRING

OL-3 SCHEMATIC

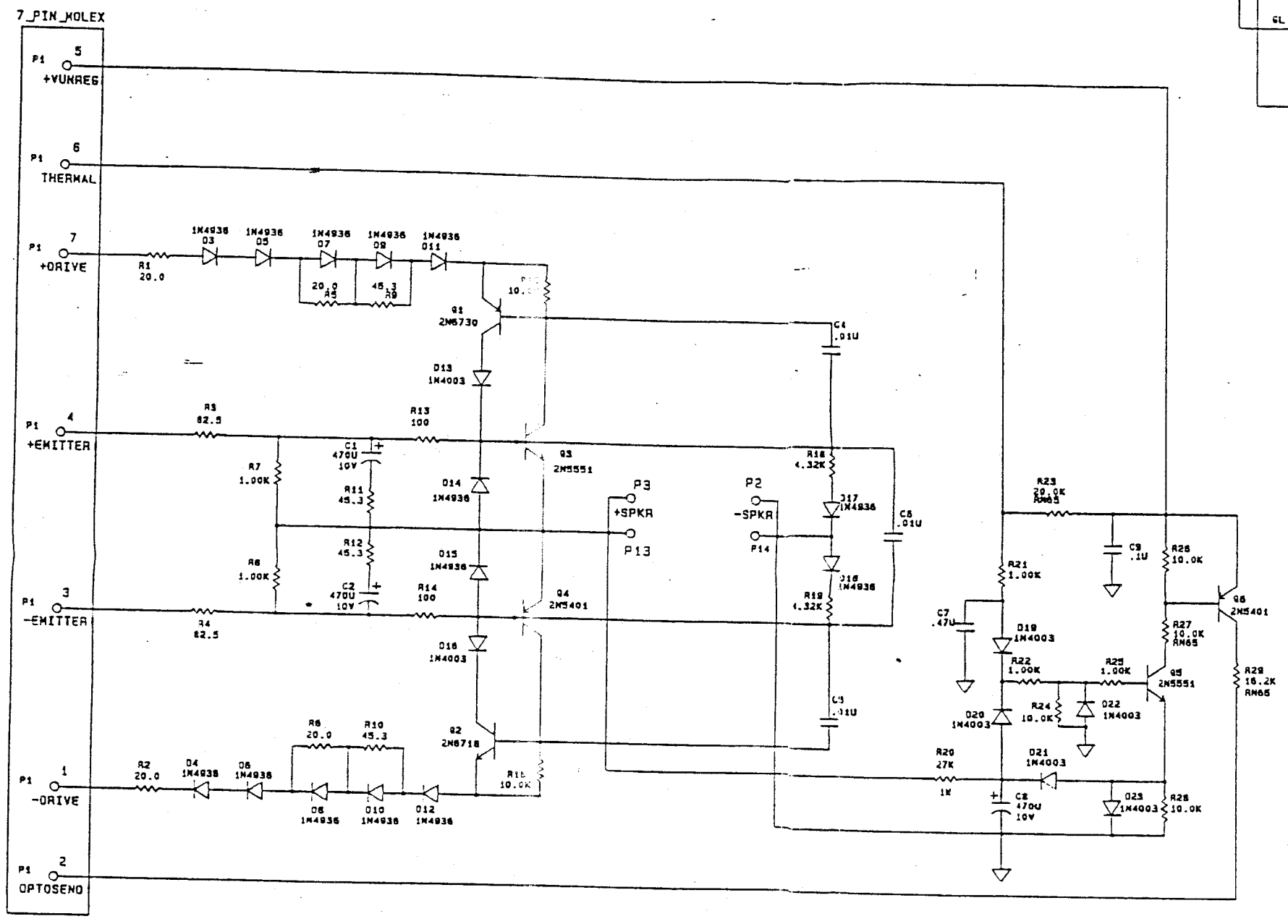

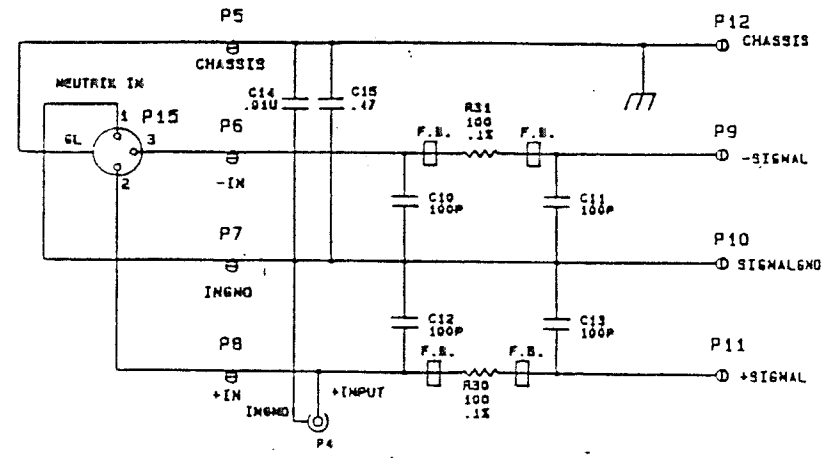

Regulator (Channel)

+VPREREG
P8
D45 1N914
D46 1N914
D47 1N914
D48 1N914
R106 10.0K RN65
R108 6.98K
R114 10.0 RN65
D28 1N4936
Q43 MJE15031
+VREG
R98 3.01K
R104 4.99K
D26 1N4936
R112 2K
C42 220P
Q41 2N6718
R116 3.09K GS3
+VBUF
R102 2.00K
Q39 2N6718
C36 .33U
C38 .01U
D22 1N4936
R99 4.99K
C40 22U 63V
D24 1N4753
R109 4.99K RN65
C44 680U 75V
C46 .33U
C48 .01U
1N4936 D30
C50 .01U
D32 1N963B
C52 68U 25V
P9
INPUTGND
INPUTGND
C51 .01U
D33 1N963B
C53 68U 25V
C41 22U 63V
D25 1N4753
R110 4.99K RN65
C45 680U 75V
C47 .33U
C49 .01U
D31 1N4936
R100 4.99K
C37 .33U
C39 .01U
1N4936
D23
2.00K R103
Q40 2N6730
Q42 2N6730
-VBUF
R117 3.09K GS3
R101 3.01K
C43 220P
R113 2K
R105 4.99K
D27 1N4936
-VREG
D49 1N914
HS7 MJE13008
Q44 MJE15030
D50 1N914
R111 6.98K
R115 10.0 RN65
D29 1N4936
R107 10.0K RN65
D51 1N914
D52 1N914
P10
-VPREREG

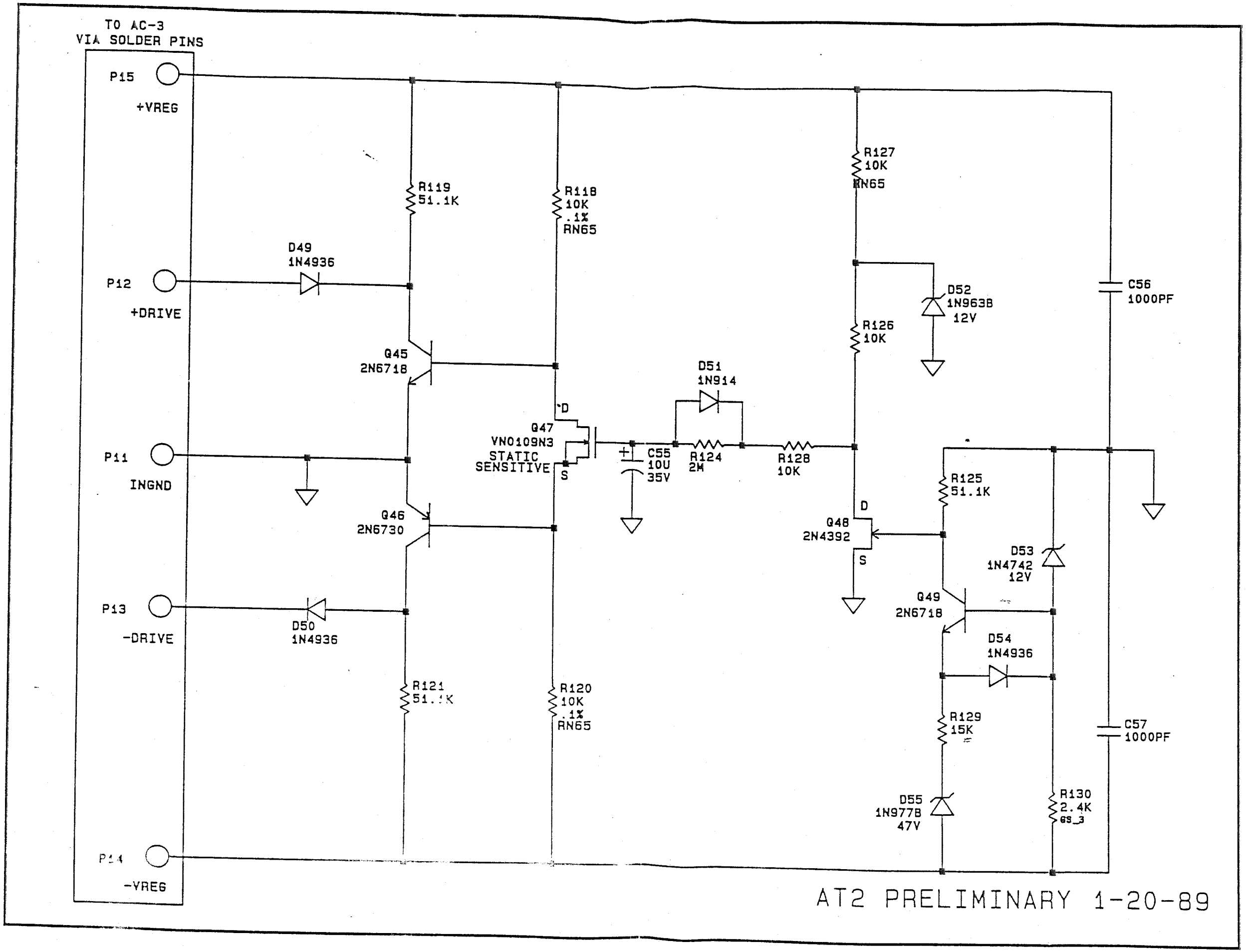

AT2 PRELIMINARY 1-20-89