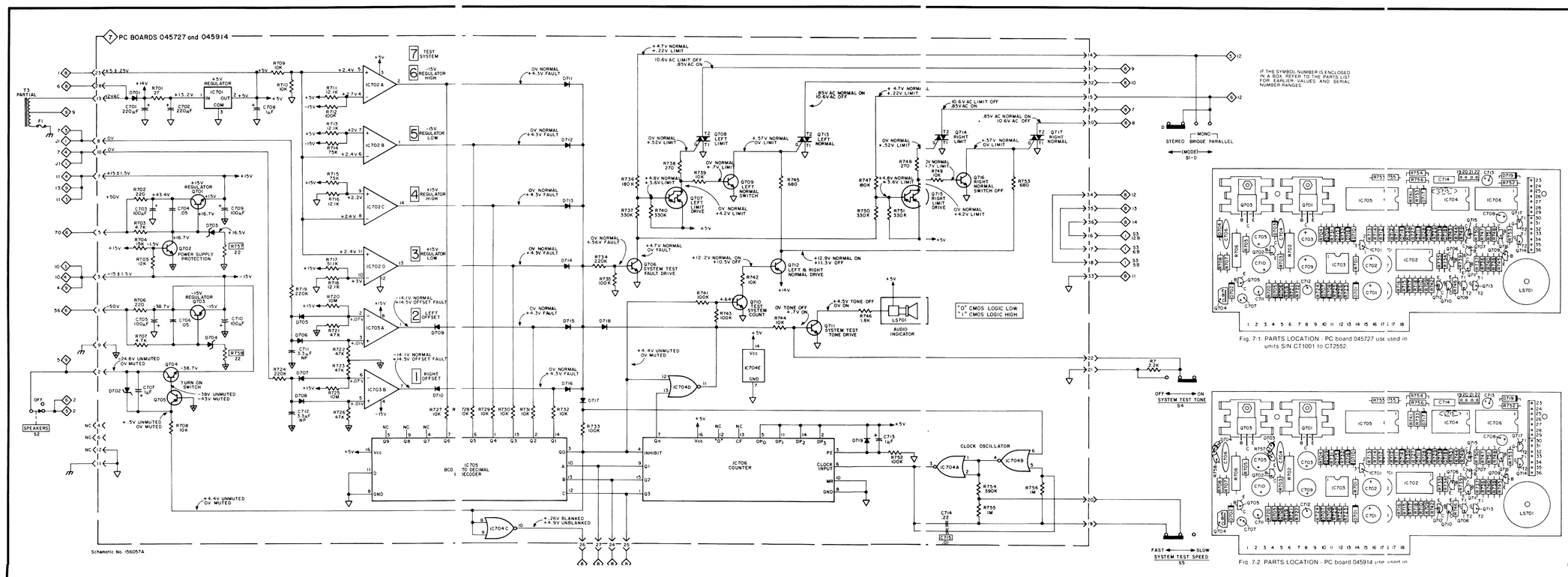

Fig. 7-1. PARTS LOCATION - PC board 045727 use used in units S/N CT1001 to CT2552.

Fig. 7-2. PARTS LOCATION - PC board 045914 use used in

SECTION 7 POWER SUPPLY, COUNTDOWN and POWER GUARDDISPLAY DRIVES

PARTS LIST

Symbol No. / Part No. / Description

CAPACITORS (CD = Ceramic Disc, ELECT = Electrolytic, MPE = Metalized Polyester)

C701	066330	ELECT, 220µF, 16V
C702	066330	ELECT, 220µF, 16V
C703	066353	ELECT, 100µF, 50V. . .(7486)
C704	061048	CD, .05µF, +80 −20%, 100V, Z5V
C705	066353	ELECT, 100µF, 50V. . .(7486)
C706	061048	CD, .05µF, +80 −20%, 100V, Z5V
C707	066242	ELECT, 1µF, 50V
C708	066242	ELECT, 1µF, 50V
C709	066353	ELECT, 100µF, 50V. . .(7486)
C710	066353	ELECT, 100µF, 50V. . .(7486)
*C711	066277	ELECT, 3.3µF, 20%, 50V, NP
*C712	066277	ELECT, 3.3µF, 20%, 50V, NP
C713	066242	ELECT, 1µF, 50V
C714	064190	MPE, .22µF, 5%, 63V
C715	061159	S/N CT2210 and above: CD, .01µF, +80 −20%, 50V. . .(7389)

DIODES (SIG = Signal, Si = Silicon, RECT = Rectifier, ZN = Zener)

*D701	070031	Si, RECT, 400 PIV, 1.5A
*D702	070065	Si, ZN, 24V, 5%, 1W
*D703	070114	Si, ZN, 16V, 5%, 500mW
*D704	070114	Si, ZN, 16V, 5%, 500mW
*D705	070047	Si, SIG, 75V, 10mA, IN4148
*D706	070047	Si, SIG, 75V, 10mA, IN4148
*D707	070047	Si, SIG, 75V, 10mA, IN4148
*D708	070047	Si, SIG, 75V, 10mA, IN4148
*D709	070047	Si, SIG, 75V, 10mA, IN4148
*D710	070047	Si, SIG, 75V, 10mA, IN4148
*D711	070047	Si, SIG, 75V, 10mA, IN4148
*D712	070047	Si, SIG, 75V, 10mA, IN4148
*D713	070047	Si, SIG, 75V, 10mA, IN4148
*D714	070047	Si, SIG, 75V, 10mA, IN4148
*D715	070047	Si, SIG, 75V, 10mA, IN4148
*D716	070047	Si, SIG, 75V, 10mA, IN4148
*D717	070047	Si, SIG, 75V, 10mA, IN4148
*D718	070047	Si, SIG, 75V, 10mA, IN4148
*D719	070047	Si, SIG, 75V, 10mA, IN4148

INTEGRATED CIRCUITS (AN = Analog, BP = Bipolar, DG = Digital, C-MOS = Complementary MOS)

*IC701	133093	AN, BP, Positive 5V Regulator, 78L05A
*IC702	133092	AN, BP, Quad Comparator, MLM339AP
*IC703	133028	AN, BP, Dual Hi-speed Operation Amp, MC-4558P
*IC704	133064	DG, C-MOS, Quad, 2 input NOR Gate, MC14001B
*IC705	133082	DG, C-MOS, BCD to Decimal Decoder, MC14028B
*IC706	133091	DG, C-MOS, Divide By N 4-Bit Counter, MC14526BCP

TRANSISTORS (DAR = Darlington, Si = Silicon)

*Q701	132174	Si, NPN, FT3055
*Q702	132143	Si, NPN, MPS-D05
*Q703	132173	Si, PNP, FT2955
*Q704	132149	Si, NPN, MPS-U07
*Q705	132147	Si, PNP, MPS-A93
*Q706	132143	Si, NPN, MPS-D05
*Q707	132182	Si, PNP, DAR, MPS-A64
*Q708	131011	Si, TRIAC, IB200-1
*Q709	132143	Si, NPN, MPS-D05
*Q710	132143	Si, NPN, MPS-D05
*Q711	132143	Si, NPN, MPS-D05
*Q712	132172	Si, PNP, MPS-A55. . .(7448)
*Q713	131011	Si, TRIAC, IB200-1
*Q714	131011	Si, TRIAC, IB200-1
*Q715	132182	Si, PNP, DAR, MPS-A64

RESISTORS (CF = Carbon Film, MF = Metal Film, FP = Flameproof)

R701	141146	CF, 27, 5%, 1/4W
*R702	139158	FP, 220Ω, 10%, 2W
R703	141064	CF, 4.7kΩ, 5%, 1/4W
R704	141076	CF, 15kΩ, 5%, 1/4W
R705	141074	CF, 12kΩ, 5%, 1/4W
*R706	139158	FP, 220Ω, 10%, 2W
R707	141064	CF, 4.7kΩ, 5%, 1/4W
R708	141072	CF, 10kΩ, 5%, 1/4W
*R709	144053	MF, 10kΩ, 1%, 1/4W
*R710	144053	MF, 10kΩ, 1%, 1/4W
*R711	144154	MF, 12.1kΩ, 1%, 1/4W
*R712	144113	MF, 100kΩ, 1%, 1/4W
*R713	144154	MF, 12.1kΩ, 1%, 1/4W
*R714	144156	MF, 75kΩ, 1%, 1/4W
*R715	144156	MF, 75kΩ, 1%, 1/4W
*R716	144154	MF, 12.1kΩ, 1%, 1/4W
*R717	144155	MF, 51.1kΩ, 1%, 1/4W
*R718	144154	MF, 12.1kΩ, 1%, 1/4W
*R719	141104	CF, 220kΩ, 5%, 1/4W
R720	136476	CC, 10MΩ, 10%, 1/4W
R721	141088	CF, 47kΩ, 5%, 1/4W
R722	141088	CF, 47kΩ, 5%, 1/4W
R723	141088	CF, 47kΩ, 5%, 1/4W
R724	141104	CF, 220kΩ, 5%, 1/4W
R725	136476	CC, 10MΩ, 10%, 1/4W
R726	141088	CF, 47kΩ, 5%, 1/4W
R727	141072	CF, 10kΩ, 5%, 1/4W
R728	141072	CF, 10kΩ, 5%, 1/4W
R729	141072	CF, 10kΩ, 5%, 1/4W
R730	141072	CF, 10kΩ, 5%, 1/4W
R731	141072	CF, 10kΩ, 5%, 1/4W
R732	141072	CF, 10kΩ, 5%, 1/4W
R733	141096	CF, 100kΩ, 5%, 1/4W
R734	141104	CF, 220kΩ, 5%, 1/4W
R735	141096	CF, 100kΩ, 5%, 1/4W
R736	141102	CF, 180kΩ, 5%, 1/4W
R737	141108	CF, 330kΩ, 5%, 1/4W
R738	141035	CF, 270Ω, 5%, 1/4W
R739	141072	CF, 10kΩ, 5%, 1/4W
R740	141108	CF, 330kΩ, 5%, 1/4W
R741	141096	CF, 100kΩ, 5%, 1/4W
R742	141072	CF, 10kΩ, 5%, 1/4W
R743	141096	CF, 100kΩ, 5%, 1/4W
R744	141072	CF, 10kΩ, 5%, 1/4W
R745	141045	CF, 680, 5%, 1/4W
R746	141055	CF, 1.8kΩ, 5%, 1/4W
R747	141102	CF, 180kΩ, 5%, 1/4W
R748	141035	CF, 270Ω, 5%, 1/4W
R749	141072	CF, 10kΩ, 5%, 1/4W
R750	141108	CF, 330kΩ, 5%, 1/4W
R751	141108	CF, 330kΩ, 5%, 1/4W
R752	141096	CF, 100kΩ, 5%, 1/4W
R753	141045	CF, 680, 5%, 1/4W
R754	141110	CF, 390kΩ, 5%, 1/4W
R755	141120	CF, 1MΩ, 5%, 1/4W
R756	141120	CF, 1MΩ, 5%, 1/4W
R757	141144	S/N CT2553 and above: CF, 22Ω, 5%, 1/4W. . .(7345)
R758	141144	S/N CT2553 and above: CF, 22Ω, 5%, 1/4W. . .(7345)

MISCELLANEOUS

*LS701	098195	Audio Transducer

* Parts marked with an asterisk (*) are replacement parts stocked by our Service Department and must be ordered from McIntosh. These parts must be ordered by part number. Parts not marked may be obtained from electronic parts suppliers

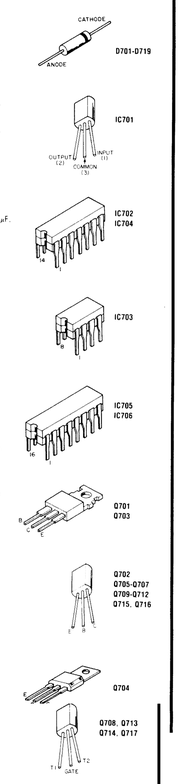

SECTION 8 POWER GUARD, COUNTDOWN and METER FUNCTION DISPLAYS

Fig. 8-1. PARTS LOCATION - PC board 045725.

PARTS LIST

Symbol No. / Part No. / Description

DIODES (SIG = Signal, Si = Silicon)

*D801	070047	Si, SIG, 75V, 10mA, IN4148

LIGHTING DEVICES (INC = Incandescent)

*DS801	058079	7-Segment Display, MAN72AB
*DS802	058061	INC, 14V, 80mA, 7382
*DS803	058061	INC, 14V, 80mA, 7382
*DS804	058062	INC, 6.3V, 200mA, 7381
*DS805	058062	INC, 6.3V, 200mA, 7381
*DS806	058062	INC, 6.3V, 200mA, 7381
*DS807	058062	INC, 6.3V, 200mA, 7381
*DS808	058062	INC, 6.3V, 200mA, 7381
*DS809	058061	INC, 14V, 80mA, 7382
*DS810	058061	INC, 14V, 80mA, 7382

INTEGRATED CIRCUITS (DG = Digital, TTL = Transistor-Transistor Logic)

*IC801	133090	DG, TTL, Seven Segment Decoder/latch/driver SN74LS47

RESISTORS (CF = Carbon Film)

R801	141037	CF, 330Ω, 5%, 1/4W
R802	141037	CF, 330Ω, 5%, 1/4W
R803	141037	CF, 330Ω, 5%, 1/4W
R804	141037	CF, 330Ω, 5%, 1/4W
R805	141037	CF, 330Ω, 5%, 1/4W
R806	141037	CF, 330Ω, 5%, 1/4W
R807	141037	CF, 330Ω, 5%, 1/4W
R808	141205	CF, 15Ω, 5%, 1/2W

* Parts marked with an asterisk (*) are replacement parts stocked by our Service Department and must be ordered from McIntosh. These parts must be ordered by part number. Parts not marked may be obtained from electronic parts suppliers

SECTION 2 INPUT LEVEL

Fig. 2-1. PARTS LOCATION - PC board 045723.

PARTS LIST

Symbol No. / Part No. / Description

CAPACITORS (CD = Ceramic Disc, ELECT = Electrolytic)

*C101	066302	ELECT, 2.2µF, 25V, NP
*C102	066302	ELECT, 2.2µF, 25V, NP
C103	061133	CD, 68pF, 10%, N750, CG
C104	061023	CD, 100pF, 10%, 500V, N1500

RESISTORS (MF = Metal Film)

*R101	144108	MF, 47.5K, 1%, 1/4W
*R102	144106	MF, 33.2K, 1%, 1/4W
*R103	144106	MF, 33.2K, 1%, 1/4W
*R104	144108	MF, 47.5K, 1%, 1/4W

SWITCHES

*S101	148053	Input Level Switch

* Parts marked with an asterisk (*) are replacement parts stocked by our Service Department and must be ordered from McIntosh. These parts must be ordered by part number. Parts not marked may be obtained from electronic parts suppliers.

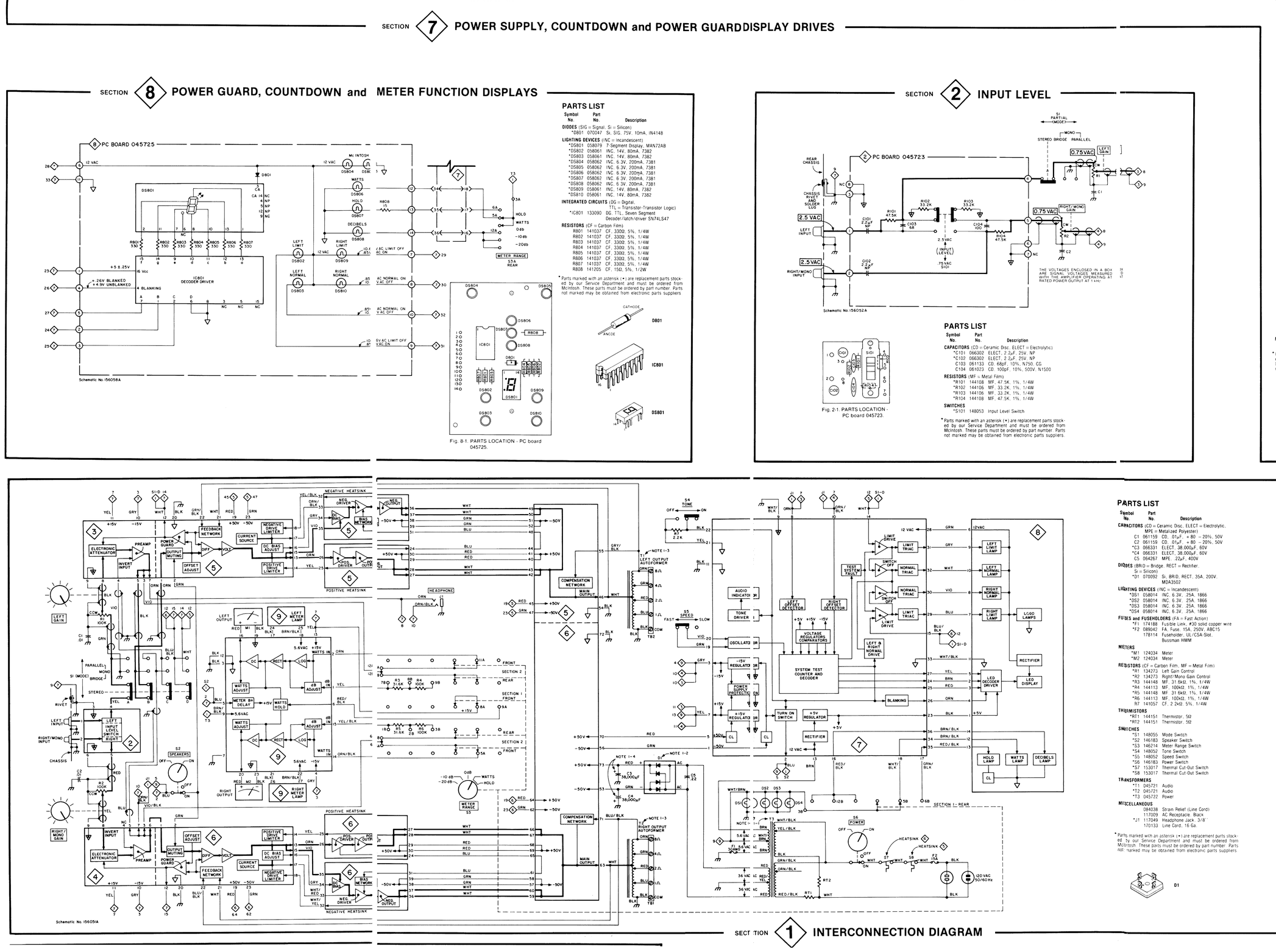

PARTS LIST

Symbol No. / Part No. / Description

CAPACITORS (CD = Ceramic Disc, ELECT = Electrolytic, MPE = Metalized Polyester)

C1	061159	CD, .01µF, +80 −20%, 50V
C2	061159	CD, .01µF, +80 −20%, 50V
*C3	066331	ELECT, 38,000µF, 60V
*C4	066331	ELECT, 38,000µF, 60V
C5	064267	MPE, .22µF, 400V

DIODES (BRID = Bridge, RECT = Rectifier, Si = Silicon)

*D1	070092	Si, BRID, RECT, 35A, 200V, MDA3502

LIGHTING DEVICES (INC = Incandescent)

*DS1	058014	INC, 6.3V, .25A, 1866
*DS2	058014	INC, 6.3V, .25A, 1866
*DS3	058014	INC, 6.3V, .25A, 1866
*DS4	058014	INC, 6.3V, .25A, 1866

FUSES and FUSEHOLDERS (FA = Fast Action)

*F1	174188	Fusible Link, #30 solid copper wire
*F2	089042	FA, Fuse, 15A, 250V, ABC15
	178114	Fuseholder, UL/CSA Slot, Bussman HMM

METERS

*M1	124034	Meter
*M2	124034	Meter

RESISTORS (CF = Carbon Film, MF = Metal Film)

*R1	134273	Left Gain Control
*R2	134273	Right/Mono Gain Control
*R3	144148	MF, 31.6kΩ, 1%, 1/4W
*R4	144113	MF, 100kΩ, 1%, 1/4W
*R5	144148	MF, 31.6kΩ, 1%, 1/4W
*R6	144113	MF, 100kΩ, 1%, 1/4W
R7	141057	CF, 2.2kΩ, 5%, 1/4W

THERMISTORS

*RT1	144151	Thermistor, 5Ω
*RT2	144151	Thermistor, 5Ω

SWITCHES

*S1	148055	Mode Switch
*S2	146183	Speaker Switch
*S3	146214	Meter Range Switch
*S4	148052	Tone Switch
*S5	148052	Speed Switch
*S6	146183	Power Switch
*S7	153017	Thermal Cut-Out Switch
*S8	153017	Thermal Cut-Out Switch

TRANSFORMERS

*T1	045721	Audio
*T2	045721	Audio
*T3	045722	Power

MISCELLANEOUS

	084038	Strain Relief (Line Cord)
	117009	AC Receptacle, Black
*J1	117049	Headphone Jack, 3/8"
	170133	Line Cord, 16 Ga.

* Parts marked with an asterisk (*) are replacement parts stocked by our Service Department and must be ordered from McIntosh. These parts must be ordered by part number. Parts not marked may be obtained from electronic parts suppliers.

NOTES

1-1. If the power transformer is suspected of a malfunction, the DC resistance of the windings must be checked before replacement. The measurements are made with the primary windings disconnected. Actual DC resistance measurements can vary by ±20%.

BRN to WHT/BRN	.046Ω
RED to RED/YEL	.033Ω
WHT/BLK to YEL/BLK	.056Ω
YEL/BLK to BLK	.025Ω
GRN/BLK to ORN/BLK	.056Ω
ORN/BLK to RED/BLK	.025Ω

1-2. When replacing bridge rectifier D1 make sure to apply a layer of heatsink compound (Dow Corning 340 or equivalent) to the metal bottom of the rectifier before installing on the heatsink.

1-3. If the autotransformer is suspected of a malfunction, the DC resistance of the windings must be checked before replacement. The measurements are made with all windings disconnected. Actual DC resistance measurements can vary by ±20%.

ORN to GRN	0.24Ω
GRN to RED	0.10Ω
RED to BLU	0.13Ω
BLU to WHT	0.36Ω
BLU to BLK	0.24Ω

1-4. WARNING! Filter capacitors C3 and C4 have high energy storage capacity. Before servicing, disconnect amplifier from AC line voltage and discharge both capacitors to chassis ground through a resistor.

SECTION 1 INTERCONNECTION DIAGRAM

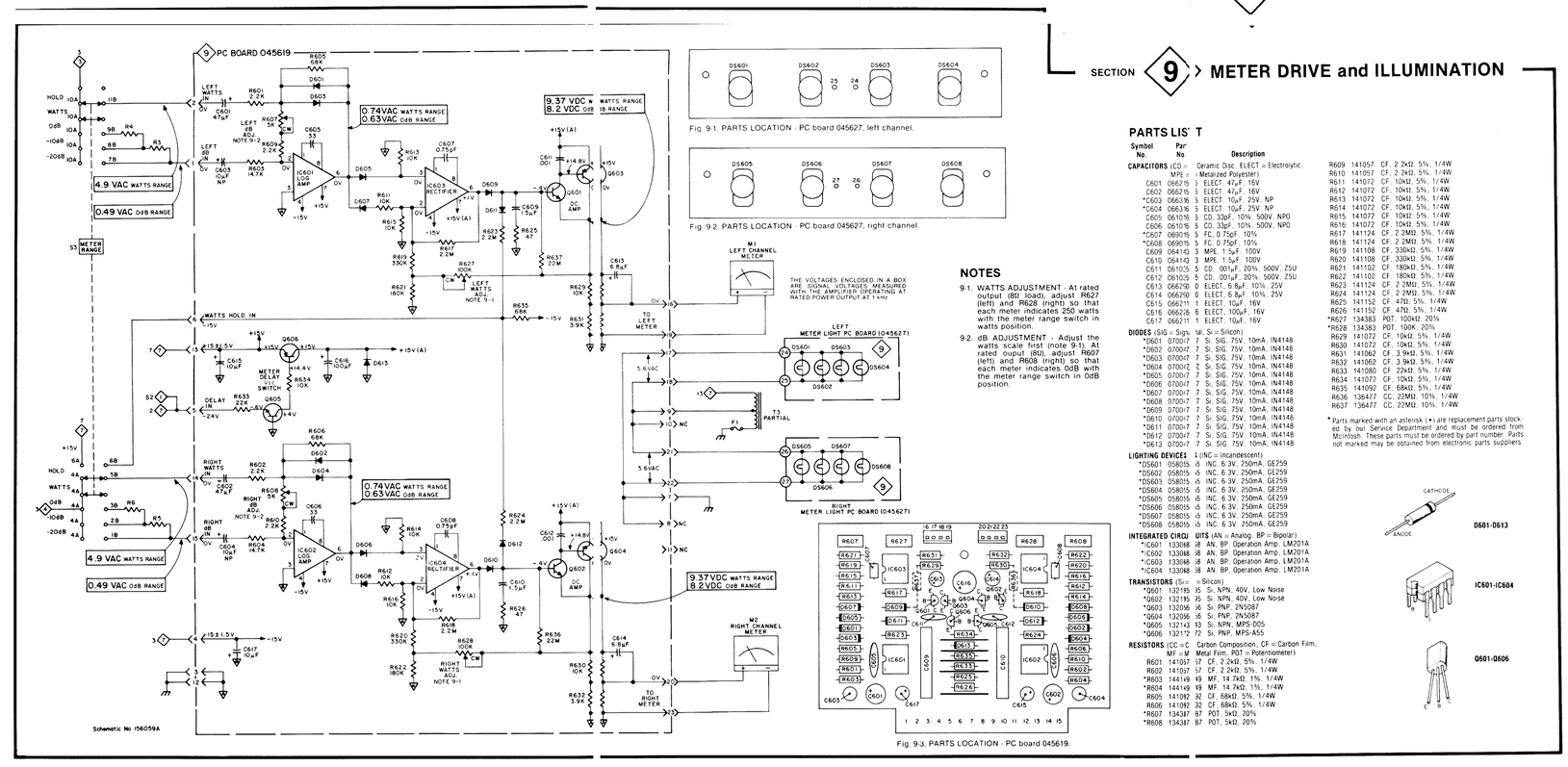

Fig. 9-1. PARTS LOCATION - PC board 045627, left channel.

Fig. 9-2. PARTS LOCATION - PC board 045627, right channel.

NOTES

9-1. WATTS ADJUSTMENT - At rated output (8Ω load), adjust R627 (left) and R628 (right) so that each meter indicates 250 watts with the meter range switch in watts position.

9-2. dB ADJUSTMENT - Adjust the watts scale first (note 9-1). At rated ouput (8Ω), adjust R607 (left) and R608 (right) so that each meter indicates 0dB with the meter range switch in 0dB position.

Fig. 9-3. PARTS LOCATION - PC board 045619.

SECTION 9 METER DRIVE and ILLUMINATION

PARTS LIS' T

Symbol No. / Par- No / Description

CAPACITORS (CD = Ceramic Disc, ELECT = Electrolytic, MPE = Metalized Polyester)

C601	066276	3, ELECT, 47µF, 16V
C602	066276	3, ELECT, 47µF, 16V
*C603	066336	3, ELECT, 10µF, 25V, NP
*C604	066336	3, ELECT, 10µF, 25V, NP
C605	061016	3, CD, 33pF, 10%, 500V, NPO
C606	061016	3, CD, 33pF, 10%, 500V, NPO
*C607	069015	5, FC, 0.75pF, 10%
*C608	069015	5, FC, 0.75pF, 10%
C609	064143	3, MPE, 1.5µF, 100V
C610	064143	3, MPE, 1.5µF, 100V
C611	061025	5, CD, .001µF, 20%, 500V, Z5U
C612	061025	5, CD, .001µF, 20%, 500V, Z5U
C613	066290	0, ELECT, 6.8µF, 10%, 25V
C614	066290	0, ELECT, 6.8µF, 10%, 25V
C615	066211	1, ELECT, 10µF, 16V
C616	066226	6, ELECT, 100µF, 16V
C617	066211	1, ELECT, 10µF, 16V

DIODES (SIG = Signal, Si = Silicon)

*D601	070047	7, Si, SIG, 75V, 10mA, IN4148
*D602	070047	7, Si, SIG, 75V, 10mA, IN4148
*D603	070047	7, Si, SIG, 75V, 10mA, IN4148
*D604	070047	7, Si, SIG, 75V, 10mA, IN4148
*D605	070047	7, Si, SIG, 75V, 10mA, IN4148
*D606	070047	7, Si, SIG, 75V, 10mA, IN4148
*D607	070047	7, Si, SIG, 75V, 10mA, IN4148
*D608	070047	7, Si, SIG, 75V, 10mA, IN4148
*D609	070047	7, Si, SIG, 75V, 10mA, IN4148
*D610	070047	7, Si, SIG, 75V, 10mA, IN4148
*D611	070047	7, Si, SIG, 75V, 10mA, IN4148
*D612	070047	7, Si, SIG, 75V, 10mA, IN4148
*D613	070047	7, Si, SIG, 75V, 10mA, IN4148

LIGHTING DEVICES (INC = Incandescent)

*DS601	058015	5, INC, 6.3V, .250mA, GE259
*DS602	058015	5, INC, 6.3V, .250mA, GE259
*DS603	058015	5, INC, 6.3V, .250mA, GE259
*DS604	058015	5, INC, 6.3V, .250mA, GE259
*DS605	058015	5, INC, 6.3V, .250mA, GE259
*DS606	058015	5, INC, 6.3V, .250mA, GE259
*DS607	058015	5, INC, 6.3V, .250mA, GE259
*DS608	058015	5, INC, 6.3V, .250mA, GE259

INTEGRATED CIRCUITS (AN = Analog, BP = Bipolar)

*IC601	133068	8, AN, BP, Operation Amp, LM201A
*IC602	133068	8, AN, BP, Operation Amp, LM201A
*IC603	133068	8, AN, BP, Operation Amp, LM201A
*IC604	133068	8, AN, BP, Operation Amp, LM201A

TRANSISTORS (Si = Silicon)

*Q601	132195	35, Si, NPN, 40V, Low Noise
*Q602	132195	35, Si, NPN, 40V, Low Noise
*Q603	132096	36, Si, PNP, 2N5087
*Q604	132096	36, Si, PNP, 2N5087
*Q605	132143	13, Si, NPN, MPS-D05
*Q606	132172	72, Si, PNP, MPS-A55

RESISTORS (CC = Carbon Compositon, CF = Carbon Film, MF = Metal Film, POT = Potentiometer)

R601	141057	57, CF, 2.2kΩ, 5%, 1/4W
R602	141057	57, CF, 2.2kΩ, 5%, 1/4W
*R603	144149	49, MF, 14.7kΩ, 1%, 1/4W
*R604	144149	49, MF, 14.7kΩ, 1%, 1/4W
R605	141092	92, CF, 68kΩ, 5%, 1/4W
R606	141092	92, CF, 68kΩ, 5%, 1/4W
*R607	134387	87, POT, 5kΩ, 20%
*R608	134387	87, POT, 5kΩ, 20%
R609	141057	CF, 2.2kΩ, 5%, 1/4W
R610	141057	CF, 2.2kΩ, 5%, 1/4W
R611	141072	CF, 10kΩ, 5%, 1/4W
R612	141072	CF, 10kΩ, 5%, 1/4W
R613	141072	CF, 10kΩ, 5%, 1/4W
R614	141072	CF, 10kΩ, 5%, 1/4W
R615	141072	CF, 10kΩ, 5%, 1/4W
R616	141072	CF, 10kΩ, 5%, 1/4W
R617	141124	CF, 2.2MΩ, 5%, 1/4W
R618	141124	CF, 2.2MΩ, 5%, 1/4W
R619	141108	CF, 330kΩ, 5%, 1/4W
R620	141108	CF, 330kΩ, 5%, 1/4W
R621	141102	CF, 180kΩ, 5%, 1/4W
R622	141102	CF, 180kΩ, 5%, 1/4W
R623	141124	CF, 2.2MΩ, 5%, 1/4W
R624	141124	CF, 2.2MΩ, 5%, 1/4W
R625	141152	CF, 47Ω, 5%, 1/4W
R626	141152	CF, 47Ω, 5%, 1/4W
*R627	134383	POT, 100kΩ, 20%
*R628	134383	POT, 100K, 20%
R629	141072	CF, 10kΩ, 5%, 1/4W
R630	141072	CF, 10kΩ, 5%, 1/4W
R631	141062	CF, 3.9kΩ, 5%, 1/4W
R632	141062	CF, 3.9kΩ, 5%, 1/4W
R633	141080	CF, 22kΩ, 5%, 1/4W
R634	141072	CF, 10kΩ, 5%, 1/4W
R635	141092	CF, 68kΩ, 5%, 1/4W
R636	136477	CC, 22MΩ, 10%, 1/4W
R637	136477	CC, 22MΩ, 10%, 1/4W

* Parts marked with an asterisk (*) are replacement parts stocked by our Service Department and must be ordered from McIntosh. These parts must be ordered by part number. Parts not marked may be obtained from electronic parts suppliers

INSTALLATION HARDWARE

Part No.	Description
*044871	Hardware Pkg.
*043677	Mounting Strips
*038244	Mounting Template
*043678	Panloc Shelf Bracket, Right
*043679	Panloc Shelf Bracket, Left
*017218	Plastic Feet, Secure w/101072 Screws
*101072	Sheetmetal Screw, #8 x 3/4, Phillips, black

FRONT PANEL and TRIM

Part No.	Description
*045736	Front Panel, Complete
*045739	Front Panel, Glass
*018173	End Cap, Secure w/101042 Screws
*045740	Bezel, w/Adhesive
*090156	Left Gain Knob
*090156	Right/Mono Gain Knob
*090170	Meter Range Knob
*090156	Speaker Knob
*090156	Power Knob
*018155	Top Panel Rail, Secure w/100007 Screws
*018155	Bottom Panel Rail, Secure w/100103 Screws
*101054	Tapping Screws, 6-32 x 1/4, philips, black
*104017	Felt Washers, Knobs
*101042	Tapping Screw, 4-40 x 1/2, flister head
*100007	Machine Screw, 6-32 x 1/4
*100103	Machine Screw, 6-32 x 1/8

SHIPPING CARTON

Part No.	Description
*033241	Shipping Skid
*033368	Shipping Carton only
101034	10x2" Screw (3 required for mounting skid)
104033	10x 1¼" Flat Washer (3 used with 101034 screws)
*045758	Shipping Carton, Complete

MC 2255

Stereo Power Amplifier

Schematics

039401

Sheet 1 of 2

McIntosh

This sheet includes sections

1 INTERCONNECTION DIAGRAM

2 INPUT LEVEL

7 POWER SUPPLY, COUNTDOWN and POWER GUARD DISPLAY DRIVES

8 POWER GUARD, COUNTDOWN and METER FUNCTION DISPLAYS

9 METER DRIVE and ILLUMINATION

The continuous improvement of its products is the policy of McIntosh Laboratory Incorporated, who reserve the right to improve design without notice. Because of the constant upgrading of McIntosh products' circuitry and components, the Company cannot insure, and does not warrant, the accuracy of the within schematic material, which is intended for information only.

McIntosh Laboratory Inc. 2 Chambers Street, Binghamton, NY 13903-9990

Printed in U.S.A. Telephone (607)723-3512 Part No. 039401

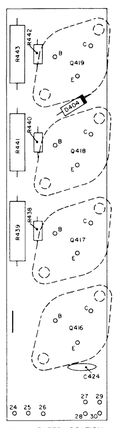

Fig. 5-4. PARTS LOCATION - PC board 045728, positive heatsink.

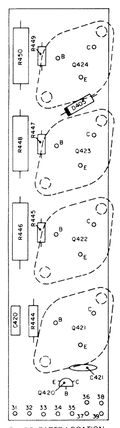

Fig. 5-5. PARTS LOCATION - PC board 045729, negative heatsink.

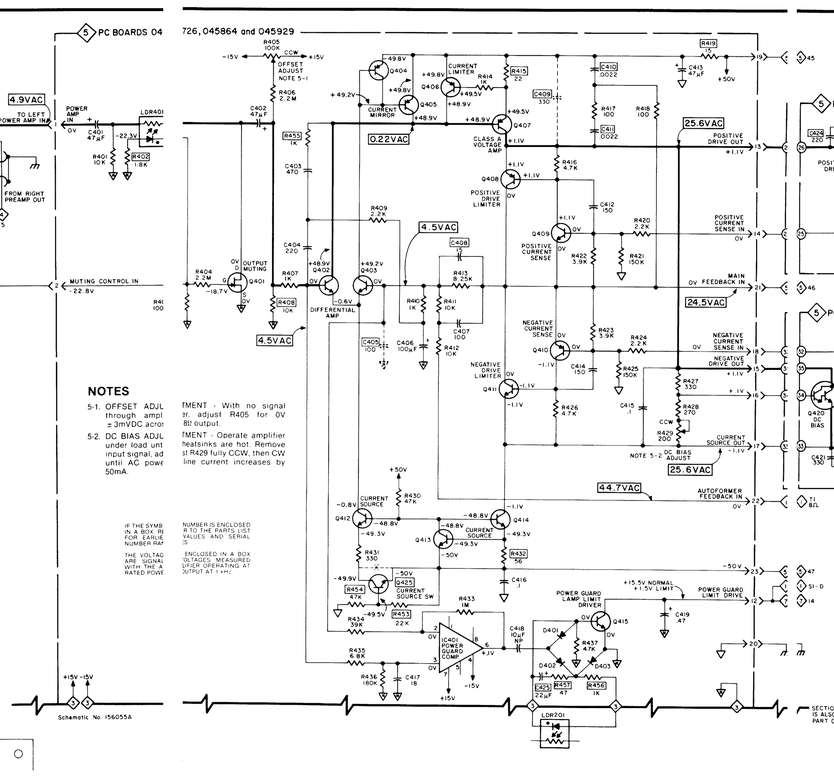

NOTES

5-1. OFFSET ADJUSTMENT - With no signal applied, adjust R405 for 0V ± 3mVDC across 8Ω output.

5-2. DC BIAS ADJUSTMENT - Operate amplifier under load until heatsinks are hot. Remove signal, adjust R429 fully CCW, then CW until AC power line current increases by 50mA.

IF THE SYMBOL NUMBER IS ENCLOSED IN A BOX, REFER TO THE PARTS LIST FOR EARLIER VALUES AND SERIAL NUMBER RANGES.

THE VOLTAGES ENCLOSED IN A BOX ARE SIGNAL VOLTAGES MEASURED WITH THE AMPLIFIER OPERATING AT RATED POWER OUTPUT AT 1 kHz.

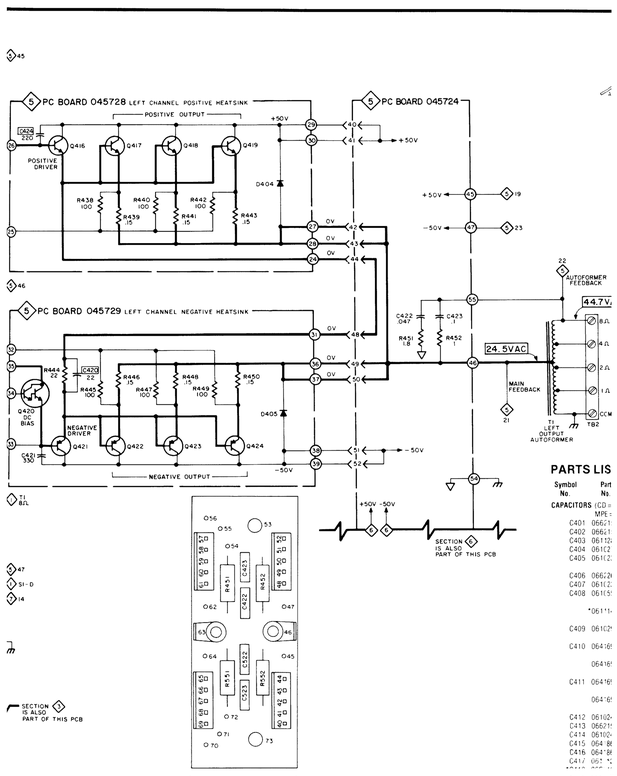

Fig. 5-6. PARTS LOCATION - PC board 045724.

PARTS LIS

Symbol No.	Part No.	Description
CAPACITORS (CD = MPE:		
C401	0661	
C402	0661	
C403	0661	
C404	0617	
C405	0617	
C406	0662	
C407	0617	
C408	0615	
	*0611	
C409	0610	
C410	0641	
	0641	
C411	0649	
	0641	
C412	0610	
C413	0662	
C414	0610	
C415	0641	
C416	0641	
C417	067	
*C418	066	398-ohm ELECT. 10µF, 25V, NP
C419	066	398-044 ELECT. 47µF, 50V
		39 S/N CT1001 to CT2701: PF. 0047µF, 5%, 100V...(7385)
		35 S/N CT2702 and above: PF. .0022µF, 5%, 100V ...(7385)
		34 CD. 150pF, 10%, 500V, Z5F
		15 ELECT. 47µF, 16V
		14 CD. 150pF, 10%, 500V, Z5F
		38 MPE. .1µF, 5%, 63V
		38 MPE. .1µF, 5%, 63V
		12 CD. 18pF, 10%, 500V, NPO
		16 ELECT. 10µF, 25V, NP
		14 ELECT. 47µF, 50V
		34 S/N CT1001 to CT2701: MPE. 0.1µF, 10%, 63V ...(7385)
		30 S/N CT2702 and above: MPE. 0.22µF, 5%, 63V ...(7385)
		35 CD. 330pF, 10%
		34 MPE. .047µF, 10%, 63V
		34 MPE. .1µF, 10%, 63V
		27 S/N CT1087 and above: CD. 220pF, 10%, 500V, Z5F ...(7167)
		4 S/N CT3264 and above: ELECT. 22µF, 6V ...(7418)
		67 SIG = Signal, RECT = Rectifier)
		42 Si. SIG. 75V, 10mA, IN4148
		42 Si. SIG. 75V, 10mA, IN4148
		42 Si. SIG. 75V, 10mA, IN4148
		31 Si. RECT. 400 PIV, 1.5A
		31 Si. RECT. 400 PIV, 1.5A
DIODES (Si = Silicon, STAB = Stabistor)		
		6 AN, BP, Operation Amp. NE-5534AN
TRANSISTORS		
		5 LDR, CLM6500

TRANSISTORS (DAR = Darlington, J-FET = Junction FET, Si = Silicon, N = N Channel)

*Q501	132193	Si, N, J-FET, 2N4392
*Q502	132185	Si, NPN, 2N6429A
*Q503	132185	Si, NPN, 2N6429A
*Q504	132150	S/N CT1001 to CT3000: Si, PNP, MPS-055...(7440)
	132056	S/N CT3001 and above: Si, PNP, 2N5087 ...(7440)
*Q505	132150	S/N CT1001 to CT3400: Si, PNP, MPS-055...(7448)
	132172	S/N CT3401 and above: Si, PNP, MPS-A55...(7448)
*Q506	132150	S/N CT1001 to CT3000: Si, PNP, MPS-055...(7440)
	132056	S/N CT3001 and above: Si, PNP, 2N5087 ...(7440)
*Q507	132194	Si, PNP, NDS-057
*Q508	132150	S/N CT1001 to CT3400: Si, PNP, MPS-055...(7448)
	132172	S/N CT3401 and above: Si, PNP, MPS-A55...(7448)
*Q509	132143	Si, NPN, MPS-005
*Q510	132150	S/N CT1001 to CT3400: Si, PNP, MPS-055...(7448)
	132172	S/N CT3401 and above: Si, PNP, MPS-A55...(7448)
*Q511	132143	Si, NPN, MPS-005
*Q512	132185	Si, NPN, 2N6429A
*Q513	132195	Si, NPN, 40V, Low Noise
*Q514	132196	Si, NPN, NSD-007
*Q515	132195	Si, NPN, 40V, Low Noise
*Q516	132203	Si, NPN, MJ4247
*Q517	132208	Si, NPN, MJ15003
*Q518	132208	Si, NPN, MJ15003
*Q519	132208	Si, NPN, MJ15003
*Q520	132090	Si, NPN, DAR, Selected MPS-A14
*Q521	132204	Si, PNP, MJ4237
*Q522	132209	Si, PNP, MJ15004
*Q523	132209	Si, PNP, MJ15004
*Q524	132209	Si, PNP, MJ15004
*Q525	132195	S/N CT1773 and above: Si, NPN, Selected 2N6428A...(7223)

RESISTORS (CF = Carbon Film, MF = Metal Film, POT = Potentiometer, WW = Wirewound, FP = Flameproof)

RS01	141072	CF, 10kΩ, 5%, 1/4W
RS02	141057	S/N CT1001 to CT1389: CF, 2.2kΩ, 5%, 1/4W...(7098)
	141055	S/N CT1390 and above: CF, 1.8kΩ, 5%, 1/4W ...(7098)
RS03	141096	CF, 100kΩ, 5%, 1/4W
RS04	141124	CF, 2.2MΩ, 5%, 1/4W
*RS05	134389	POT, 100kΩ 10%
RS06	141124	CF, 2.2MΩ, 5%, 1/4W
RS07	141049	CF, 1kΩ, 5%, 1/4W
RS08	141068	S/N CT1001 to CT1389: CF, 6.8kΩ, 5%, 1/4W ...(7098)
	141072	S/N CT1390 and above: CF, 10kΩ, 5%, 1/4W ...(7098)
RS09	141057	CF, 2.2kΩ, 5%, 1/4W
*RS10	144090	MF, 1kΩ, 1%, 1/4W
*RS11	144053	MF, 10kΩ, 1%, 1/4W
*RS12	144053	MF, 10kΩ, 1%, 1/4W
*RS13	144153	MF, 8.25kΩ, 1%, 1/4W
RS14	141049	CF, 1kΩ, 5%, 1/4W
*RS15	144158	S/N CT1001 to CT2701: FP, 15Ω, 5%, 1/4W ...(7385)
	144160	S/N CT2702 and above: FP, 22Ω, 5%, 1/4W ...(7385)
RS16	141064	CF, 4.7kΩ, 5%, 1/4W
RS17	141025	CF, 100Ω, 5%, 1/4W
RS18	141025	CF, 100Ω, 5%, 1/4W
*RS19	144157	S/N CT1001 to CT2701: FP, 10Ω, 5%, 1/4W ...(7385)
	144158	S/N CT2702 and above: FP, 15Ω, 5%, 1/4W ...(7385)
*RS10	144090	MF, 1kΩ, 1%, 1/4W
*RS11	144053	MF, 10kΩ, 1%, 1/4W
*RS12	144053	MF, 10kΩ, 1%, 1/4W
*RS13	144153	MF, 8.25kΩ, 1%, 1/4W
RS14	141049	CF, 1kΩ, 5%, 1/4W
*RS15	144158	S/N CT1001 to CT2701: FP, 15Ω, 5%, 1/4W ...(7385)
	144160	S/N CT2702 and above: FP, 22Ω, 5%, 1/4W ...(7385)
RS16	141064	CF, 4.7kΩ, 5%, 1/4W
RS17	141025	CF, 100Ω, 5%, 1/4W
RS18	141025	CF, 100Ω, 5%, 1/4W
*RS19	144157	S/N CT1001 to CT2701: FP, 10Ω, 5%, 1/4W ...(7385)
	144158	S/N CT2702 and above: FP, 15Ω, 5%, 1/4W ...(7385)
*R410	144090	MF, 1kΩ, 1%, 1/4W
*R411	144053	MF, 10kΩ, 1%, 1/4W
*R412	144053	MF, 10kΩ, 1%, 1/4W
*R413	144153	MF, 8.25kΩ, 1%, 1/4W
R414	141049	CF, 1kΩ, 5%, 1/4W
*R415	144158	S/N CT1001 to CT2701: FP, 15Ω, 5%, 1/4W ...(7385)
	144160	S/N CT2702 and above: FP, 22Ω, 5%, 1/4W
R416	141064	CF, 4.7kΩ, 5%, 1/4W
R417	141025	CF, 100Ω, 5%, 1/4W
R418	141025	CF, 100Ω, 5%, 1/4W
*R419	144157	S/N CT1001 to CT2701: FP, 10Ω, 5%, 1/4W ...(7385)
	144158	S/N CT2702 and above: FP, 15Ω, 5%, 1/4W ...(7385)
R420	141057	CF, 2.2kΩ, 5%, 1/4W
R421	141100	CF, 150kΩ, 5%, 1/4W
R422	141062	CF, 3.9kΩ, 5%, 1/4W
R423	141062	CF, 3.9kΩ, 5%, 1/4W
R424	141057	CF, 2.2kΩ, 5%, 1/4W
R425	141100	CF, 150kΩ, 5%, 1/4W
R426	141064	CF, 4.7kΩ, 5%, 1/4W
R427	141037	CF, 330Ω, 5%, 1/4W
R428	141035	CF, 270Ω, 5%, 1/4W
*R429	134358	POT, Linear, 200Ω, 10%
R430	141196	CF, 47kΩ, 5%, 1/2W
R431	141037	CF, 330Ω, 5%, 1/4W
R432	141150	S/N CT1001 to CT2701: CF, 39Ω, 5%, 1/4W ...(7385)
	141154	S/N CT2702 and above: CF, 56Ω, 5%, 1/4W ...(7385)
R433	141120	CF, 1MΩ, 5%, 1/4W
R434	141086	CF, 39kΩ, 5%, 1/4W
R435	141068	CF, 6.8kΩ, 5%, 1/4W
R436	141102	CF, 180kΩ, 5%, 1/4W
R437	141064	CF, 4.7kΩ, 5%, 1/4W
R438	141025	CF, 100Ω, 5%, 1/4W
*R439	139125	WW, 15Ω, 5%, 5W, Noninductive
R440	141025	CF, 100Ω, 5%, 1/4W
*R441	139125	WW, 15Ω, 5%, 5W, Noninductive
R442	141025	CF, 100Ω, 5%, 1/4W
*R443	139125	WW, 15Ω, 5%, 5W, Noninductive
*R444	144066	FP, 22Ω, 10%, 1/2W
R445	141025	CF, 100Ω, 5%, 1/4W
*R446	139125	WW, 15Ω, 5%, 5W, Noninductive
R447	141025	CF, 100Ω, 5%, 1/4W
*R448	139125	WW, 15Ω, 5%, 5W, Noninductive
R449	141025	CF, 100Ω, 5%, 1/4W
*R450	139125	WW, 15Ω, 5%, 5W, Noninductive
*R451	139077	WW, 1.8Ω, 10%, 2W
*R452	139147	WW, 1Ω, 5%, 2W
R453	141080	S/N CT1773 and above: CF, 22kΩ, 5%, 1/4W ...(7223)
R454	141088	S/N CT1773 and above: CF, 47kΩ, 5%, 1/4W ...(7223)
R455	141049	S/N CT2702 and above: CF, 1kΩ, 5%, 1/4W ...(7385)
R456	141049	S/N CT3264 and above: CF, 1kΩ, 5%, 1/4W ...(7418)
R457	141152	S/N CT3264 and above: CF, 47Ω, 5%, 1/4W ...(7418)

* Parts marked with an asterisk (*) are replacement parts stocked by our Service Department and must be ordered from McIntosh. These parts must be ordered by part number. Parts not marked may be obtained from electronic parts suppliers.

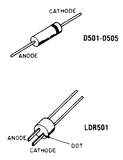

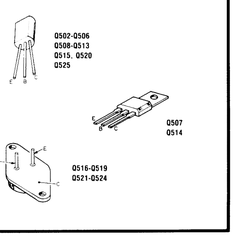

SECTION 5 POWER OUTPUT and POWER GUARD (LEFT CHANNEL)

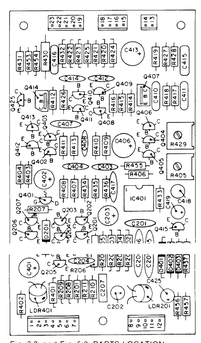

Fig. 3-3. and Fig. 5-3. PARTS LOCATION - PC board 045929 used in units S/N CT3264 and above.

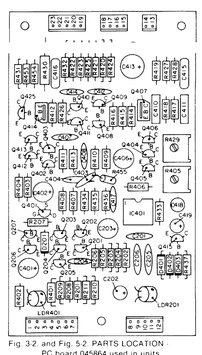

Fig. 3-2. and Fig. 5-2. PARTS LOCATION - PC board 045864 used in units S/N CT2450 to CT3263.

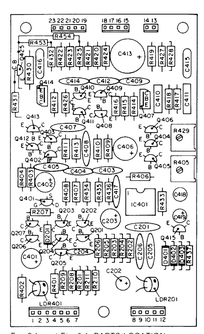

Fig. 3-1. and Fig. 5-1. PARTS LOCATION - PC board 045726 used in units S/N CT1001 to CT2449.

SECTION 3 PREAMP INPUT and HEADPHONE OUTPUT (LEFT CHANNEL)

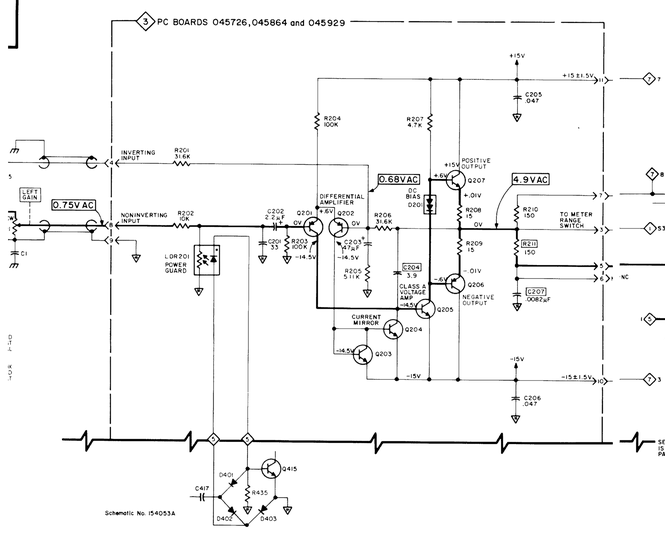

IF THE SYMBOL NUMBER IS ENCLOSED IN A BOX, REFER TO THE PARTS LIST FOR EARLIER VALUES AND SERIAL NUMBER RANGES.

THE VOLTAGES ENCLOSED IN A BOX ARE SIGNAL VOLTAGES MEASURED WITH THE AMPLIFIER OPERATING AT RATED POWER OUTPUT AT 1 kHz.

PARTS LIST

Symbol No.	Part No.	Description
CAPACITORS (CD = Ceramic Disc, ELECT = Electrolytic)		
C201	061016	CD, 33pF, 10%, 500V, NPO
C202	066237	ELECT, 2.2µF, 50V
C203	066313	ELECT, 47µF, 80V, DC
C204	061004	S/N CT1001 to CT2187: CD, 4.7pF, 20%, 500V, NPO...(7211)
	061130	S/N CT2188 to CT2701: CD, 8.2pF, 10%, NPO...(7377)
	*061140	S/N CT2702 and above: CD, 3.9pF, ± .25pF, 100V, NPO ...(7377)
C205	061161	CD, .047µF, +80 – 20%, 50V
C206	061161	CD, .047µF, +80 – 20%, 50V
C207	064172	S/N CT3264 and above: PF, .0082µF, 5%, 100V ...(7418)
DIODES (Si = Silicon, STAB = Stabistor)		
*D201	070046	Si, STAB, 1.3V, 2%, 10mA, Selected MZ236
LIGHT DEPENDENT RESISTORS		
*LDR201	144070	LDR, CLM6000
TRANSISTORS (Si = Silicon)		
*Q201	132056	Si, PNP, 2N5087
*Q202	132056	Si, PNP, 2N5087
*Q203	132195	Si, NPN, 40V, Low Noise
*Q204	132195	Si, NPN, 40V, Low Noise
*Q205	132195	Si, NPN, 40V, Low Noise
*Q206	132172	Si, PNP, MPS-A55
*Q207	132171	Si, NPN, MPS-A05
RESISTORS (CF = Carbon Film, MF = Metal Film)		
*R201	144148	MF, 31.6kΩ, 1%, 1/4W
R202	141072	CF, 10kΩ, 5%, 1/4W
R203	141096	CF, 100kΩ, 5%, 1/4W
R204	141096	CF, 100kΩ, 5%, 1/4W
*R205	144083	MF, 5.11kΩ, 2%, 1/4W
*R206	144148	MF, 31.6kΩ, 1%, 1/4W
R207	141064	CF, 4.7kΩ, 5%, 1/4W
R208	141140	CF, 15Ω, 5%, 1/4W
R209	141140	CF, 15Ω, 5%, 1/4W
R210	141029	CF, 15Ω, 5%, 1/4W
R211	141150	S/N CT1001 to CT2701: CF, 39Ω, 5%, 1/4W ...(7377)
	141029	S/N CT2702 and above: CF, 15Ω, 5%, 1/4W ...(7377)

* Parts marked with an asterisk (*) are replacement parts stocked by our Service Department and must be ordered from McIntosh. These parts must be ordered by part number. Parts not marked may be obtained from electronic parts suppliers.

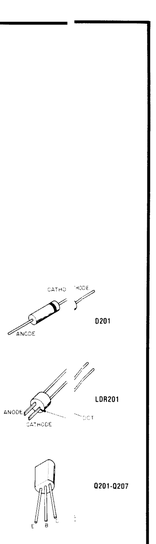

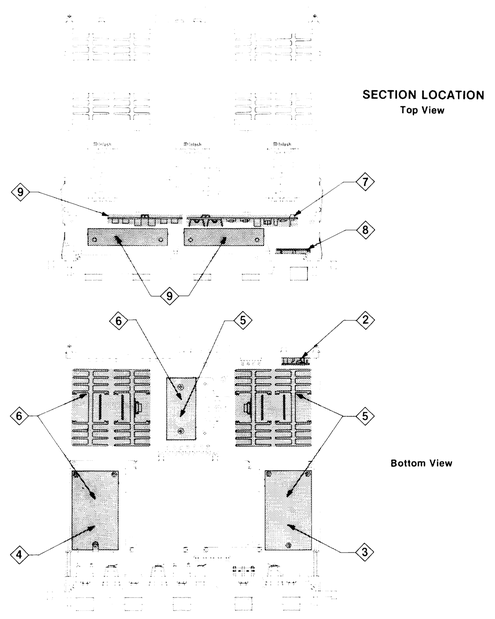

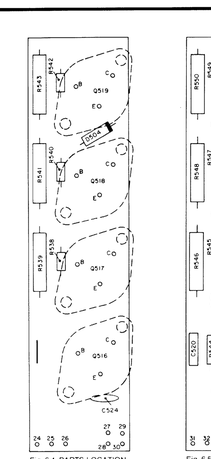

Fig. 6-4. PARTS LOCATION - PC board 045728, positive heatsink.

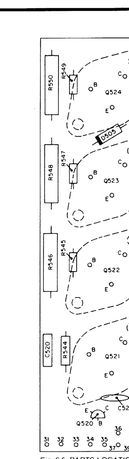

Fig. 6-5. PARTS LOCATION - PC board 045729, negative heatsink.

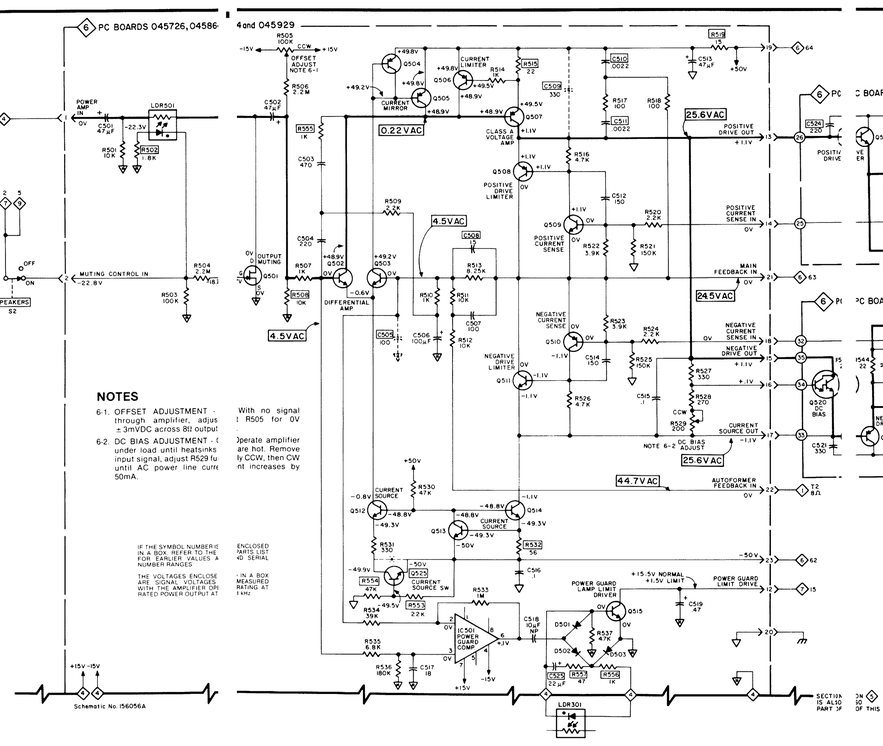

NOTES

6-1. OFFSET ADJUSTMENT - With no signal through amplifier, adjust R505 for 0V ± 3mVDC across 8Ω output.

6-2. DC BIAS ADJUSTMENT - Operate amplifier under load until heatsinks are hot. Remove input signal, adjust R529 fully CCW, then CW until AC power line current increases by 50mA.

IF THE SYMBOL NUMBER IS ENCLOSED IN A BOX, REFER TO THE PARTS LIST FOR EARLIER VALUES AND SERIAL NUMBER RANGES.

THE VOLTAGES ENCLOSED IN A BOX ARE SIGNAL VOLTAGES MEASURED WITH THE AMPLIFIER OPERATING AT RATED POWER OUTPUT AT 1 kHz.

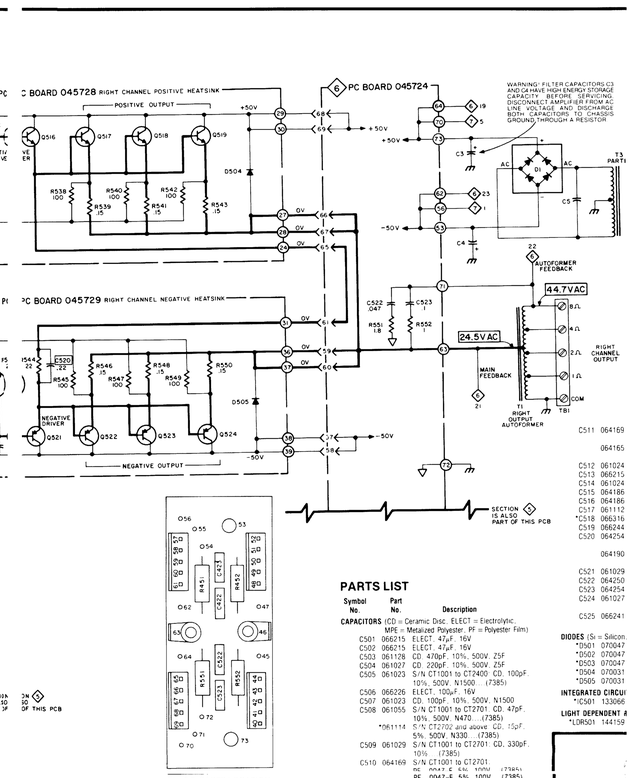

Fig. 6-6. PARTS LOCATION - PC board 045724.

PARTS LIST

Symbol No.	Part No.	Description
CAPACITORS (CD = Ceramic Disc, ELECT = Electrolytic, MPE = Metalized Polyester, PF = Polyester Film)		
C501	066215	ELECT, 47µF, 16V
C502	066215	ELECT, 47µF, 16V
C503	061126	CD, 470pF, 10%, 500V, Z5F
C504	061027	CD, 220pF, 10%, 500V, Z5F
C505	061023	S/N CT1001 to CT2400: CD, 100pF, 10%, 500V, N1500 ...(7385)
C506	066226	ELECT, 100µF, 16V
C507	061023	CD, 100pF, 10%, 500V, N1500
C508	061055	S/N CT1001 to CT2701: CD, 47pF, 10%, 500V, N470...(7385)
	*061114	S/N CT2702 and above: CD, 15pF, 5%, 500V, N330...(7385)
C509	061029	S/N CT1001 to CT2701: CD, 330pF, 10%...(7385)
C510	064169	S/N CT1001 to CT2701: PF, .0047µF, 5%, 100V ...(7385)
	064165	S/N CT2702 and above: PF, .0047µF, 5%, 100V...(7385)
		S/N CT2702 and above: PF, .0022µF, 5%, 100V ...(7385)
		S/N CT1001 to CT2701: CD, 330pF, 10%...(7385)
		S/N CT2702 and above: CD, 15pF, 5%, 500V, N330...(7385)
		S/N CT1001 to CT2701: CD, 47pF, 10%, 500V, N470...(7385)
		S/N CT1001 to CT2701: PF, .0047µF, 5%, 100V ...(7385)
		S/N CT2702 and above: PF, .0022µF, 5%, 100V ...(7385)
		S/N CT1001 to CT2701: CD, 150pF, 10%, 500V, Z5F
		ELECT, 47µF, 16V
		CD, 150pF, 10%, 500V, Z5F
		MPE, .1µF, 5%, 63V
		MPE, .1µF, 5%, 63V
		CD, 18pF, 10%, 500V, NPO
		ELECT, 10µF, 25V, NP
		ELECT, 47µF, 50V
		CD, 330pF, 10%
		MPE, .047µF, 10%, 63V
		MPE, .1µF, 10%, 63V
		S/N CT1087 and above: CD, 220pF, 10%, 500V, Z5F ...(7167)
		S/N CT3264 and above: ELECT, 22µF, 6V ...(7418)
		SIG = Signal, RECT = Rectifier)
		Si, SIG, 75V, 10mA, IN4148
		Si, SIG, 75V, 10mA, IN4148
		Si, SIG, 75V, 10mA, IN4148
		Si, RECT, 400 PIV, 1.5A
		Si, RECT, 400 PIV, 1.5A
DIODES (Si = Silicon, STAB = Stabistor)		
		AN, BP, Operation Amp, NE-5534AN
TRANSISTORS		
		LDR, CLM6500

TRANSISTORS (DAR = Darlington, J-FET = Junction FET, Si = Silicon, N = N Channel)

*Q501	132193	Si, N, J-FET, 2N4392
*Q502	132185	Si, NPN, 2N6429A
*Q503	132185	Si, NPN, 2N6429A
*Q504	132150	S/N CT1001 to CT3000: Si, PNP, MPS-055...(7440)
	132056	S/N CT3001 and above: Si, PNP, 2N5087 ...(7440)
*Q505	132150	S/N CT1001 to CT3400: Si, PNP, MPS-055...(7448)
	132172	S/N CT3401 and above: Si, PNP, MPS-A55...(7448)
*Q506	132150	S/N CT1001 to CT3000: Si, PNP, MPS-055...(7440)
	132056	S/N CT3001 and above: Si, PNP, 2N5087 ...(7440)
*Q507	132194	Si, PNP, NDS-057
*Q508	132150	S/N CT1001 to CT3400: Si, PNP, MPS-055...(7448)
	132172	S/N CT3401 and above: Si, PNP, MPS-A55...(7448)
*Q509	132143	Si, NPN, MPS-005
*Q510	132150	S/N CT1001 to CT3400: Si, PNP, MPS-055...(7448)
	132172	S/N CT3401 and above: Si, PNP, MPS-A55...(7448)
*Q511	132143	Si, NPN, MPS-005
*Q512	132185	Si, NPN, 2N6429A
*Q513	132195	Si, NPN, 40V, Low Noise
*Q514	132196	Si, NPN, NSD-007
*Q515	132195	Si, NPN, 40V, Low Noise
*Q516	132203	Si, NPN, MJ4247
*Q517	132208	Si, NPN, MJ15003
*Q518	132208	Si, NPN, MJ15003
*Q519	132208	Si, NPN, MJ15003
*Q520	132090	Si, NPN, DAR, Selected MPS-A14
*Q521	132204	Si, PNP, MJ4237
*Q522	132209	Si, PNP, MJ15004
*Q523	132209	Si, PNP, MJ15004
*Q524	132209	Si, PNP, MJ15004
*Q525	132195	S/N CT1773 and above: Si, NPN, Selected 2N6428A...(7223)

RESISTORS (CF = Carbon Film, MF = Metal Film, POT = Potentiometer, WW = Wirewound, FP = Flameproof)

R401	141072	CF, 10kΩ, 5%, 1/4W
R402	141057	S/N CT1001 to CT1389: CF, 2.2kΩ, 5%, 1/4W...(7098)
	141055	S/N CT1390 and above: CF, 1.8kΩ, 5%, 1/4W ...(7098)
R403	141096	CF, 100kΩ, 5%, 1/4W
R404	141124	CF, 2.2M, 5%, 1/4W
*R405	134389	POT, 100kΩ 10%
R406	141124	CF, 2.2M, 5%, 1/4W
R407	141049	CF, 1kΩ, 5%, 1/4W
R408	141068	S/N CT1001 to CT1389: CF, 6.8kΩ, 5%, 1/4W ...(7098)
	141072	S/N CT1390 and above: CF, 10kΩ, 5%, 1/4W ...(7098)
R409	141057	CF, 2.2kΩ, 5%, 1/4W
*R412	144053	MF, 10kΩ, 1%, 1/4W
*R413	144153	MF, 8.25kΩ, 1%, 1/4W
R414	141049	CF, 1kΩ, 5%, 1/4W
*R415	144158	S/N CT1001 to CT2701: FP, 15Ω, 5%, 1/4W ...(7385)
	144160	S/N CT2702 and above: FP, 22Ω, 5%, 1/4W
R416	141064	CF, 4.7kΩ, 5%, 1/4W
R417	141025	CF, 100Ω, 5%, 1/4W
R418	141025	CF, 100Ω, 5%, 1/4W
*R419	144157	S/N CT1001 to CT2701: FP, 10Ω, 5%, 1/4W ...(7385)
	144158	S/N CT2702 and above: FP, 15Ω, 5%, 1/4W ...(7385)
R420	141057	CF, 2.2kΩ, 5%, 1/4W
R421	141100	CF, 150kΩ, 5%, 1/4W
R422	141062	CF, 3.9kΩ, 5%, 1/4W
R423	141062	CF, 3.9kΩ, 5%, 1/4W
R424	141057	CF, 2.2kΩ, 5%, 1/4W
R425	141100	CF, 150kΩ, 5%, 1/4W
R426	141064	CF, 4.7kΩ, 5%, 1/4W
R427	141037	CF, 330Ω, 5%, 1/4W
R428	141035	CF, 270Ω, 5%, 1/4W
*R429	134358	POT, Linear, 200Ω, 10%
R430	141196	CF, 47kΩ, 5%, 1/2W
R431	141037	CF, 330Ω, 5%, 1/4W
R432	141150	S/N CT1001 to CT2701: CF, 39Ω, 5%, 1/4W ...(7385)
	141154	S/N CT2702 and above: CF, 56Ω, 5%, 1/4W ...(7385)
R433	141120	CF, 1MΩ, 5%, 1/4W
R434	141086	CF, 39kΩ, 5%, 1/4W
R435	141068	CF, 6.8kΩ, 5%, 1/4W
R436	141102	CF, 180kΩ, 5%, 1/4W
R437	141064	CF, 4.7kΩ, 5%, 1/4W
R438	141025	CF, 100Ω, 5%, 1/4W
*R439	139125	WW, 15Ω, 5%, 5W, Noninductive
R440	141025	CF, 100Ω, 5%, 1/4W
*R441	139125	WW, 15Ω, 5%, 5W, Noninductive
R442	141025	CF, 100Ω, 5%, 1/4W
*R443	139125	WW, 15Ω, 5%, 5W, Noninductive
*R444	144066	FP, 22Ω, 10%, 1/2W
R445	141025	CF, 100Ω, 5%, 1/4W
*R446	139125	WW, 15Ω, 5%, 5W, Noninductive
R447	141025	CF, 100Ω, 5%, 1/4W
*R448	139125	WW, 15Ω, 5%, 5W, Noninductive
R449	141025	CF, 100Ω, 5%, 1/4W
*R450	139125	WW, 15Ω, 5%, 5W, Noninductive
*R451	139077	WW, 1.8Ω, 10%, 2W
*R452	139147	WW, 1Ω, 5%, 2W
R453	141080	S/N CT1773 and above: CF, 22kΩ, 5%, 1/4W ...(7223)
R454	141088	S/N CT1773 and above: CF, 47kΩ, 5%, 1/4W ...(7223)
R455	141049	S/N CT2702 and above: CF, 1kΩ, 5%, 1/4W...(7385)
R456	141049	S/N CT3264 and above: CF, 1kΩ, 5%, 1/4W ...(7418)
R457	141152	S/N CT3264 and above: CF, 47Ω, 5%, 1/4W ...(7418)

* Parts marked with an asterisk (*) are replacement parts stocked by our Service Department and must be ordered from McIntosh. These parts must be ordered by part number. Parts not marked may be obtained from electronic parts suppliers.

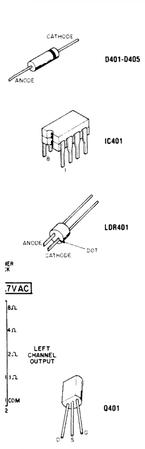

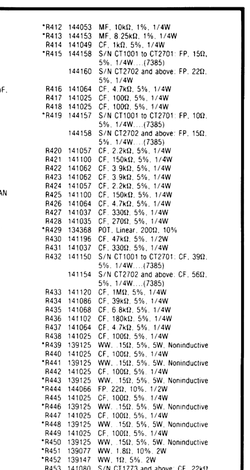

SECTION 6 POWER OUTPUT and POWER GUARD (RIGHT CHANNEL)

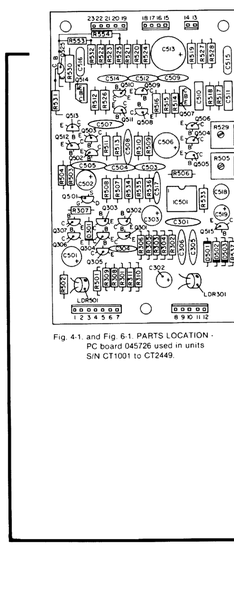

Fig. 6-4. PARTS LOCATION - PC board 045728, positive heatsink.

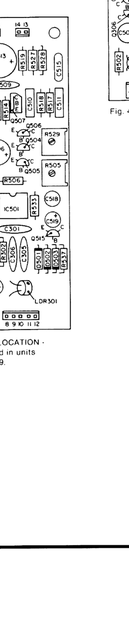

Fig. 6-5. PARTS LOCATION - PC board 045729, negative heatsink.

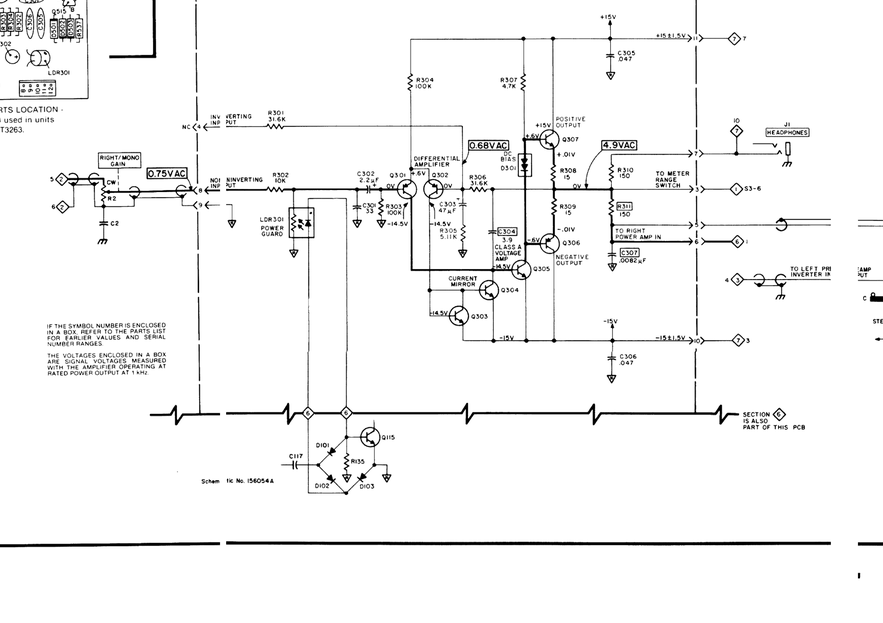

NOTES

6-1. OFFSET ADJUSTMENT - With no signal through amplifier, adjust R505 for 0V ± 3mVDC across 8Ω output.

6-2. DC BIAS ADJUSTMENT - Operate amplifier under load until heatsinks are hot. Remove input signal, adjust R529 fully CCW, then CW until AC power line current increases by 50mA.

IF THE SYMBOL NUMBER IS ENCLOSED IN A BOX, REFER TO THE PARTS LIST FOR EARLIER VALUES AND SERIAL NUMBER RANGES.

THE VOLTAGES ENCLOSED IN A BOX ARE SIGNAL VOLTAGES MEASURED WITH THE AMPLIFIER OPERATING AT RATED POWER OUTPUT AT 1 kHz.

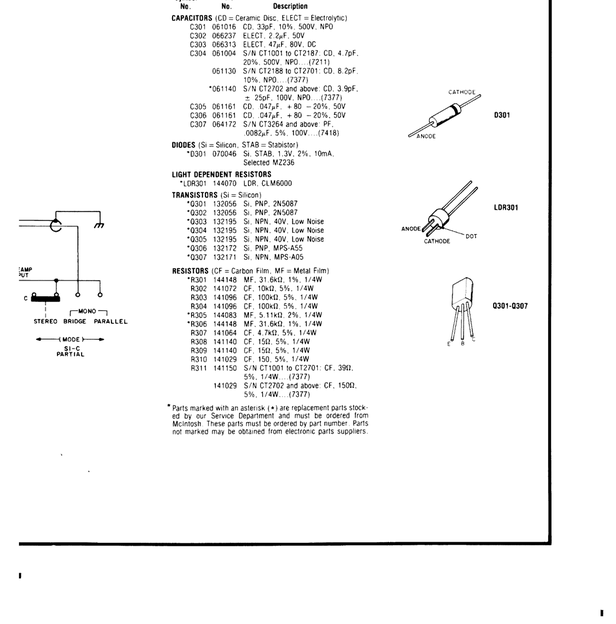

Fig. 6-6. PARTS LOCATION - PC board 045724.

PARTS LIST

Symbol No.	Part No.	Description
CAPACITORS (CD = Ceramic Disc, ELECT = Electrolytic, MPE = Metalized Polyester, PF = Polyester Film)		
C501	066215	ELECT, 47µF, 16V
C502	066215	ELECT, 47µF, 16V
C503	061126	CD, 470pF, 10%, 500V, Z5F
C504	061027	CD, 220pF, 10%, 500V, Z5F
C505	061023	S/N CT1001 to CT2400: CD, 100pF, 10%, 500V, N1500 ...(7385)
C506	066226	ELECT, 100µF, 16V
C507	061023	CD, 100pF, 10%, 500V, N1500
C508	061055	S/N CT1001 to CT2701: CD, 47pF, 10%, 500V, N470...(7385)
	*061114	S/N CT2702 and above: CD, 15pF, 5%, 500V, N330...(7385)
C509	061029	S/N CT1001 to CT2701: CD, 330pF, 10%...(7385)
C510	064169	S/N CT1001 to CT2701: PF, .0047µF, 5%, 100V ...(7385)
	064165	S/N CT2702 and above: PF, .0047µF, 5%, 100V...(7385)
		S/N CT2702 and above: