MQ 107
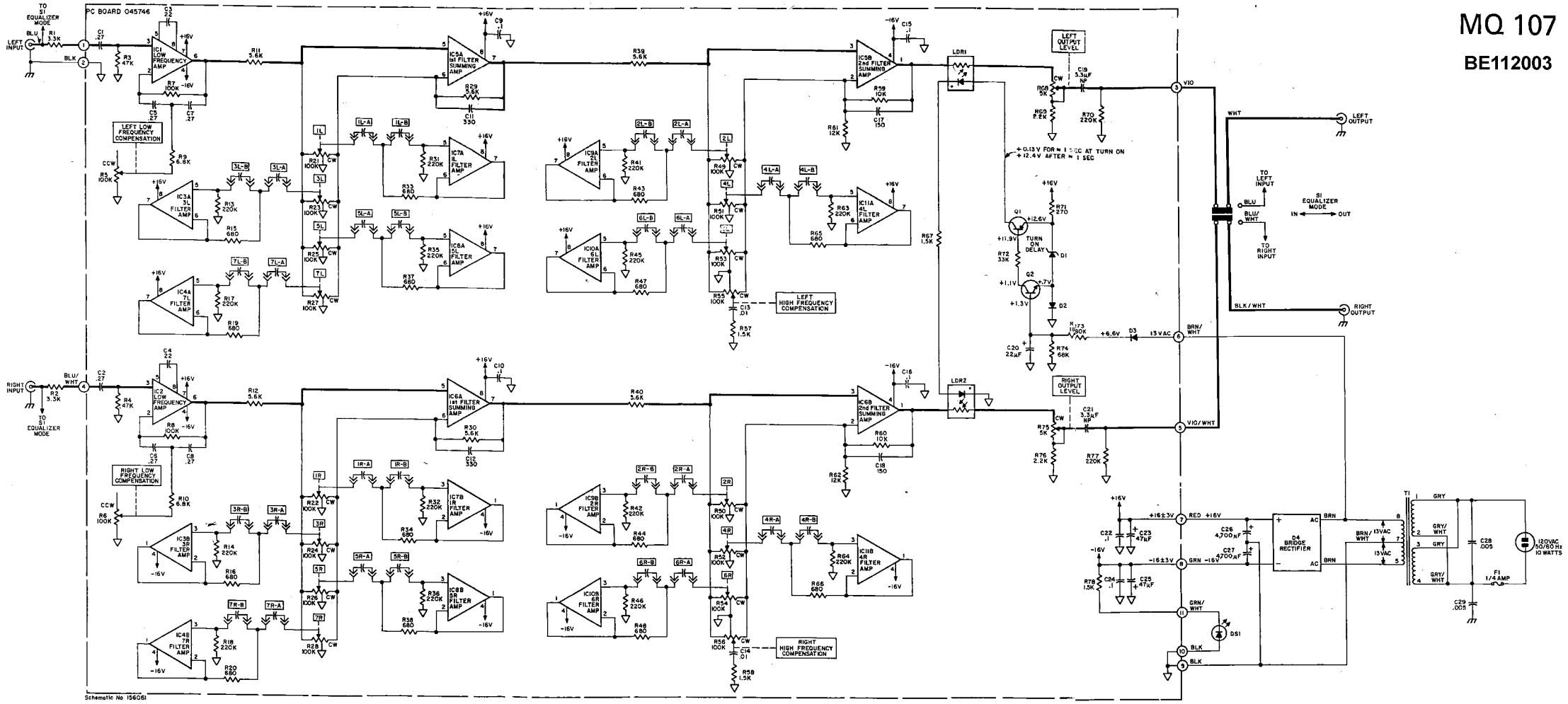
BE112003