MITSUBISHI
AUDIO SYSTEMS

SERVICE MANUAL

# AM/FM STEREO TUNER

## MODEL DA-F603

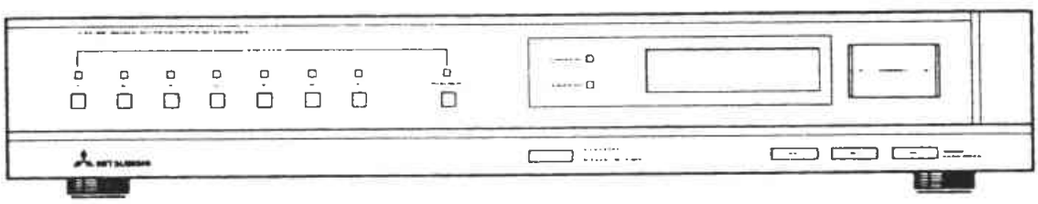

CONTENTS


SPECIFICATIONS . . . . . 2
FRONT PANEL TERMINOLOGY AND FUNCTIONS . . . . . 2
DISASSEMBLY PROCEDURES . . . . . 3
ADJUSTMENTS . . . . . 4
INTERNAL DIAGRAMS AND PINOUT OF INTEGRATED CIRCUIT . . . . . 8
BROCK DIAGRAM . . . . . 10
WIRING DIAGRAM . . . . . 11
SCHEMATIC DIAGRAM . . . . . 13
PRINTED CIRCUIT BOARDS . . . . . 15
EXPLODED VIEW OF CABINET . . . . . 17
PARTS LIST . . . . . 18



MITSUBISHI ELECTRIC CORPORATION

## ADJUSTMENTS

| No. | Measured Item | Input/Output and procedure | Point of Adjustment | Adjustment for |
|---|---|---|---|---|
| 1 | AM IF Adjustment [MW mode] | • Set the IF sweep frequency to 455kHz.<br>• Connect IF sweep's OUT terminal to loop antenna. Connect IF sweep's IN terminal to TP1. (Fig. 6) | T5<br>T8 | Adjust T5 and T8 so that the waveform is maximum and symmetrical as in Fig. 4. |
| 2 | FM IF Adjustment [FM mode] (Coarse) | • Set the IF sweep frequency to 10.7MHz.<br>• Connect IF sweep's OUT terminal to the FM antenna terminal through the 300Ω balanced dummy. (signal level 1 mV) IF sweep's IN terminal to TP2 and IF sweep's ground terminal to TP7 (GND). (Fig. 7) | T6<br>T7 | Adjust T6 and T7 so that the sweep waveform is maximum and symmetrical as in Fig. 5. |
| 3 | FM VCO Check | • Connect digital voltmeter across TP5 and TP7 (GND). (Fig. 8)<br>• Set the function to the FM position, the reception frequency to 98MHz and check that voltage is 1.6 ± 0.05V.<br>• Set frequency to 108MHz and check that the voltage is 8 ± 0.05V. | | |
| 4 | FM IF Adjustment [FM mode] (Fine) | • Set the FM signal generator to 98MHz and connect to the FM antenna terminal through the 300Ω balanced dummy. (signal level 1 mV)<br>• Set the function to the FM position and the reception frequency to 98MHz.<br>• Connect a distortion meter to the audio output of the onetouch connector. (Fig. 9) | T6<br>T7 | Adjust for minimum distortion. |
| 5 | MW VCO Adjustment | • Connect digital voltmeter across TP6 and TP7 (GND). (Fig. 8)<br>• Set the function to the MW position, and the reception frequency to 522kHz (min. frequency). | T3 | Adjust T3 until voltage becomes 0.9 ± 0.05V. |
| | | • Set the reception frequency to 1.611kHz (max. frequency). | TC3 | Adjust TC3 until voltage becomes 9.14 ± 0.05V. |
| | | • Repeat the above adjustments two or three times until both adjustments are at best level. | | |
| 6 | MW Tracking Adjustment | • Radiate each of the tracking point frequencies given below from the AM test loop (signal level 56dB/m)<br>• Receive each of the tracking point frequencies given below by means of the key or Tuning Up/Down Switch.<br>• Connect the AC voltmeter to the audio output of onetouch connector. (Fig. 10) | T1<br>TC1 | Adjust so that the output is maximum at each tracking point. |

| No. | Measured Item | Input/Output and procedure | Point of Adjustment | Adjustment for |
|---|---|---|---|---|
| 6 | MW Tracking Adjustment | • Tracking point frequency<br>1,395 kHz<br>999 kHz<br>603 kHz | | |
| | | • Repeat adjustment at each tracking points alternately. | | |
| 7 | LW VCO Adjustment | • Connect digital voltmeter across TP6 and TP7 (GND). (Fig. 8)<br>• Set the function to the LW position and the reception frequency to 155kHz (min. frequency). | T4 | Adjust T4 until voltage becomes 1.4 ± 0.05V |
| | | • Set the reception frequency to 353kHz (max. frequency). | TC4 | Adjust TC4 until voltage becomes 6.0 ± 0.05V |
| | | • Repeat the above adjustments two or three times until both adjustments are at best level. | | |
| 8 | LW Tracking Adjustment | • Radiate each of the tracking point frequencies given below from the AM test loop (signal level 56dB/m)<br>• Receive each of the tracking point frequencies given below by means of the key or Tuning Up/Down Switch.<br>• Connect the AC voltmeter to the audio output of the onetouch connector. (Fig. 10)<br>• Tracking point frequency<br>344 kHz<br>254 kHz<br>164 kHz | T2<br>TC2 | Adjust so that the output is maximum at each tracking point. |
| | | • Repeat adjustment at each tracking points alternately. | | |
| 9 | FM MPX Free Run Frequency Adjustment | • Set the FM signal generator (unmodulated) to 98MHz and connect it to the FM antenna terminal through the 300Ω balanced dummy. (signal level 1 mV)<br>• Set the function to the FM position and 98MHz reception.<br>• Connect the frequency counter to TP3 and GND. (Fig. 11) | | Adjust for a frequency of 19kHz ± 100Hz. |
| 10 | Separation Adjustment | • Connect the stereo signal modulator to the FM signal generator. Connect the 98MHz 1 mV signal to the FM antenna terminal through the 300Ω balanced dummy.<br>• Set the function to the FM position and 98MHz reception.<br>• Connect the AC voltmeter and oscilloscope to the audio output of the onetouch connector. (Fig. 9) | VR1 | Adjust for maximum L ch and R ch separation. |

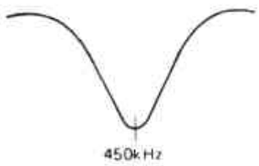


Fig. 4

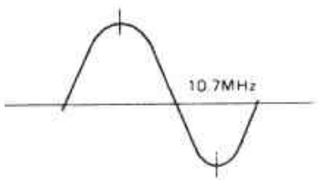


Fig. 5

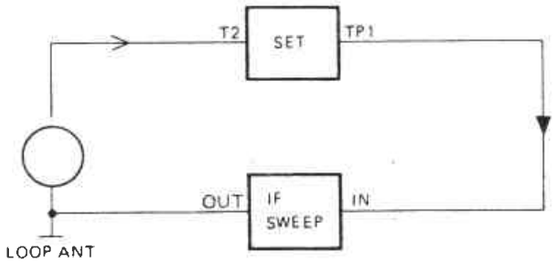


Fig. 6

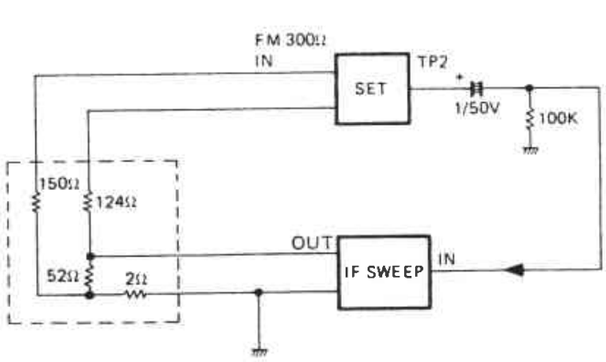


Fig. 7

Fig. 8

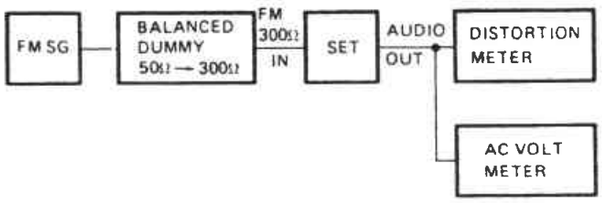


Fig. 9

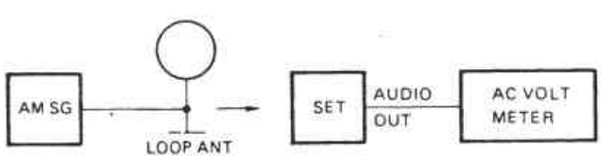


Fig. 10

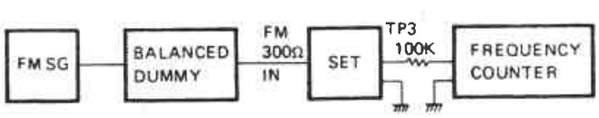


Fig. 11

## ADJUSTMENT POINT

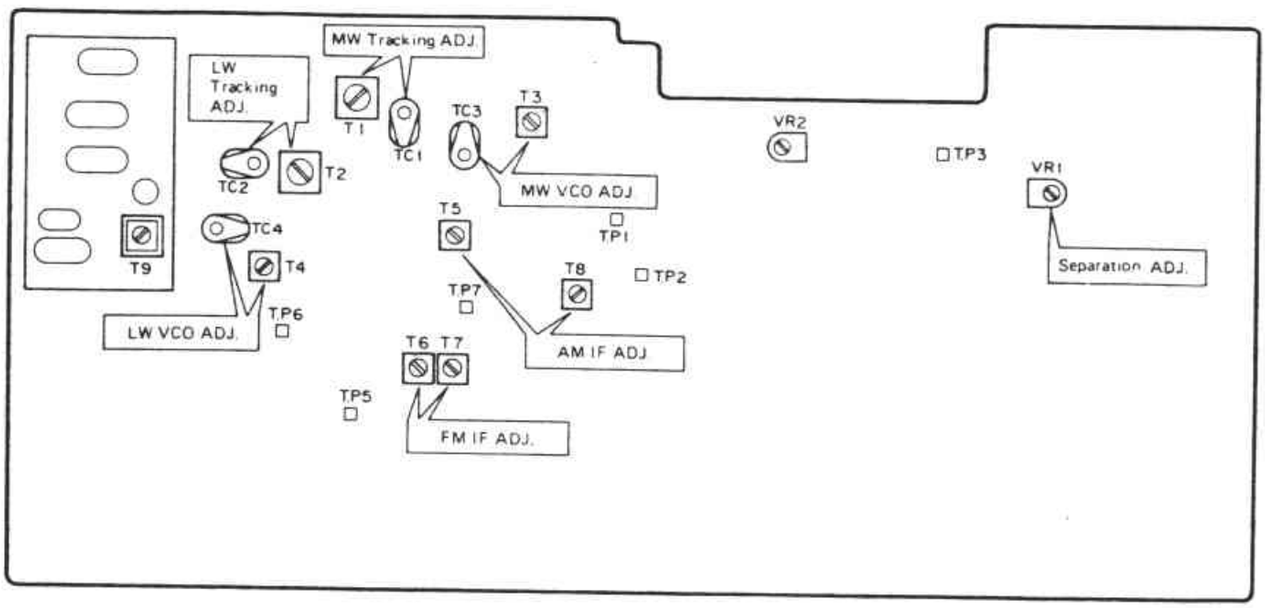

## INTERNAL DIAGRAMS AND PINOUT OF INTEGRATED CIRCUIT

### IC1:LA1207

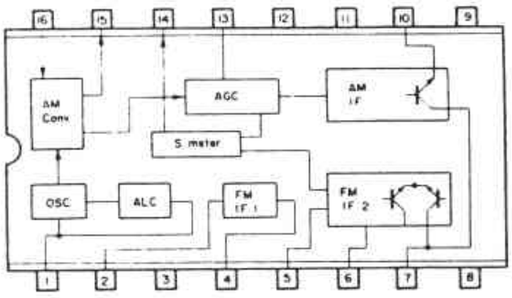


### IC2:LA3361

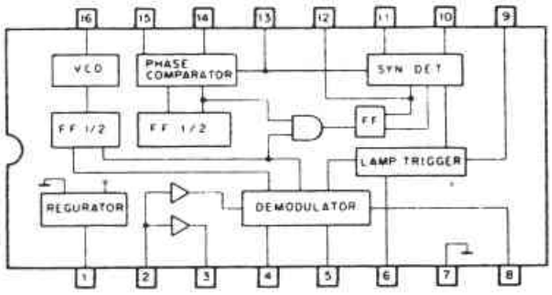


### IC3:μPB553AC

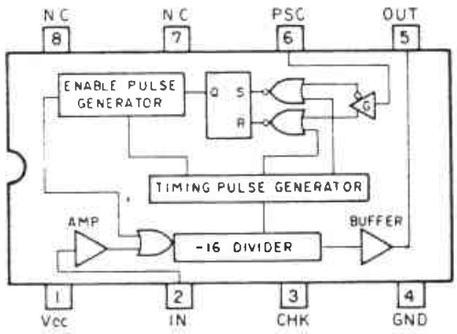


### IC6:μPD1703C-18

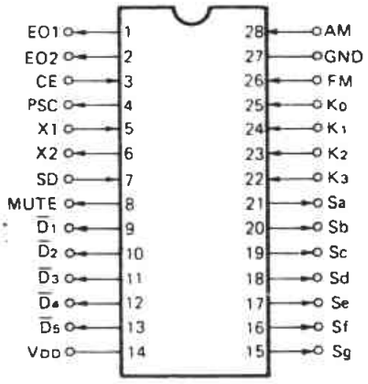


### IC4,IC5:TC411BP

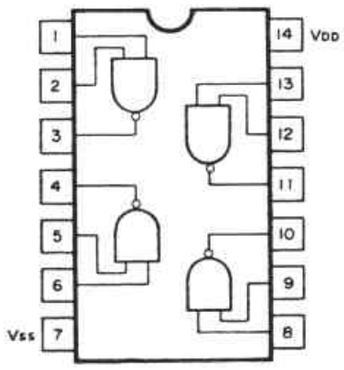


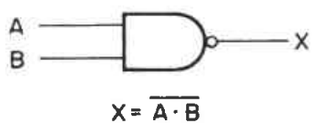


TRUTH TABLE

| A | B | X |
|---|---|---|
| L | L | H |
| L | H | H |
| H | L | H |
| H | H | L |

**IC7:TC4035BP**

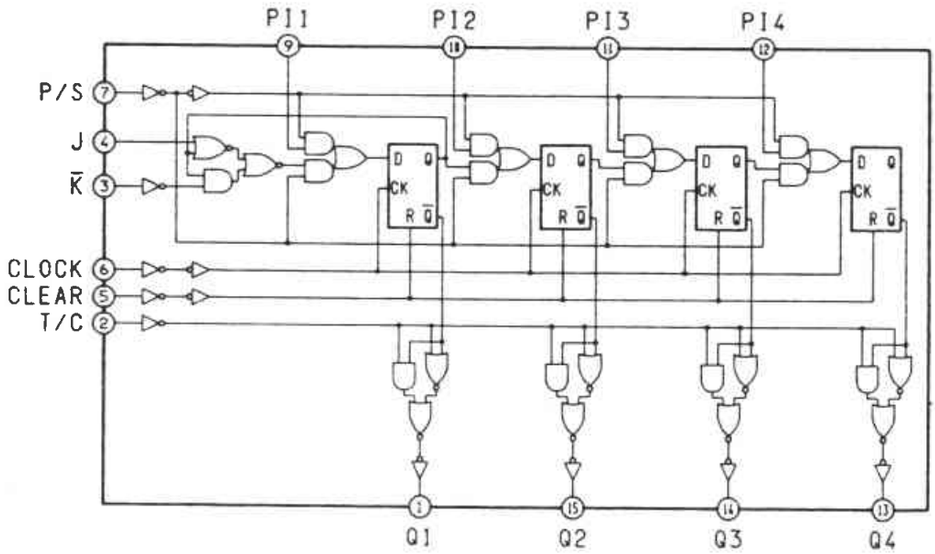


**IC8:M74LS42P**

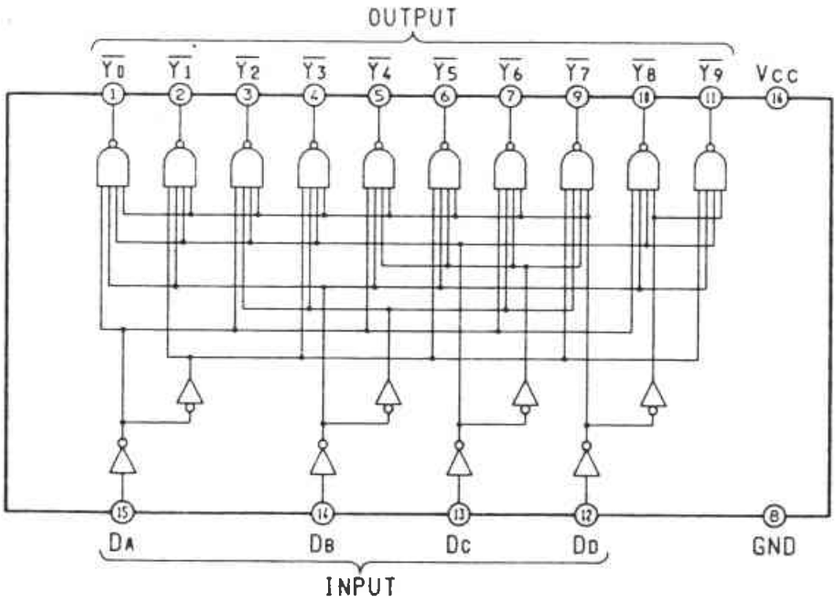

**IC9:TA-57**

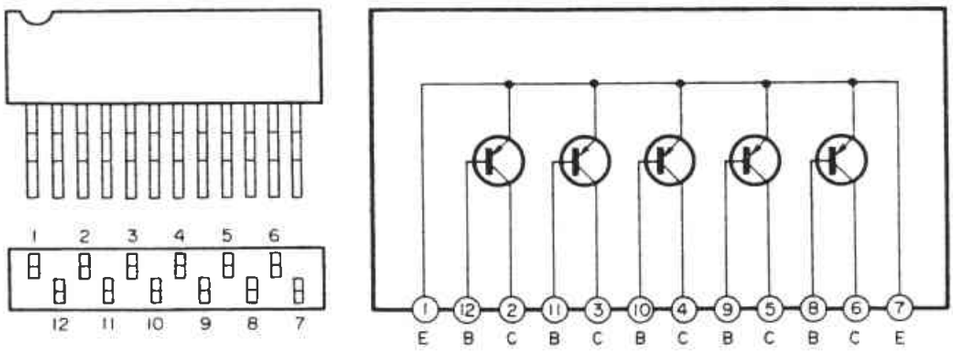


**BLOCK DIAGRAM**

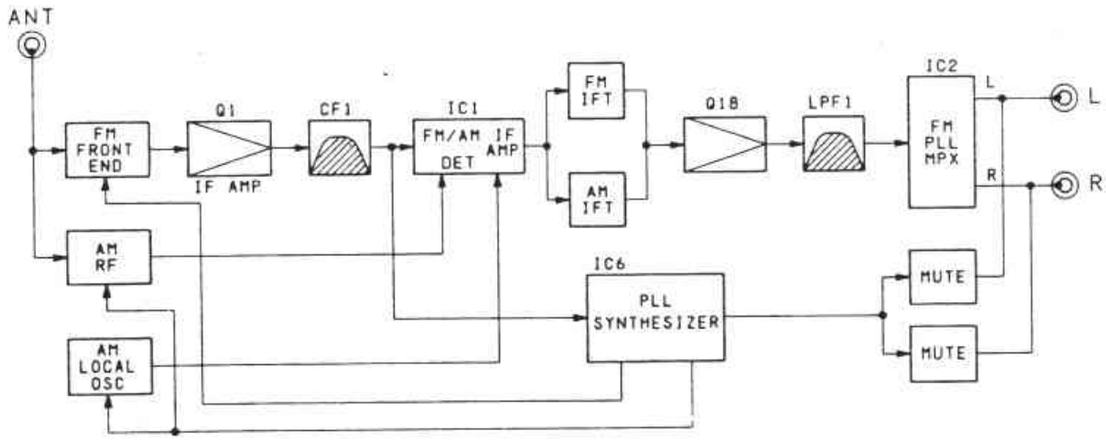

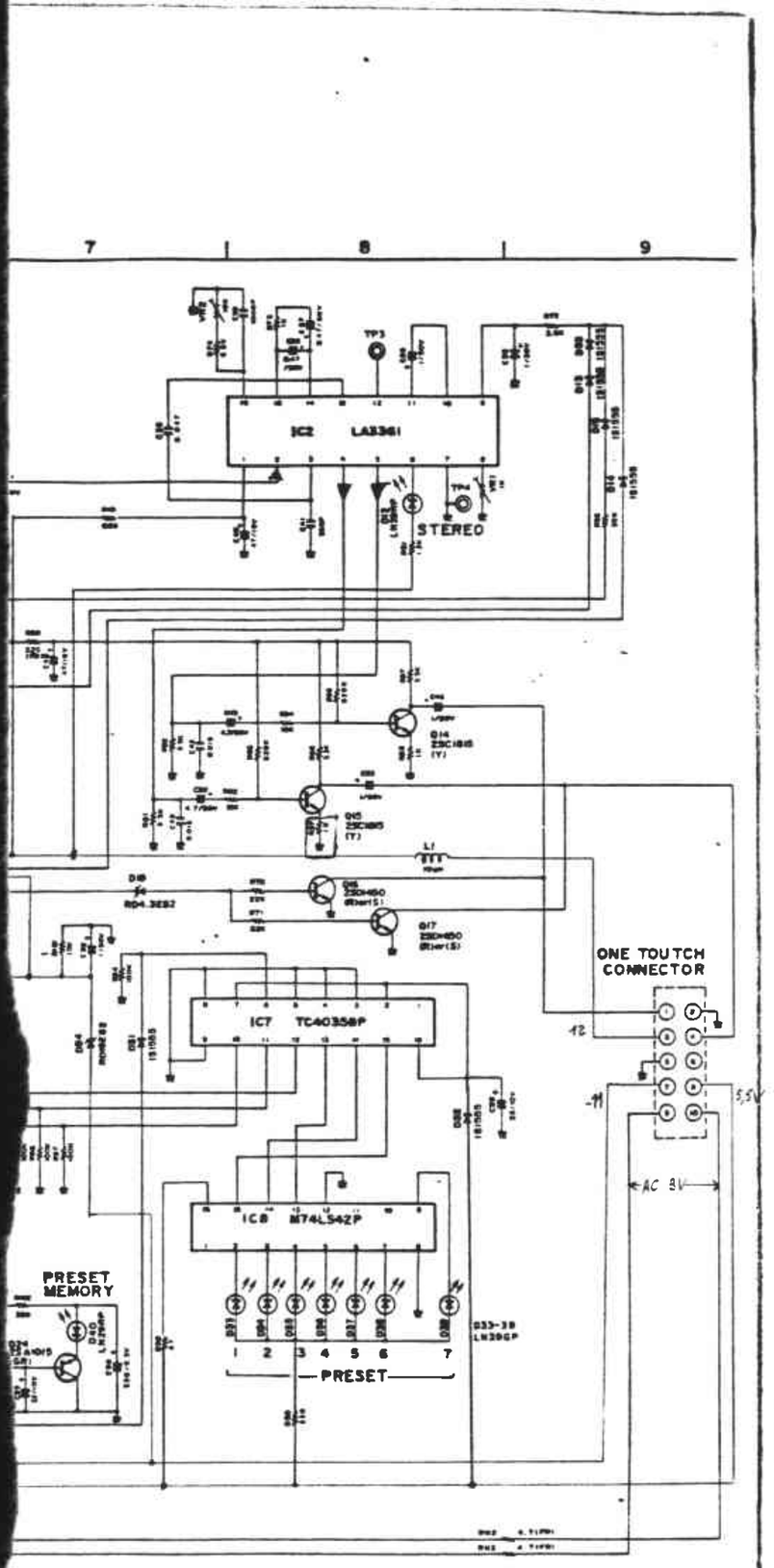


FM Signal

AM Signal

DA-F603 DA-F603

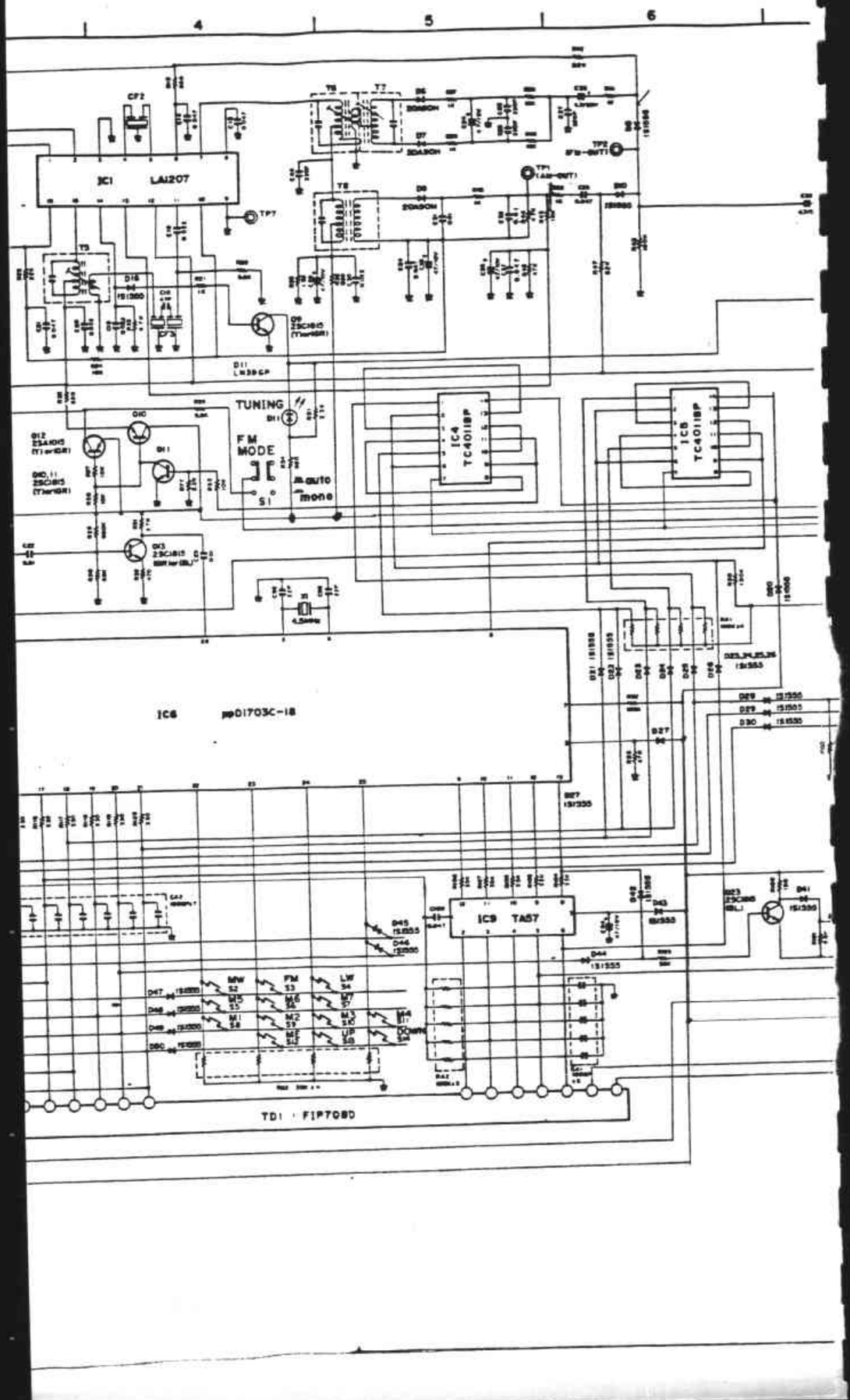

## :HEMATIC DIAGRAM

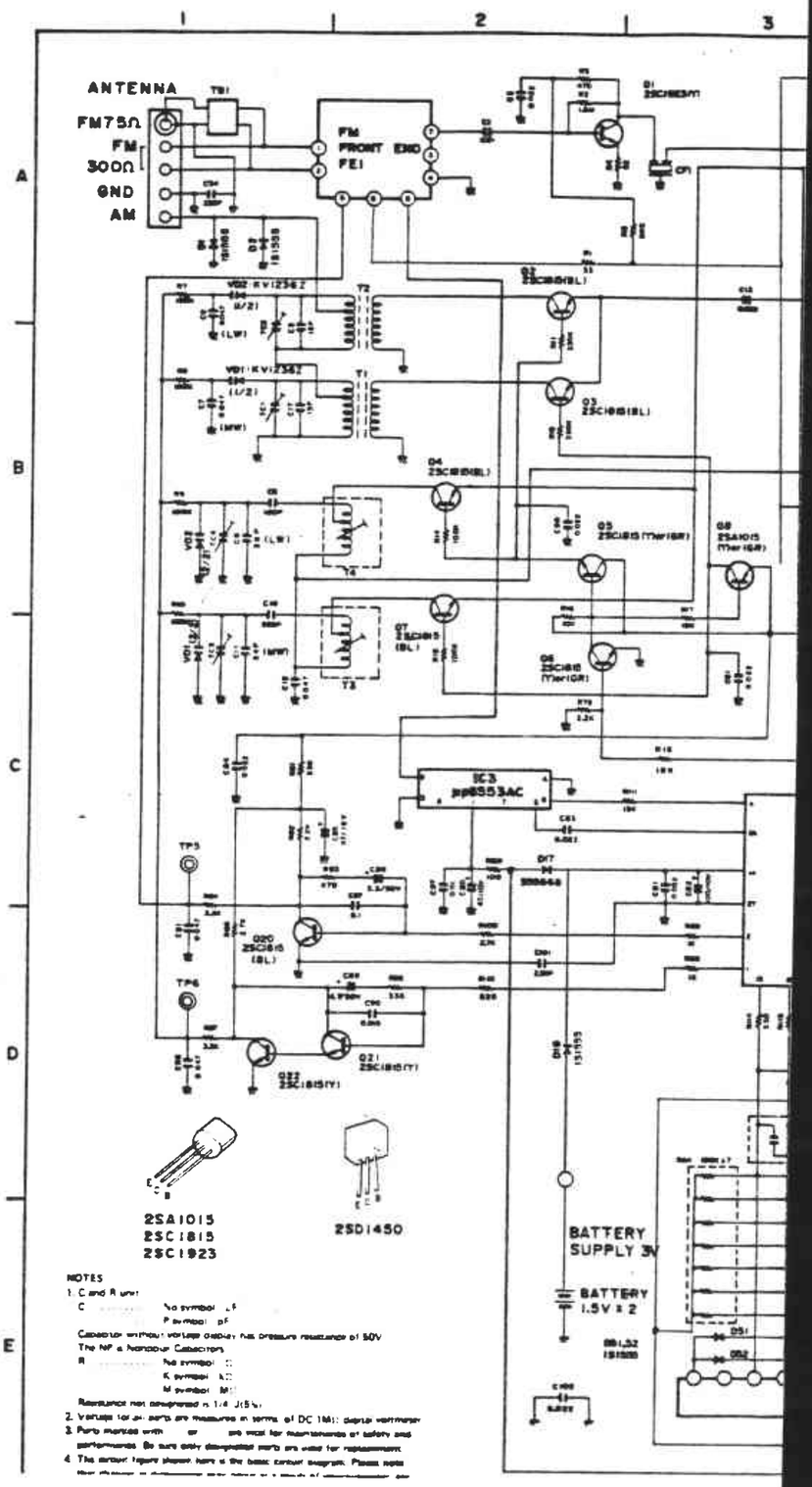


NOTES

1. C and R unit
   C ..... No symbol ..F
   P symbol pF
   Capacitor without voltage display has pressure resistance of 50V
   The NP is Nonpolar Capacitors
   R ..... No symbol ..
   K symbol ..
   M symbol ..
   Resistance not designated is 1/4 J(5%)
2. Voltage for all parts are measured in terms of DC 1M(1) digital voltmeter
3. Parts marked with ... are vital for maintenance of safety and performance. Be sure only designated parts are used for replacement.
4. The circuit figure shown here is the basic circuit diagram. Please note [illegible]

WIRING DIAGRAM

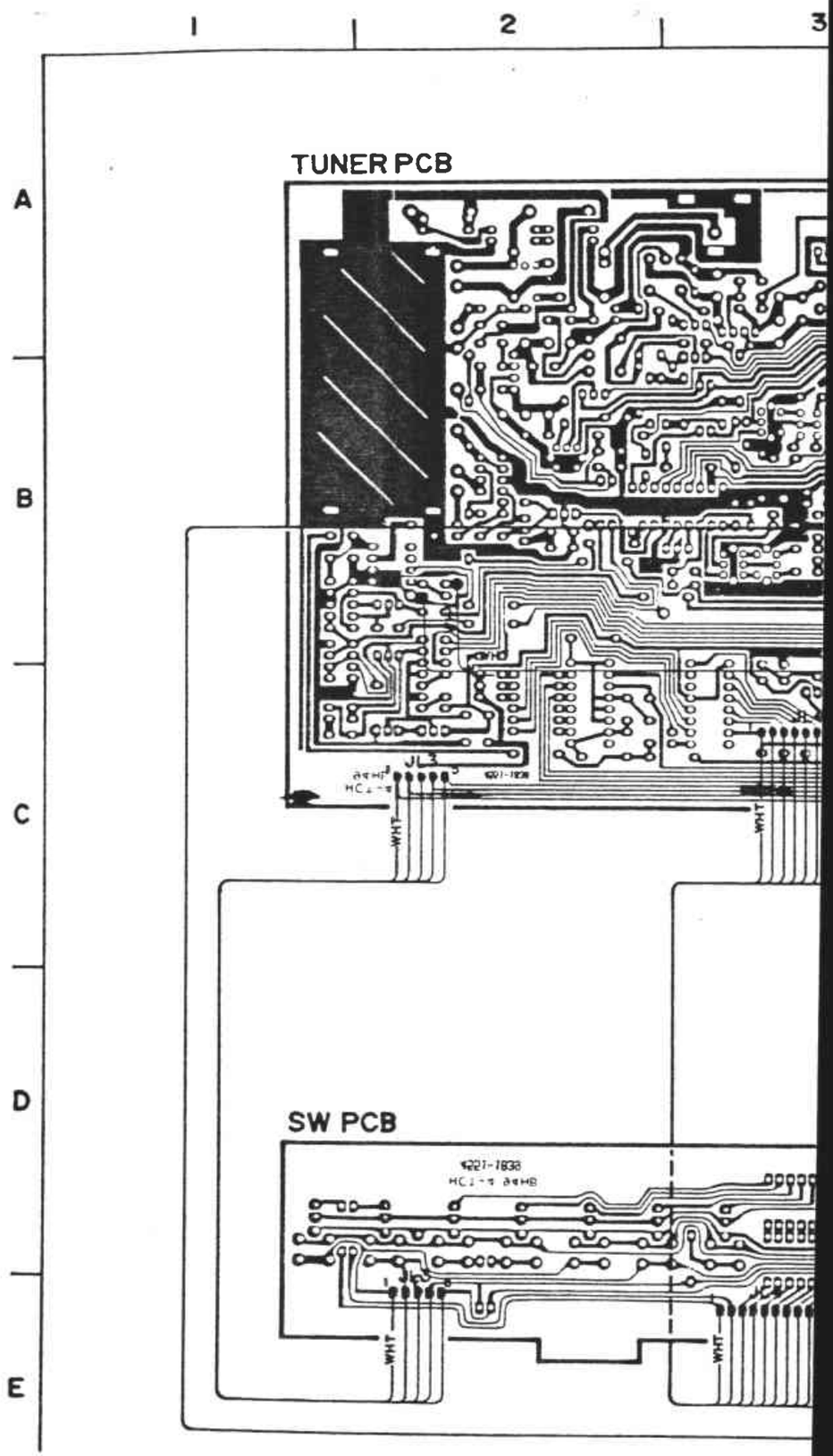

DA-F603 DA-F603

4 5 6

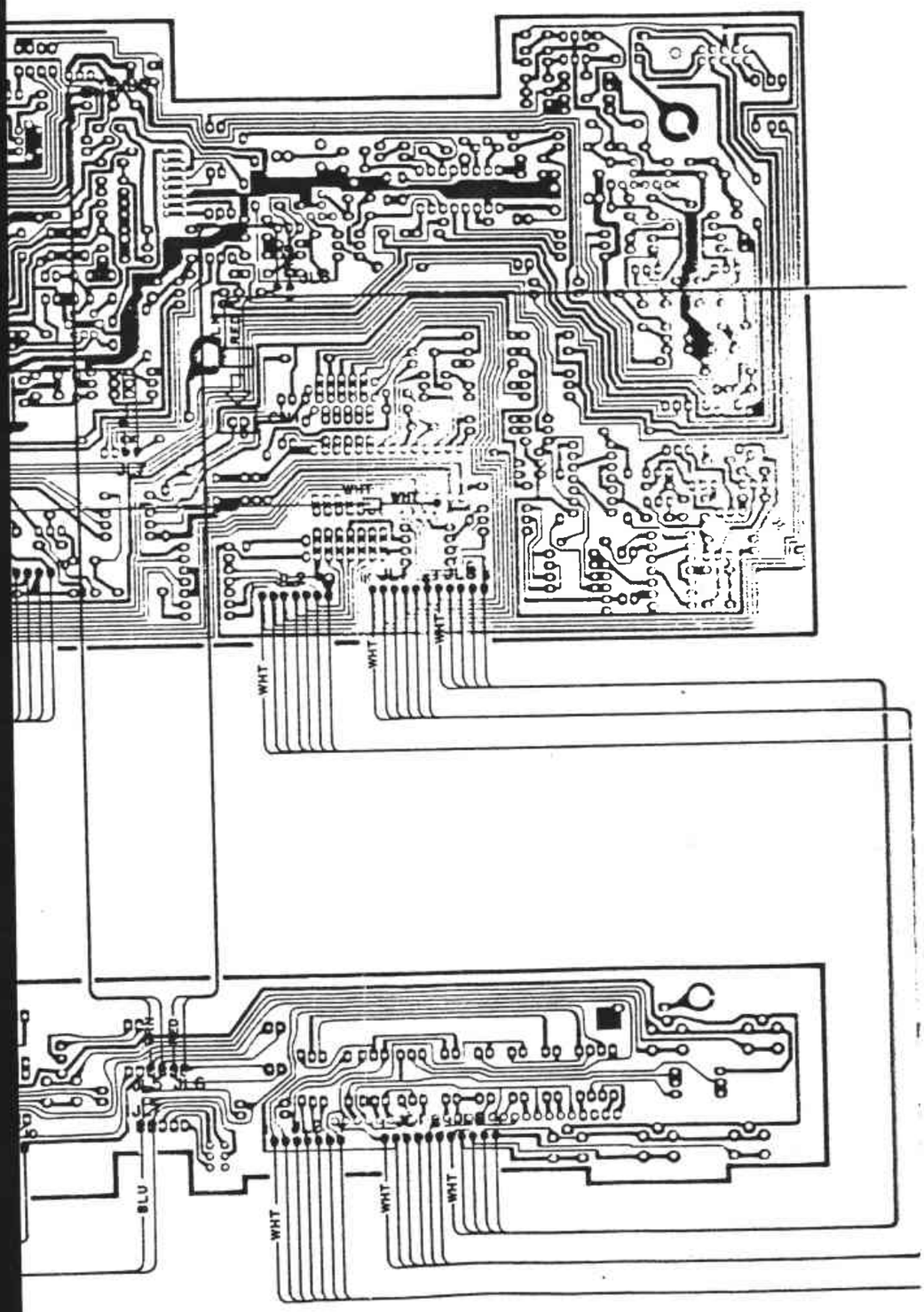

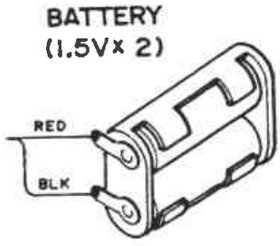


NOTE:

1. The actual colors of wires may differ from those of this diagram.
   Wire colors are abbreviated as follows.

| | | | |
|---|---|---|---|
| BRN | Brown | YEL | Yellow |
| PPL | Purple | RED | Red |
| GRN | Green | GRY | Gray |
| ORG | Orange | BLU | Blue |
| WHT | White | BLK | Black |

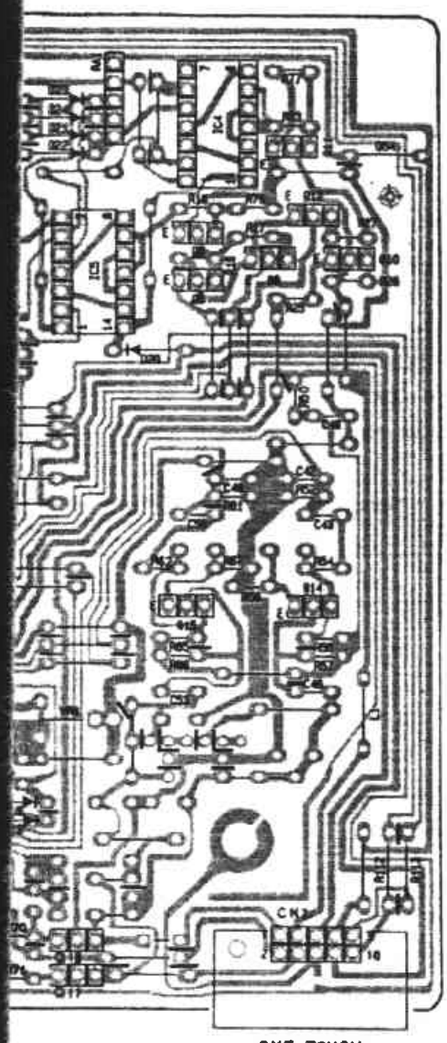

ONE TOUCH
CONNECTOR

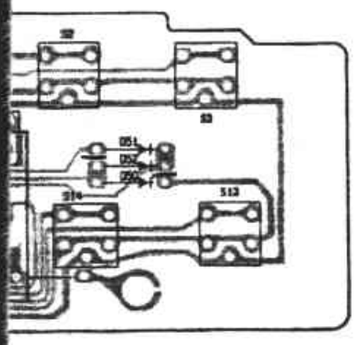

## PRINTED CIRCUIT BOARDS

### TUNER P.C.B.

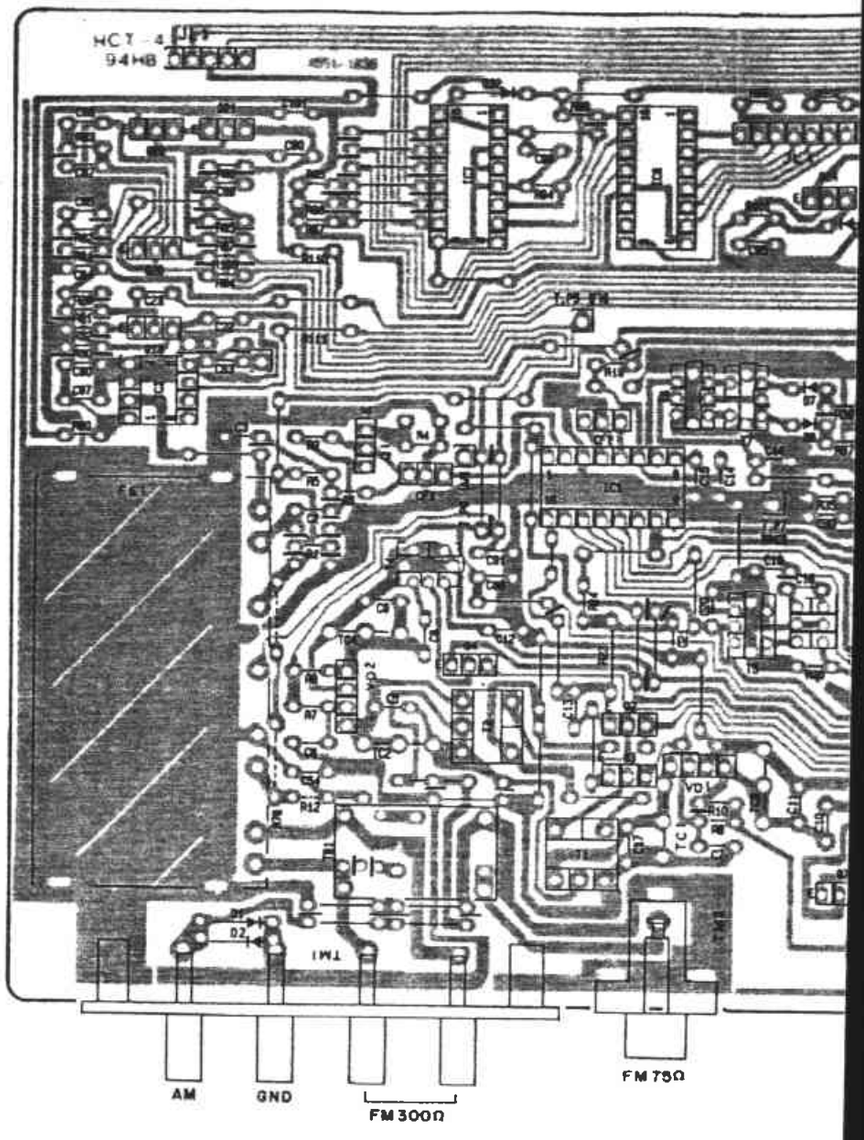


### SW P.C.B.

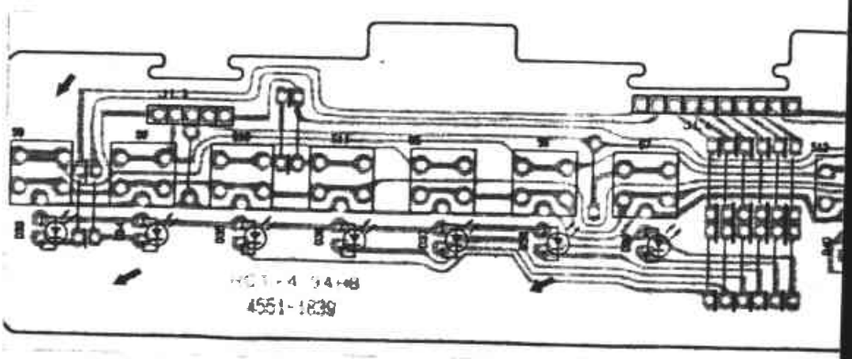

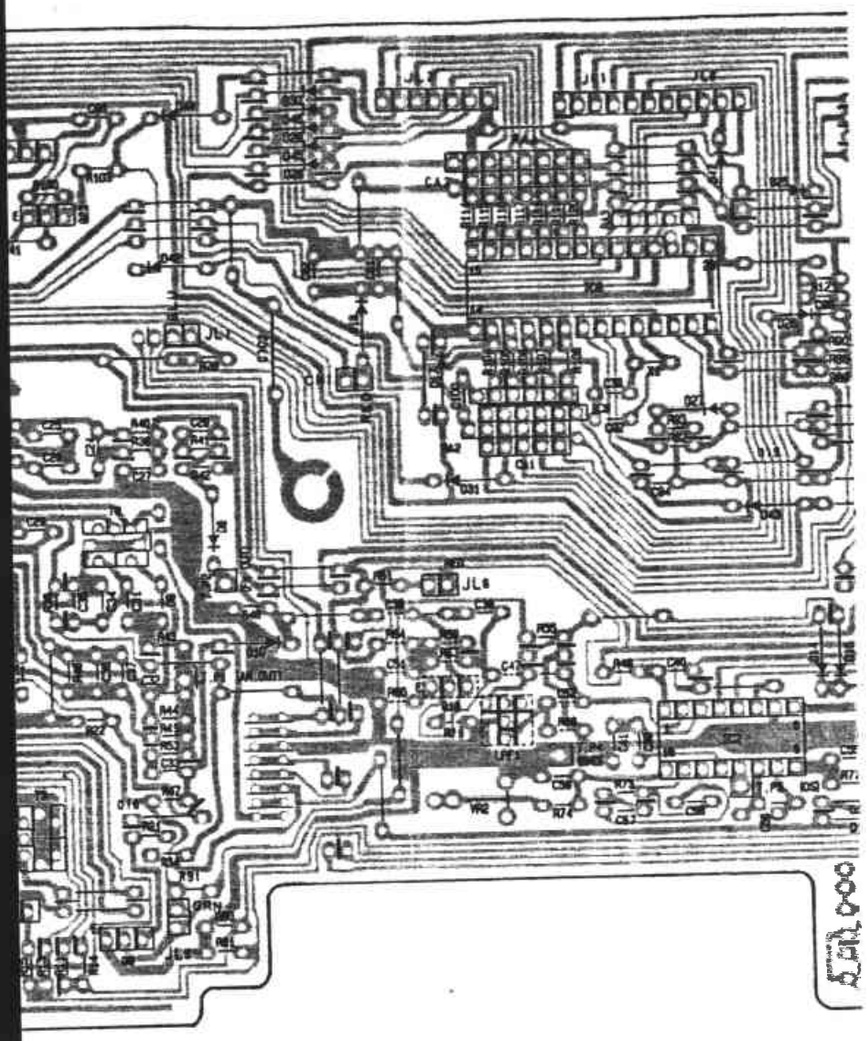

DA-F603

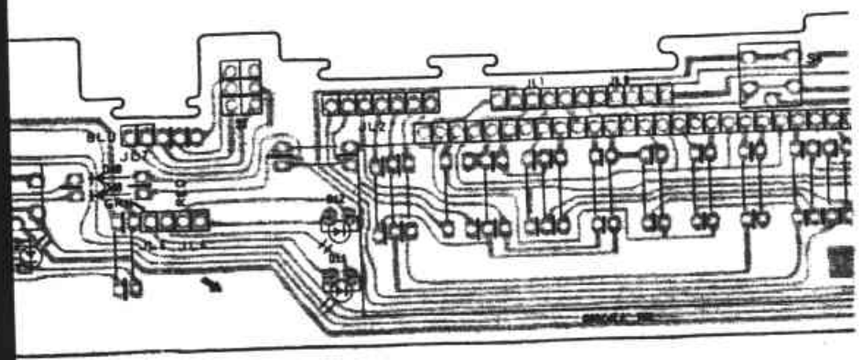

## PRINTED CIRCUIT BOARDS

### TUNER P.C.B.

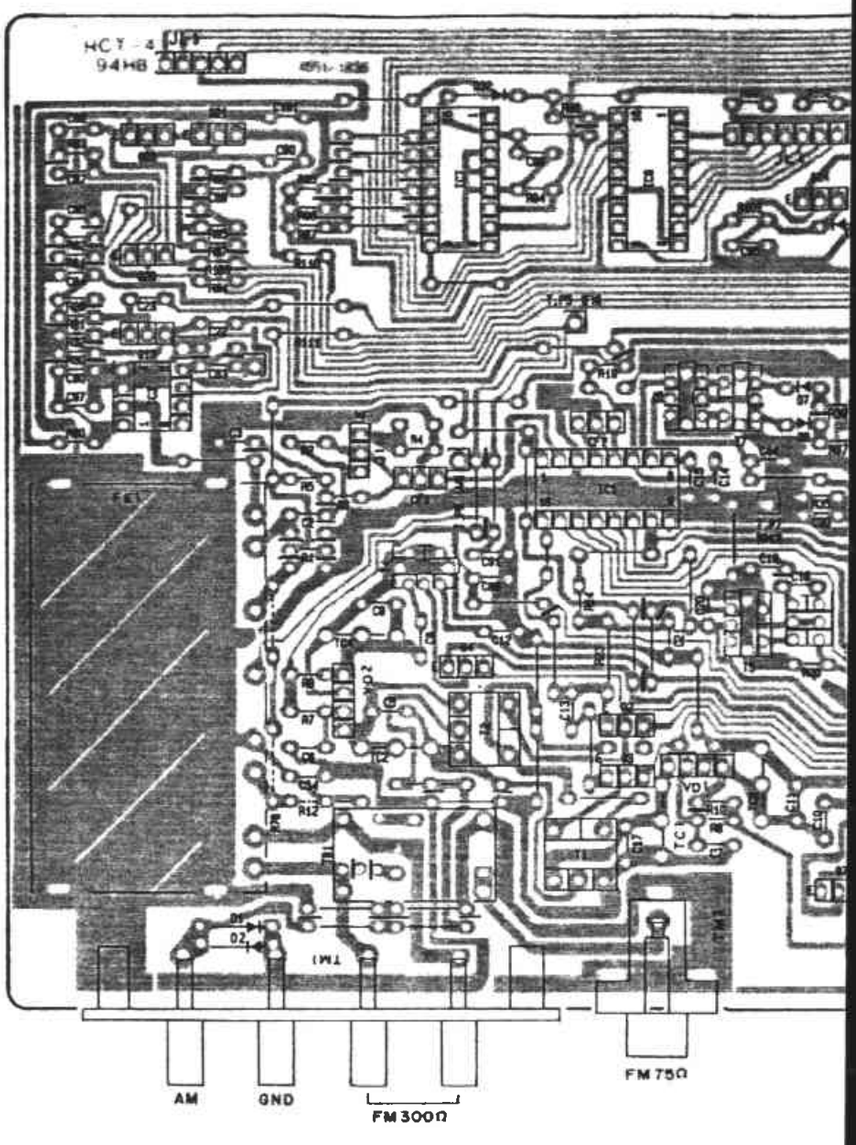


### SW P.C.B.

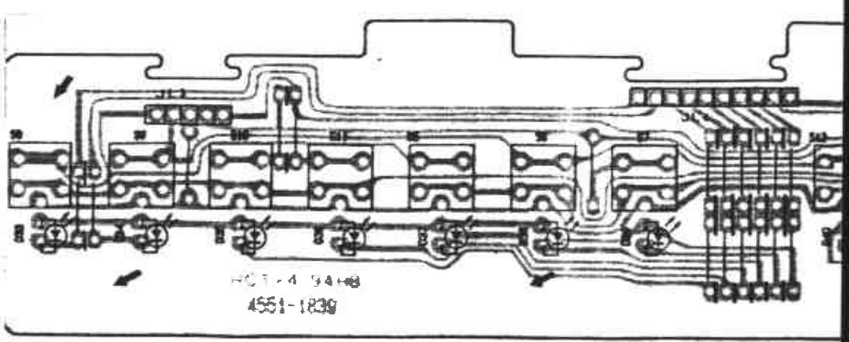

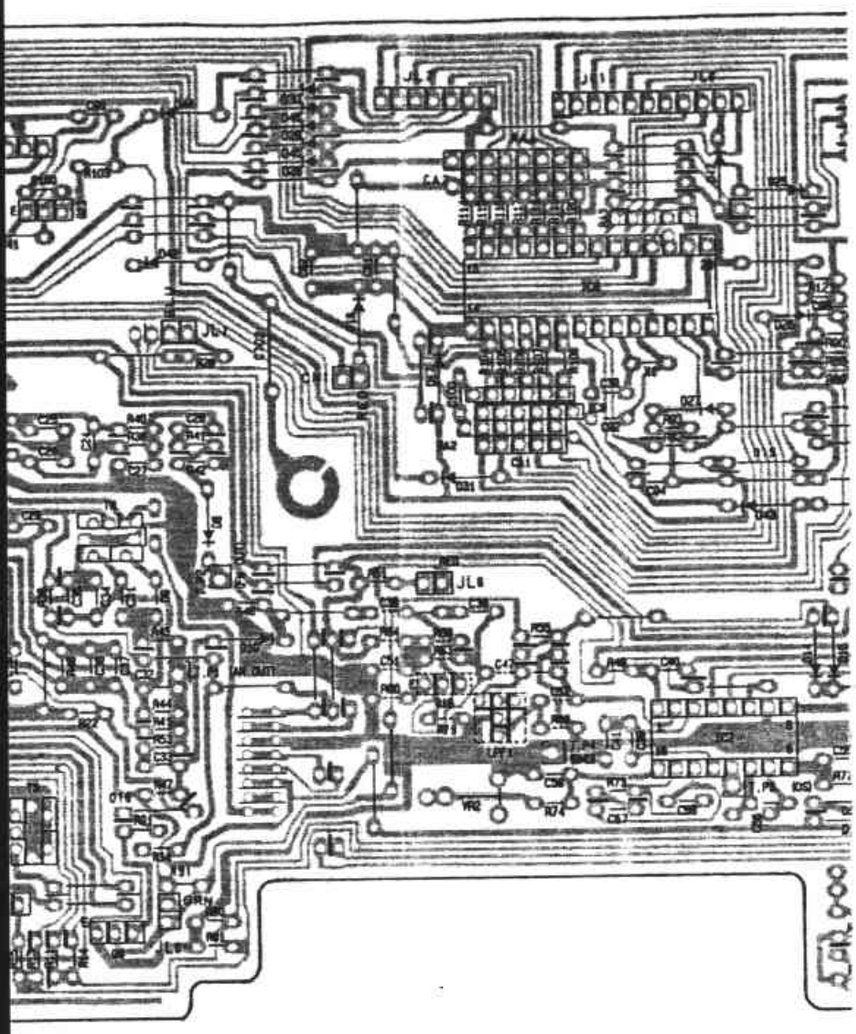

DA-F603

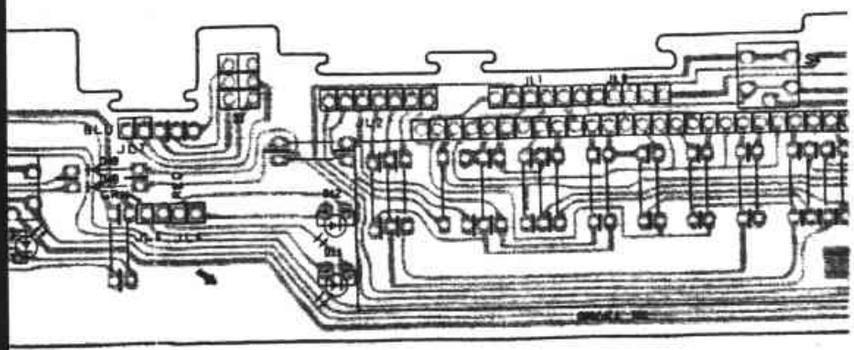

## EXPLODED VIEW OF CABINET

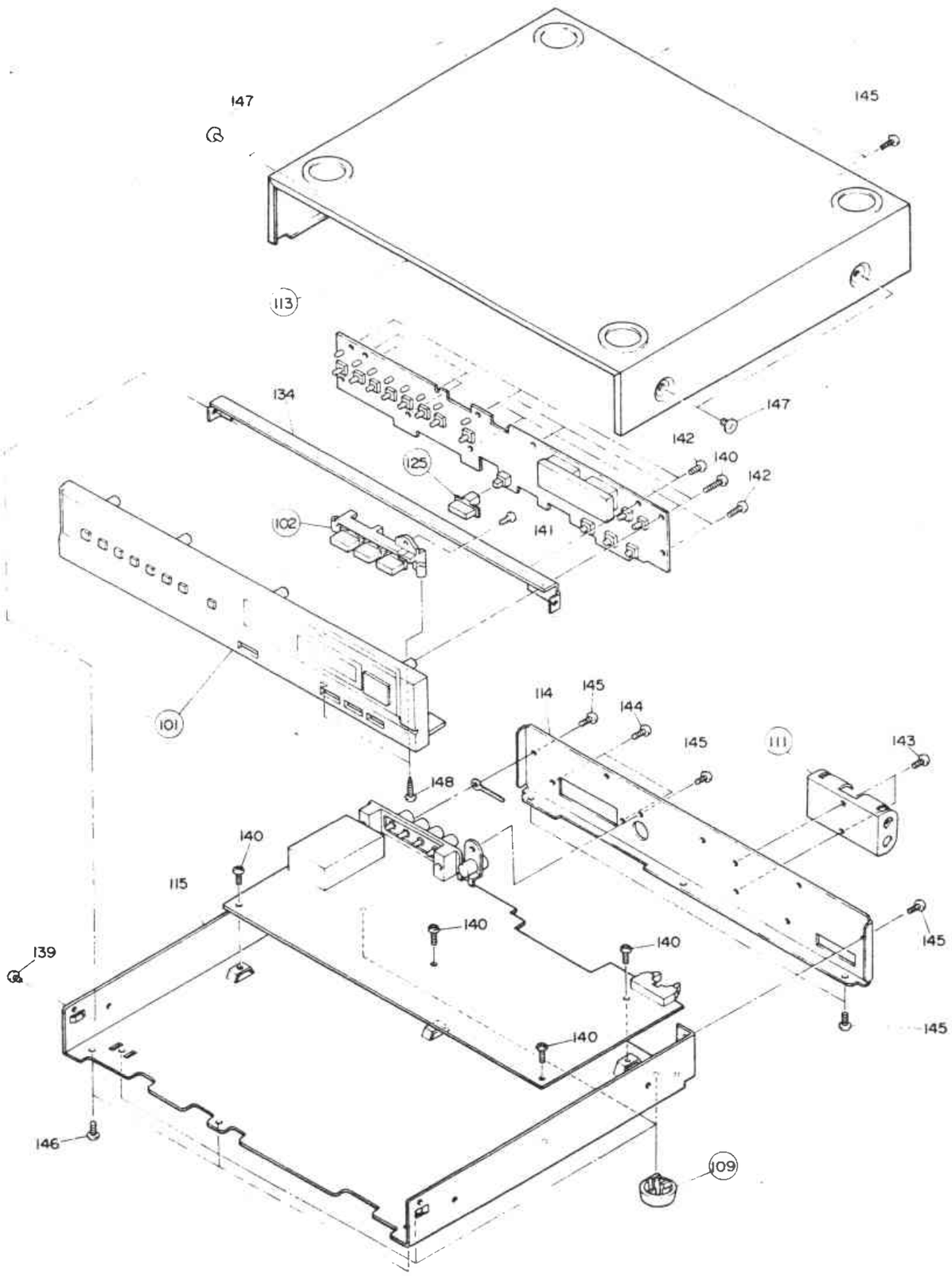

## PARTS LIST

NOTE: ⚠ and [redacted] designates components on the Parts list that have special characteristics to maintain the safety performance of this unit. When replacing any of these parts, be sure to use only specified parts.

| Symbol No. | Parts No. | Description |
|---|---|---|
| 101 | M07A25100 | Front Panel Ass'y |
| 102 | M07A25201 | Knob Ass'y |
| 109 | M04A10191 | Leg |
| 111 | M07A25160 | Battery Case |
| 113 | M07A25162 | Top Cover |
| 114 | | Back Panel |
| 115 | | Chassis Base |
| 125 | M07A25200 | Push Knob (Mode) |
| 134 | | Holder |
| 139 | | T-Screw 3 x 7 |
| 140 | | T-Screw 3 x 5 |
| 141 | | T-Screw 3 x 7 |
| 142 | | T-Screw 3 x 7 |
| 143 | | T-Screw 2.5 x 7 |
| 144 | | T-Screw 2 x 5 |
| 145 | | T-Screw 3 x 5 |
| 146 | | T-Screw 3 x 5 |
| 147 | | T-Screw 4 x 5 |
| 148 | | T-Screw 3 x 10 |

| Symbol No. | Parts No. | Description |
|---|---|---|
| | **Diodes** | |
| D1 | M05252320 | 1S1555 |
| D2 | M05252320 | 1S1555 |
| D6 | M07A25320 | 20A90H |
| D7 | M07A25320 | 20A90H |
| D8 | M05252320 | 1S1555 |
| D9 | M07A25321 | 0A90M |
| D10 | M05252320 | 1S1555 |
| D11 | M07A25326 | LN39GPL |
| D12 | M07A25325 | LN29RPL |
| D13 | M05252320 | 1S1555 |
| D14 | M05252320 | 1S1555 |
| D15 | M05252320 | 1S1555 |
| D16 | M05252320 | 1S1555 |
| D17 | M05255320 | S5566B |
| D18 | M05252320 | 1S1555 |
| D19 | M04A21321 | RD4.3EB2 |
| D20 | M05252320 | 1S1555 |
| D21 | M05252320 | 1S1555 |
| D22 | M05252320 | 1S1555 |
| D23 | M05252320 | 1S1555 |
| D24 | M05252320 | 1S1555 |
| D25 | M05252320 | 1S1555 |
| D26 | M05252320 | 1S1555 |
| D27 | M05252320 | 1S1555 |
| D28 | M05252320 | 1S1555 |
| D29 | M05252320 | 1S1555 |
| D30 | M02525320 | 1S1555 |
| D31 | M05252320 | 1S1555 |
| D32 | M05252320 | 1S1555 |
| D33 | M07A25326 | LN39GPL |
| D34 | M07A25326 | LN39GPL |
| D35 | M07A25326 | LN39GPL |
| D36 | M07A25326 | LN39GPL |
| D37 | M07A25326 | LN39GPL |
| D38 | M07A25326 | LN39GPL |
| D39 | M07A25326 | LN39GPL |
| D40 | M07A25325 | LN29RPL |
| D41 | M05252320 | 1S1555 |
| D42 | M05252320 | 1S1555 |
| D43 | M05252320 | 1S1555 |
| D44 | M05252320 | 1S1555 |
| D45 | M05252320 | 1S1555 |
| D46 | M05252320 | 1S1555 |
| D47 | M05252320 | 1S1555 |
| D48 | M05252320 | 1S1555 |
| D49 | M05252320 | 1S1555 |
| D50 | M05252320 | 1S1555 |
| D51 | M05252320 | 1S1555 |
| D52 | M05252320 | 1S1555 |
| D53 | M05252320 | 1S1555 |
| D54 | M07A25322 | RD16EB2 |
| VD1 | M05232323 | KV1236Z |
| VD2 | M05232323 | KV1236Z |
| | **Transistors** | |
| Q1 | M05232301 | 2SC1923 (Y) |
| Q2 | M05237300 | 2SC1815 (BL) |
| Q3 | M05237300 | 2SC1815 (BL) |

| Symbol No. | Parts No. | Description |
|---|---|---|
| Q4 | M05237300 | 2SC1815 (BL) |
| Q5 | M05237300 | 2SC1815 (GR) or (Y) |
| Q6 | M05237300 | 2SC1815 (GR) or (Y) |
| Q7 | M05237300 | 2SC1815 (BL) |
| Q8 | M05256300 | 2SA1015 (GR) or (Y) |
| Q9 | M05237300 | 2SC1815 (GR) or (Y) |
| Q10 | M05237300 | 2SC1815 (GR) or (Y) |
| Q11 | M05237300 | 2SC1815 (GR) or (Y) |
| Q12 | M05256300 | 2SA1015 (GR) or (Y) |
| Q13 | M05237300 | 2SC1815 (GR) or (BL) |
| Q14 | M05237300 | 2SC1815 (Y) |
| Q15 | M05237300 | 2SC1815 (Y) |
| Q16 | M04200301 | 2SD1450 (R) or (S) |
| Q17 | M04200301 | 2SD1450 (R) or (S) |
| Q20 | M05237300 | 2SC1815 (BL) |
| Q21 | M05237300 | 2SC1815 (Y) |
| Q22 | M05237300 | 2SC1815 (Y) |
| Q23 | M05237300 | 2SC1815 (BL) |
| Q24 | M05256300 | 2SA1015 (GR) |
| | | IC's |
| IC1 | M05A01311 | LA1207 |
| IC2 | M05181343 | LA3361 |
| IC3 | M04A01315 | μPB553AC |
| IC4 | M07297343 | TC4011BP |
| IC5 | M07297343 | TC4011BP |
| IC6 | M04A01316 | μPD1703C-18 |
| IC7 | M07A25310 | TC4035BP |
| IC8 | M07A25311 | M74LS42P |
| IC9 | M04A01314 | TA57 |
| | | ELECTRICAL PARTS |
| CF1 | M04A01445 | CERAMIC FILTER |
| CF2 | M04A01445 | CERAMIC FILTER |
| CF3 | M07A25445 | CERAMIC FILTER |
| R50 | M07A25450 | R FUSE 220 ⚠ |
| R112 | M04207458 | R FUSE 4.7 ⚠ |
| R113 | M04207458 | R FUSE 4.7 ⚠ |
| S1 | M04A06356 | SW PUSH (STEREO/MONO) |
| S2 | M07A25356 | SW PUSH (MW) |
| S3 | M07A25356 | SW PUSH (FM) |
| S4 | M07A25356 | SW PUSH (LW) |
| S5 | M07A25355 | SW PUSH |
| S6 | M07A25355 | SW PUSH |
| S7 | M07A25355 | SW PUSH |
| S8 | M07A25355 | SW PUSH |
| S9 | M07A25355 | SW PUSH |
| S10 | M07A25355 | SW PUSH |
| S11 | M07A25355 | SW PUSH |
| S12 | M07A25355 | SW PUSH |
| S13 | M07A25355 | SW PUSH |
| S14 | M07A25355 | SW PUSH |
| T1 | M04A01515 | COIL CASE 10 (MW RF) |
| T2 | M04A01517 | COIL CASE 10 (LW RF) |

| Symbol No. | Parts No. | Description |
|---|---|---|
| T3 | M07A25512 | OSC COIL 7 (MW OSC) |
| T4 | M07A25511 | OSC COIL 7 (LW OSC) |
| T5 | M07A25502 | IFT AM 7 |
| T6 | M05A01505 | DISCRI 7 (FM) |
| T7 | M05A01506 | DISCRI 7 (FM) |
| T8 | M05A01503 | IFT AM 7 (DET) |
| TC1 | M07A25426 | TRIMER 1P (MW) |
| TC2 | M07A25425 | TRIMER 1P (LW) |
| TC3 | M07A25426 | TRIMER 1P (MW) |
| TC4 | M07A25425 | TRIMER 1P (LW) |
| TD1 | M07A25340 | FIP7Q8D (Tube Display) |
| VR1 | M05A01410 | VR SEMI 1K |
| VR2 | M05A01411 | VR SEMI 10K |
| X1 | M04207510 | CRYSTAL OSC |
| L1 | M05A01513 | COIL W/CORE |
| TB1 | M07A25510 | COIL W/CORE |
| FE1 | M04207548 | FM FRONT END |
| TM1 | M07A25480 | TERMINAL (4P) |
| TM2 | M07A25481 | ONE TOUCH CONNECTOR |