MITSUBISHI
AUDIO SYSTEMS

SERVICE MANUAL

COMPACT DISC PLAYER

MODEL DP-45P

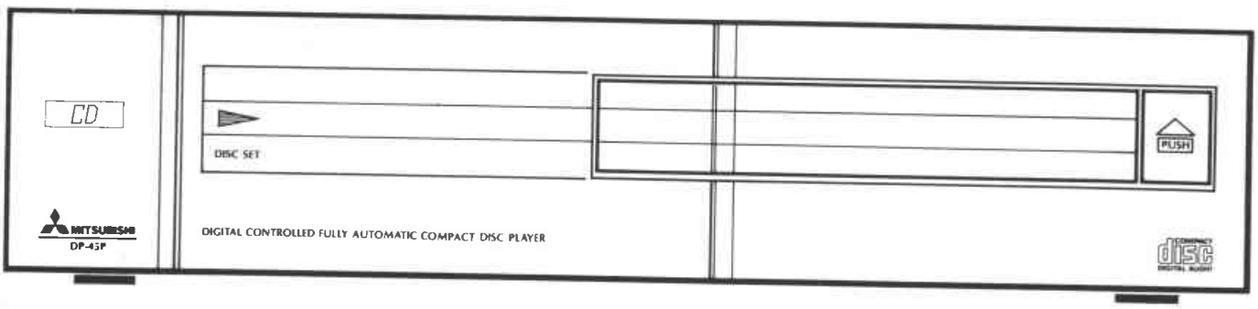

CONTENTS

SPECIFICATIONS 2
FRONT PANEL TERMINOLOGY AND FUNCTIONS 3
DISASSEMBLING PROCEDURE 4
ADJUSTMENT PROCEDURE 6
TROUBLESHOOTING 15
INTERNAL DIAGRAMS AND PINOUT OF INTEGRATED CIRCUITS 20
BLOCK DIAGRAM 27
WIRING DIAGRAM 27
PRINTED CIRCUIT BOARD 28
SCHEMATIC DIAGRAM 35
EXPLODED VIEW 39
PACKING INSTRUCTIONS 41
PARTS LIST 43

MITSUBISHI ELECTRIC CORPORATION

SPECIFICATIONS

THIS UNIT CAN BE USED ONLY WITH THE MITSUBISHI RECEIVER MODEL DA-R45P AND CAN NOT BE CONNECTED TO ANY OTHER AMPLIFIER OR RECEIVER.

All operations except loading a disc can be done by pressing the buttons on the controller of the receiver. Please see the instruction book of the receiver for playback and selecting tracks.

Type	Compact disc type
Channels	Two-channel stereo
Sampling frequency	44.1 kHz
Digital-to Analog conv.	16 bit linear
Frequency response	20 – 18,000 Hz ± 1 dB
Dynamic range	Better than 90 dB (at 1 kHz)
Harmonic distortion	Less than 0.008 % (at 1 kHz, 0 dB)
Channel separation	Better than 84 dB (at 1 kHz)
Wow and flutter	Below measurable limits
Weight	4.0 kg (8 lb 13 oz)
Dimensions (W x H x D)	350 x 77 x 280 mm (13-3/4 x 3 x 11")

Specifications subject to modification without notice for improvement.

FRONT PANEL TERMINOLOGY AND FUNCTIONS

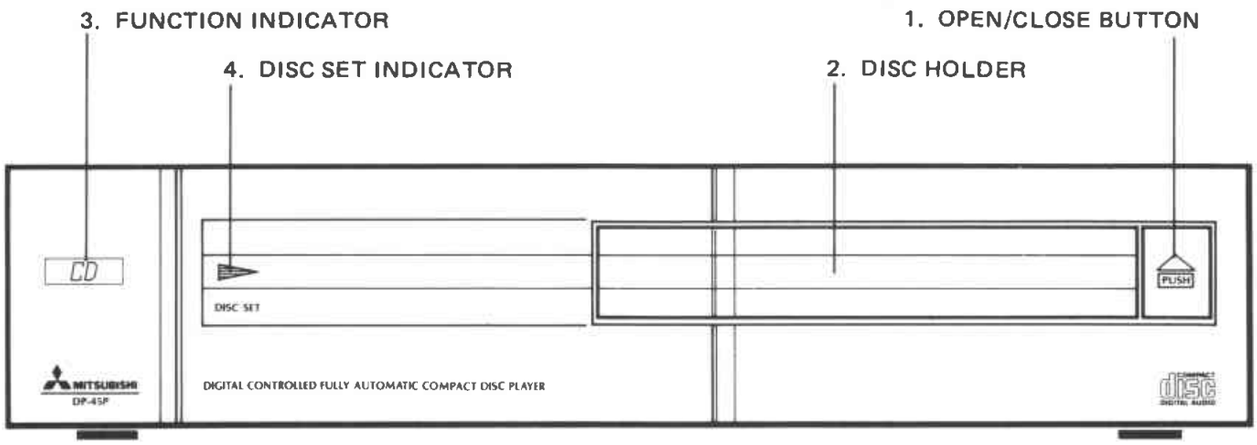

1. OPEN/CLOSE Button (Disc Holder Open/Close Button)
Push to open and close the disc holder. Cannot be operated when the power is off.

2. DISC HOLDER
Load the compact disc here.
Push the OPEN/CLOSE button with the power on and the disc holder opens. Place the compact disc onto the disc holder, push the OPEN/CLOSE button again and the disc holder closes.

3. FUNCTION Indicator
This indicator illuminates when this unit is operated for playback.

4. DISC SET Indicator
This indicator illuminates when the disc is loaded.

CLASS 1 LASER PRODUCT
Product complies with DHHS rules CFR subchapter J part 1040:10 at date of manufacture.

DANGER—invisible laser radiation when open and interlock failed or defeated. Avoid direct exposure to the beam.

CAUTION—use of all controls, adjustments or performance of procedures other than those specified herein may result in hazardous radiation exposure.

Do not power on the unit when Holder and Holder Ass'y (part 15, 17 in page 39) is removed or when Optical Pickup (part 52 in page 39) is removed from the mechanism assembly.

DISASSEMBLING PROCEDURE

1. Removal of the fixing screws used for transportation

1) Remove two red transit packing screws on the bottom of the unit used for transportation. (Fig. 1)

Note: Keep the transit packing screws in a secure location after removal in the event transport of this unit is required.

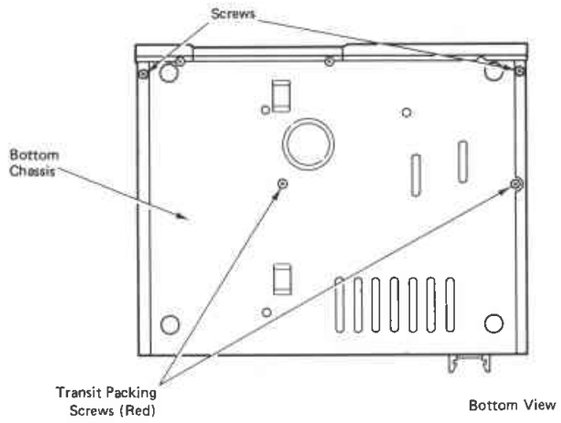

Fig. 1

2. Removal of the top cover

1) Remove two screws (Fig. 1) from the bottom chassis, and remove three screws from the back chassis. (Fig. 2)
2) Remove th top cover by sliding it to backward. When sliding, pay attention not to damage the lead wires inside of the unit.

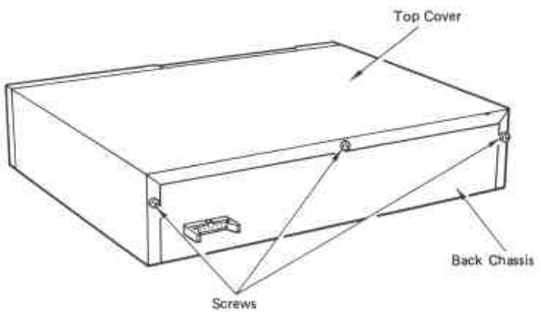

Fig. 2

3. Removal of the Mechanism Assembly

1) Remove two screws fixing PCB PB-1 from the chassis. (Fig. 3)
2) Take off four connectors (J202, J203, J205, J402) from PCB PB-1.
3) Remove two screws fixing PCB PB-2 from the chassis. (Fig. 4)
4) Take off the connector (J302) and a GND wire from PCB PB-2.
5) Remove four screws fixing mechanism ass'y from the chassis. (Fig. 4)
6) Pull back the mechanism ass'y to the rear side first, and then take out the ass'y from the tail end as shown by arrow mark, paying attention not to damage the mechanism ass'y when take it out.

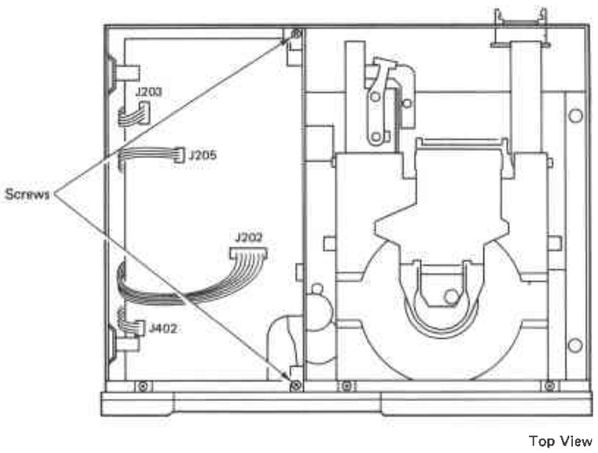

Fig. 3

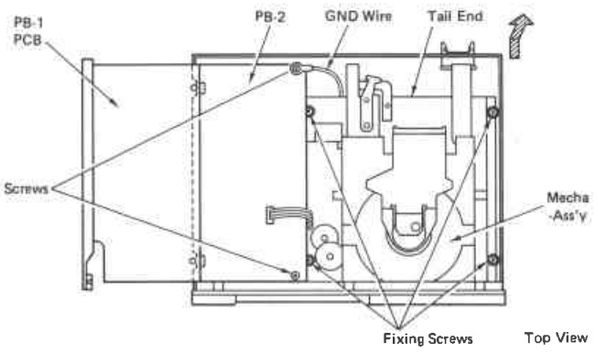

Fig. 4

4. Removal of the Optical Pickup

1) Let the mechanism ass'y be upside down.
2) Remove the E-ring (ⓓ = 3 mm) which fixes the rotary shaft of the lever, and remove the spring. (Fig. 5)

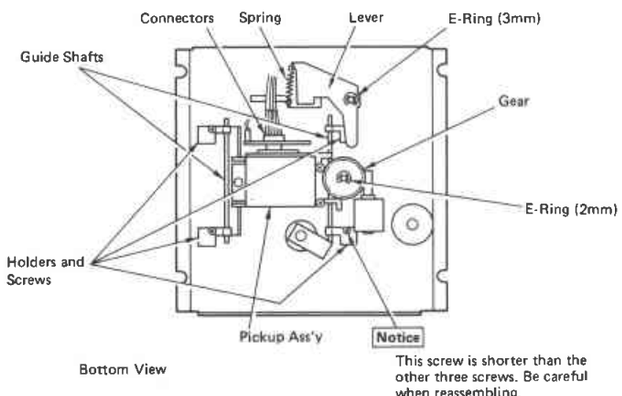

Fig. 5

3) Take out the lever.
4) Remove the E-ring (ⓓ = 2 mm) which fixes the rotary shaft of the gear.
5) Take out the gear.
6) Remove four screws and take off four holders which hold two guide shafts. (See the Notice in the Fig. 5)
7) Take off three connectors which are connected with optical pickup.
8) Take out the pickup ass'y.
9) Remove three screws from the pickup holder, and the optical pickup is now removed. (Fig. 6)
10) Insert the short-connector, (Fig. 7) provided in the service part package of pickup besides pickup itself.

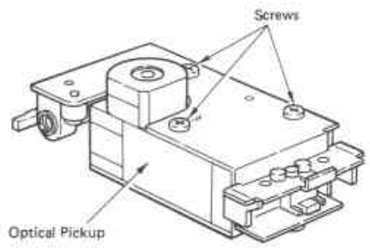

Fig. 6

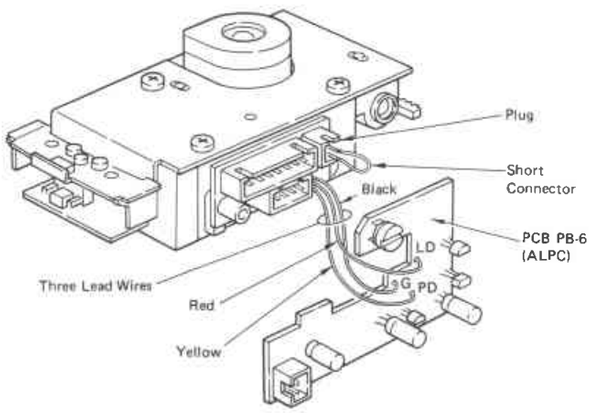

Fig. 7

Caution:
If the short connector is not inserted, laser diode may be broken.

11) Now it is allowed to remove three lead wires by soldering from PCB, PB-6 (ALPC).
12) Replace the pickup with new one.
13) Connect three lead wires to the PCB PB-6 attached to the pickup by soldering, and then take off short-connector from the new pickup.
    - Pickup lead connection
      Red lead → LD
      Yellow lead → PD
      Black lead → G

5. Reassembling the mechanism after replacing the optical pickup.

Follow the procedure 1 ~ 4 in the reverse order to reassemble the mechanism after replacing the optical pickup. When reassembling, pay attention not to damage the unit.

PICKUP INCLINATION ADJUSTMENT PROCEDURE

1. Pickup inclination adjustment

After replacing the pickup, it is necessary to fine-adjust J (Jitter) direction and R (Radial) direction of pickup inclination.

Fine-adjust inclination of the pickup by turning the J direction and R direction adjusting screws of the mechanism ass'y. (Fig. 8)

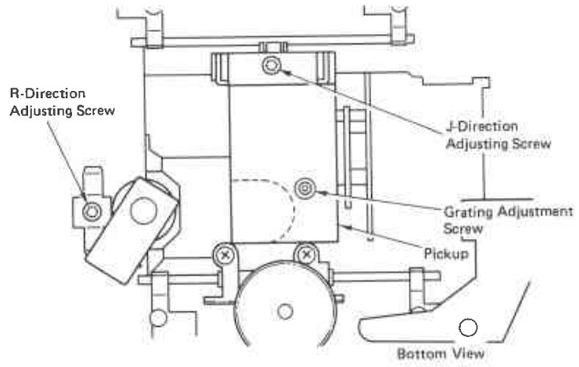

Fig. 8

2. Equipment and tools used for adjustment

1) Test disc ..... CBS SONY, TYPE 3 or any other ordinary disc is subsitutive.
2) Dual trace synchroscope.
3) Signal input probe x 2
4) Hexagon screwdriver: 2.4 mm

3. Confirmation items before adjustment

1) Confirm that the ALPC (Automatic Laser Power Control) circuit and Grating plate are surely adjusted. (Refer to the item "Servo Adjustment")
2) Confirm that the installation distance between the top of turntable and the top of pickup ass'y is 11 ± 0.2 mm (Fig. 9)

Note: If the distance is out of criterion range, check if the pickup is installed in the right way. If there found no faulty about pickup installment, Disc motor ass'y including turntable must be replaced, because there is no way for adjusting the distance.

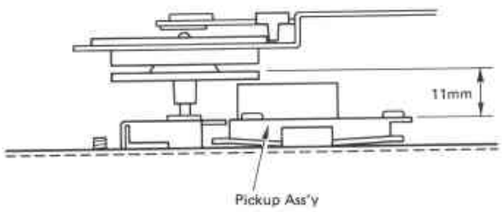

Fig. 9

4. Adjustment Procedure

1) Input the HF signal (TP. HF and G on PB-1) to CH-1 (Channel-1) of synchroscope and the TE (Tracking Error) signal (J206 1 on PB-1) to CH-2. Use CH-1 (HF) as the trigger source.
   Set the ranges of CH-1 and CH-2 to 0.5V/div, 0.5μsec/div and 0.5V/div, 2msec/div respectively.
2) Set the power supply of the unit to ON by pressing [POWER ON] key of the control unit and press the OPEN/CLOSE button of the unit, and mount the test disc (Type 3) onto the disc holder. (Fig. 10)

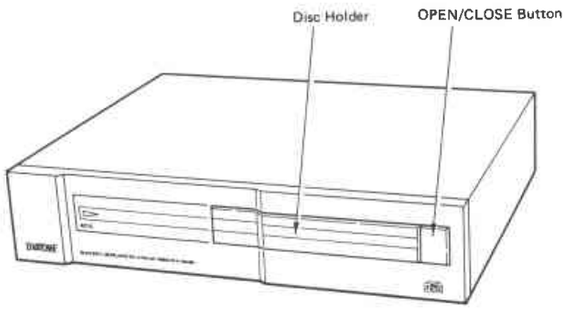

Fig. 10

3) Press the [CD] key of the control unit.
4) Confirm that the disc turns.
5) Press [CD], [*], [5] keys of the control unit to move the pickup to the position of track No. 15, or to the center position of the disc when an ordinary disc is used.
6) Confirm that the HF signal (eye pattern) shown in Fig. 11 is seen at CH-1 on the synchroscope.

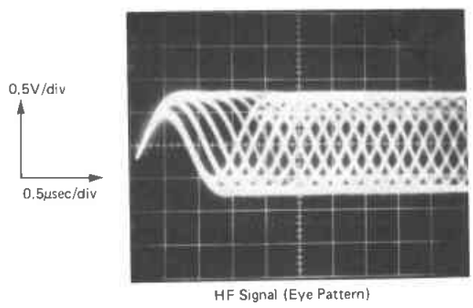

HF Signal (Eye Pattern)

Fig. 11

7) Adjsut the R-direction of the pickup. (Fig. 12)
   First, fit the hexagon screwdriver over the head of R-direction adjusting screw. Turn the adjusting screw clockwise or counterclockwise to make the HF signal shown in Fig. 13 maximum.

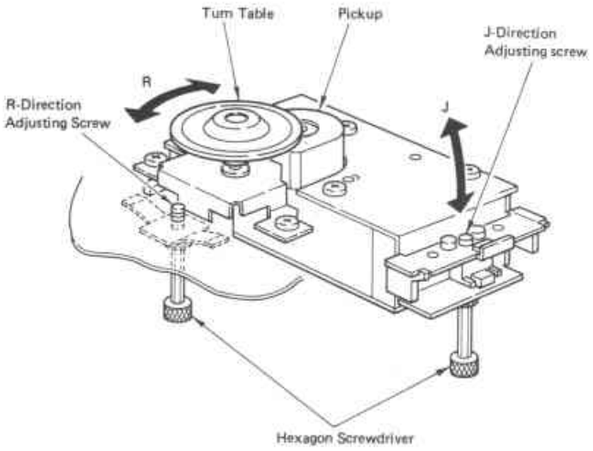

Fig. 12

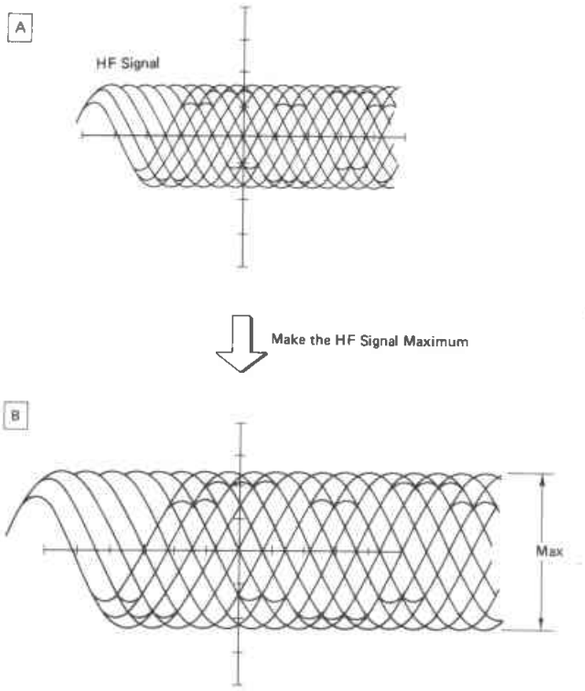

Fig. 13

8) Adjust the J-direction of the pickup. (Fig. 12)
Turn the J-direction adjusting screw so that HF signal shown in Fig. 14 is changed from state A to B.
9) Confirm that the level of HF signal is within the range of

1.5 ± 0.5V

after R and J-direction adjustment. (If less or more than 1.5 ± 0.5V, it is not acceptable.)
10) Press the STOP key of the control unit and then press CD again to play back Track No. 1. Confirm that the level of HF signal at Track No. 1 (Inner circumference of the disc) is within 1.5 ± 0.5V and that HF signal is clear as shown in Fig. 14- B .
11) Lock the head of J and R direction adjusting screws with screw locking compound after adjustment is completed.

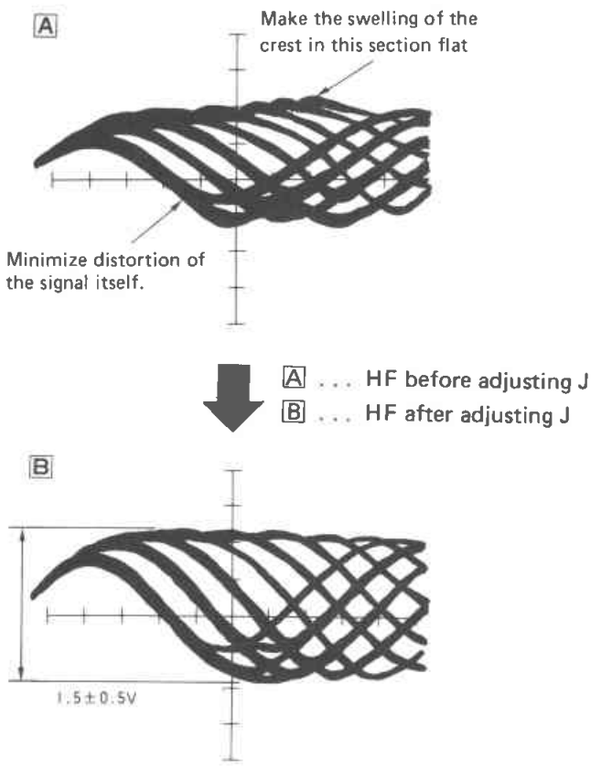

Fig. 14

SERVO ADJUSTMENT

It is required to adjust servo control circuit when pickup is replaced. Adjust the circuit according to the following procedures in the order of the adjustment item below without skipping any items except item 8 as the operation instruction is related with states of each previous step.

Adjustment Items for Pickup Servo

1. Preliminary Adjustment.
2. ALPC (Automatic Laser Power Control) Adjustment.
3. Grating Plate Adjustment.
4. ALPC Re-adjustment.
5. SL OFFSET (Slide Offset) Adjustment.
6. FS ACT OFFSET (Focus Servo Actuator Offset) Adjustment.
7. TS ACT OFFSET (Tracking Servo Actuator Offset) Adjustment.
8. FS GAIN Adjustment (Focus Servo Gain) Adjustment (FINE).
9. TS OFFSET (Tracking Servo Offset) Adjustment (COASE).
10. TS GAIN (Tracking Servo Gain) Adjustment.
11. FS OFFSET (Focus Servo Offset) Adjustment.
12. AFC (Automatic Frequency Offset) Adjustment.
13. APC (Automatic Phase Control) Adjustment.
14. TS OFFSET (Tracking Servo Offset) Adjustment (FINE).

Note : Technical terminology.

- AF (Auto Focus) in DP-103 is revised as FS (Focus Servo).
- AT (Auto Tracking) in DP-103 is revised as TS (Tracking Servo).

• Equipment and tools used for adjustment

1. Laser power meter . . . . Wavelength of 780~820mm should be measured.

   If laser power meter is not available, connect items ① ~ ③ in the configuration indicated in Fig. 15.

   1 Photo diode . . . . . SPD series (Sharp CO.)
   2 Resistor . . . . . 100 Ω
   4 Voltmeter . . . . . 50 mV full scale

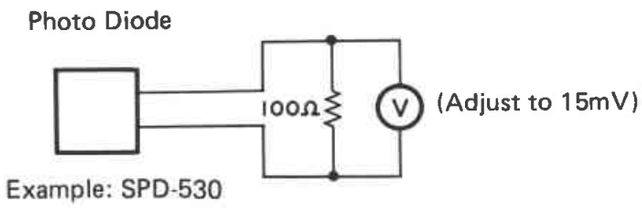

Fig. 15

2. Synchroscope . . . . . Approx. 50MHz (2 CH)
3. Frequency counter . . . . 10 MHz, Input sensitivity 1V
4. Hexagon screwdriver . . . 1.5 mm
5. Test disc . . . . . CBS SONY, TYPE 3 or any other ordinary disc is substitutive

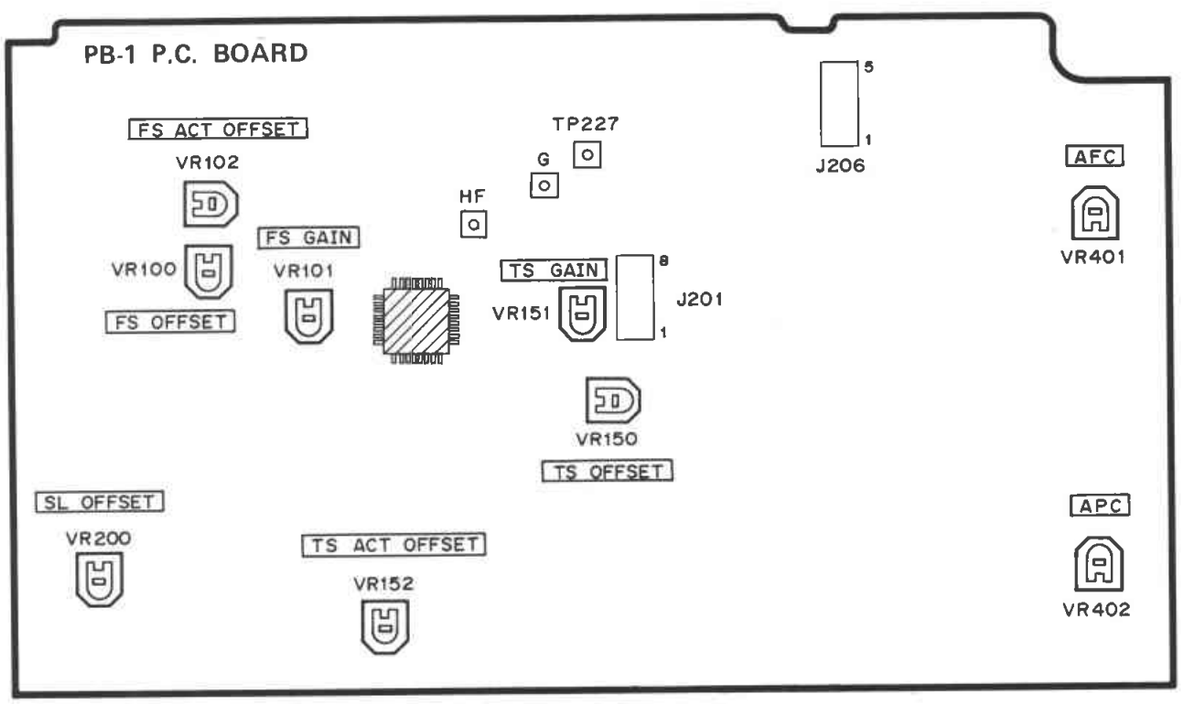

Fig. 16

PB-2 P.C. BOARD

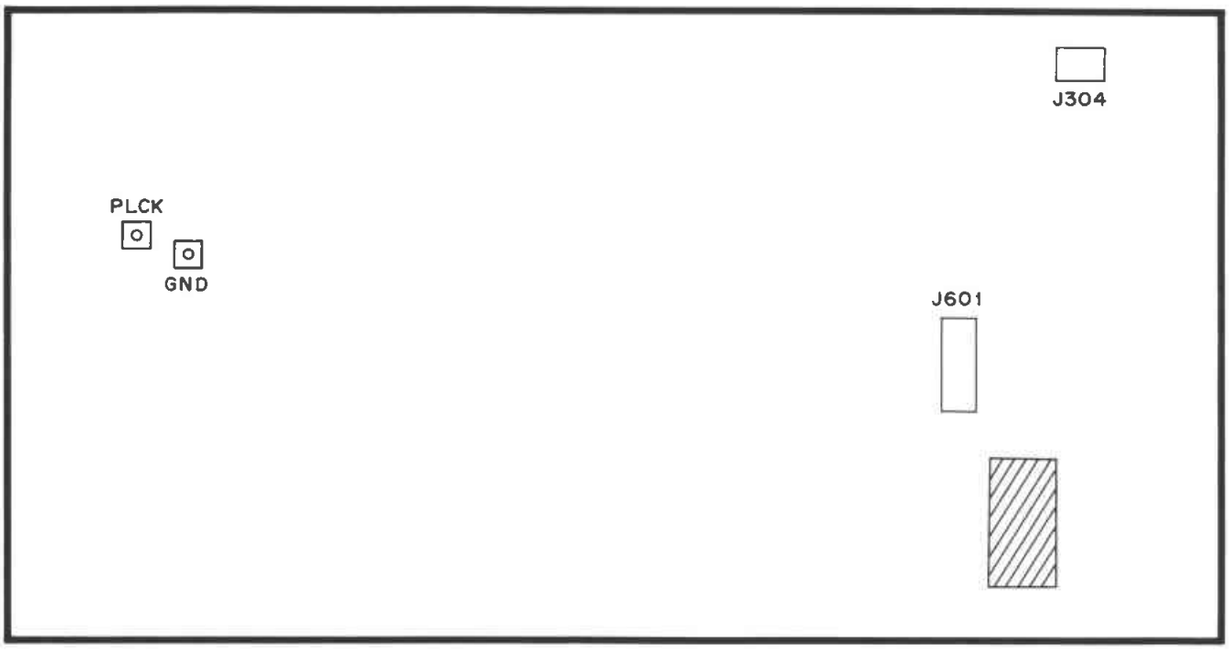

Fig. 17

1. Preliminary Adjustment

1) Short-circuit pin 1 and 2 of J304 to drive the unit in the test mode. In this test mode the state of the unit can be set by pushing CD key as follows.
   1 push . . . FS function is ON
   2 push . . . AFC function is ON . . . . . (FS is also kept ON)
   3 push . . . TS & SL function is ON . . (FS & AFC are kept ON)
   4 push . . . APC function is ON . . . . . (FS, AFC, TS & SL are kept ON)
   By pushing [STOP] key these states can be reset.
2) Set following variable resistors approximately in the center.

TS ACT OFFSET	VR152	
TS OFFSET (TE)	VR150	
FS OFFSET	VR100	
FS GAIN	VR101	. . . < Coarse adjustment
TS GAIN	VR151	of FS gain. Refer to item 8 page 10 regarding fine adjustment >

2. ALPC (Automatic Laser Power Control) Adjustment

1) Set VR991 on the PCB attached to the pickup to the minimum. Install a laser power meter or photo diode at the front of the pickup lens.
2) Push POWER ON key and push CD key once (FS mode). Check pickup lens moving three times.
3) While photo sensor of laser power meter is touched to the lens of pickup, adjust VR991 slowly to gain following laser power.
   1 When a laser power meter is used 0.3mW
   2 When a photo diode (Fig. 15) is used . . 15mV

3. Grating Plate Adjustment

1) Set a disc.
2) Push CD key twice. (AFC mode)
3) Monitor J206 pin 1 (TE) 0.2V/div 5msec/div.
4) Adjust the grating plate with 1.5mm hexagon screw driver so that Vp-p of TE becomes maximum.
   Notice : Do not rotate hexagon screw over ± 90°.

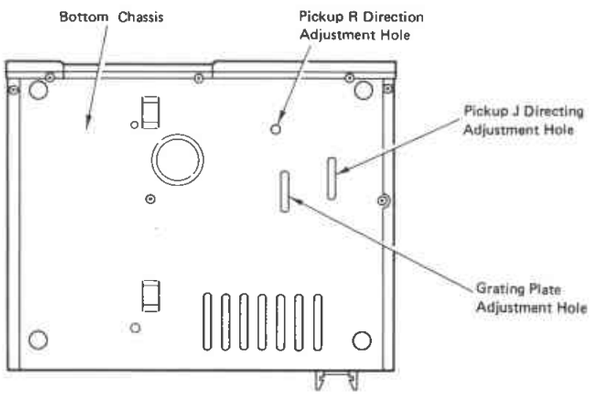

Fig. 18

4. ALPC (Automatic Laser Power Control) Re-adjustment

1) Monitor HF (High Frequency) (Test point HF, G), 0.5V/div, 5mS/div (AC).
2) Push CD key twice. (APC mode)
3) In case of 1.0V < Vp-p of HF < 2.0V
   ALPC adjustment is optimum
3) In case of 2.0V < Vp-p of HF
   Adjust VR991 so that Vp-p of HF becomes 2.0V

5. SL OFFSET (Slide Offset) Adjustment

1) Push STOP key.
2) Monitor J206 Pin 3 (SL). 0.5V/div
3) Adjust VR200 so that the level becomes 0V.

6. FS ACT OFFSET (Focus Servo Actuator Offset) Adjustment < COASE >

This item is coase adjustment for auto-focus-drawing.

1) Monitor J206 Pin 5 (FS). 0.1V/div
2) Adjust VR102 so that the level becomes 0.1V.

7. TS ACT OFFSET (Tracking Servo Actuator Offset) Adjustment

1) Push CD key twice (AFC mode)
2) Monitor HF (Test point HF, G), 0.5V/div, 1mS/div (AC)
3) Adjust VR152 so that Vp-p of HF signal becomes maximum.

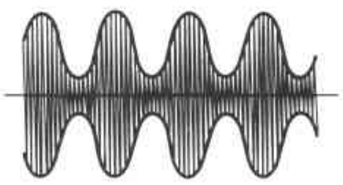

Fig. 19

8. FS GAIN (Focus Servo Gain) Adjustment < FINE >

(Fine adjustment for FS GAIN with gain adjustment apparatus)

Notice: So far as player works normal after the coarse adjustment done by VR101 at the preliminary adjustment, item 1-2 page 9, it is not necessary to perform this item.

1) Reset the mode by pushing STOP key.
2) Connect gain adjustment apparatus (Fig. 28) to J201.
3) Move the pickup to the non-data mirror area of the disc by pushing MANUAL ▷ key or MANUAL ◁ key.
4) Monitor F1, F2 terminal of gain adjustment apparatus. 0.5V/div, 0.5mS/div.
5) Push CD key once. (FS mode)
6) Adjust VR101 so that Vp-p of F1 becomes the same as that of F2.
7) Take off the apparatus from J201.

9. TS OFFSET (Tracking Servo Offset) Adjustment < COARSE >

1) Move the pickup to almost the center of the disc by pushing MANUAL ▷ key or MANUAL ◁ key.
2) Monitor J206 Pin 1 (TE). 0.2V/div, 0.5mS/div.
3) Push CD key once. (AFC mode)
4) Adjust VR150 so that the center of TE becomes 0V.

10-(A). TS GAIN (Tracking Servo Gain) Adjustment

1) Monitor HF (Test point HF, G) 0.5V/div, 0.5ms/div. (AC). Monitor TE (Test point J206 pin 1) 0.5V/div, 0.5ms/div.
   Confirm that following waveforms are observed.

- Upper part waveform :
  HF (TP-HF) 0.5V/div. 0.5ms/div.
- Lower part waveform :
  TE (J206 pin 1) 0.5V/div. 0.5ms/div.

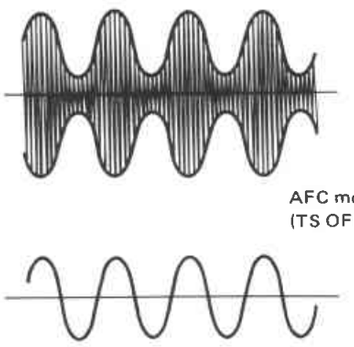

AFC mode
(TS OFF, SL OFF)

Fig. 20

2) Push CD key once (TS, SL mode)
   Waveform changes as show in Fig. 21.

These waveform represent TS servo is operating correctly, TS ON, SL ON mode.

- Upper part waveform :
  HF (TP-HF) 0.5V/div. (A.C)
- Lower part waveform :
  T.E (J206 pin 1) 0.5V/div. 0.5ms/div.

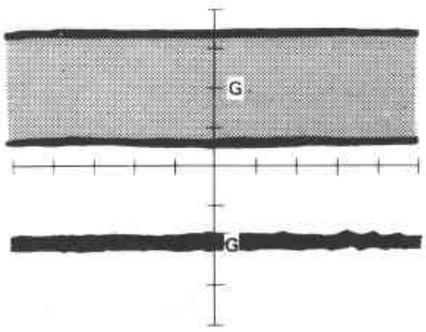

Fig. 21

3) If TE signal seems to be ocillating (TS gain is too high) as shown in Fig. 22, adjust VR151 down.

• Upper part waveform :
HF (TP-HF) 0.5V/div. (A.C)
• Lower part waveform :
T.E (J206 pin 1) 0.5V/div. 0.5ms/div.

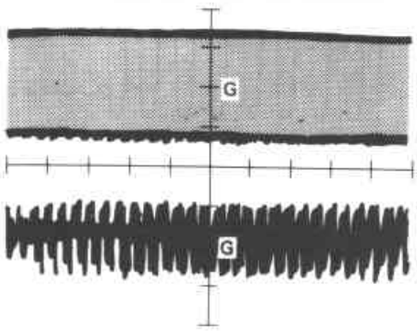

Fig. 22

10-(B). TS GAIN (Tracking Servo Gain) Fine Adjustment

Note: Procedure 10-1 ~ 10-3 are coarse adjustment without using gain adjustment apparatus (Fig. 28). This item is not necessary if player works well at coarse adjustment.

4) Monitor T1, T2 of the apparatus. 0.5V/div, 0.5mS/div
5) Adjust VR151 so that Vp-p of T1 becomes the same value as that of T2.
6) Take off the apparatus from J201.

11. TS ACT OFFSET (Tracking Servo Actuator Offset) Adjustment (FINE)

1) Monitor HF (Test point HF, G) 0.5V/div, 0.5 μs/div. (AC).
2) Adjust VR152 so that eye pattern of the HF signal (Fig. 23) becomes maximum and clearest.

• Waveform : HF (TP-HF) 0.5V div. (A.C)

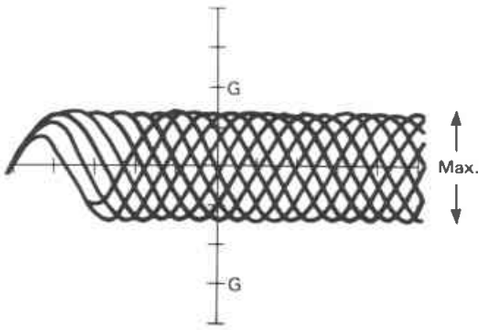

Fig. 23

12. FS OFFSET (Focus Servo Offset) Adjustment

1) Monitor HF (Test point HF, G). 0.5V/div, 0.5μS/div (AC)
2) Push CD key once (APC ON mode).
3) Adjust VR100 so that eye pattern of the HF signal (Fig. 23) is maximum and clearest.

13. AFC (Automatic Frequency Control) Adjustment

1) Push STOP key.
2) Set the pickup at the inner part of the disc by pushing MANUAL ▷ key or MANUAL ◁ key.
3) Push CD key three times (TS, SL mode)
4) Adjust VR401 to satisfy both (A) and (B) condition at the same time.
   (A) Frequency of J601 Pin 4 is 7,350 ± 8 Hz.
   (B) Waveform of CH1 (Test point HF, GND on PB-1) and CH2 (Test point PLCK, GND on PB-2) of the synchroscope shown in Fig. 24 are synchronized.

• Upper part waveform :
CH-1 HF signal (TP-HF) 0.5V/div.
• Lower part waveform :
CH-2 PLCK signal (TP-PLCK) 2V/div. 0.1μs/div.

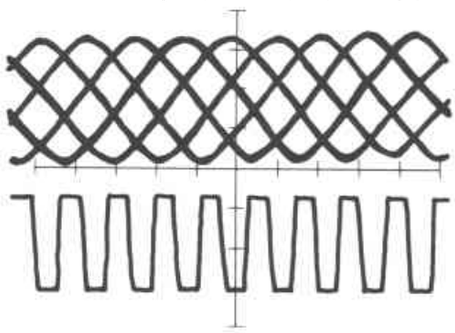

Fig. 24

• **SUPPLEMENTARY (Adjustment without using a frequency counter)**

1) Connect the synchroscope to J201 Pin 2 (PHASE) ERROR) and GND of PCB PB-1.
   Synchroscope setting: 0.2V/div, 20ms/div, DC.
2) Adjust the rate of ⋀⋀ shown in Fig. 25 to 0.2s or more to adjust the frequency as desired.
   Caution: The frequency drifts and is not stabilized at the optimum waveform shown in Fig. 25-2, so when the rate is 0.2s or more, it is acceptable.

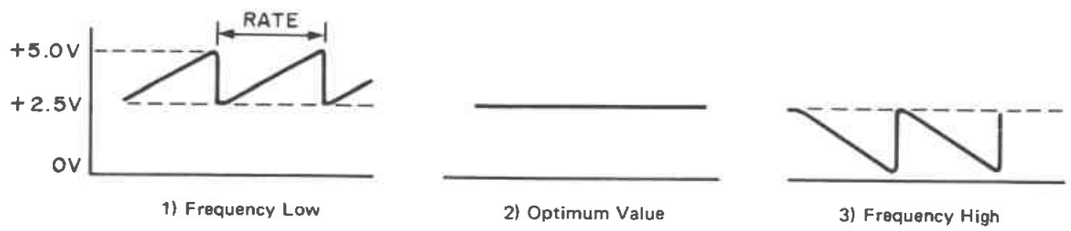

1) Frequency Low　　2) Optimum Value　　3) Frequency High

Fig. 25

14. APC (Automatic Phase Control) Adjustment

1) Monitor phase error at J201 Pin 2.
2) Push CD key once. (APC mode).
3) Adjust VR402 so that the ripple voltage becomes 0.1Vp-p or less.

15. TS OFFSET (Tracking Servo Offset) Fine Adjustment

Note: TS OFFSET Coarse Adjustment is performed at item 9 page 10.

1) Turn off the Power key.
2) Open the short circuit of Pin 1 and Pin 2 of J304 to reset the test mode.
3) Turn on the Power key.
4) Push CD button.
5) Monitor J206 Pin 1 (TE). 0.2V/div, 0.5mS/div
6) Push MANUAL ▷ or MANUAL ◁ key.
7) Adjsut VR150 so that TE signal becomes $V_A = V_B$ as show in Fig. 27.

   Note: Ground level has nothing to do with adjustment.

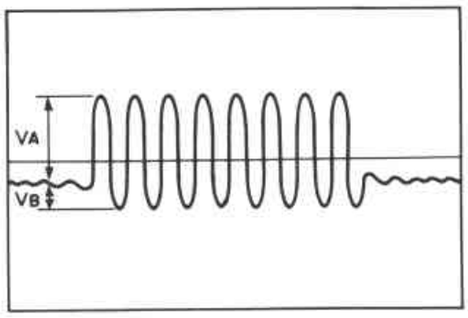

$V_A > V_B$
(Sometimes $V_A < V_B$)

Fig. 26

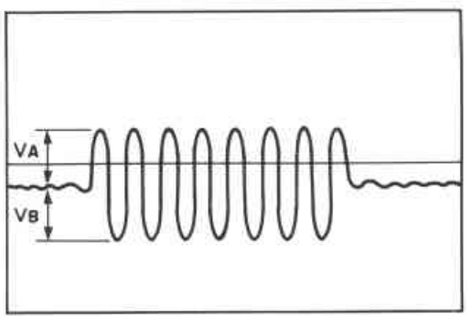

$V_A = V_B$

Fig. 27

SERVO ADJUSTMENT

Perform following adjustment after finishing No. 12 (FS OFFSET) adjustment on page. 11.(or page. 12)

PLL Adjustment

1) Push STOP key.
2) Short-circuit pin 1 and 2 of J501.
3) Adjust L503 so that the frequency of J601 pin 1 is 4.3218 ± 0.01 MHz.

Pickup Servo Adjustment Table

Item No.	Adjustment	Test Mode	Test Pin	Adjustment	Optimum Value	* Test Disc
1	Preliminary setting of VRs	Reset	—	VR100, 101, 150, 151, 152	Preset in the center.	X
2	ALPC	FS	Use Laser Power meter	VR991	Power meter 0.3mW Volt meter 15mV	X
3	Grating Plate	AFC	J206 Pin 1 (TE)	Grating Plate (1.5m/m Hexagon screwdriver)	TE = max.	○
4	ALPC-Readjust	APC	TP. HF	VR991	HF = 2.0 V	○
5	SL OFF SET	Reset	J206 Pin 3	VR200	Signal level = 0	X
6	FS ACT OFFSET (COARSE)	Reset	J206 Pin 5	VR102	Signal level = 0.1 V	X
7	TS ACT OFFSET (COARSE)	AFC	TP, HF	VR152	HF = max. and clearest	○
8	TS GAIN (FINE)	FS	F1, F2, (Gain adjustment apparatus)	VR101	Vp-p (F1) = Vp-p (F2)	○
9	TS OFFSET (COARSE)	AFC	J206 Pin 1	VR150	Center of TE = 0 V	X
10-(A)	TS GAIN	AFC TS, SL	TP, HF TP, HF	VR151 VR151	Fig. 20 Fig. 21	○
10-(B)	TS GAIN (FINE)	TS, SL	T1, T2 (Gain adjustment apparatus)	VR151	Vp-p (T1) = Vp-p (T2)	○
11	TS ACT OFFSET (FINE)	APC	TP, HF	VR152	HF = max. and clearest	○
12	FS OFFSET	APC	TP, HF	VR100	HF = max.	○
13	AFC	TS, SL	J601 Pin 4 TP.HF/TP.PLCK	VR401 VR401	7,350 ± 8 Hz Synchronized each other	○
14	APC	APC	J201 Pin 2	VR402	Ripple ≦ 0.1Vp-p voltage	○
15	TS OFFSET (FINE)	Out of test mode	J206 Pin 1 (TE)	VR150	$V_A = V_B$	○

* ○ . . . . . Test Disc is used.
X . . . . . Test Disc is not used.

GAIN ADJUSTMENT APPARATUS

Note: Use DC output (+5V, –5V) of the player DP-45P as a power supply.

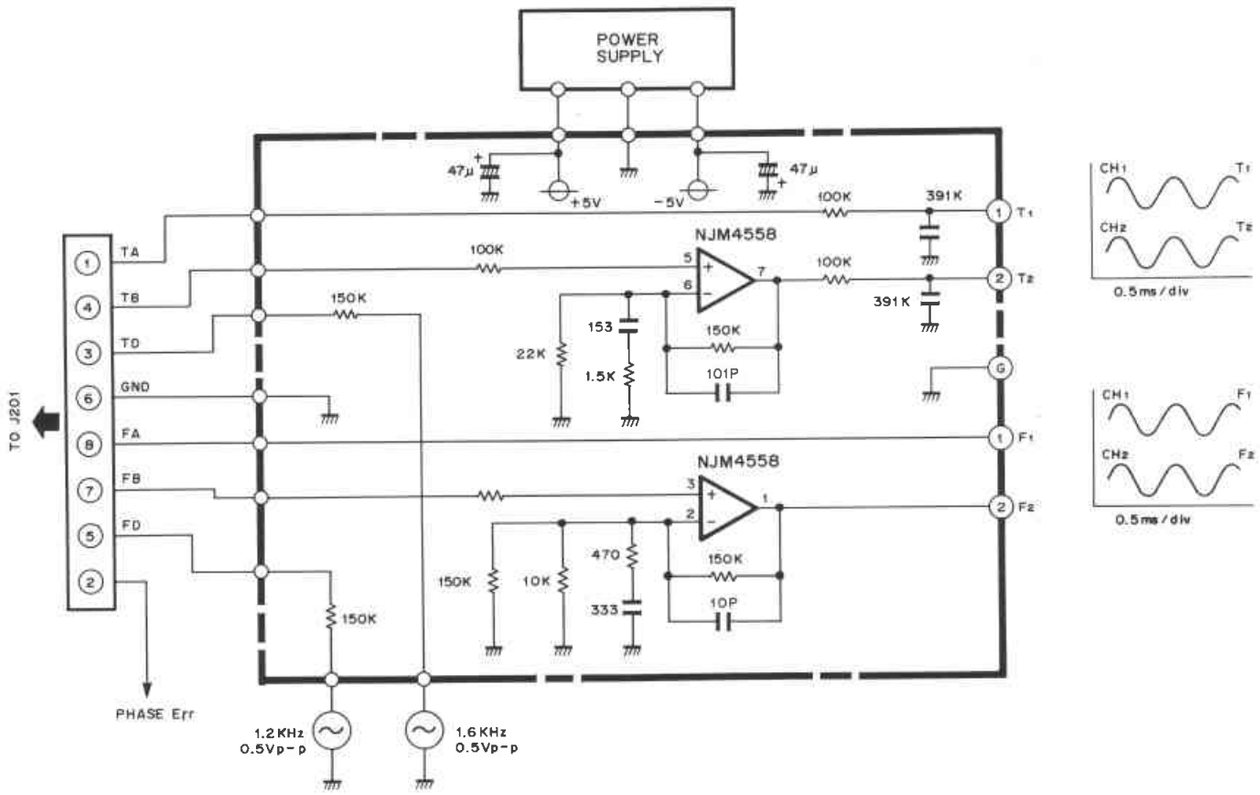

Fig. 28

TROUBLESHOOTING

No.	SYMPTOM	CONFIRMATION	CAUSE	CHECK
1	**Does not operate.**	When the power is not output. (1) ± 12V abormal	Central controller power Supply faulty.	Check whether or not the voltage is output to WA89-"4" (+12V) and WA89-"5" (−12V).
		(2) ± 5V abnormal	3-terminal regulator faulty	Check the outputs of IC802 (μPC7805) (+5V) and IC801 (μPC7905) (−5V). 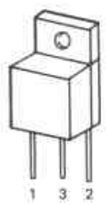 1. INPUT 2. OUTPUT 3. GND
		When smoke is generated	IC100 (STK6932) faulty	Check whether or not IC100 pins 15 and 16 are short-circuited using a tester. W178, R295 (1/W, 10Ω) in the −12V system or R296 (1/4W, 10Ω) in the +12V system are burnt; replace them.
		When the disc motor turns with the power supplied	±12V pattern disconnected	(1) When it is normal, the disc motor turns counterclockwise for approx. 0.3 sec when power is supplied. (2) When the disc motor turns clockwise continuously → +12V disconnected (3) When the disc motor turns counterclockwise continuously → −12V disconnected
2	**Does not operate.**	When the power supply is normal	One-touch cable or WA39 disconnected	Check that the pulse is input to the microprocessor IC301 (M50740A) pin 8 (CK) and pin 16 (SD) from the central controller. ≪ The pulse is output approx. 2.5 sec after PLAY is ON. ≫ 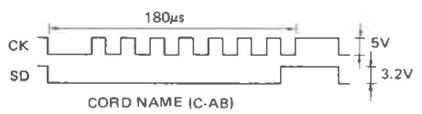 CORD NAME (C-AB)
			IC301 (microprocessor) fauly	Check that 4MHz oscillates at IC301 (M50740A) pin 23 (Xin).
				Check that the answer pulse is output to the central controller shown above. 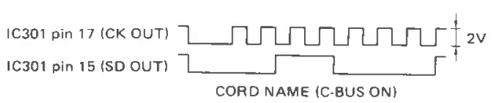 CORD NAME (C-BUS ON)
				≪ Reference≫ Play mode operation procedure Central controller • Power ON → CD player power ON (±12V, ±5V), Disc motor turns for 0.3 sec. • PLAY ON → The bus between the central controller and the player is checked after approx. 2.5 sec. → Pick-up lens rises 3 times after approx. 3.3 sec. → When the disc is detected at this time, the DISC SET lamp lights. → Simultaneously, the pick-up moves to the inner groove.

No.	SYMPTOM	CONFIRMATION	CAUSE	CHECK
3	**The tray does not open.**		PB-5 Open/close switch faulty	Check that IC301 pin 27 is set to ⌐└⌐
			Loading motor faulty	Check that +8V (OPEN) and −8V (CLOSE) are output to J203 pin 1 (LOAD)
			IC100 (STK6932) faulty	Check that WC13-3 (OPEN) is set to ⌐└⌐ and ((WA13-2 (CLOSE): ⌐└⌐
4	**The tray automatically opens and closes every few seconds.**	Check whether or not J203 has slipped off.	Mechanism switch cable disconnected.	Press the OPEN/CLOSE switches of the mechanism by hand to check whether or not the tray stops.
5	**When the power is set to ON, the slide moves.**		When it moves outward. −12V disconnected.	Check whether or not the voltage is present at IC100 (STK6932) pin 16 (−12V).
			IC200 faulty	(1) Check that IC200 (M51562P) pin 4 (SL) is set to 0V. (2) Check that IC200 pin 18 (TSA) is set to 0V.
6	**Focus is not drawn in**	When the lens cannot be moved up.	The actuator and leads of the pickup are disconnected.	Check that the output is present at J202 pin 7 (FS). 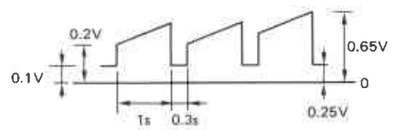
			IC100 (STK6932) faulty	Check that the waveform as shown in the diagram appears at IC200 (M51562P) pin 45 (FSB)
			IC200 faulty	Check that the waveform shown in the diagram appears at Q101-"C".
		The lens remains up.	−12V disconnected	Check the output of J206 pin 5 (FS) and J202 pin 7 (FS).
		The lens can be moved up.	Turntable is too high (too low)	(1) Check the height of the turntable (11 mm). (2) Press the disc by hand to check whether or not it is drawn in.
			Che disc does not keep in contact with the turntable.	Check rattling of the disc clamper.
			Focus servo VR adjustment faulty	Check that VR100 (FS OFFSET), VR101 (FS GAIN) and VR102 (FS ACT OFFSET) are positioned at their centers. ((Note: Measure J206-5 (FS) and adjust VR102 so that it is set to 0.1V stop.))
			IC200-42 $\overline{\text{HF OK}}$ detection faulty	Check that ⌐└⌐ appears when the lens is moved up/down by WD13-3 ($\overline{\text{HFOK}}$).

No.	SYMPTOM	CONFIRMATION	CAUSE	CHECK
6	**Focus is not drawn in**	The lens can be moved up.	FZC detection faulty Q100	Check that ⌐└⌐ appears when the lens is moved up/down by WD13-2 (FZC).
			IC202 (TC40H74A) faulty	Check that IC202 pin $\overline{(Q)}$ is set to ⌐└⌐ .
			J202 pin 4 (A+C) disconnected. J202 pin 5 (B+D) disconnected.	Check that the specified error signal is output to IC202 pin 32 (FE). (1) 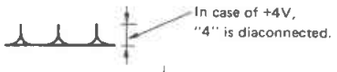 In case of +4V, "4" is diaconnected. (2) 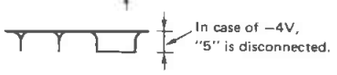 In case of −4V, "5" is disconnected.
			Pickup faulty	Check the lens rising speed of the pickup.
7	**The slide moves when the track is set to ON.**		Pickup cable disconnected J202 pin 2(F) disconnected.	Observe IC206 pin 1 (TE) 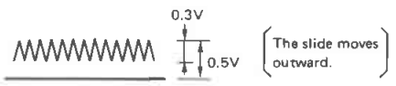 0.3V, 0.5V, The slide moves outward.
			J206 pin 6(E) disconnected	Observe IC206 pin 1 (TE) 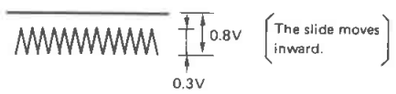 0.8V, 0.3V, The slide moves inward.
8	**Error-stops shortly after the unit start playing**	When the amplitude of the HF signal is gradually getting smaller.	Slide operation faulty	Measure the output of J206 pin 4 (SL). 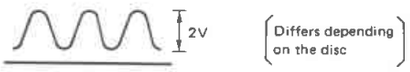 2V, Differs depending on the disc
9	**The disc turns in reverse when the AFC is set to ON.**		WA45-1 disconnected	When the disc turns forward for 0.5 sec and then turns in reverse, observe WA45-1 to check the pulse is output.
10	**Brake does not work during stop.**	When the disc does not stop within 2 sec after pressing the STP button	Q402 (2SD330) faulty	Check that approx. +10V is output to IC406 (NJM4558D) pin 1. (For 0.3 ~ 0.4 sec)
			+12V disconnected	When approx. +10V is not output to IC406 pin 1, check that the voltage is present at IC402 pin 8 (+12V).
			WA34-1 (STOP) disconnected	Check that the waveform ⌐└ appears to IC403 (MB84066BP) pin 6. (0.3 ~ 0.4 sec.)
			$\overline{DSS}$ detection operation faulty	Check that the waveform ⌐└ appears to IC401 (TC40H004P) pin 8 in the stop mode. (1) When it is not, readjust AFC (VR401). (2) Replace R415 to 27kΩ from 22kΩ.
11	**7.35kHz cannot be adjusted in the AFC adjustment.**	When HF and PLCK can be synchronized with VR401 (AFC) turned counterclockwise.	IC401 characteristics faulty.	Replace R401 to 820Ω from 680.

No.	SYMPTOM	CONFIRMATION	CAUSE	CHECK
12	**Error rate too high** **(Error rate should be less than 200Hz)** ■ **How to measure Error rate** • **Connect frequency counter at J601 pin3.** • **Push CD button.** • **Measure the frequency.**	When the jitter is too great with the HF signal monitored.	Inclination adjustment, pickup grating adjustment faulty.	Measure the HF test point and adjust it to the best point. 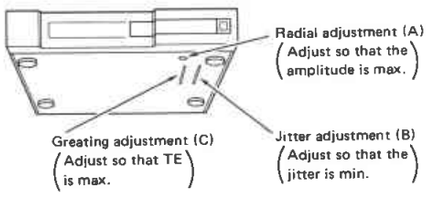 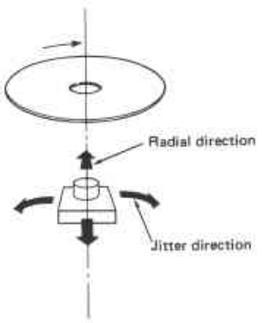
13	**No sound**	Error rate should be 200Hz or less • Regarding how to measure Error rate, refer to No. 12.	Soldering of IC601 (CX-7934) faulty	Check waveforms at IC701 (CX-20017) pin 6 (LATCH), pin 7 (LRCK), pin 8 (WCLK), pin 9 (BCLK) and pin 10 (DIN). 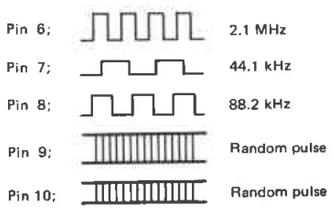
			Pattern disconnected	(1) Check that the waveform at IC301 pin 5 (MUTE) has the form ⌐ (2) Check that Q705, Q706 (2SK363GR) —G is set to +0.7V. 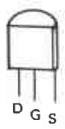

No.	SYMPTOM	CONFIRMATION	CAUSE	CHECK
13	**No sound**	Error rate should be 200Hz or less • Regarding how to measure Error rate, refer to No. 12.	IC701 (CX-20017) faulty	(1) Check that the crystal oscillation signal is output to IC701 pin 27. 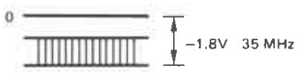 (2) Observe the waveforms at IC702 pin 7 (L) and IC703 pin 1 (R).

INTERNAL DIAGRAME AND PINOUT OF INTEGRATED CIRCUITS

IC100: STK6932

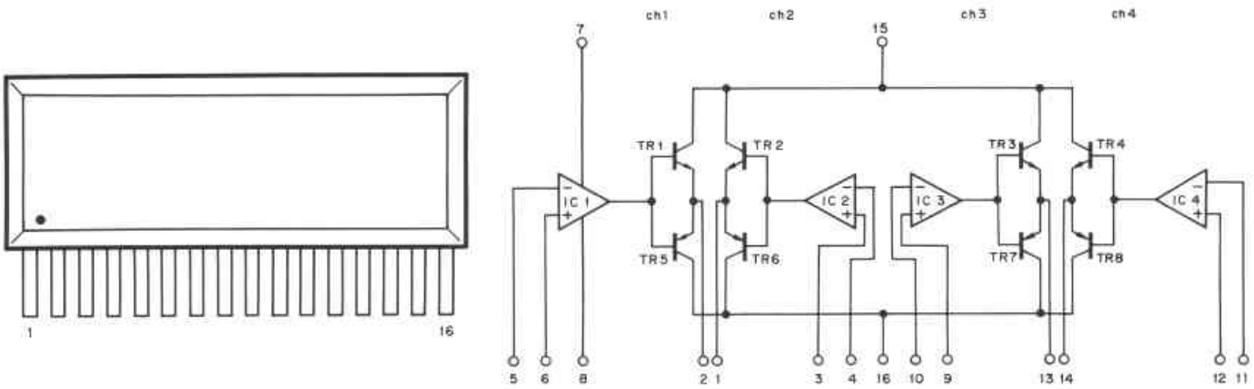

IC200: M51562P

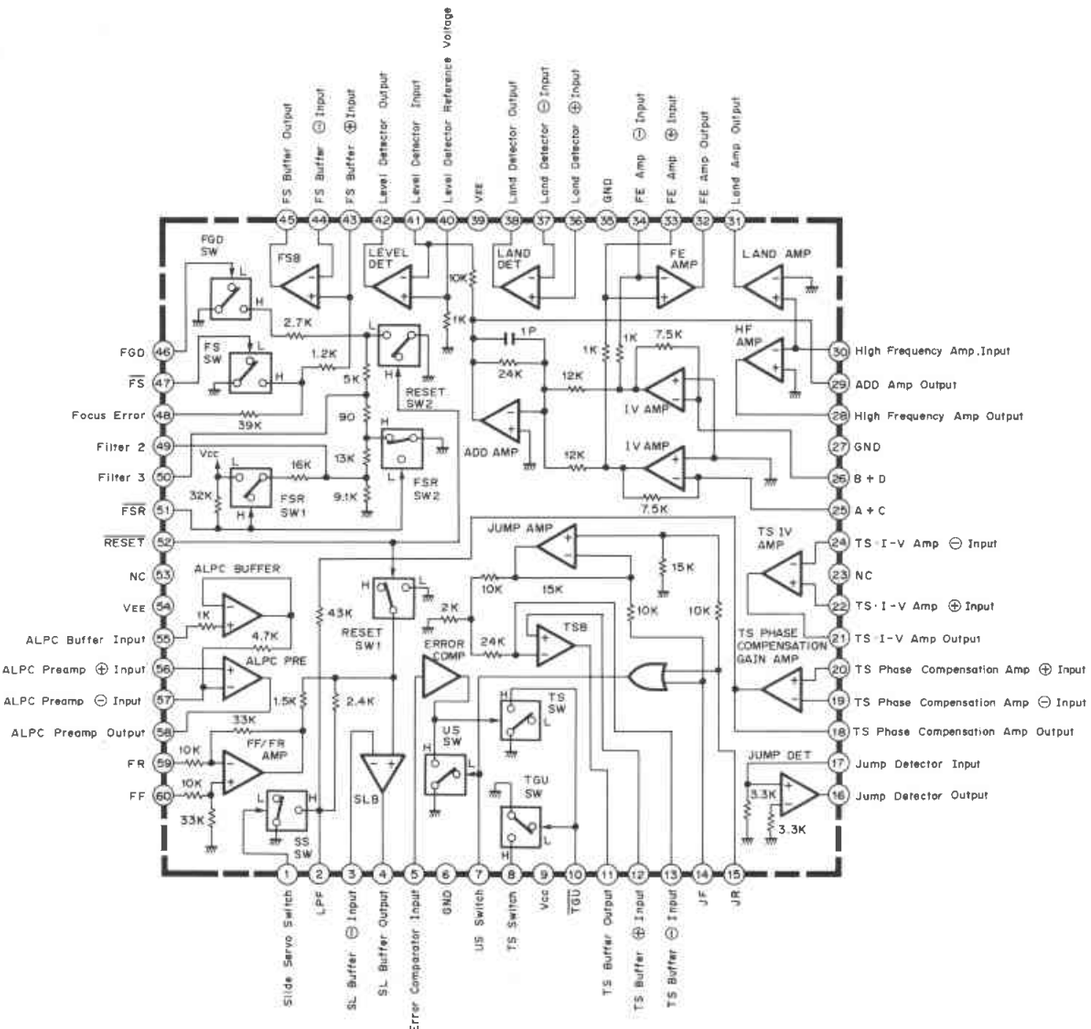

IC201: TC4011BP

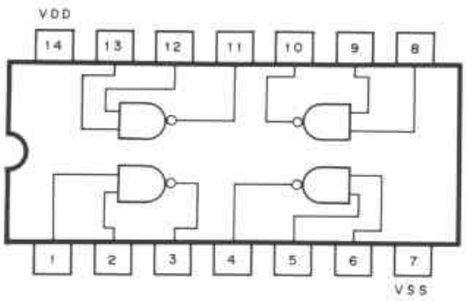

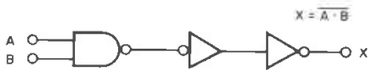

IC202: TC40H074P
IC504, IC505: MC74HC74

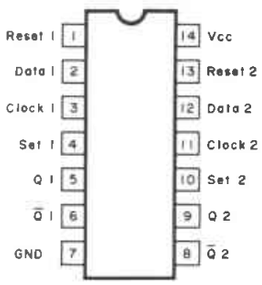

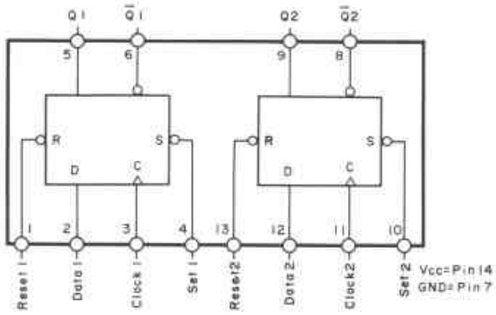

Inputs				Outputs	
Set	Reset	Clock	Data	Q	$\overline{Q}$
L	H	X	X	H	L
H	L	X	X	L	H
L	L	X	X	H	H
H	H	⌐	H	H	L
H	H	⌐	L	L	H
H	H	L	X	no change	
H	H	H	X	no change	
H	H	⌐	X	no change	

IC203: TC40H386P, TC4030BP

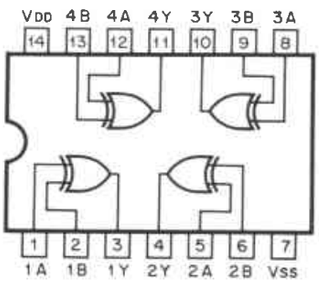

INPUTS		OUTPUT
A	B	Y
L	L	L
H	L	H
L	H	H
H	H	L

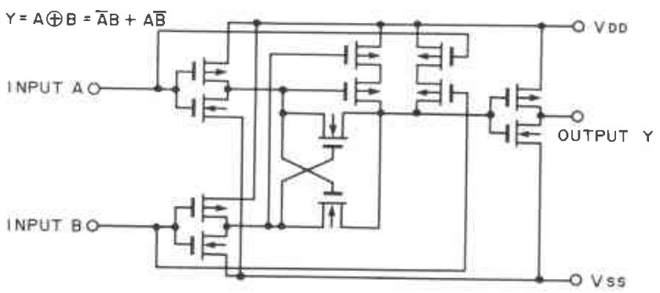

IC301: M50740A-401SP

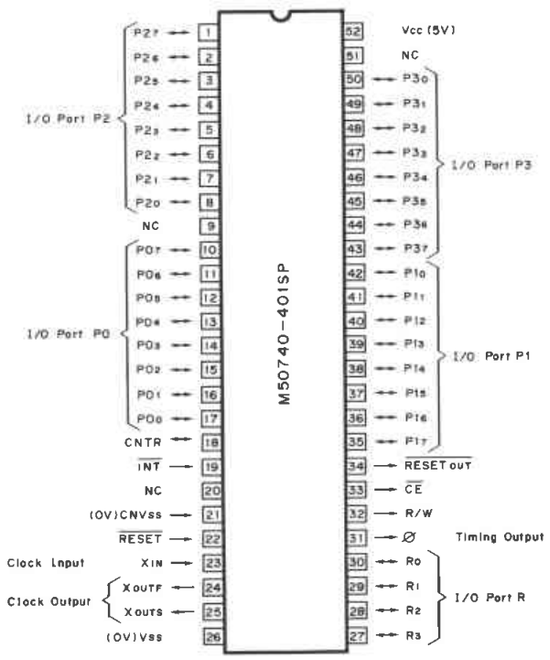

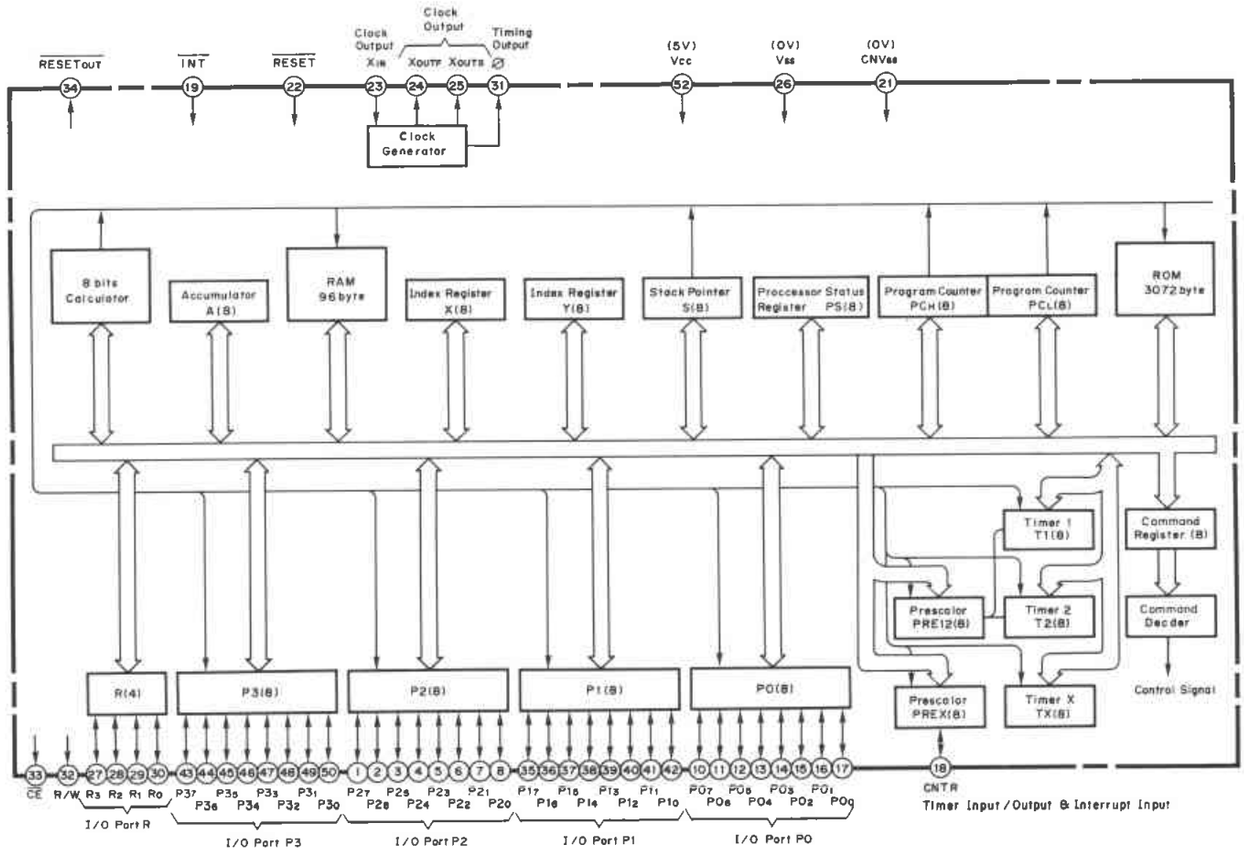

IC302: TC4069BP

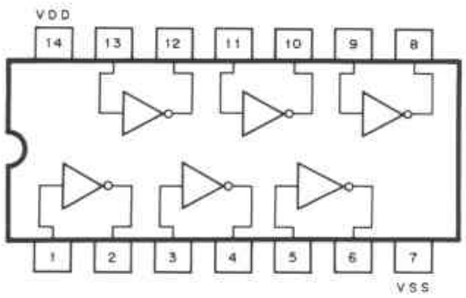

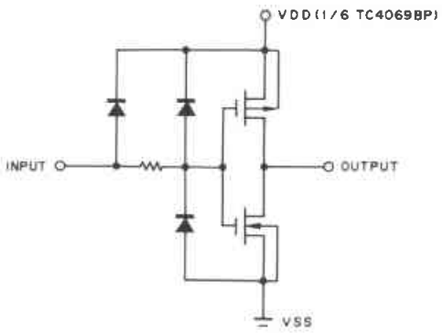

IC401, IC402, IC501, IC503: TC40H004P

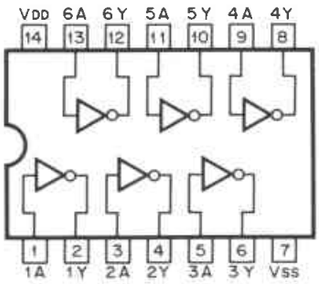

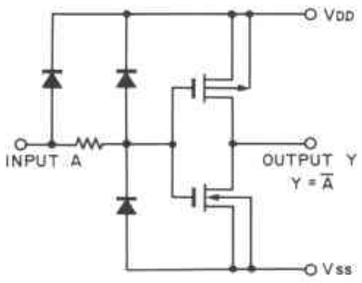

IC403: MB84066BP

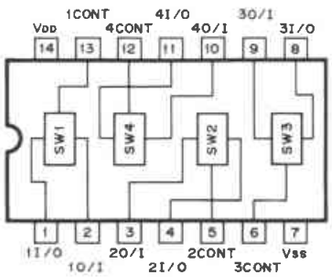

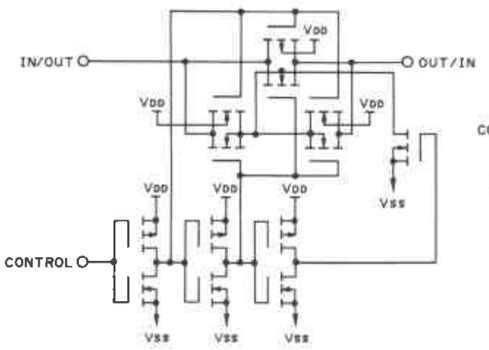

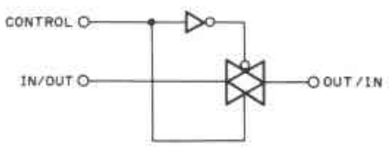

IC404: TC5081AP

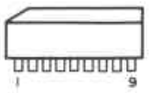

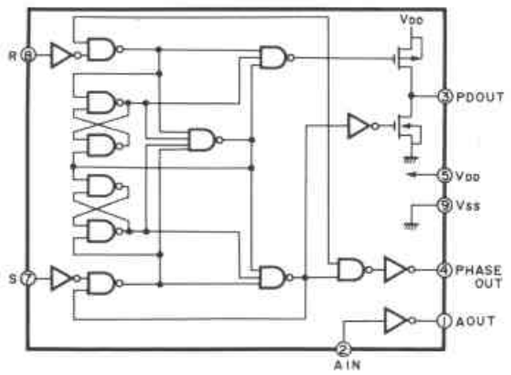

IC801, IC802: μPC7905

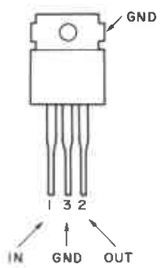

IC405: BA6301

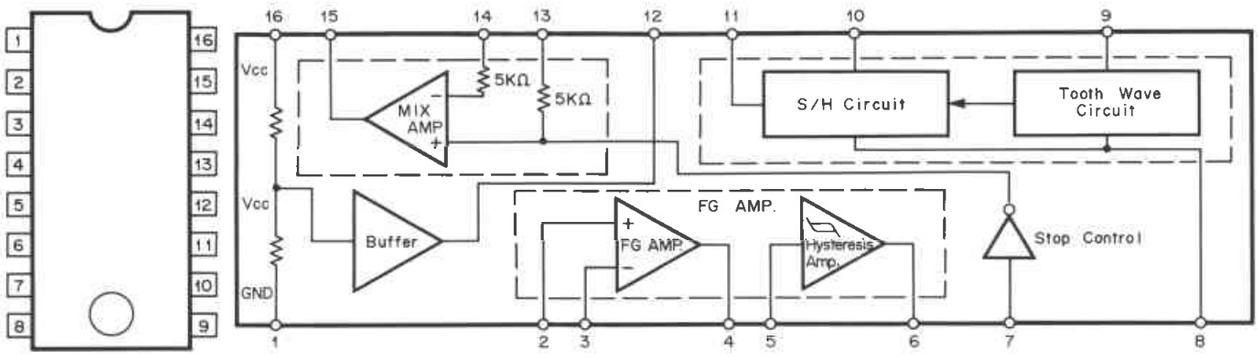

- **IC702, IC703: NJM082D**
- **IC406, IC705: NJM4558D**

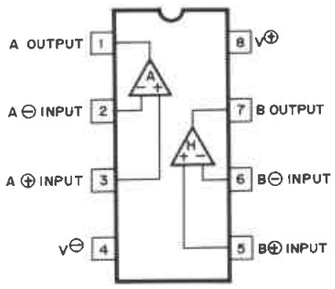

IC502: MC74HC86

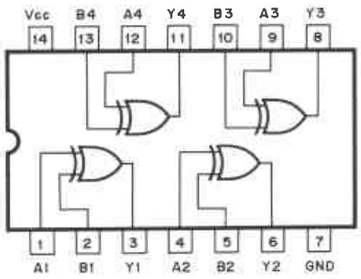

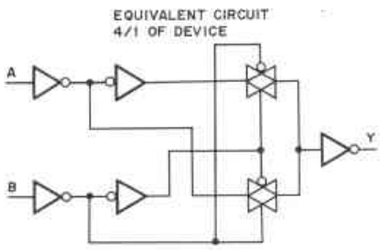

Inputs		Outputs
A	B	Y
L	L	L
L	H	H
H	L	H
H	H	L

$Y = A \oplus B = \bar{A}B + A\bar{B}$

IC602: M58725P

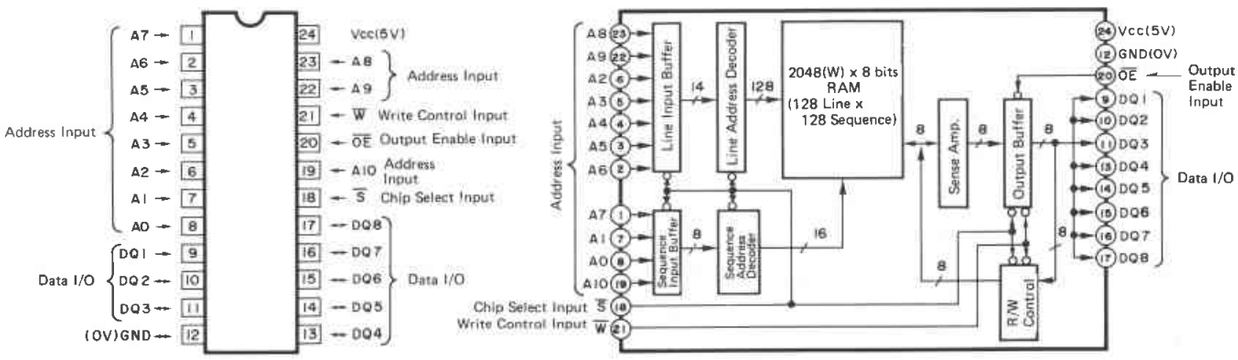

IC601: CX-7934

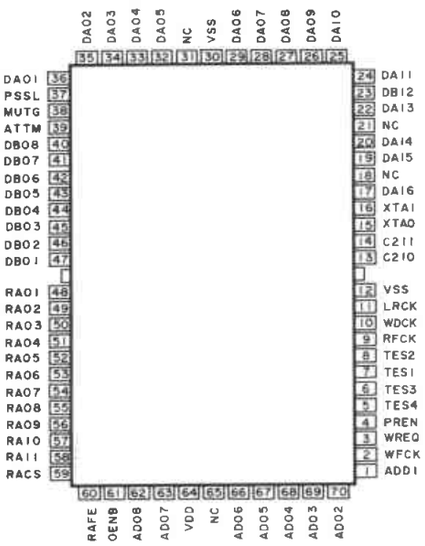

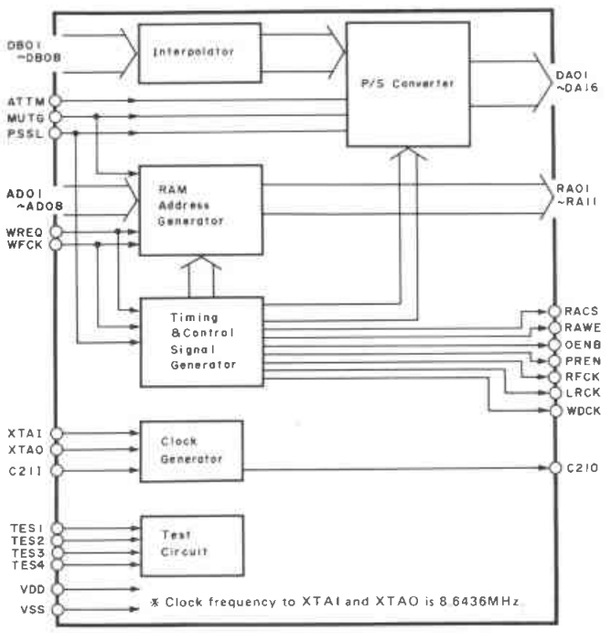

IC603: CX-7933

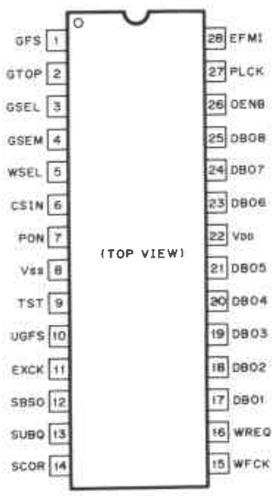

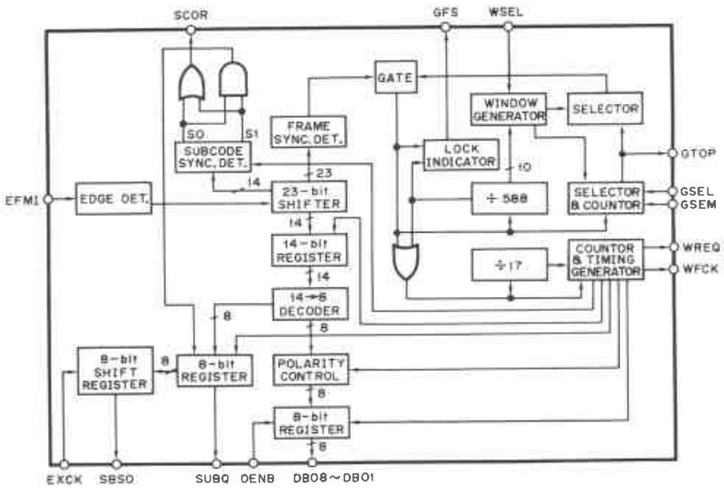

PIN NUMBER	PIN NAME	TYPE	FUNCTION	PIN NUMBER	PIN NAME	TYPE	FUNCTION
1	GFS	OUT	Lock indication	15	WFCK	OUT	Write frame clock
2	GTOP	OUT	Frame sync protection state indication	16	WREQ	OUT	Write request
3	GSEL	IN	Number of monitor frames selection L	17	DB01	OUT	Data 1 (LSB) (Tri-State)
4	GSEM	IN	Number of monitor frames selection M	18	DB02	OUT	Data 2 (Tri-State)
5	WSEL	IN	Window selection	19	DB03	OUT	Data 3 (Tri-State)
6	CSIN	IN	Not used in general. Fixed at Vss	20	DB04	OUT	Data 4 (Tri-State)
7	PON	IN	Not used in general. Fixed at Vss	21	DB05	OUT	Data 5 (Tri-State)
8	Vss	—		22	VDD	—	
9	TST	IN	Not used in general. Fixed at Vss	23	DB06	OUT	Data 6 (Tri-State)
10	UGFS	OUT	Not used in general. Always set open	24	DB07	OUT	Data 7 (Tri-State)
11	EXCK	IN	Subcode serial output clock	25	DB08	OUT	Data 8 (MSB) (Tri-State)
12	SBSO	OUT	Subcode serial output	26	OENB	IN	Data output enable (active low)
13	SUBQ	OUT	Subcode Q output	27	PLCK	IN	PLL-clock input
14	SCOR	OUT	Subcode Sync S0 + S1 output	28	EFMI	IN	EFM signal input

IC604: CX-7935

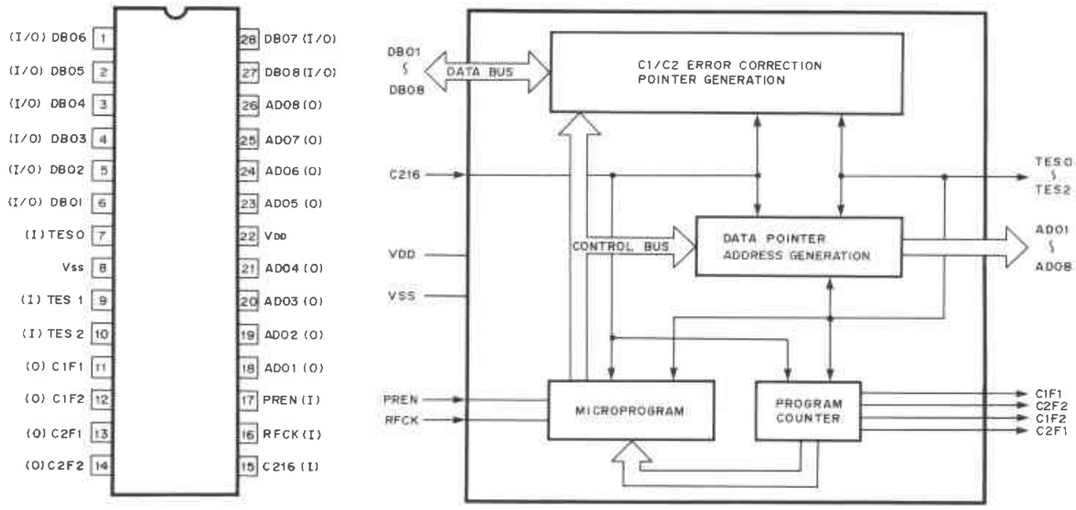

IC701: CX-20017

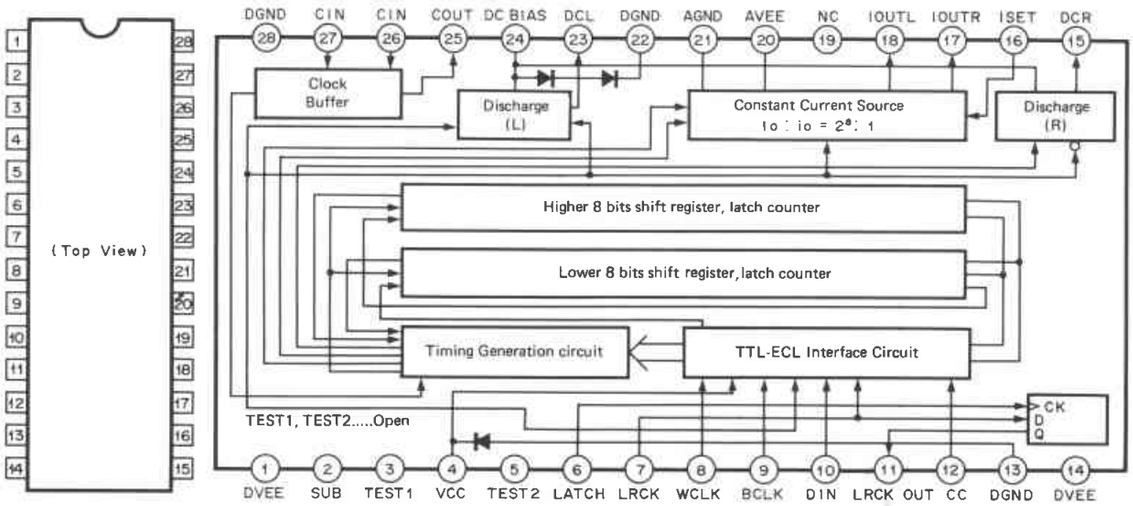

IC704: TC4053BP

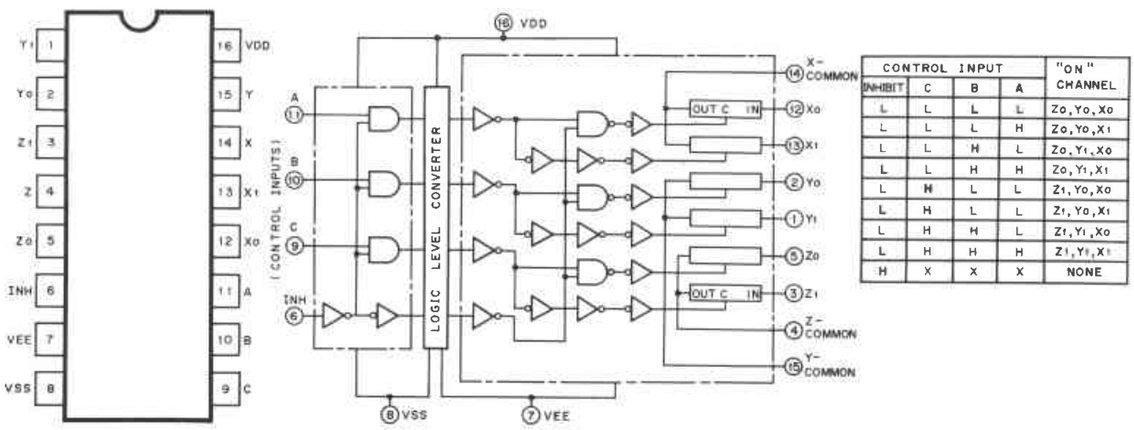

CONTROL INPUT				"ON" CHANNEL
INHIBIT	C	B	A	
L	L	L	L	Zo, Yo, Xo
L	L	L	H	Zo, Yo, X1
L	L	H	L	Zo, Y1, Xo
L	L	H	H	Zo, Y1, X1
L	H	L	L	Z1, Yo, Xo
L	H	L	H	Z1, Yo, X1
L	H	H	L	Z1, Y1, Xo
L	H	H	H	Z1, Y1, X1
H	X	X	X	NONE

BLOCK DIAGRAM

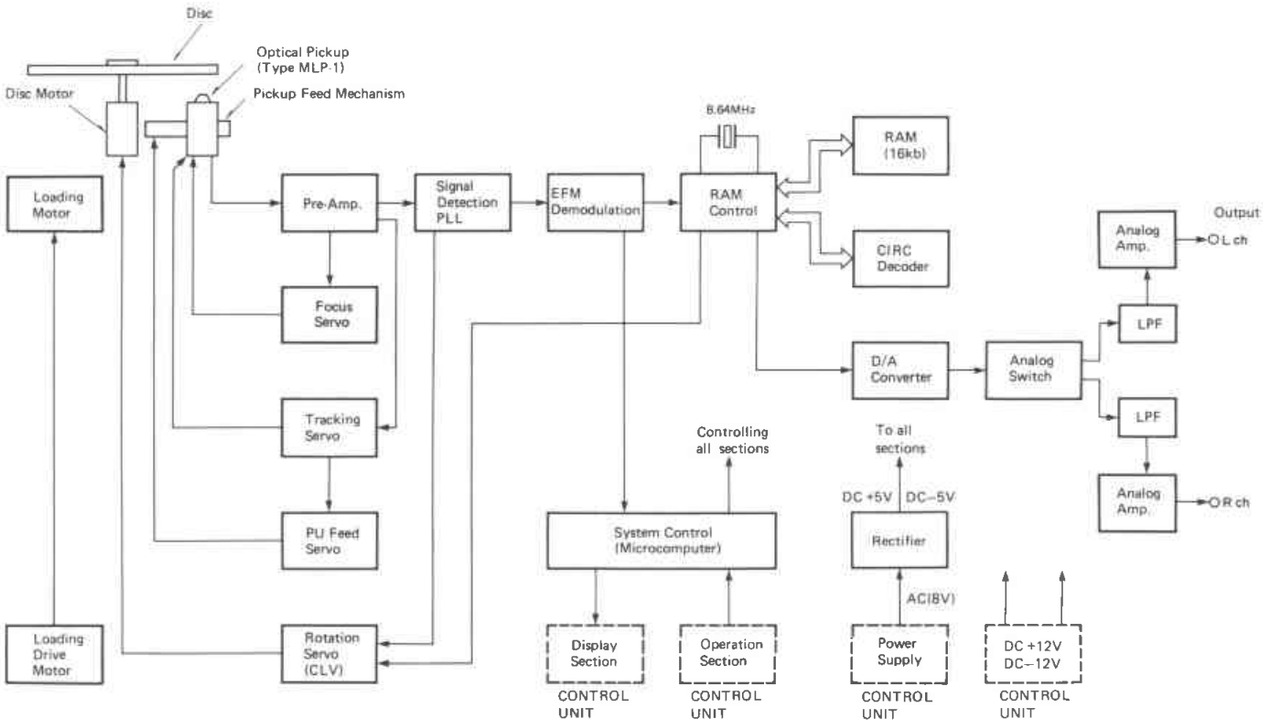

WIRING DIAGRAM

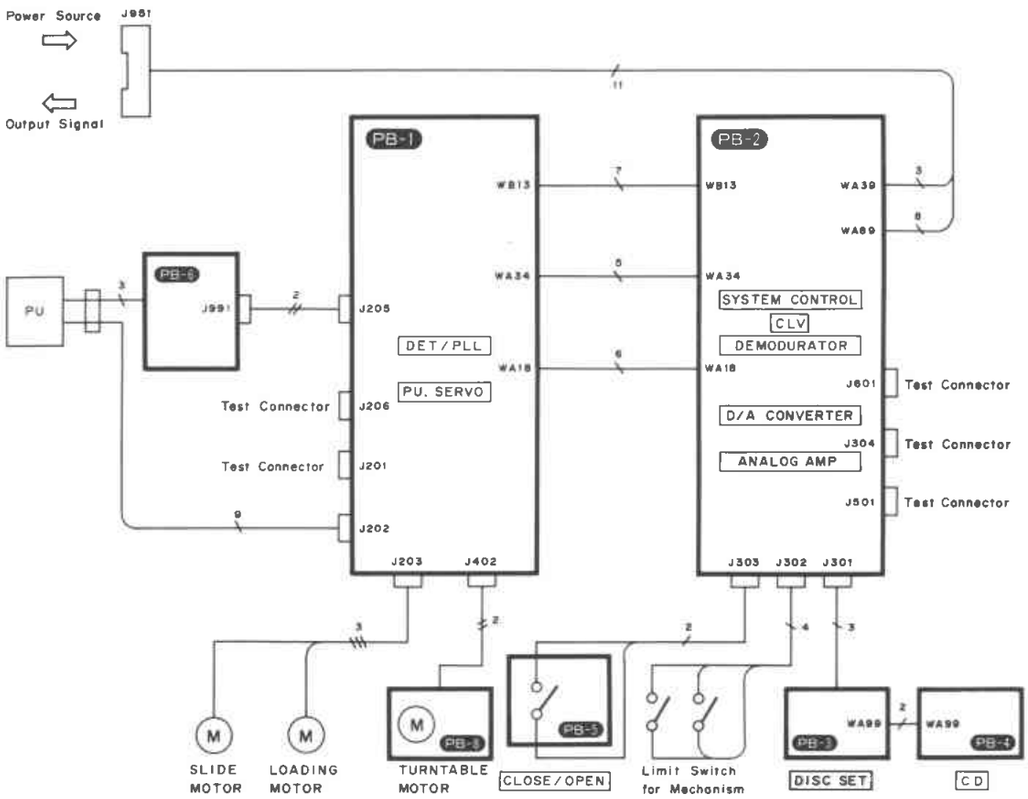

PRINTED CIRCUIT BOARD

PB-3

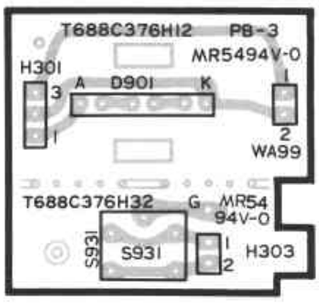

PB-4

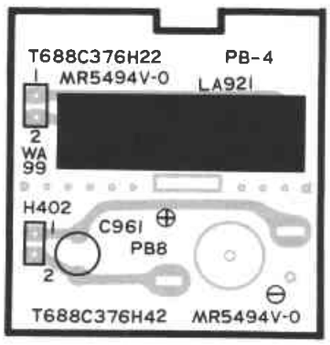

PB-6

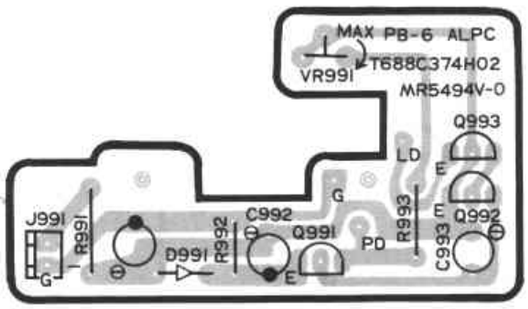

LOCATION TABLE PE

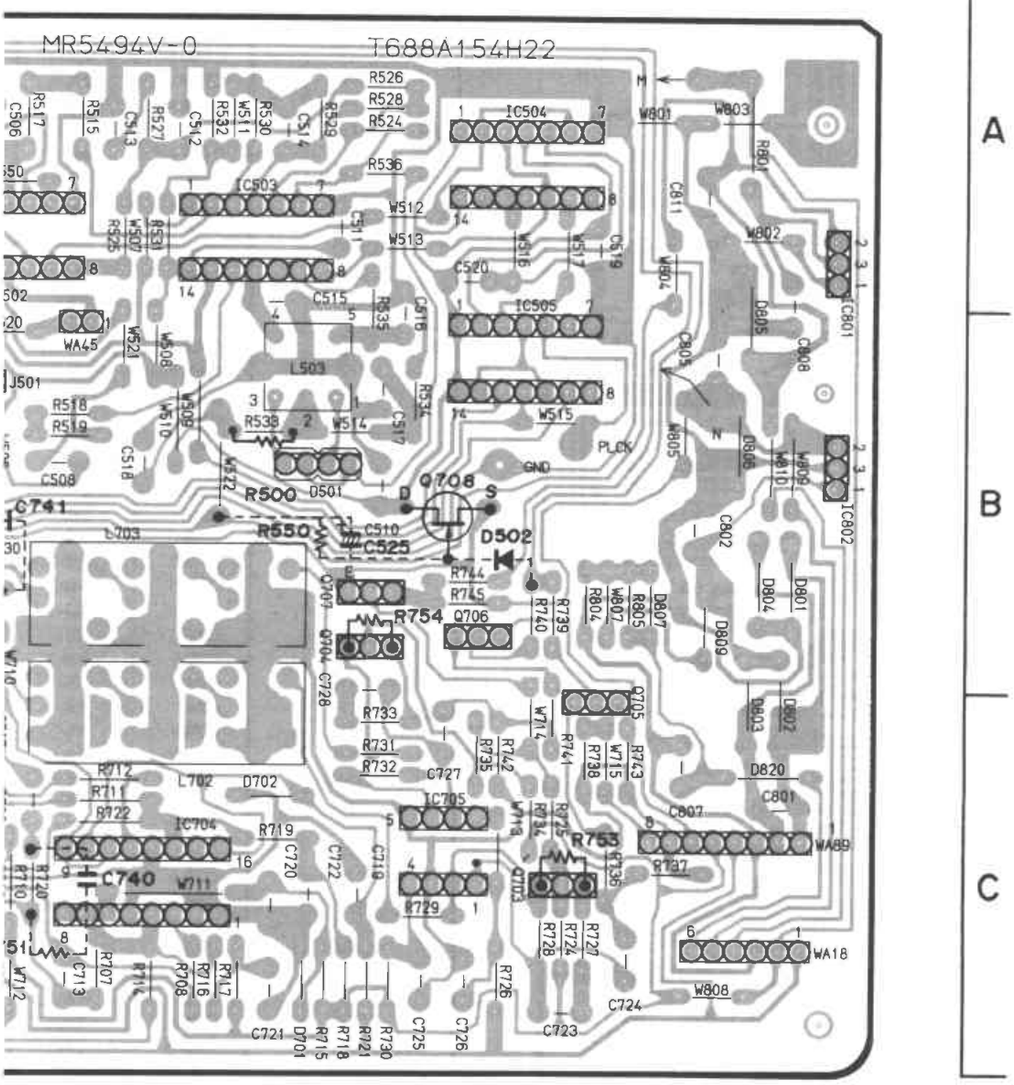

Symbol No.	Address
C301	5A
C302	5A
C303	4B
C304	4A
C305	6B
C310	6A
C501	4A
C502	3B
C503	4B
C504	3B
C505	3B
C506	3A
C507	3A
C508	3B
C510	2B
C511	2A
C512	3A
C513	3A
C514	2A
C515	2A
C516	2A
C517	2B
C518	3B
C519	1A
C520	2A
C521	4A
C522	3A
*C525	2B
C550	3A
C601	5C
C602	5C
C603	5B
C604	6C
C605	6B
C606	5C
C701	4C
C702	4C
C703	4B
C704	4C
C705	4C
C706	4C
C707	4C
C708	4C
C709	4C
C710	4B
C711	3C
C712	4C
C713	3C
C714	3C
C715	4C
C716	4B
C717	3C
C718	3C
C719	2C
C720	2C
C721	2C
C722	2C
C723	2C
C724	1C
C725	2C

PB-2

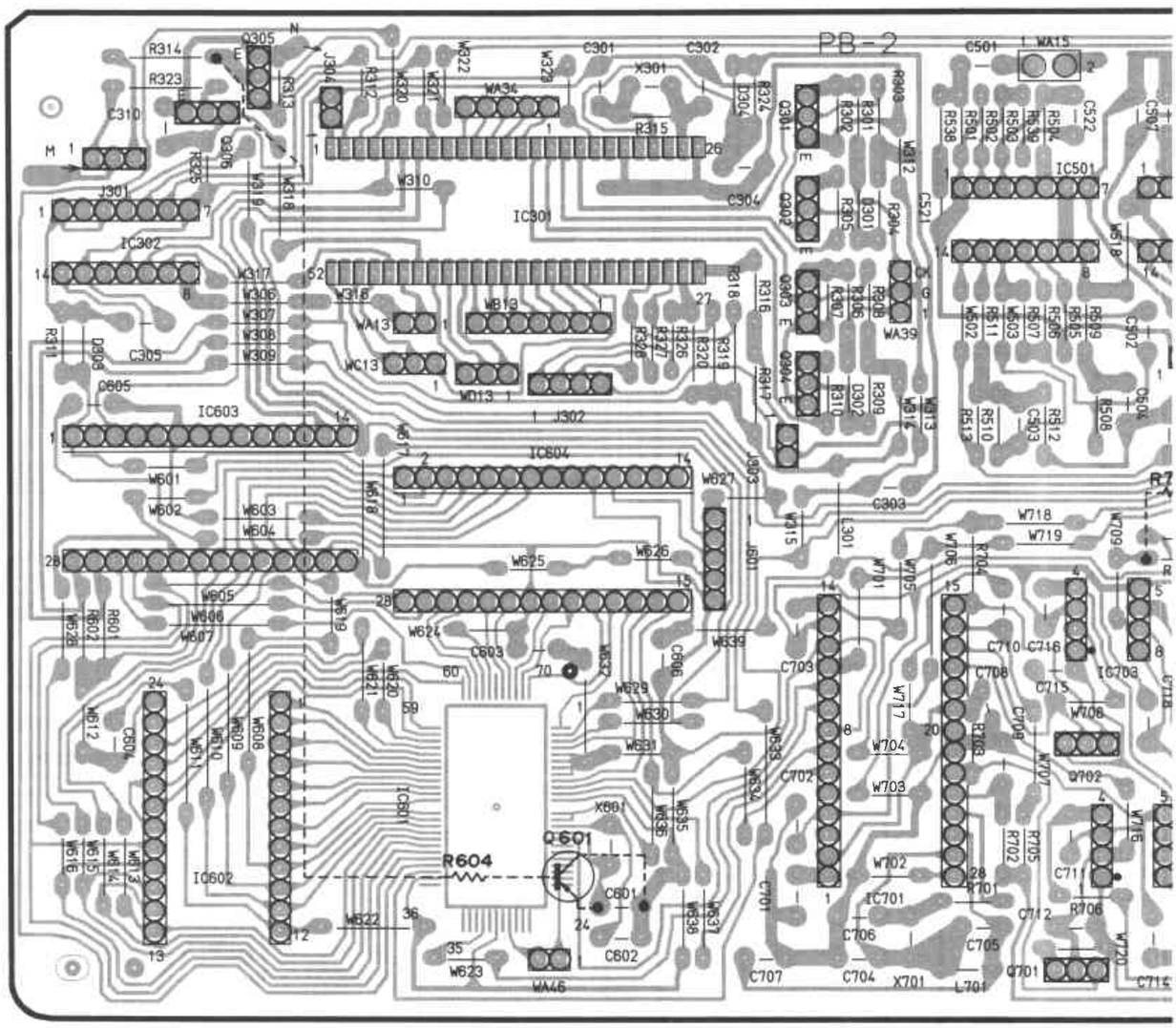
PB-2
R604
Q601
IC601
IC602
IC603
IC604
IC301
IC302
IC501
IC701
IC703
X301
X601
X701
L301
L701
J301
J302
J303
J304
C301
C302
C303
C304
C305
C306
C501
C601
C602
C701
C702
C703
C704
C705
C706
C707
C708
C709
C710
C711
C712
C713
C714
C715
C716
C717
C718
C721
C522
WA15
WA36
WA39
WA46
WB13
WC13
WD13

* This part is placed on the patern side.

Symbol No.	Address
C413	6B
C414	6B
C415	6C
C416	6C
C417	6C
C418	5C
C419	5C
*C420	6C
C421	6C
C422	5C
*C499	5C
D100	3A
D102	2B
D151	2A
D200	1A
D202	3B
D203	3B
D206	3B
* D207	1C
D401	6B
D402	6B
D403	5B
IC100	1C
IC200	3B
IC201	1A
IC202	1B
IC203	1B
IC401	6B
IC402	5B
IC403	5C
IC404	6C
IC405	6C
IC406	5C
L201	4B
Q100	4A
Q101	2B
Q102	3B
Q103	2C
Q150	5C
Q151	5C
Q152	3C
Q199	2C
Q200	3A
Q201	3A
Q246	2C
Q247	2B
Q248	2B
Q249	2B
Q401	6A
Q402	6C
Q403	6C
R100	4A
R101	4A
R102	4A
R103	2B
R105	2B
R106	2B

Symbol No.	Address
R107	2B
R108	2B
R109	2A
R110	2B
R111	2B
R112	2B
R113	3B
R114	1C
R115	1C
R116	1C
R117	3A
R118	2B
R119	3B
R120	3B
R121	2B
R122	4C
R123	4C
R125	2C
R150	4B
R151	5B
R153	4B
R154	4B
R155	4B
R156	4B
R157	4C
R158	4C
R159	4C
R160	4C
R161	4C
R162	5C
R163	4C
R164	3C
R165	3C
R166	3C
R167	3C
R168	3C
R169	3C
R173	4C
R174	4C
R177	3C
R178	2C
R182	2C
R183	1C
R184	1C
R199	2C
R200	2C
R201	2C
R202	2C
R203	2C
R204	2C
R205	1C
R206	2C
R207	1B
R208	1B
R209	1B
R210	3A
R211	3A
R212	3A
R213	1C
R214	3A

Symbol No.	Address
R215	4A
R217	1B
R218	2A
R219	2A
R220	4C
R221	5A
R230	2A
*R233	2A
*R234	3B
R242	2C
R243	2C
R244	2B
R245	2C
R246	4B
R247	4B
R248	4B
R249	3A
R250	4B
R251	3B
R252	1C
R253	1C
R254	1C
R255	2C
R256	2C
R257	2C
R259	2C
R260	2C
*R295	1C
*R297	1C
R401	6B
R402	6B
R403	6B
R404	6B
R405	6B
R406	6C
*R407	6B
R408	6B
R409	6B
R410	6B
R411	6B
R412	6B
R413	6B
R414	5B
R415	5B
R416	6B
R417	5B
R418	5B
R419	5B
R420	6B
R421	6B
R422	6B
R423	6B
R424	5B
R425	5A
R426	5B
R427	5B
R428	5B
R429	5B
R430	5B
R431	5B

Symbol No.	Address
R432	5B
R433	5B
R434	5B
R435	5B
R436	5B
R438	5C
R439	5C
R440	5B
R441	6B
R442	6B
R443	6B
R444	6B
R445	6B
R446	6C
R447	6C
R448	6C
R449	6C
R450	6C
R453	5C
R454	5C
R455	5B
R456	5B
R457	5B
R458	5C
R459	5C
R460	5C
VR100	2B
VR101	3B
VR102	2B
VR150	4C
VR151	4B
VR152	3C
VR200	1C
VR401	6B
VR402	6C

LOCATION TABLE

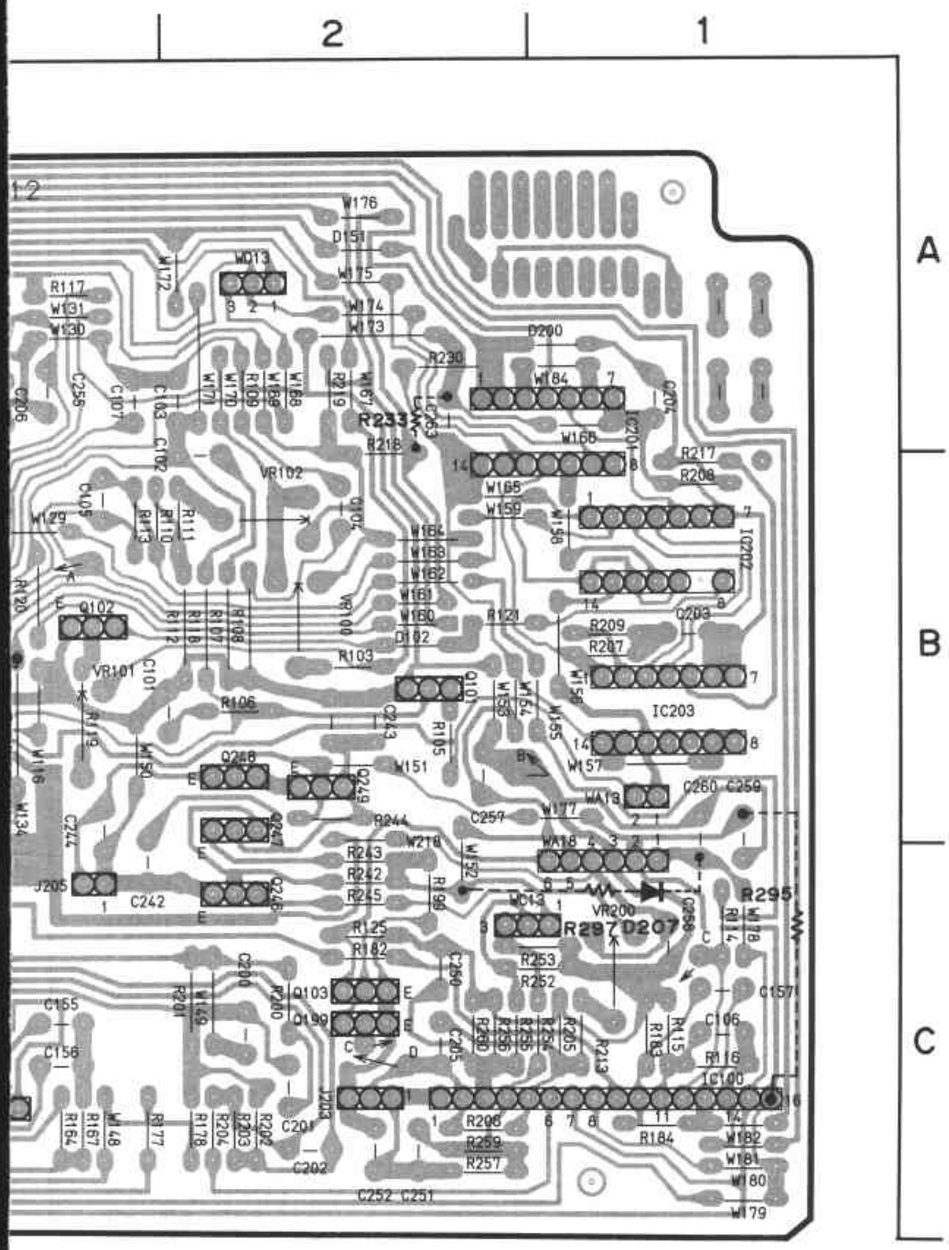

Symbol No.	Address
C100	3A
C101	2B
C102	2A
C103	2A
C104	2B
C105	3B
C106	1C
C107	3A
C108	4C
C150	4B
C151	4B
C152	4C
C153	4C
C154	4C
C155	3C
C156	3C
C157	1C
C160	4B
C200	2C
C201	2C
C202	2C
C203	1B
C204	1A
C205	2C
C206	3A
C207	3B
C208	3B
C209	4B
C210	4B
C242	3C
C243	2B
C244	3B
C246	4B
C247	4B
C248	4B
C249	3A
C250	2C
C251	2C
C252	2C
C253	4C
C254	4C
C255	3A
C256	3B
C257	2B
C258	1C
C259	1B
C260	1B
C263	2A
C269	4B
C270	4B
C401	6B
C402	6A
C403	6B
C404	6B
C405	6B
C406	6B
C407	5B
C408	5B
C409	5B
C412	6B

1

* This part is placed on the patern side.

Symbol No.	Address
C413	6B
C414	6B
C415	6C
C416	6C
C417	6C
C418	5C
C419	5C
*C420	6C
C421	6C
C422	5C
*C499	5C
D100	3A
D102	2B
D151	2A
D200	1A
D202	3B
D203	3B
D206	3B
*D207	1C
D401	6B
D402	6B
D403	5B
IC100	1C
IC200	3B
IC201	1A
IC202	1B
IC203	1B
IC401	6B
IC402	5B
IC403	5C
IC404	6C
IC405	6C
IC406	5C
L201	4B
Q100	4A
Q101	2B
Q102	3B
Q103	2C
Q150	5C
Q151	5C
Q152	3C
Q199	2C
Q200	3A
Q201	3A
Q246	2C
Q247	2B
Q248	2B
Q249	2B
Q401	6A
Q402	6C
Q403	6C
R100	4A
R101	4A
R102	4A
R103	2B
R105	2B
R106	2B

Symbol No.	Address
R107	2B
R108	2B
R109	2A
R110	2B
R111	2B
R112	2B
R113	3B
R114	1C
R115	1C
R116	1C
R117	3A
R118	2B
R119	3B
R120	3B
R121	2B
R122	4C
R123	4C
R125	2C
R150	4B
R151	5B
R153	4B
R154	4B
R155	4B
R156	4B
R157	4C
R158	4C
R159	4C
R160	4C
R161	4C
R162	5C
R163	4C
R164	3C
R165	3C
R166	3C
R167	3C
R168	3C
R169	3C
R173	4C
R174	4C
R177	3C
R178	2C
R182	2C
R183	1C
R184	1C
R199	2C
R200	2C
R201	2C
R202	2C
R203	2C
R204	2C
R205	1C
R206	2C
R207	1B
R208	1B
R209	1B
R210	3A
R211	3A
R212	3A
R213	1C
R214	3A

Symbol No.	Address
R215	4A
R217	1B
R218	2A
R219	2A
R220	4C
R221	5A
R230	2A
*R233	2A
*R234	3B
R242	2C
R243	2C
R244	2B
R245	2C
R246	4B
R247	4B
R248	4B
R249	3A
R250	4B
R251	3B
R252	1C
R253	1C
R254	1C
R255	2C
R256	2C
R257	2C
R259	2C
R260	2C
*R295	1C
*R297	1C
R401	6B
R402	6B
R403	6B
R404	6B
R405	6B
R406	6C
*R407	6B
R408	6B
R409	6B
R410	6B
R411	6B
R412	6B
R413	6B
R414	5B
R415	5B
R416	6B
R417	5B
R418	5B
R419	5B
R420	6B
R421	6B
R422	6B
R423	6B
R424	5B
R425	5A
R426	5B
R427	5B
R428	5B
R429	5B
R430	5B
R431	5B

Symbol No.	Address
R432	5B
R433	5B
R434	5B
R435	5B
R436	5B
R438	5C
R439	5C
R440	5B
R441	6B
R442	6B
R443	6B
R444	6B
R445	6B
R446	6C
R447	6C
R448	6C
R449	6C
R450	6C
R453	5C
R454	5C
R455	5B
R456	5B
R457	5B
R458	5C
R459	5C
R460	5C
VR100	2B
VR101	3B
VR102	2B
VR150	4C
VR151	4B
VR152	3C
VR200	1C
VR401	6B
VR402	6C

LOCATION TABLE

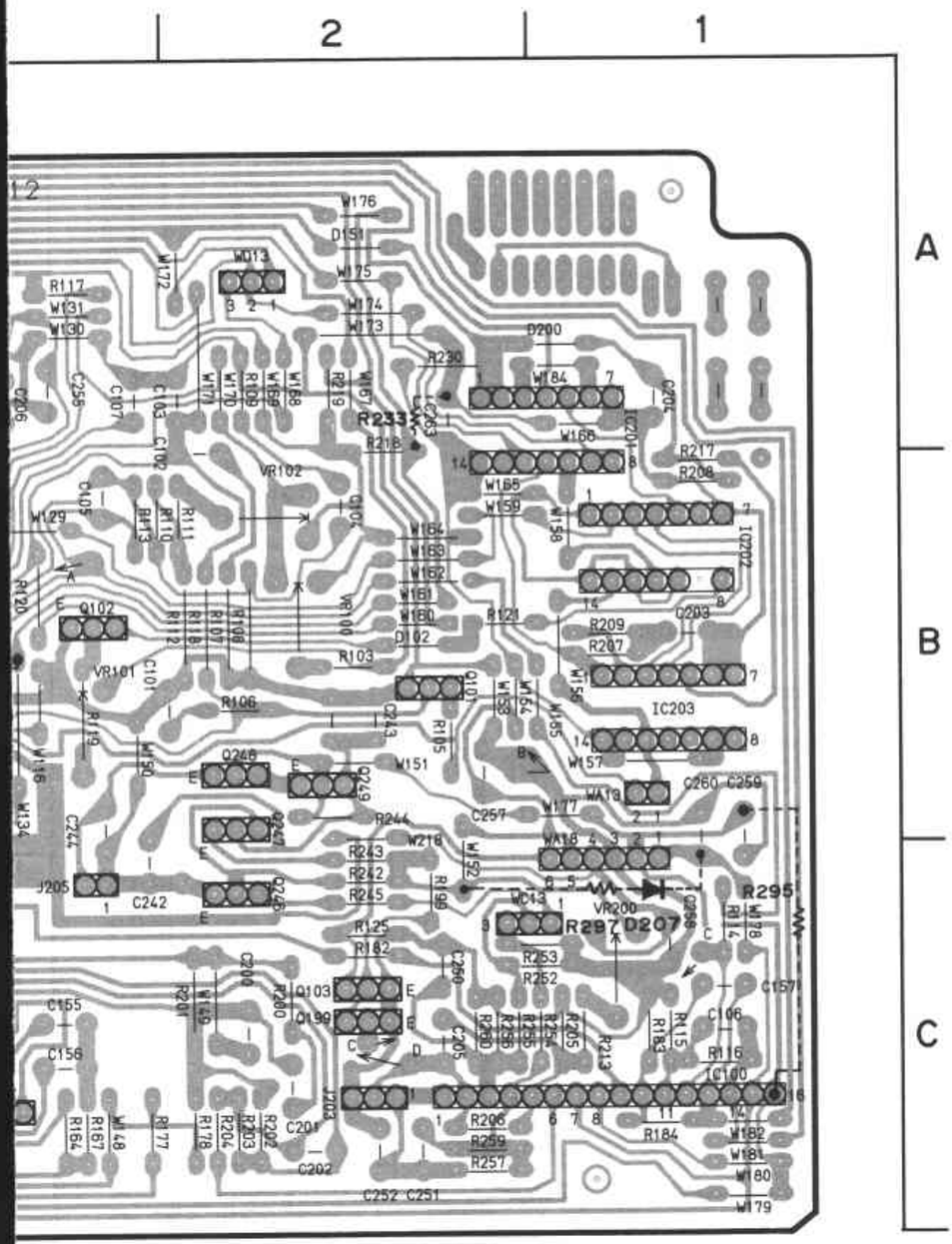

Symbol No.	Address
C100	3A
C101	2B
C102	2A
C103	2A
C104	2B
C105	3B
C106	1C
C107	3A
C108	4C
C150	4B
C151	4B
C152	4C
C153	4C
C154	4C
C155	3C
C156	3C
C157	1C
C160	4B
C200	2C
C201	2C
C202	2C
C203	1B
C204	1A
C205	2C
C206	3A
C207	3B
C208	3B
C209	4B
C210	4B
C242	3C
C243	2B
C244	3B
C246	4B
C247	4B
C248	4B
C249	3A
C250	2C
C251	2C
C252	2C
C253	4C
C254	4C
C255	3A
C256	3B
C257	2B
C258	1C
C259	1B
C260	1B
C263	2A
C269	4B
C270	4B
C401	6B
C402	6A
C403	6B
C404	6B
C405	6B
C406	6B
C407	5B
C408	5B
C409	5B
C412	6B

PB-1

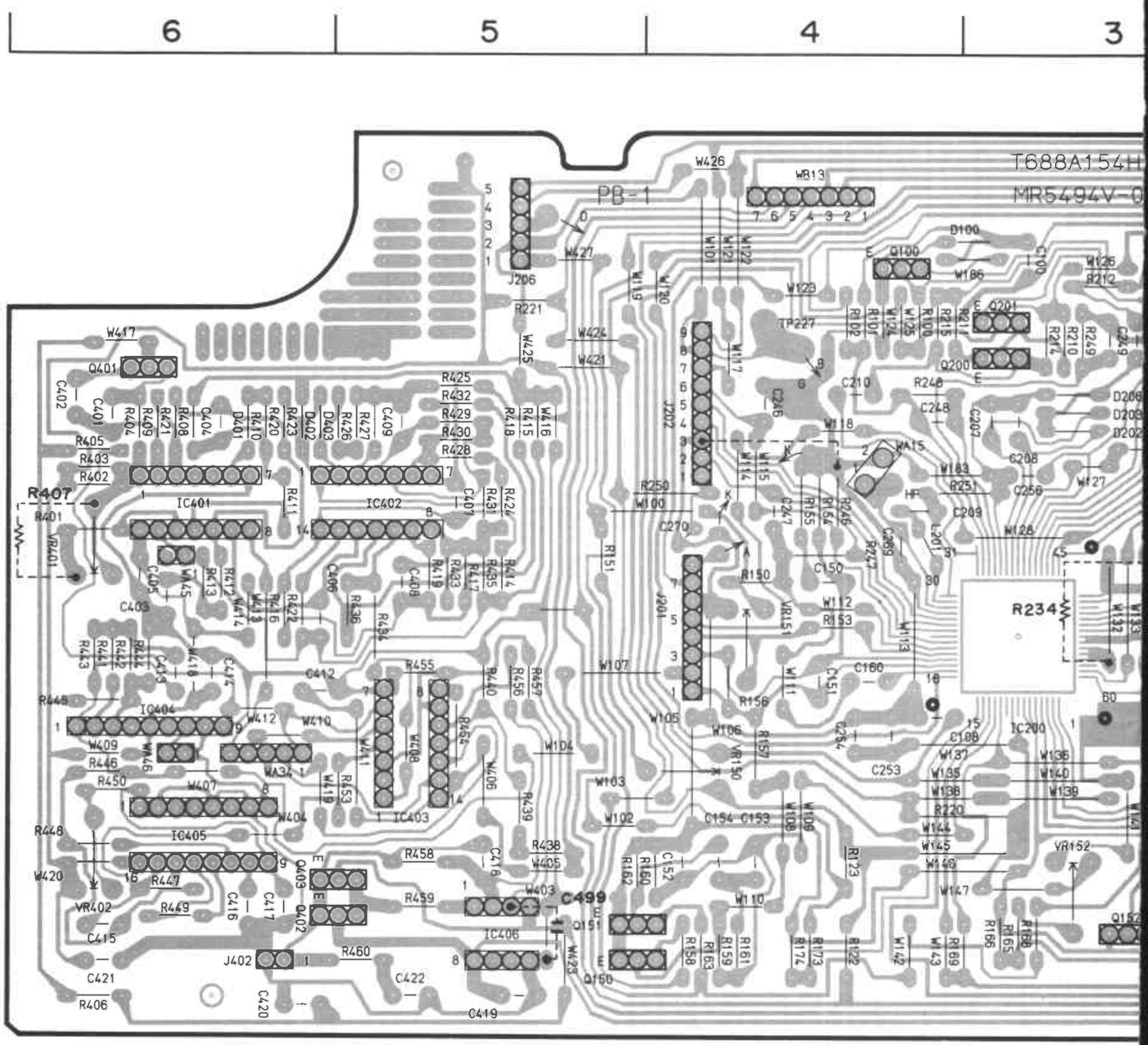
6
5
4
3
T688A154H
MR5494V-0
PB-1
R407
R234
C499
IC401
IC402
IC403
IC404
IC405
IC406
IC200
J206
J202
J201
J402
Q100
Q201
Q200
Q401
Q403
Q402
Q151
Q160
Q152
WA13
WA15
WA34
VR401
VR402
VR151
VR150
VR152
TP227

* This part is placed on the patern side.

Symbol No.	Address
C726	2C
C727	2C
C728	2B
C729	3C
C730	3B
*C740	3C
*C741	3B
C801	1C
C802	1B
C805	1B
C807	1C
C808	1B
C811	1A
D301	4A
D302	4B
D303	6A
D304	4A
D501	2B
*D502	2B
D701	2C
D702	2C
D801	1B
D802	1C
D803	1C
D804	1B
D805	1A
D806	1B
D807	1B
D809	1B
D820	1C
IC301	5A
IC302	6A
IC501	4A
IC502	3A
IC503	2A
IC504	2A
IC505	2B
IC601	5C
IC602	6C
IC603	6B
IC604	5B
IC701	4C
IC702	3C
IC703	3B
IC704	3C
IC705	2C
IC801	1A
IC802	1B
L301	4B
L503	2A
L701	4C
L702	3C
L703	3B
Q301	4A
Q302	4A
Q303	4B
Q304	4B

Symbol No.	Address
Q305	6A
Q306	6A
*Q601	5C
Q701	3C
Q702	3C
Q703	2C
Q704	2B
Q705	1C
Q706	2B
Q707	2B
*Q708	2B
R301	4A
R302	4A
R303	4A
R304	4A
R305	4A
R306	4B
R307	4B
R308	4B
R309	4B
R310	4B
R311	6A
R312	5A
R313	6A
R314	6A
R315	5A
R316	4A
R317	4B
R318	4B
R319	4B
R320	5B
R323	6A
R324	4A
R325	6A
R326	5B
R327	5B
R328	5B
*R500	2B
R501	4A
R502	4A
R503	4A
R504	4A
R505	4B
R506	4A
R507	4A
R508	3B
R509	3B
R510	4B
R511	4B
R512	4B
R513	4B
R515	3A
R517	3A
R518	3B
R519	3B
R524	2A
R525	3A
R526	2A
R527	3A

Symbol No.	Address
R528	2A
R529	2A
R530	2A
R531	3A
R532	3A
R533	2B
R534	2B
R535	2A
R536	2A
R538	4A
R539	4A
R550	3A
*R550	2B
R601	6B
R602	6B
*R604	5C
R701	4C
R702	4C
R703	4C
R704	4B
R705	4C
R706	3C
R707	3C
R708	3C
R709	3C
R710	3C
R711	3C
R712	3C
R713	3C
R714	3C
R715	2C
R716	3C
R717	2C
R718	2C
R719	2C
R720	3C
R721	2C
R722	3C
R723	3B
R724	2C
R725	2C
R726	2C
R727	2C
R728	2C
R729	2C
R730	2C
R731	2C
R732	2C
R733	2C
R734	2C
R735	2C
R736	1C
R737	1C
R738	2C
R739	2B
R740	2B
R741	2C
R742	2C
R743	1C
R744	2B

Symbol No.	Address
R745	2B
*R751	3C
*R752	3B
*R753	2C
*R754	2B
R801	1A
R804	2B
R805	1B
X301	5A
X601	5C
X701	4C

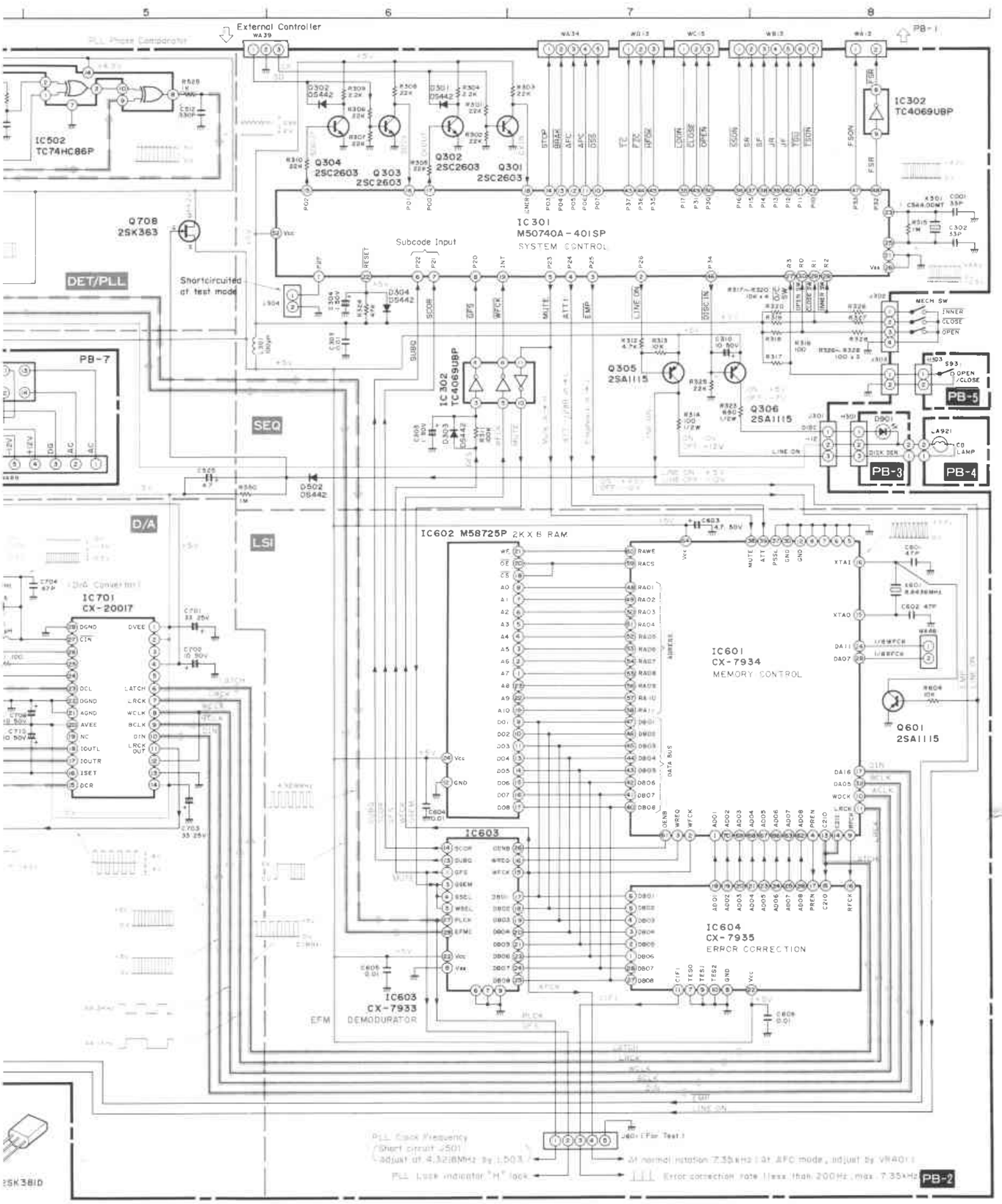
External Controller
IC502 TC74HC86P
IC302 TC4069UBP
IC301 M50740A-401SP SYSTEM CONTROL
Subcode Input
Q708 2SK363
Shortcircuited at test mode
DET/PLL
SEQ
D/A
LSI
Q304 2SC2603
Q303 2SC2603
Q302 2SC2603
Q301 2SC2603
Q305 2SA1115
Q306 2SA1115
MECH SW
INNER
CLOSE
OPEN
S93 OPEN /CLOSE
PB-1
PB-2
PB-3
PB-4
PB-5
PB-7
IC602 M58725P 2K X 8 RAM
IC601 CX-7934 MEMORY CONTROL
IC603 CX-7933 EFM DEMODULATOR
IC604 CX-7935 ERROR CORRECTION
IC701 CX-20017
Q601 2SA1115
PLL Clock Frequency
Short circuit J501
adjust at 4.3218MHz by L503
PLL Lock indicator "H" lock
At normal rotation 7.35kHz (at AFC mode, adjust by VR401)
Error correction rate (less than 200Hz, max. 7.35kHz)

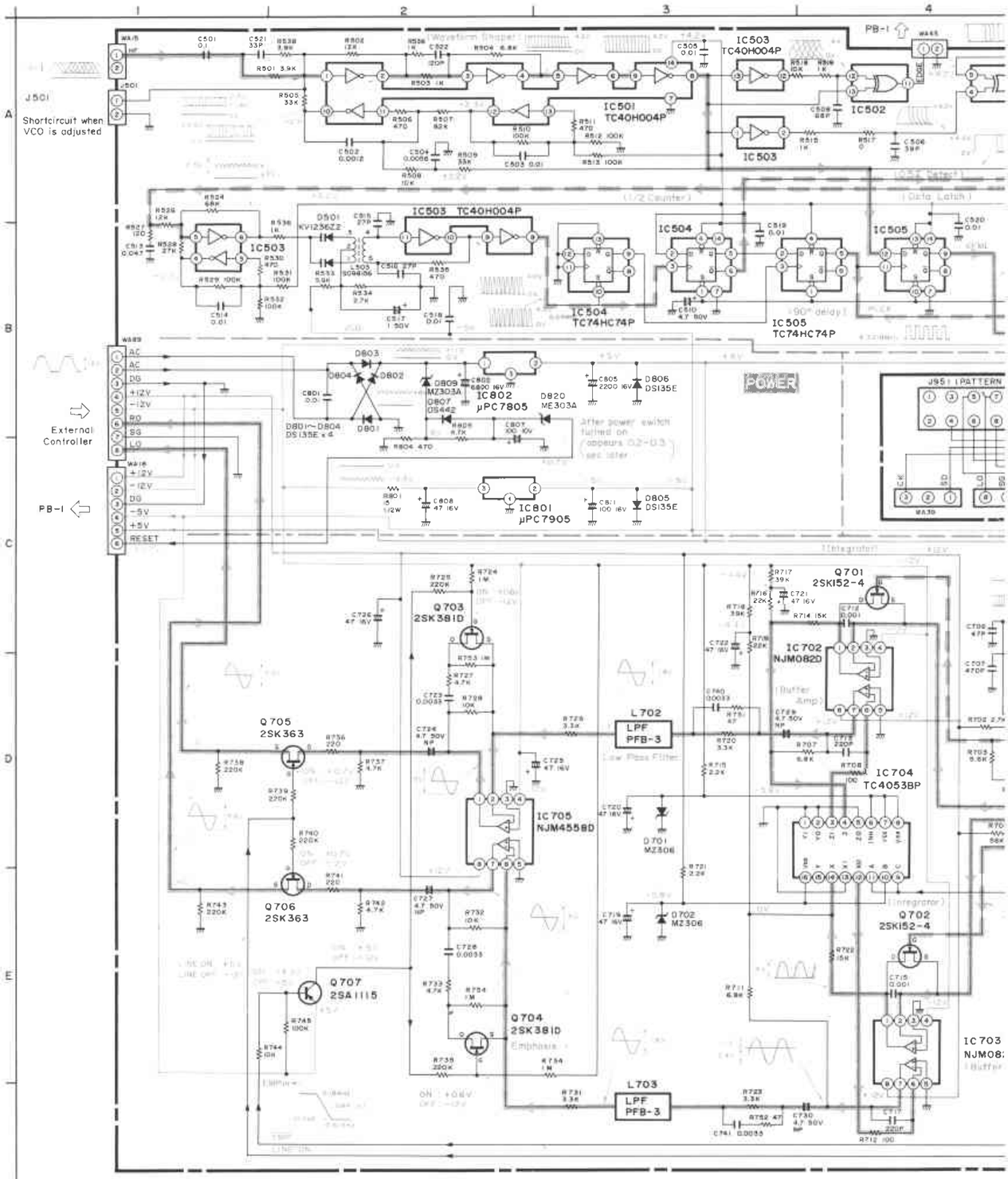

NOTE:

1. Unit of C and R
   - C ..... No symbol; μF, P-symbol; PF
   - R ..... No-symbol; Ω, K-symbol; kΩ, M-symbol; MΩ
   - Wattage for all unspecified resistor are 1/6 W.
2. Voltage are those measured with DC 1MΩ digatal voltmeter.
3. This circuit diagram may be changed due to circuit improvement.

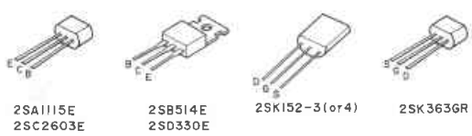

2SA1115E 2SC2603E | 2SB514E 2SD330E | 2SK152-3(or4) | 2SK363GR

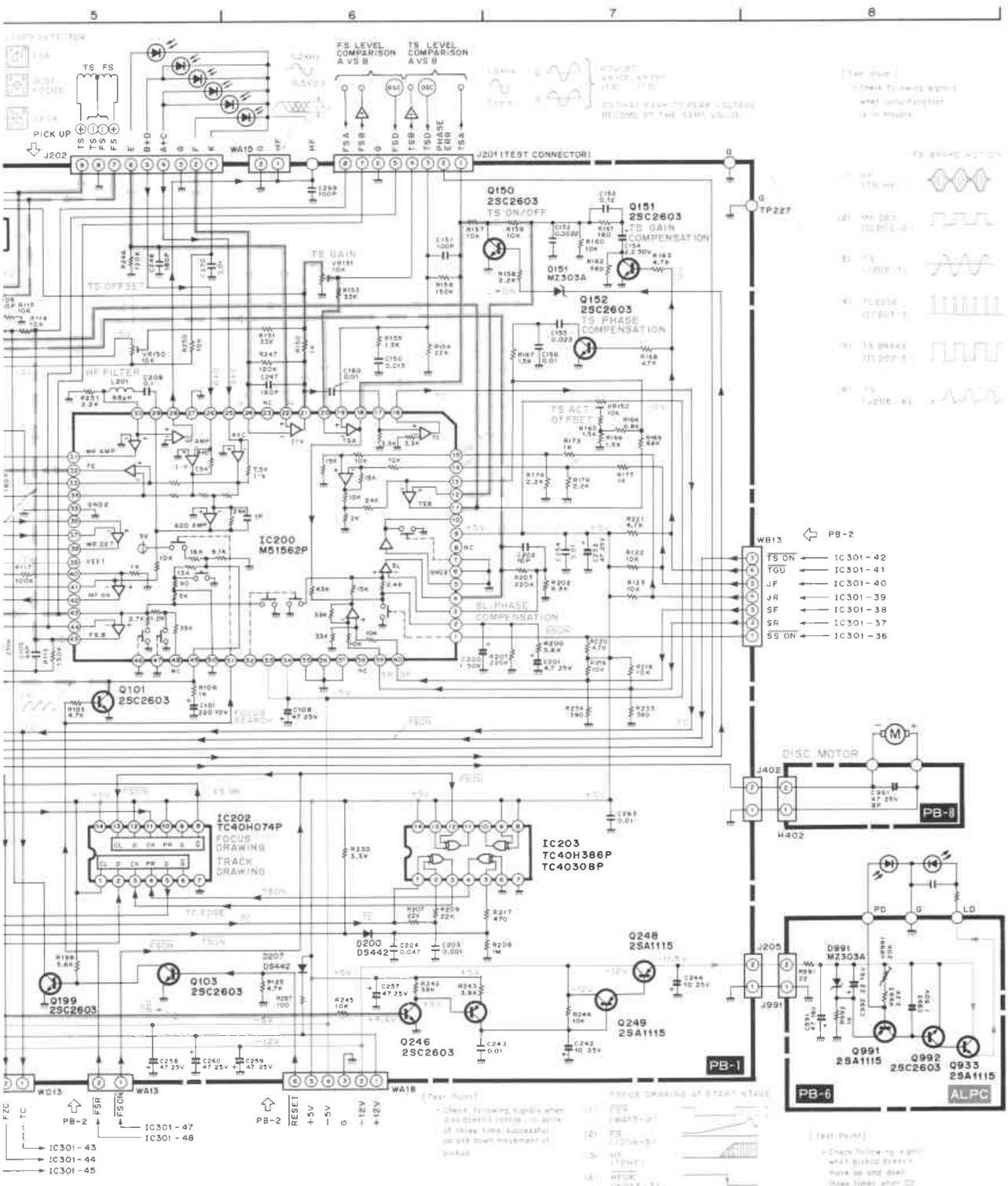
5
6
7
8
PICK UP
J202
TS FS
FS LEVEL COMPARISON A VS B
TS LEVEL COMPARISON A VS B
J201 (TEST CONNECTOR)
TP227
Q150 2SC2603 TS ON/OFF
Q151 2SC2603 TS GAIN COMPENSATION
D151 MZ303A
Q152 2SC2603 TS PHASE COMPENSATION
TS GAIN
TS OFFSET
HF FILTER
IC200 M51562P
Q101 2SC2603
IC202 TC40H074P FOCUS DRAWING TRACK DRAWING
IC203 TC40H386P TC40308P
D200 DS442
D207 DS442
Q199 2SC2603
Q103 2SC2603
Q246 2SC2603
Q248 2SA1115
Q249 2SA1115
D991 MZ303A
Q991 2SA1115
Q992 2SC2603
Q933 2SA1115
WB13
PB-2
TS ON ← IC301-42
TGU ← IC301-41
JF ← IC301-40
JR ← IC301-39
SF ← IC301-38
SR ← IC301-37
SS ON ← IC301-36
DISC MOTOR
J402
PB-8
PB-1
PB-6
ALPC
WD13
WA13
WA18
FZC ← IC301-43
TC ← IC301-44
FSR ← IC301-47
FSON ← IC301-46
RESET ← IC301-45
+5V
−5V
G
−12V
+12V

SCHEMATIC DIAGRAM

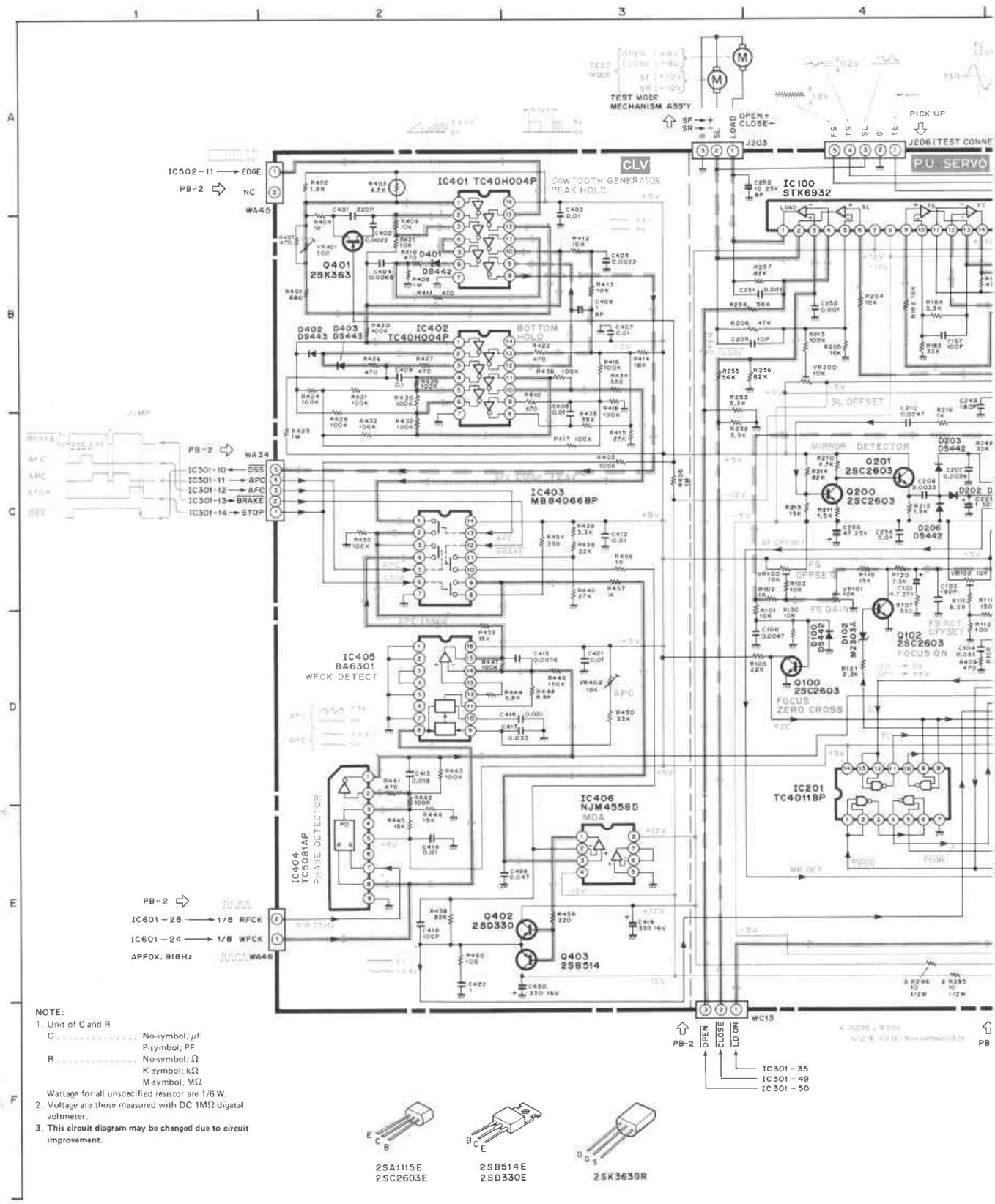

NOTE:

1. Unit of C and R
   C ..... No symbol; μF
   P-symbol; PF
   R ..... No symbol; Ω
   K-symbol; kΩ
   M-symbol; MΩ
   Wattage for all unspecified resistor are 1/6 W.
2. Voltage are those measured with DC 1MΩ digatal voltmeter.
3. **This circuit diagram may be changed due to circuit improvement.**

PACKING INSTRUCTIONS

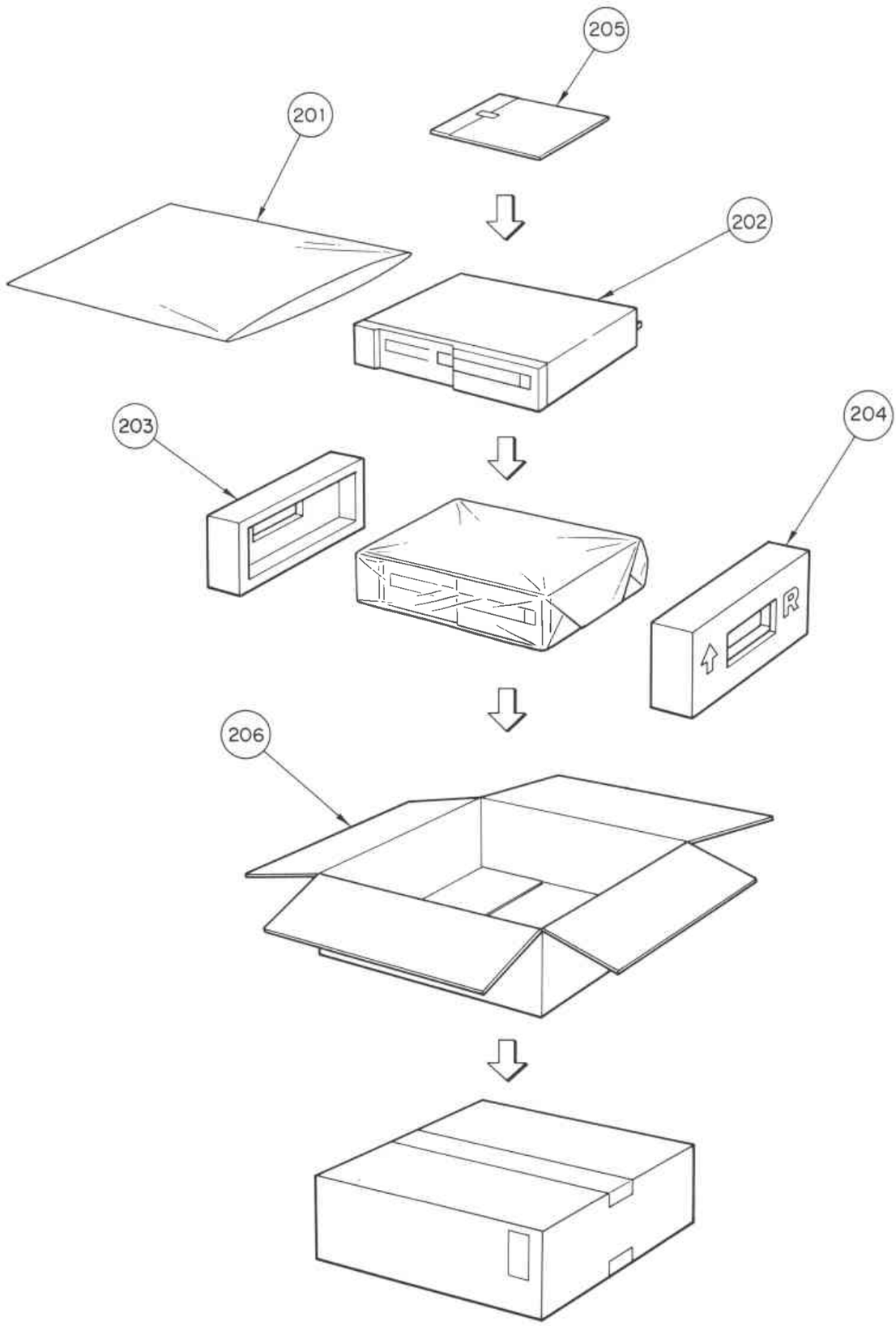

PARTS LIST

Part No.	Description	Symbol No.
	Diodes	
M47214347	DS442	D100, 200, 202, 203, 206, 301, 302, 303, 304, 401, 402, 403, 807
M40001320	DS135E	D801, 802, 803, 804, 805, 806
M05174321	MZ303A	D102, 151, 809, 820
M72900550	MZ306A	D701, 702
M07708328	KV1236Z2	D501
M40001321	SLF206B	D901
	Transisters	
M17517582	2SC2603E	Q100, 101, 102, 103, 150, 151, 152, 199, 200, 201, 246, 301, 302, 303, 304, 992
M17517581	2SA1115E	Q247, 248, 249, 305, 306, 601, 707, 991, 993
M40001302	2SD330E	Q402
M40001303	2SB514E	Q403
M07708306	2SK152-3 (or 4)	Q701, 702
M40001304	2SK381D	Q703, 704
M40001301	2SK363GR	Q705, 706, 708
	IC	
M40001331	TC4069BP	IC302
M40001332	M50740A-401SP	IC301
M40001333	MB84066BP	IC403
M40001334	TC40H074P	IC202
M40001335	TC4011BP	IC201
M40001336	TC4030BP/TC40H386P	IC203
M40001337	STK6932	IC100
M40001338	M51562P	IC200
M40001339	TC4053BP	IC704
M07708312	UPC7905H	IC801
M72900515	UPC7805H	IC802
M07708319	TC40H004P	IC401, 402, 501, 503
M07708330	CX7934	IC601
M07708331	M58725P	IC602
M07708332	CX7935	IC604
M07708333	CX7933	IC603
M07708336	TC5081AP	IC404
M07708337	BA6301	TC405
M07708338	NJM082D	IC702, 703
M07708339	NJM4558D	IC406, 705
M07708390	TC74HC86P	IC502
M07708393	TC74HC74P	IC504, 505
M07708394	CX20017	IC701
	Electrical Parts	
T700P781H51	VR-SF V8K4-11 500Ω	VR401
T700P781H55	VR-SF V8K4-11 10KΩ	VR100, 101, 102, 150, 151, 152, 200, 402
T719P133H31	COIL-P LAL03NA680K	L201
T719P132H33	COIL-P LAL04NA101K	L301
M40001437	COIL-RF S098156	L503
T719P133H05	COIL-P LAL03NAR47M	L701
M40001438	LPF PFB-3	L702, 703
M40001345	Crystal HC-43/U35.002MHz	X701
M07708345	Crystal HC-43/U8.6436MHz	X601
M72900592	CSA 4.00MT	X301

EXPLODED VIEW

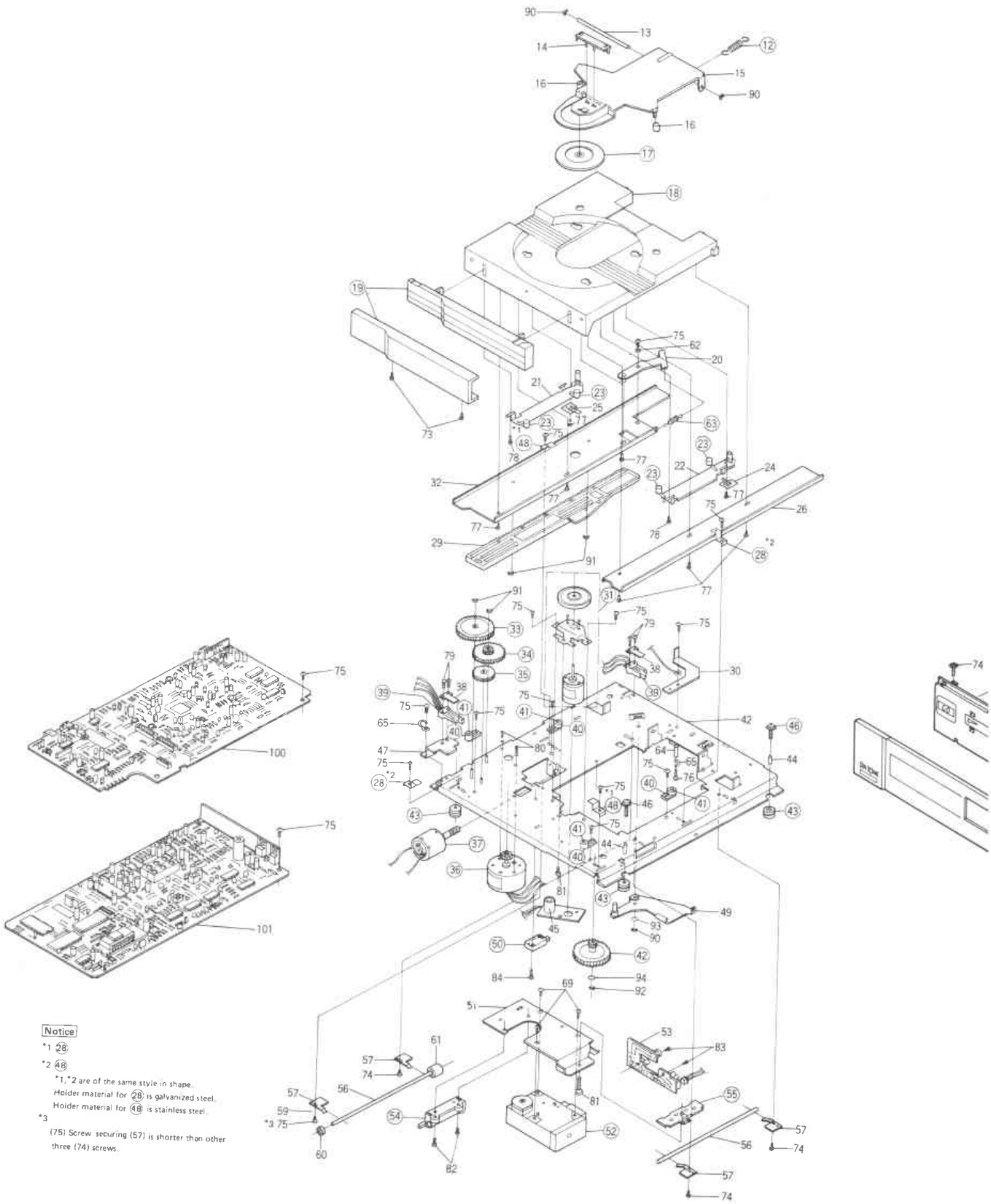

Notice

*1 (28)

*2 (48)

*1, *2 are of the same style in shape.
Holder material for (28) is galvanized steel.
Holder material for (48) is stainless steel.

*3

(75) Screw securing (57) is shorter than other three (74) screws.

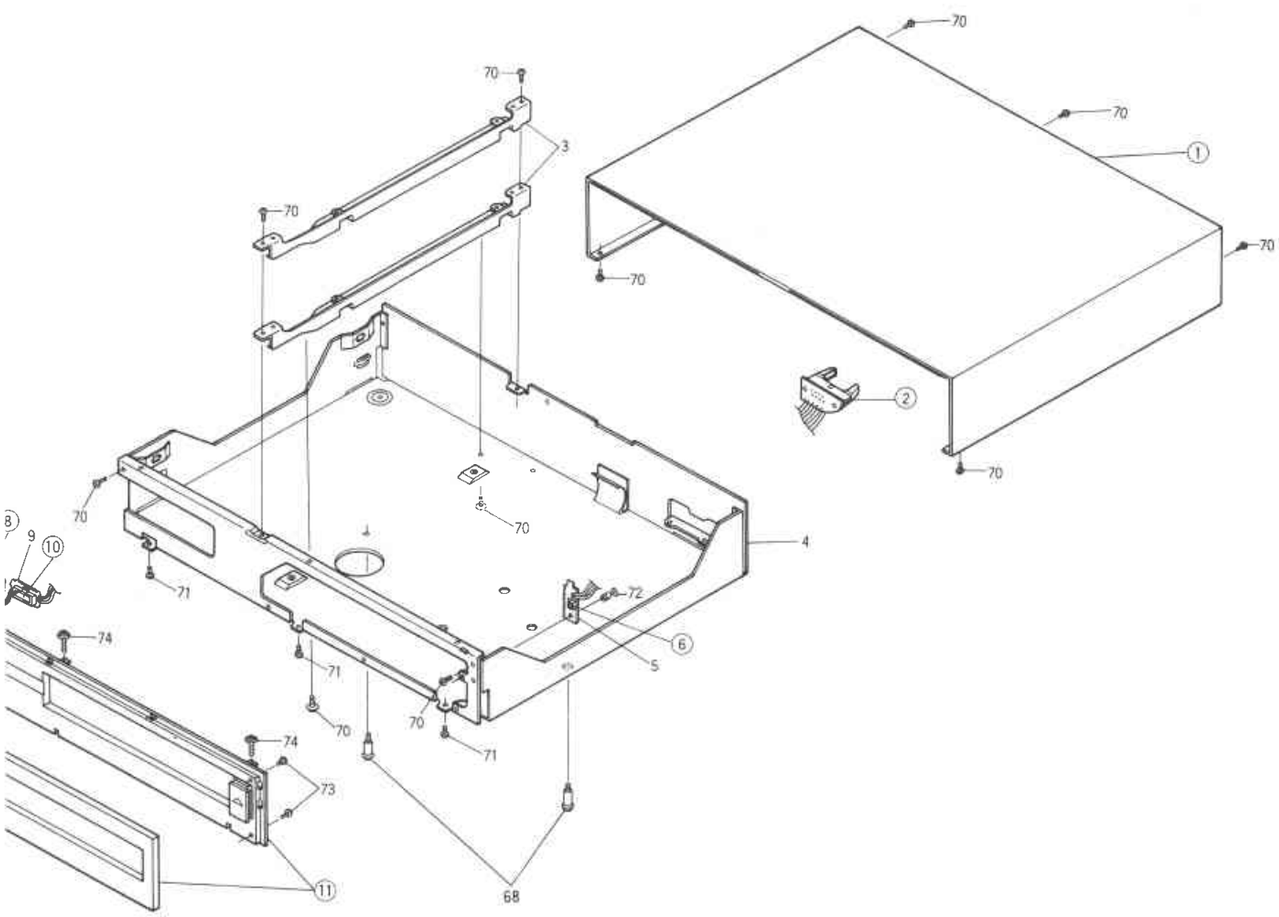
70
70
1
70
70
70
2
70
70
3
70
70
4
71
72
6
5
71
70
70
71
74
74
73
11
68
8
9
10

REF NO.	PARTS NO.	DESCRIPTION	Q'TY
1	M40001104	Case	1
2	M40001447	Plug 5330-14BS1	1
3	T260C937H01	PCB Holder	2
4	–	Chassis	1
5	–	PCB PB-5	1
6	M40001381	Push Switch	1
7	–	PCB PB-4	1
8	M40001309	Lamp MDT 12V 55mA	1
9	–	PCB PB-3	1
10	M40001321	DIODE (LED) SLF2068	1
11	M40200100	Panel Ass'y	1
12	M40001760	Spring-WI	1
13	–	Shaft	1
14	–	Holder-U	1
15	–	Lever	1
16	–	Holder	2
17	M40001655	Holder Ass'y	1
18	M40001626	Disc Tray Ass'y	1
19	M40001137	Cover Tray Ass'y	1
20	–	Lever Holder Ass'y	1
21	–	Holder Disc L	1
22	–	Holder Disc R	1
23	M40001186	Cushion Gum	4
24	–	Spring-P-R	1
25	–	Spring-P-L	1
26	–	Plate-right	1
27	–	Spring P2 Ass'y	2
28	M40001252	Holder Z2 Ass'y(Bearing only)	2
29	–	Gear Rack	1
30	–	Plate Holder	1
31	M40001552	Motor Ass'y-T.T.	1
32	–	Plate Left Ass'y	1
33	M40001731	Gear R3	1
34	M40001730	Gear R2	1
35	M40001732	Gear R4	1
36	M40001551	Motor Ass'y-LD	1
37	M40001550	Motor Ass'y-SL	1
38	–	Sheet	2
39	M40001380	Micro Switch	2
40	M40001656	Bearing Holder	4
41	M40001253	Ball	4
42	–	Base Ass'y	1
43	M40001185	Cushion Gum	4
44	–	Spacer	4
45	–	Capacitor	1
46	M40001770	Screw Metal	4
47	–	Holder Z	1
48	M40001252	Holder Z2 Ass'y(Bearing only)	2
49	–	Lever P Ass'y	1
50	M40001382	Slide Switch	1
51	–	Plate Holder	1
52	M40001600	Pick up Ass'y	1
53	–	PCB PB-6	1
54	M40001644	Rack Ass'y	1
55	–	Adjuster	1
56	–	Shaft-L	2
57	–	Holder-L	4
58			
59	–	Collar	1
60	–	Cushion Gum	1

REF. NO.	PARTS NO.	DESCRIPTION	Q'TY
61	–	Cushion Gum	1
62	–	Collar	1
63	M40001761	Spring W2	1
64	–	Spacer	1
65	–	Clamper	2
66			
67			
68	T029D177H01	Screw-Shipping	2
69	T004P003H20	Screw MBFB M2.6x5mm	3
70	T029P282H31	Screw GBFB 3 x 6 mm	11
71	T014P003H32	Screw TBFB 3 x 8 mm	3
72	T079P031H01	Rivet-PL	1
73	T014P003H21	Screw TBFB 2.6 x 6 mm	4
74	T029P253H31	Screw GPFB 3 x 6 mm	6
75	T029P282H30	Screw GBFB 3 x 5 mm	16
76	T029P282H37	Screw GBFB 3 x 18 mm	1
77	T014P003H32	Screw TBFB 3 x 8 mm	8
78	T010P901H19	Screw TPFB-Z 3 x 8 mm	2
79	T029D180H03	Screw-SPL	4
80	T029D180H02	Screw-SPL	2
81	T034P105H17	Bolt-IFZ	2
82	T029P411H32	Screw APFZ M 3 x 8 mm	2
83	T004P003H11	Screw MBFB M 2 x 4 mm	2
84	T004P003H23	Screw MBFB M2.6 x 10 mm	1
85			
86			
87			
88			
89			
90	T060P000H13	R-Ring E3	3
91	T060P000H30	R-Ring E2.5	2
92	T060P000H12	R-Ring E2	1
93	T116D232H02	Washer-PL	1
94	T116D232H01	Washer-PL	1
100	–	PCB PB-1, PB-2	1
101	–	PCB PB-2	1
201	–	Packing Bag	1
202	–	CD Player DP-45P	1
203	T770A243H02	Cushion-L	1
204	T770A244H02	Cushion-R	1
205	T924D002H09	IB (Six Languages)	1
206	T752B482H05	Packing Case	1

MITSUBISHI ELECTRIC CORPORATION
HEAD OFFICE MITSUBISHI DENKI BLDG. MARUNOUCHI TOKYO 100 TELEX J24532 CABLE MELCO TOKYO

DP-45P-EU
A-1004
Printed in Japan