SA-51H SCHEMATIC DIAGRAM

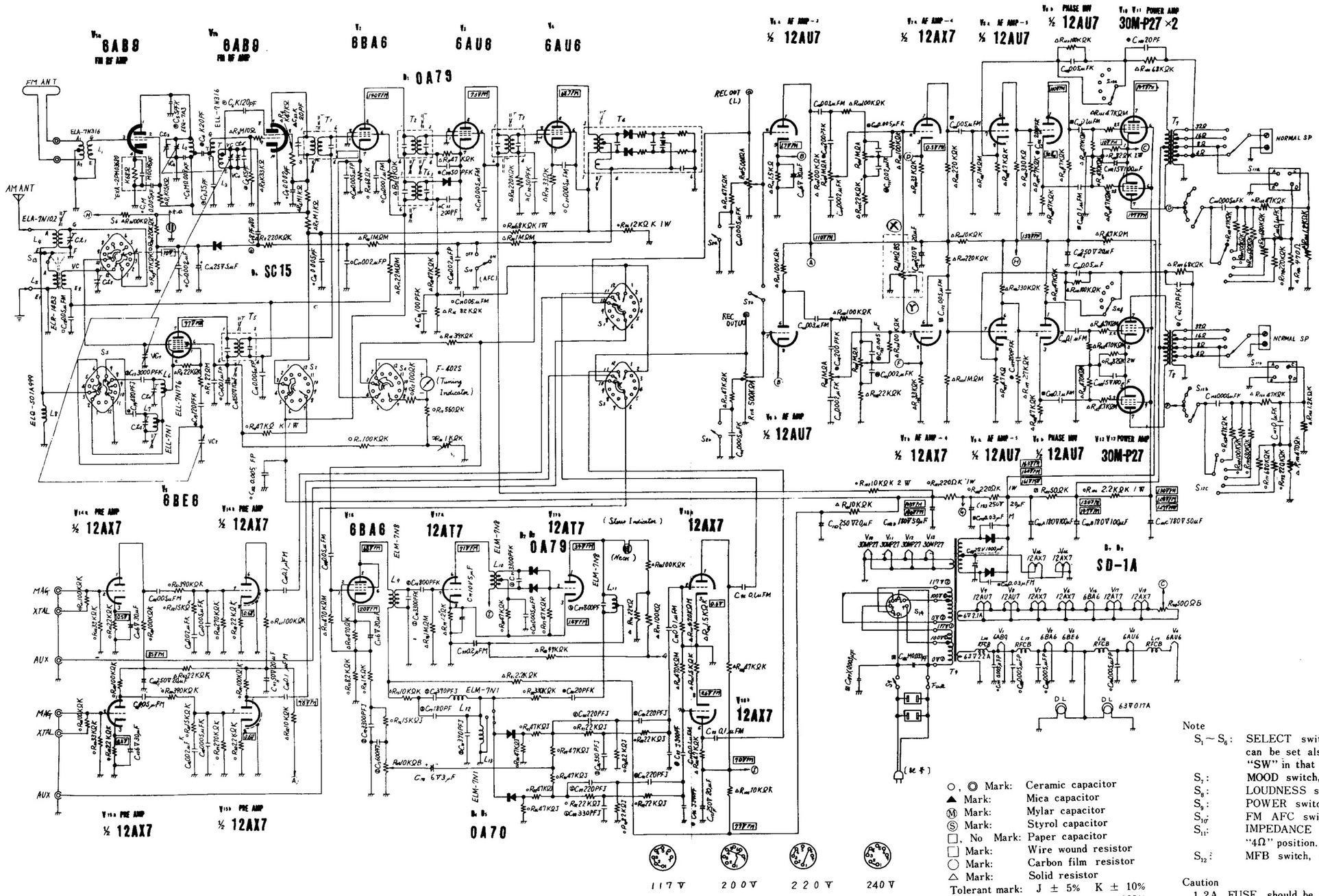

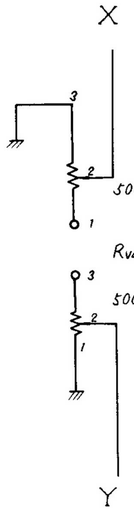

Some chassis are connected as above in the dotted line part.

○, ◎ Mark: Ceramic capacitor
▲ Mark: Mica capacitor
Ⓜ Mark: Mylar capacitor
Ⓢ Mark: Styrol capacitor
□, No Mark: Paper capacitor
□ Mark: Wire wound resistor
○ Mark: Carbon film resistor
△ Mark: Solid resistor

Tolerant mark: J ± 5% K ± 10%
M ± 20% P +100% − 0%
X +40% −20%

Note

$S_1 \sim S_6$: SELECT switch, shown at "AUX" position, can be set also to "PH", "FM", "MW" and "SW" in that order.
S_7: MOOD switch, shown at "STEREO" position.
S_8: LOUDNESS switch, shown at "ON" position.
S_9: POWER switch, shown at "OFF" position.
S_{10}: FM AFC swich, shown at "ON" position.
S_{11}: IMPEDANCE SELECT switch, shown at "4Ω" position.
S_{12}: MFB switch, shown at "OFF" position.

Caution

1. 2A FUSE should be used in case of 200~240V AC power source.
2. 3A FUSE should be used in case of 117V AC power source.

SA-51H CHASSIS MAIN PARTS LOCATION

(Front View)

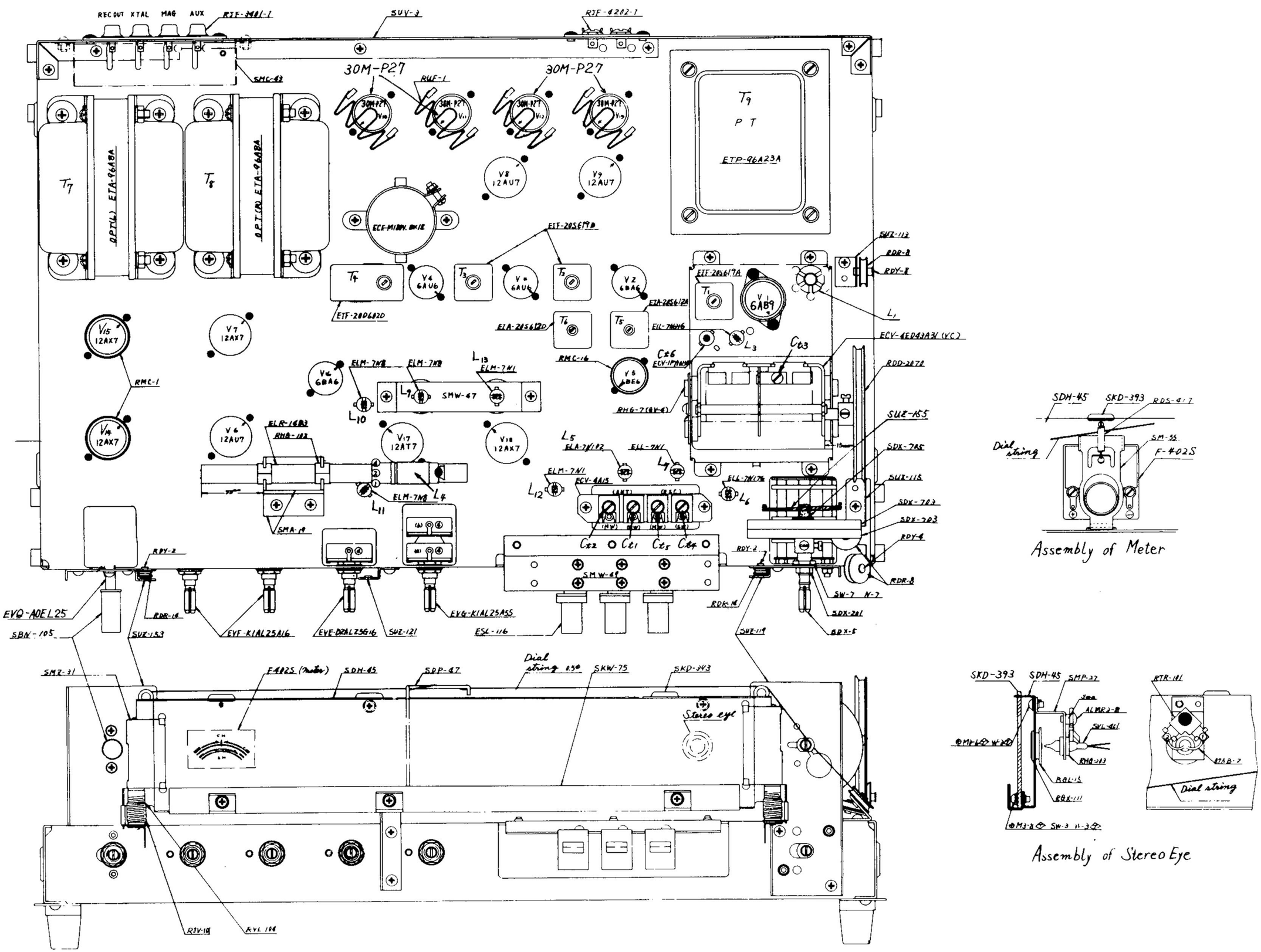

Assembly of Meter

Assembly of Stereo Eye