SERVICE MANUAL

2600

POWER AMPLIFIER

SM-674 8704

© 1986 BY NAD 426 PRINTED IN JAPAN

NAD ELECTRONICS

BOSTON/LONDON

Contents

	Page
VOLTAGE CONVERSION	2
SPECIFICATIONS	4
ALIGNMENT PROCEDURES	5
WIRING DIAGRAM	6
BLOCK DIAGRAM	7
SCHEMATIC AND PCB LAYOUT	8
EXPLODED VIEW AND PARTS LIST	13
SCHEMATIC DIAGRAM	15
ELECTRICAL PARTS LIST	17

VOLTAGE CONVERSION

The units for U.K., Australia, and Europe are incorporated with voltage selectors. When changing the voltage, set up the mark " ▷ " of the selector to an appropriate indication voltage as shown in the figure.

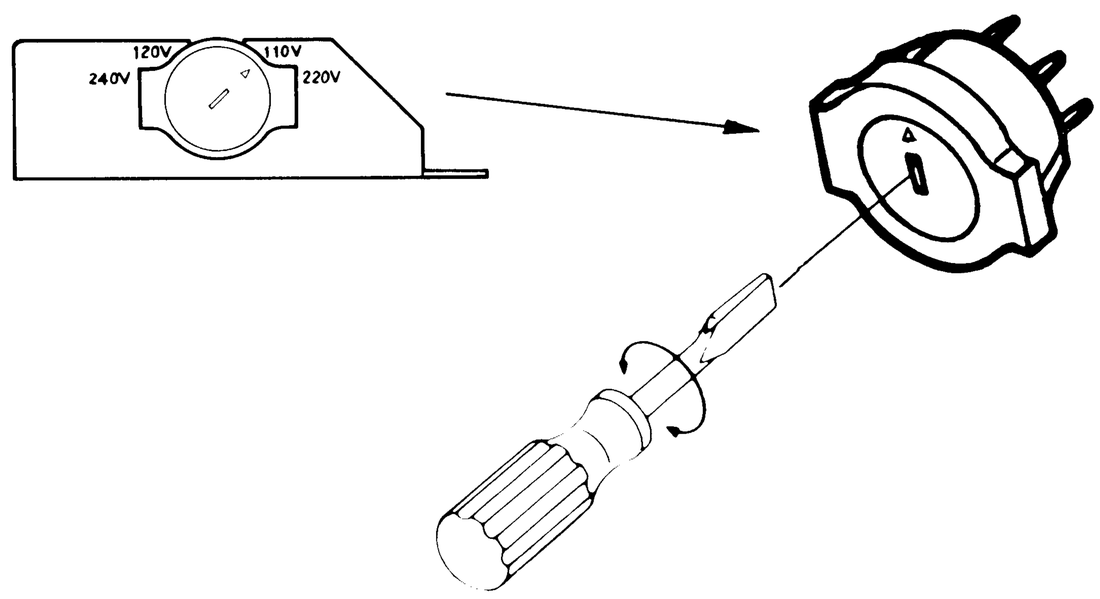

The mains fuse must be changed according to voltage: 110-120V 10A, 220-240V 5A.

REAR PANEL

1. AC Line Cord.
2. AC Line Fuse (220V, 240V Models Only).
3. Speaker Impedance.
4. Soft Clipping.
5. Speaker terminals.
6. Inputs (Normal and Lab).
7. Bridging.

CAUTION
RISK OF ELECTRIC SHOCK
DO NOT OPEN

CAUTION TO REDUCE THE RISK OF ELECTRIC SHOCK, DO NOT REMOVE COVER (OR BACK) NO USER-SERVICEABLE PARTS INSIDE REFER SERVICING TO QUALIFIED SERVICE PERSONNEL

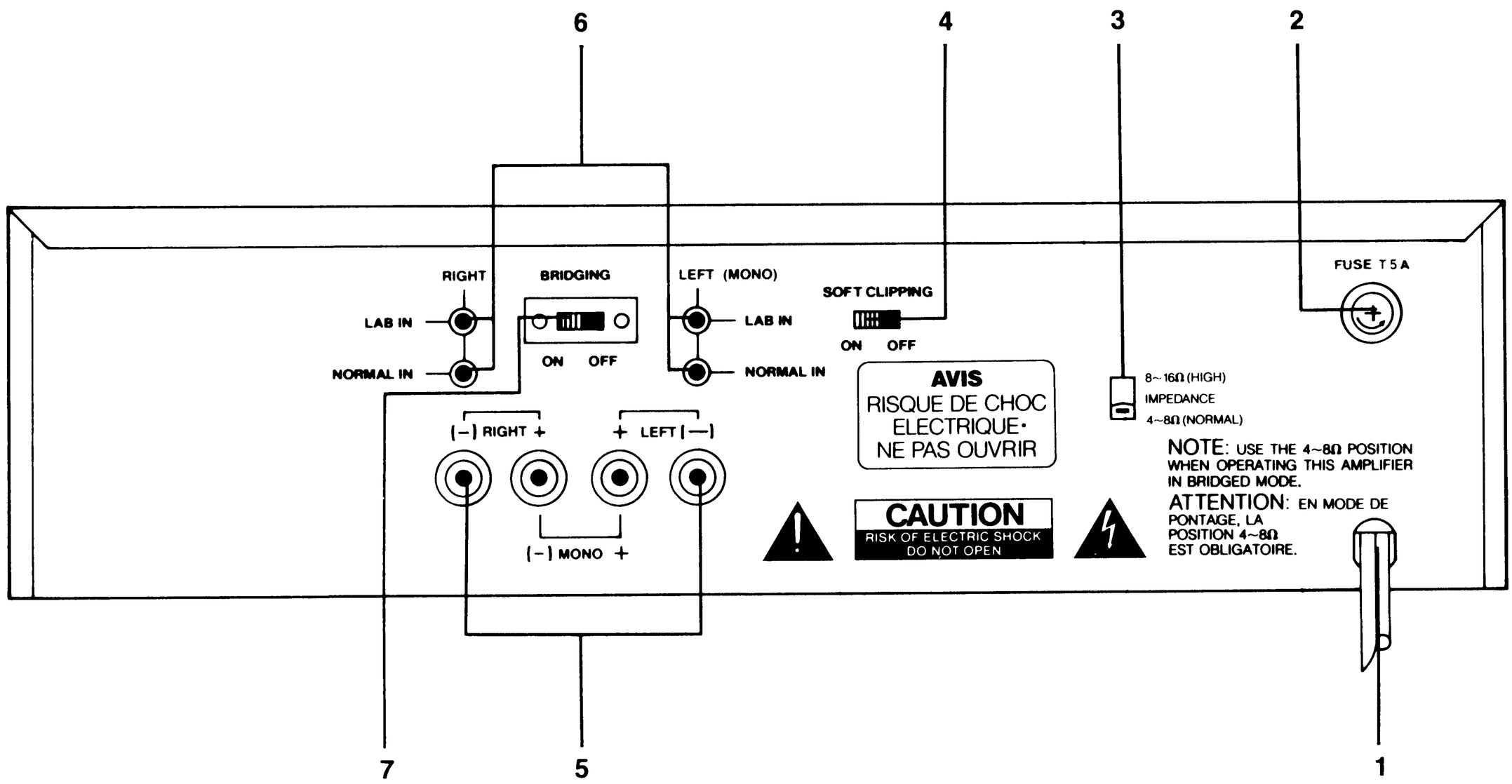

FRONT PANEL

1. Power.
2. Input Level.
3. Soft Clipping Indicator.
4. Protection Indicator.
5. Overload Indicator.

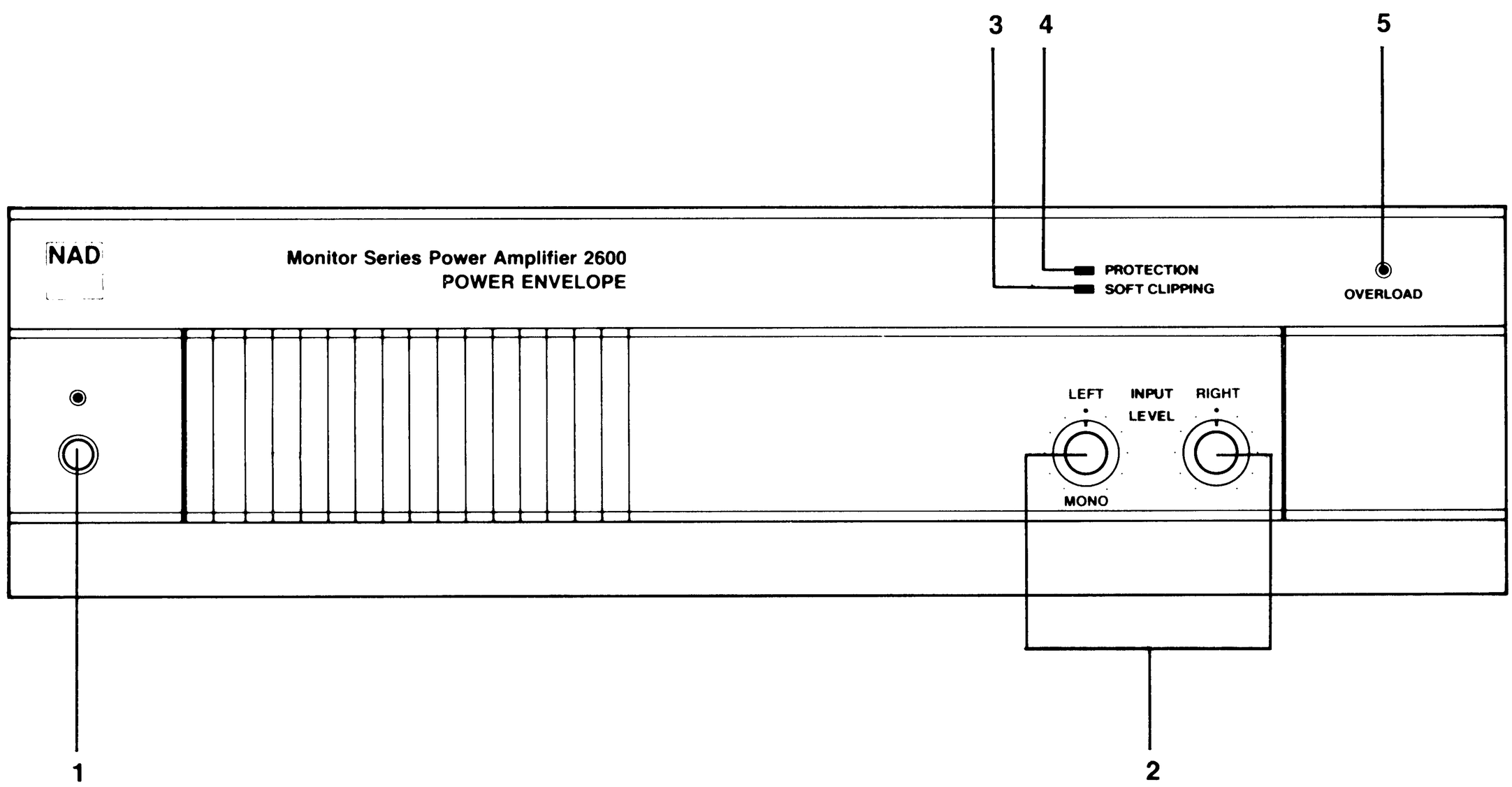

SPECIFICATIONS

FEATURES

A. Control and Switch
1. AC Power switch : On-Off ..... Push type
2. Bridging switch : Normal-Bridging ... Slide type with Locking plate
3. Soft Clipping : On-Off ..... Slide type
4. Input Level control : Min.-Max. ..... Rotary type
5. Speaker Load switch : 4Ω–8Ω ..... Slide type

B.
1. Speaker terminal : 4P army type binding post for banana plug
2. AC Line Cord
[A]-Version for U.S.A. : UL-1 type
[A₁]-Version for Canada : UL-1 type
[B]-Version for U.K. : CEE2 type
[B₁]-Version for Australia, N.Z. : S type
[C]-Version for Scandinavia : CEE2 type
[C₁]-Version for W.Germany : CEE2 type
3. Normal input : RCA type pin jack (2P)
4. Lab input : RCA type pin jack (2P)

C. Display Indicators
Power : Green
Soft clipping : Yellow
Overload : Red
Protection : Red

D. Output Load
Speaker Output : 8Ω/4Ω

E. Maximum Power Consumption : 970VA

F. AC Power Supply
[A]-Version for U.S.A. : 120V 60Hz
[A₁]-Version for Canada : 120V 60Hz
[B]-Version for U.K. : 240V 50Hz
(110V/120V/220V/240V switchable)
[B₁]-Version for Australia, N.Z. : 240V 50Hz
(110V/120V/220V/240V switchable)
[C]-Version for Scandinavia : 220V 50Hz
(110V/120V/220V/240V switchable)
[C₁]-Version for W.Germany : 220V 50Hz
(110V/120V/220V/240V switchable)

G. Netweight and Dimension (Approx.)
1. Netweight : 13Kg
2. Dimensions (W×H×D) : 435×128.5×392 (mm)

ELECTRICAL SPECIFICATION

	Nominal	Limit	Unit
1. Sensitivity	1.0	±1.5dB	V
Input : 1000Hz			
Output : 150W, 8Ω			
2. Channel Difference		less than 1	dB
3. Output Power			
Input : LAB in			
Output : 0.05% THD			
20–20000Hz continuous both ch. driven			
8Ω		more than 150	W
4Ω		more than 150	W
4. Clipping Power			
Input : LAB in			
Output : 1% THD			
1000Hz continuous both ch. driven			
8Ω load	200	180	W
4Ω load	200	180	W
5. Dynamic Power			
Input : LAB in			
Output : Clipping point			
1000Hz 20ms IHF dynamic wave both ch. driven			
8Ω	400	380	W
4Ω	500	450	W
6. IM Distortion		less than 0.05	%
Input : LAB in 60Hz : 7000Hz = 4 : 1			
Output : from 250mW–150W			
both ch. driven 8Ω load			
7. THD		less than 0.05	%
Input : LAB in			
Output : 20–20000Hz from 250mW–150W			
both ch. driven 8Ω load			
8. Frequency response (LAB in)		±0.5dB	dB
Input : LAB in			
Output : 15W, 8Ω			
20–20000Hz			
9. Frequency response (Nor in)			
Input : Nor in			
Output : 15W, 8Ω			
600Ω/both ch. driven 12dB/Octave			
at 14Hz	–3	–3±1.5	dB
at 40kHz	–3	–3±1.5	dB
10. Damping Factor	120	100	—
at 50Hz 8Ω load at 100W			
11. Slew Rate	25	23	V/μsec
12. Signal to Noise Ratio		more than 110	dB
Input shorted			
Ref. Rated power			
(VR Max. IHF-A weighted)			
13. Residual Noise (VR Min.)			
unweighted		less than 0.5	mV
weighted		less than 0.1	mV
14. Input Impedance		more than 20	kΩ
15. Cross Talk			
Between the channels of stereo equipment			
Input : LAB in ⟨shorted⟩ 8Ω load			
1000Hz	80	76	dB
20000Hz	63	56	dB
16. Soft Clip Level			
(when switched in just at onset of clipping)			
4Ω	–0.5	–0.5±0.4	dB
8Ω	–0.5	–0.5±0.4	dB
17. Peak short term ⟨1 msec⟩			
O/P current	50	45	A
18. THD (No load)		less than 0.1	%
Input : LAB in			
Output : 20kHz 60V-rms			

* Unless otherwise specified procedure shall be made in accordance with IHF-A202.

ALIGNMENT PROCEDURES

Condition

Preheat . . . . . more than 15 minutes
Speaker load . . . . . 8 ohms (dummy or speaker)
Input . . . . . , ... No signal

Step	Output Indication / Connection	Adjustment	Adjust for
CENTER DC VOLTAGE			
1	DC digital voltmeter / Speaker terminals	SVR201 (L ch) SVR202 (R ch)	0±5 mV
IDLING			
2	DC digital voltmeter / TP201/TP202 (L/R)	SVR301 (L ch) SVR302 (R ch)	7.5±0.5mV

MAL-P.C. Board

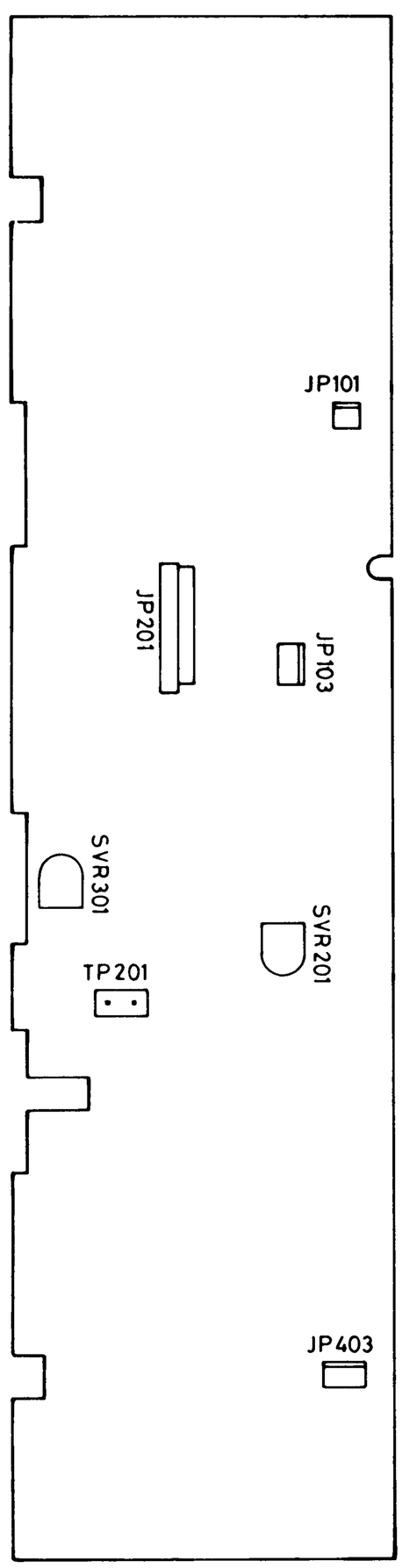

MAR-P.C. Board

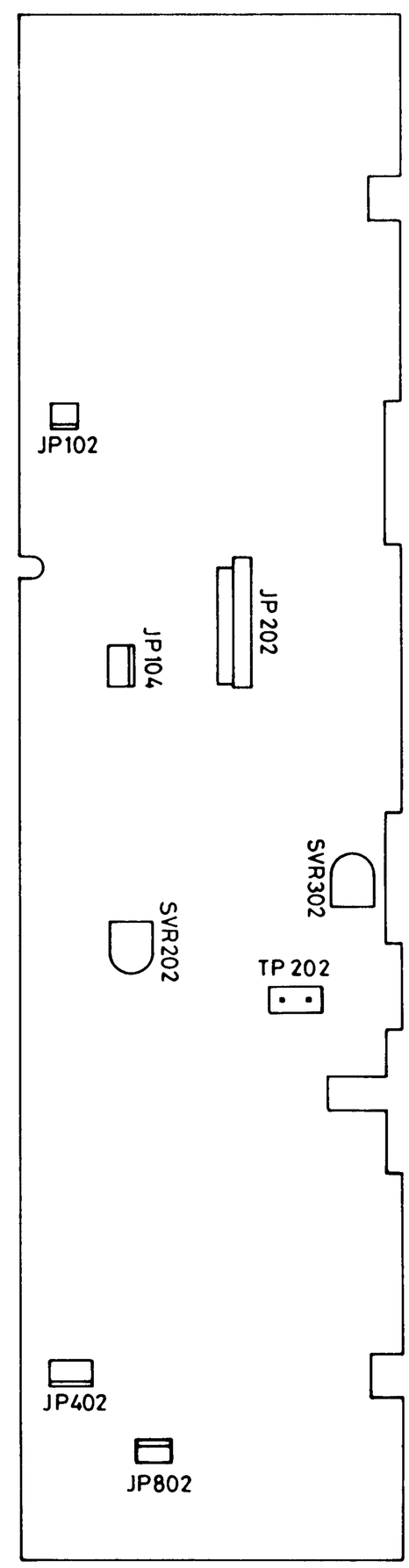

WIRING DIAGRAM (Component side)

[A, A1]-Version for U.S.A., Canada

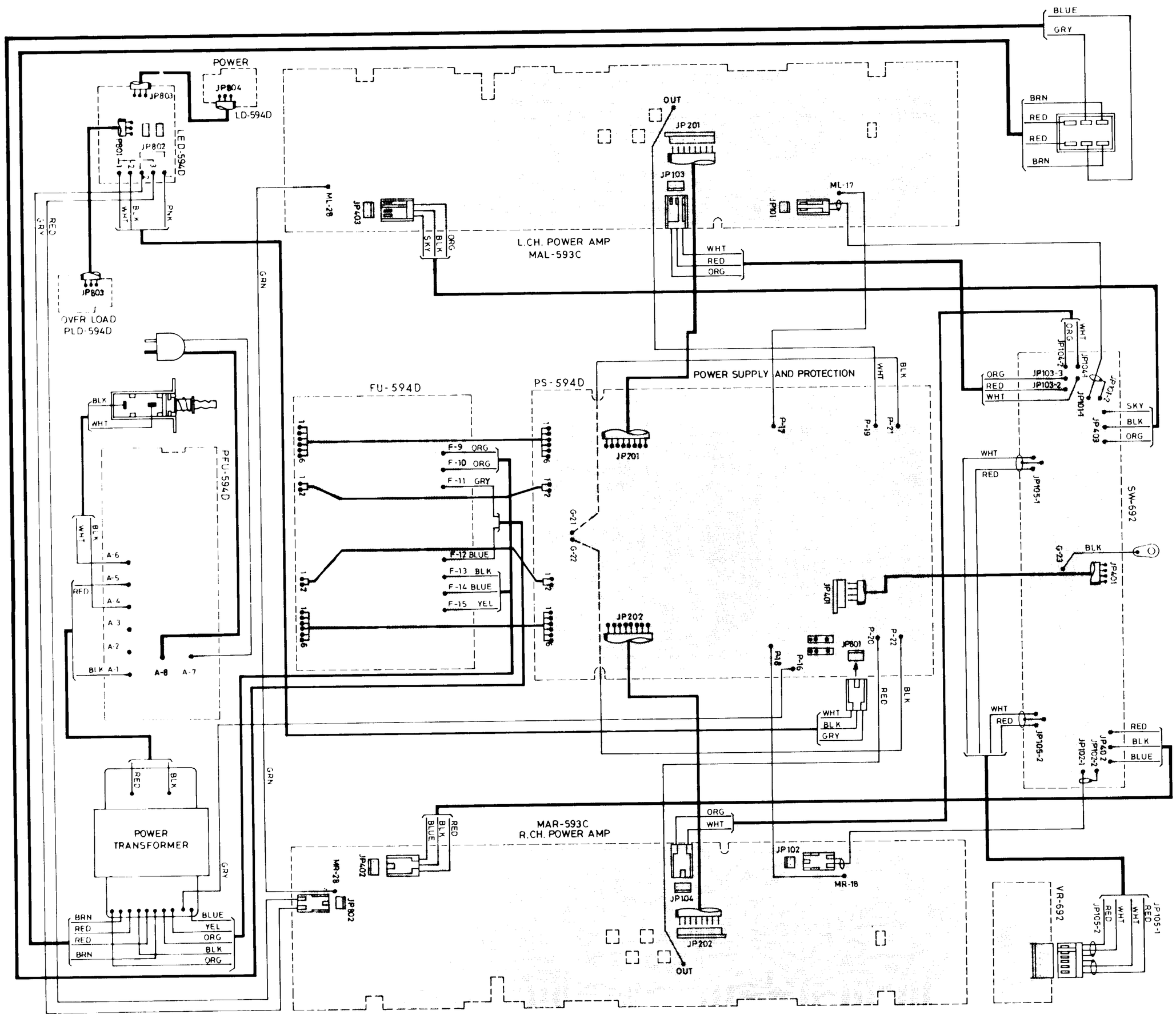

[B, B1, C, C1]-Version for U.K., Australia / N.Z., Scandinavia, W.Germany

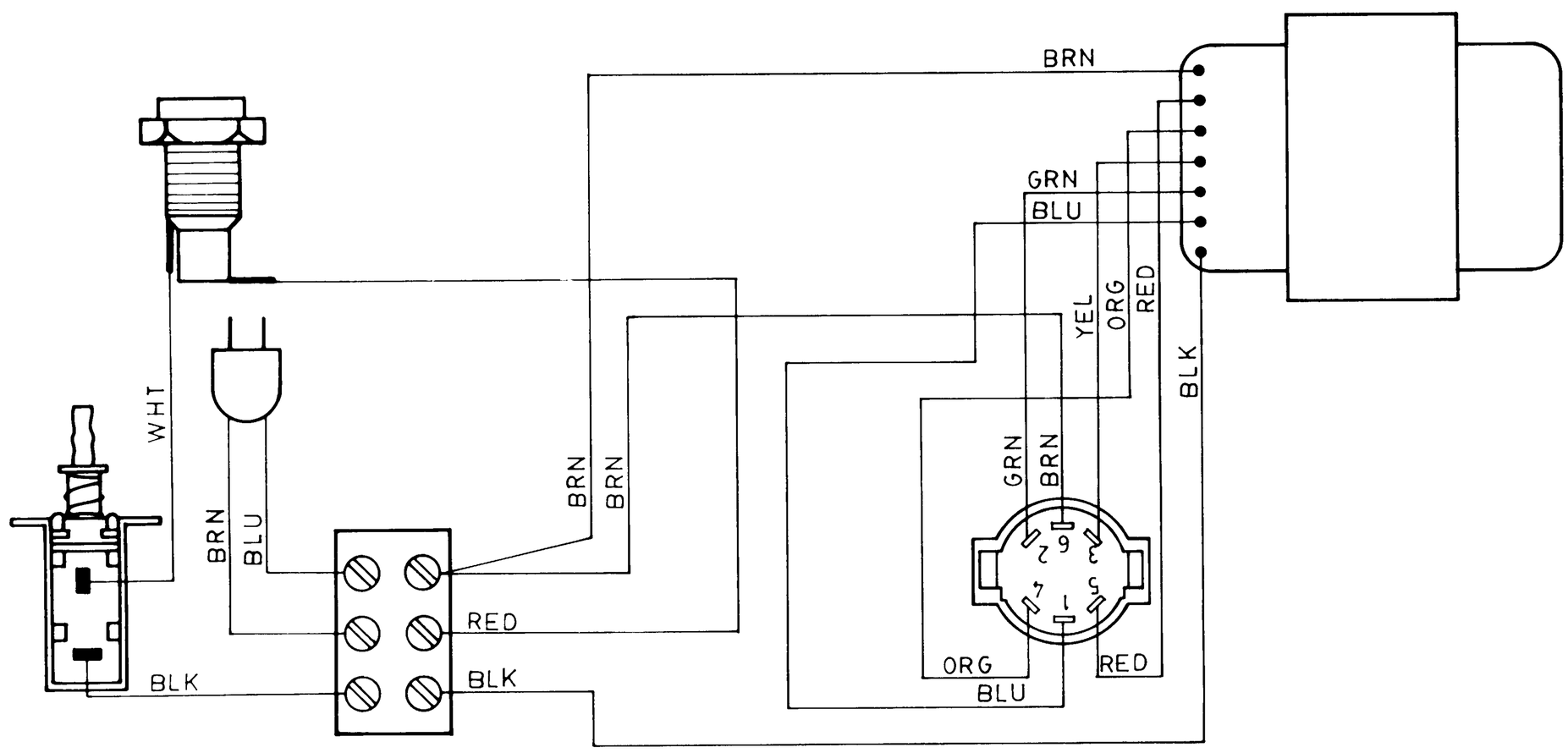

BLOCK DIAGRAM

[A, A1]-Version for U.S.A., Canada

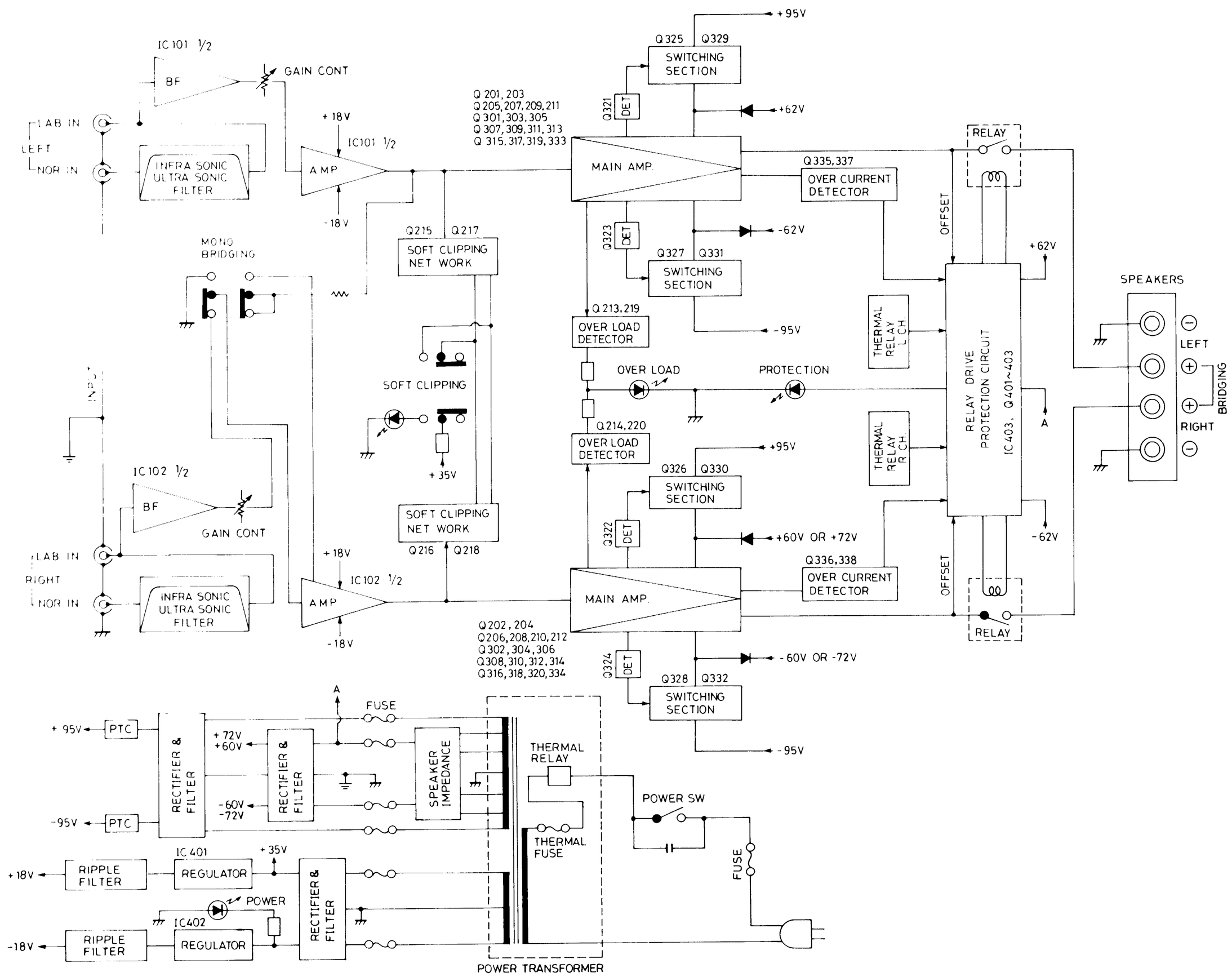

[B, B1, C, C1]-Version for U.K., Australia / N.Z., Scandinavia, W.Germany

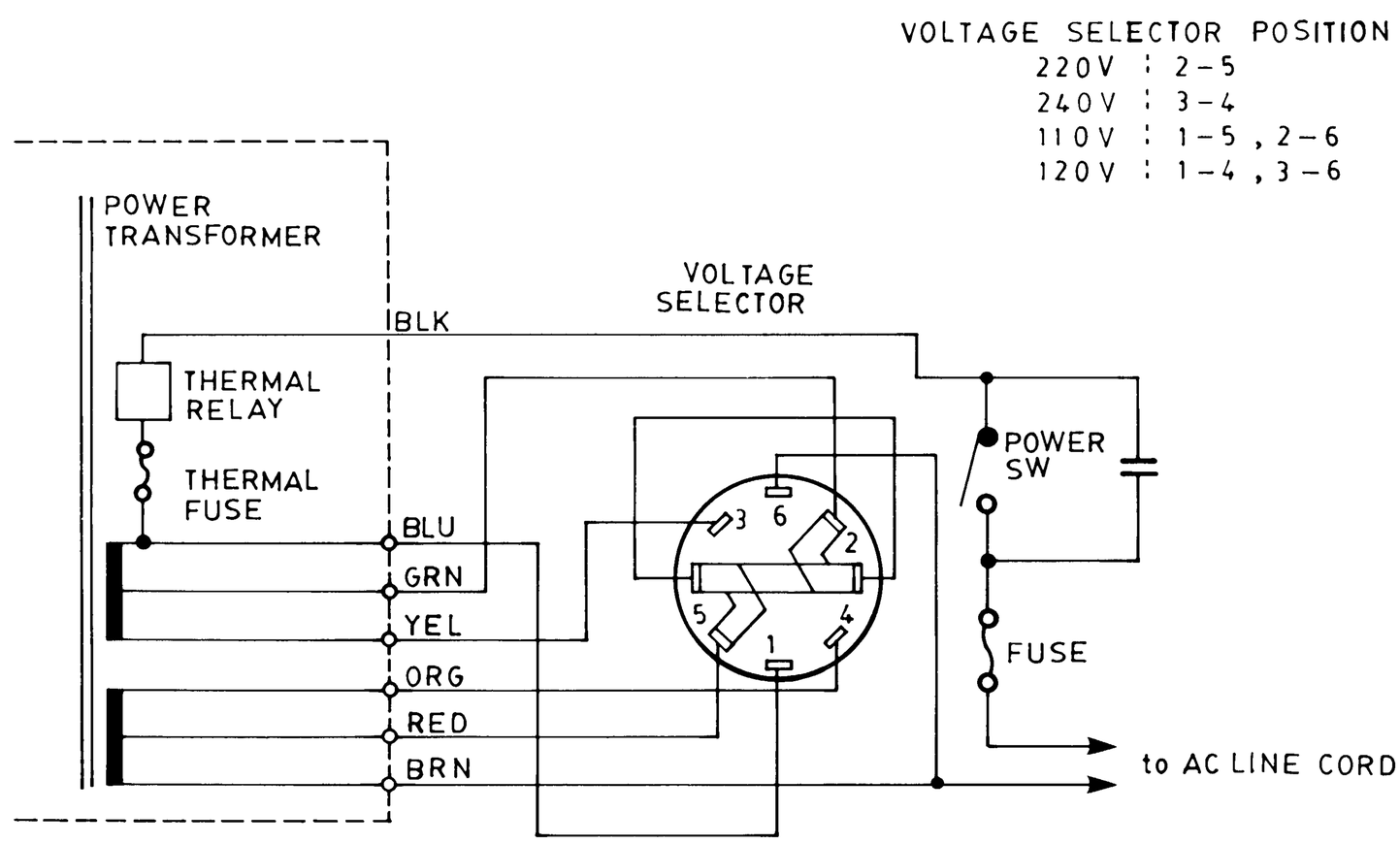

SCHEMATIC AND PCB LAYOUT (Foil side)

Power Supply/Protect P.C.B Ass'y

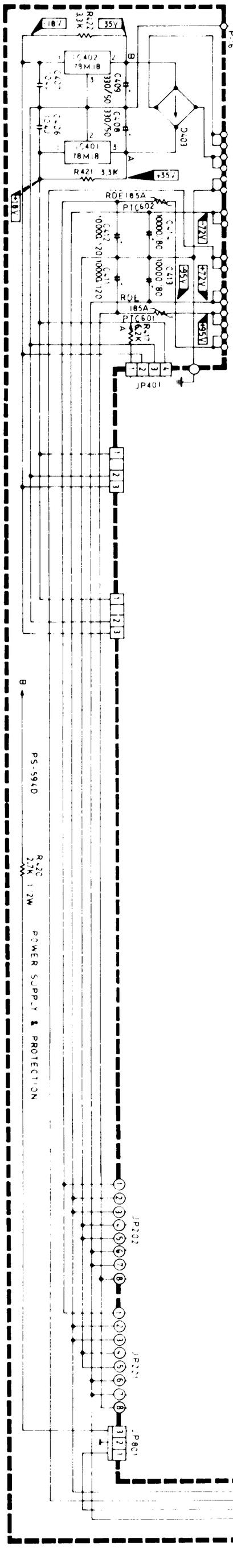

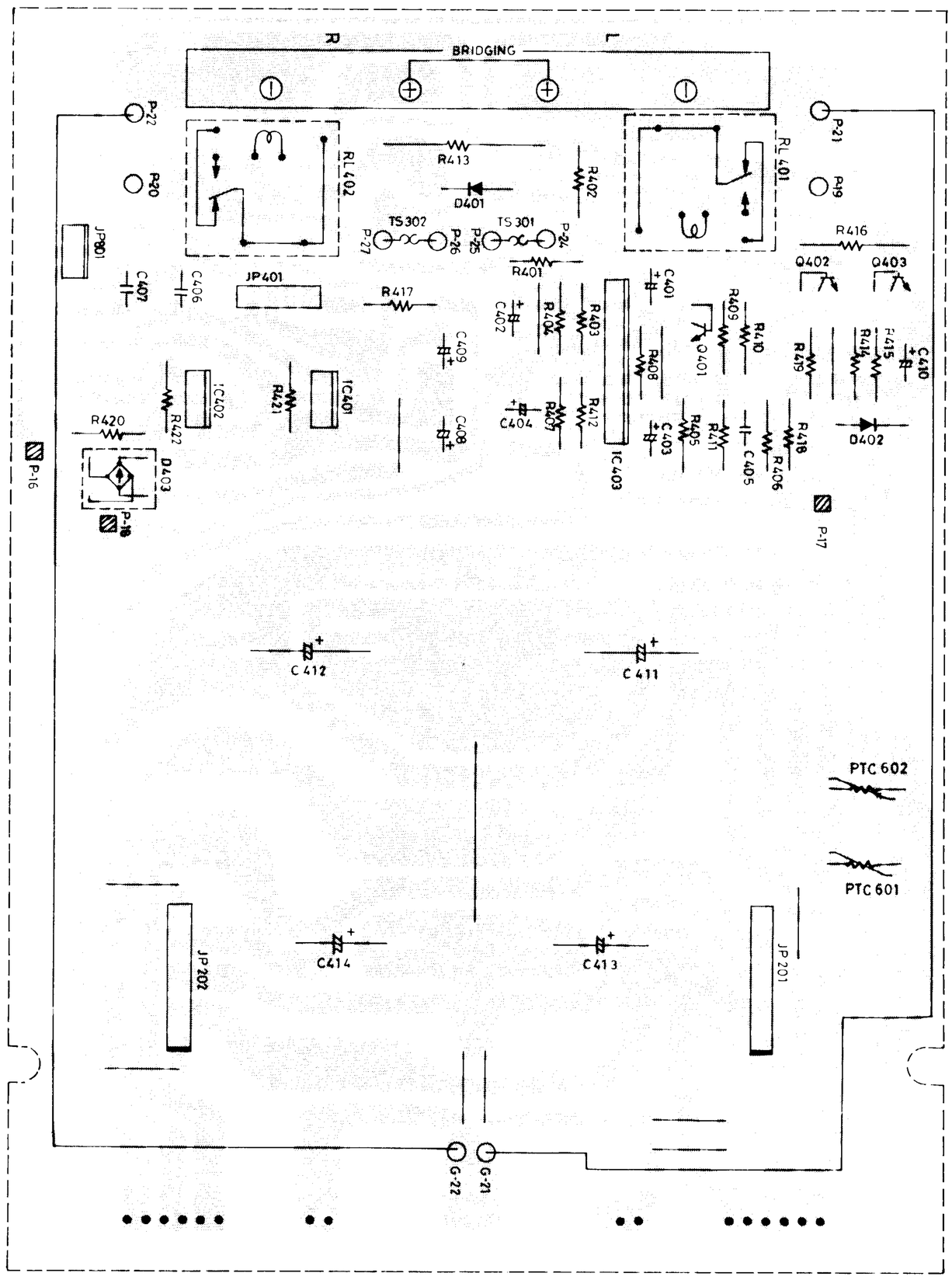

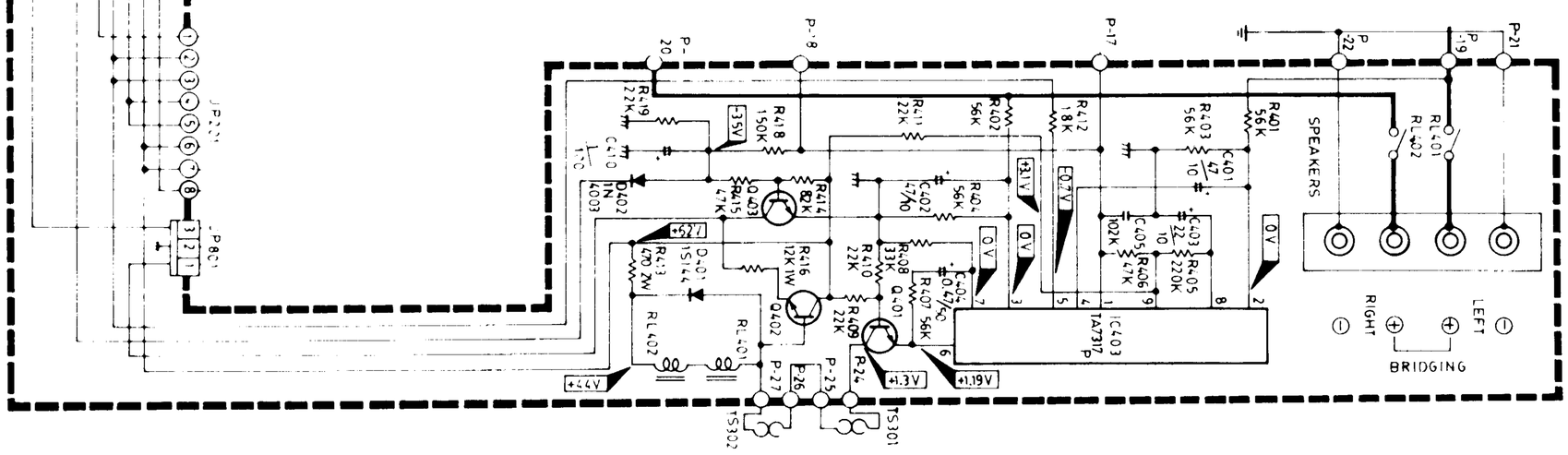

Fuse P.C.B Ass'y

[A, A1]-Version for U.S.A., Canada

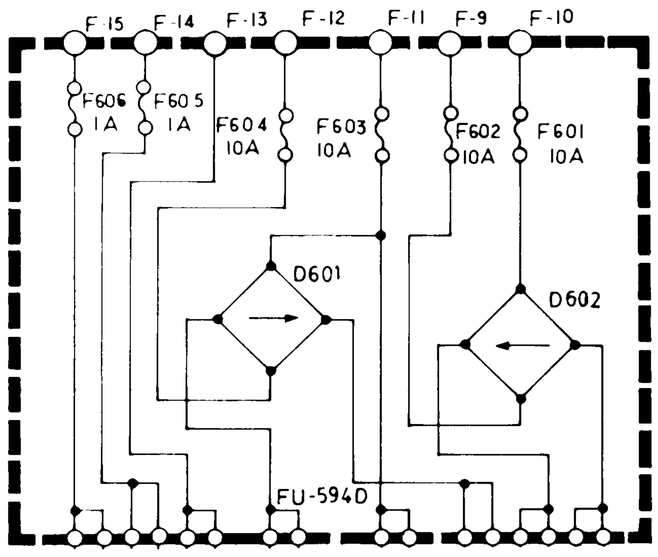

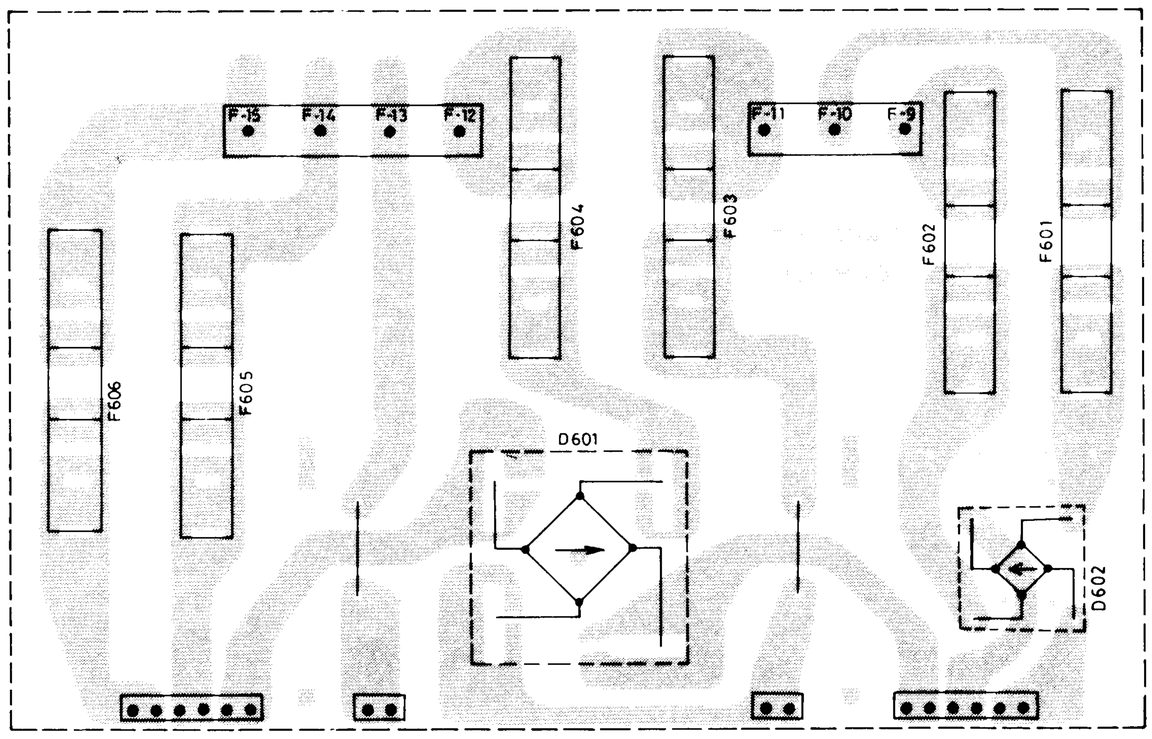

[B, B1, C, C1]-Version for U.K., Australia / N.Z., Scandinavia, W.Germany

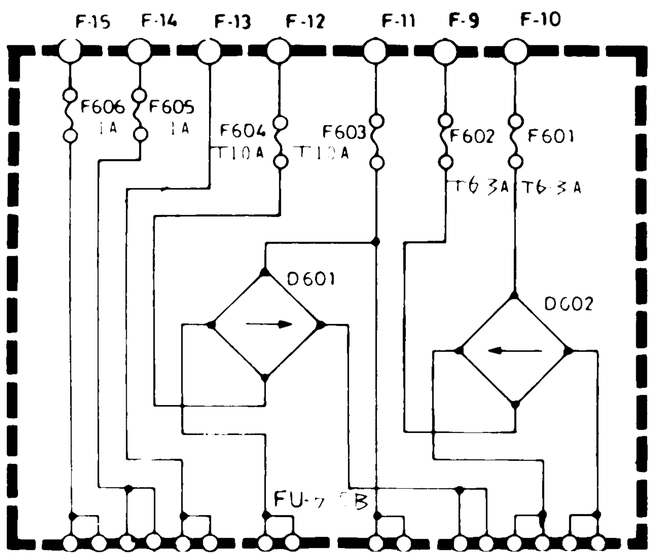

Primary Fuse P.C.B Ass'y

[A, A1]-Version for U.S.A., Canada only

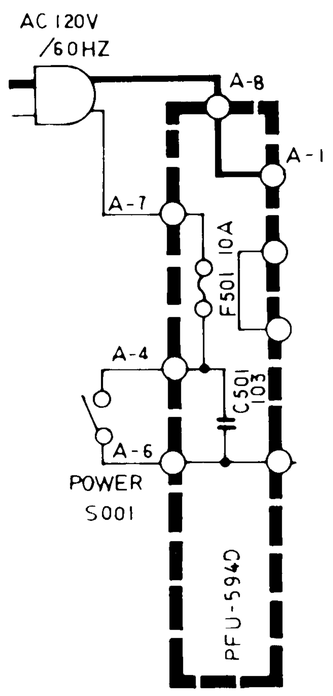

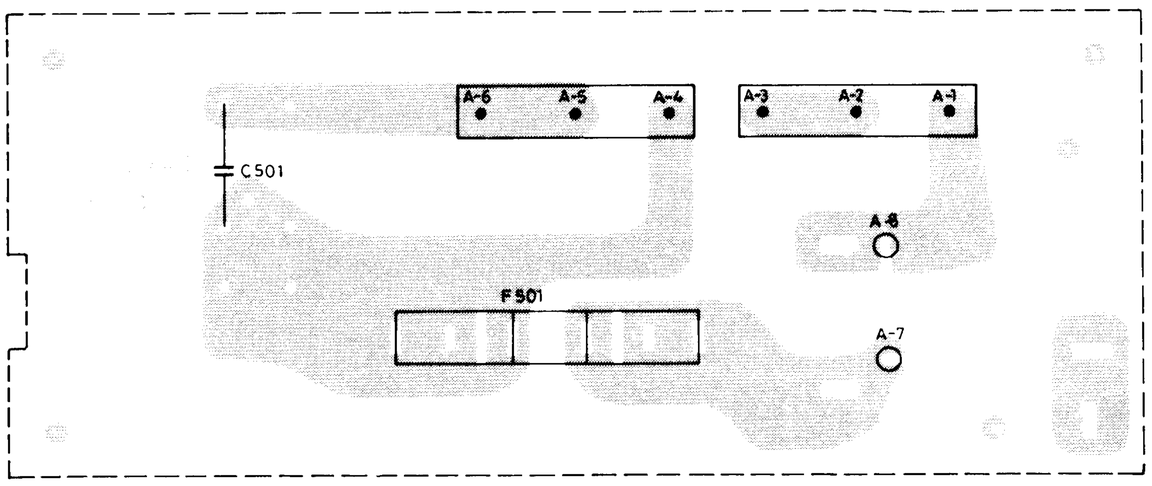

Indicator P.C.B Ass'y

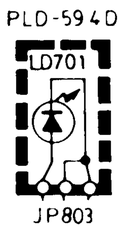

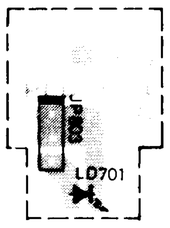

Power Indicator P.C.B Ass'y

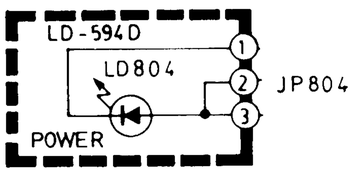

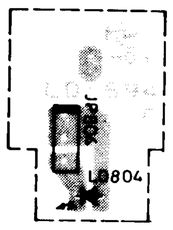

Input P.C.B Ass'y

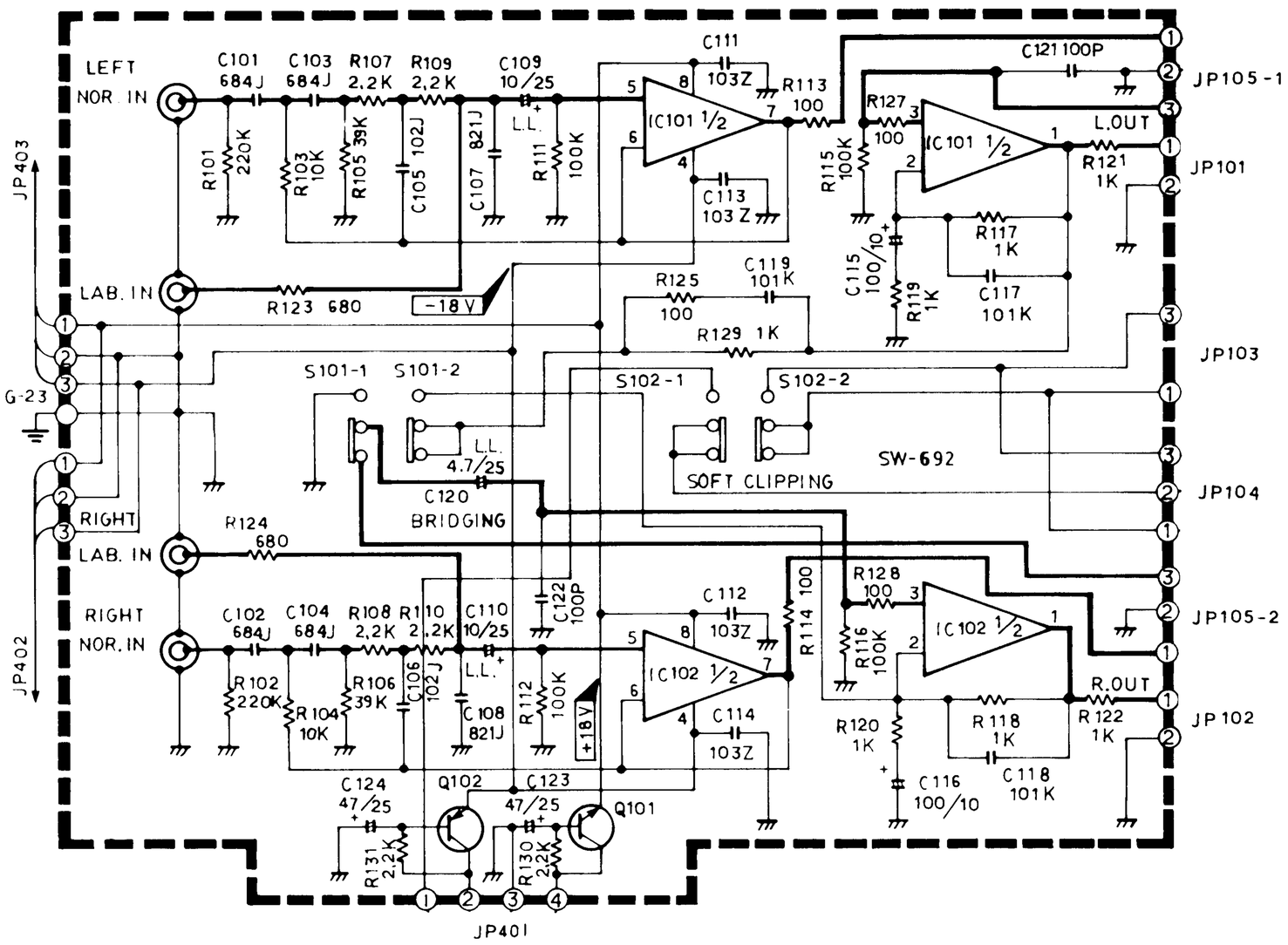

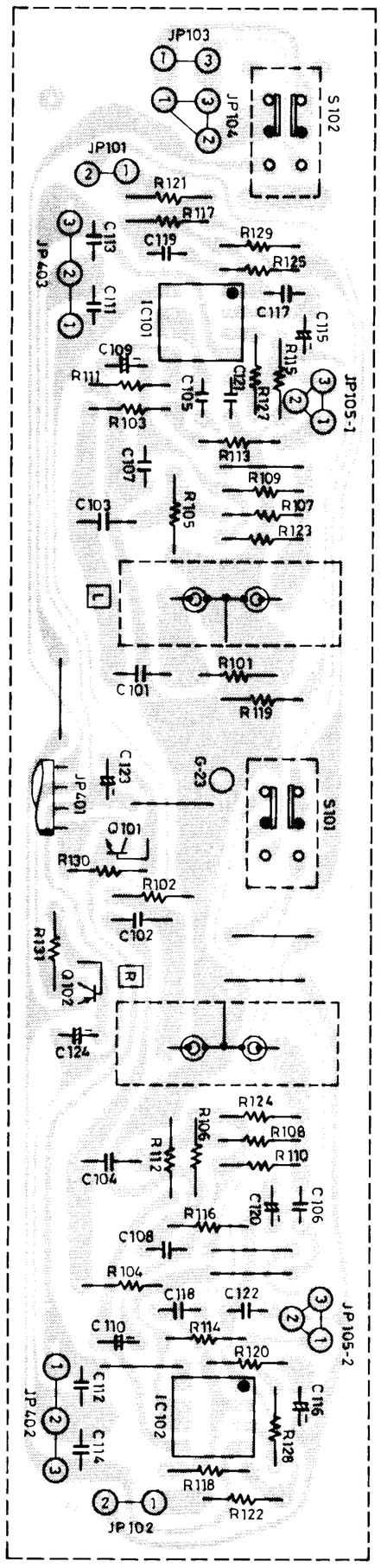

Input Volume P.C.B Ass'y

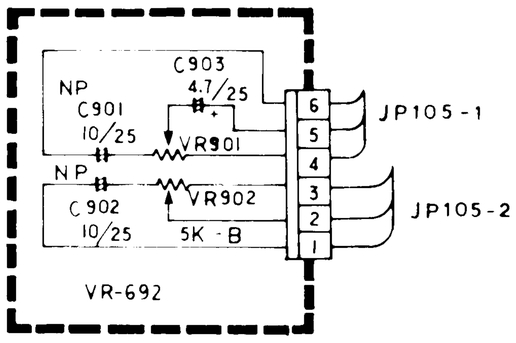

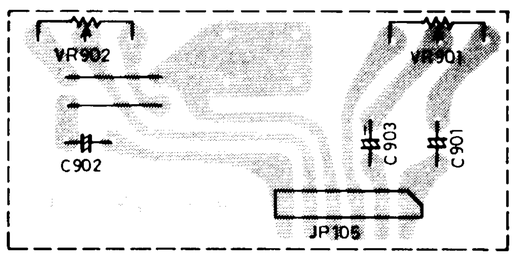

Indicators P.C.B Ass'y

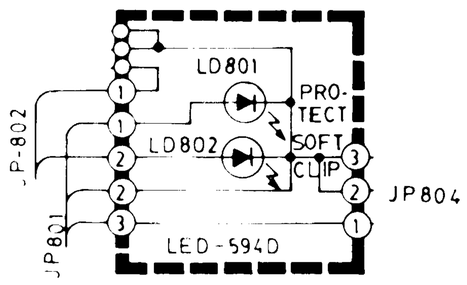

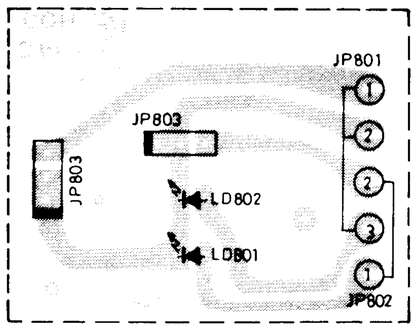

R ch Power Amp Circuit

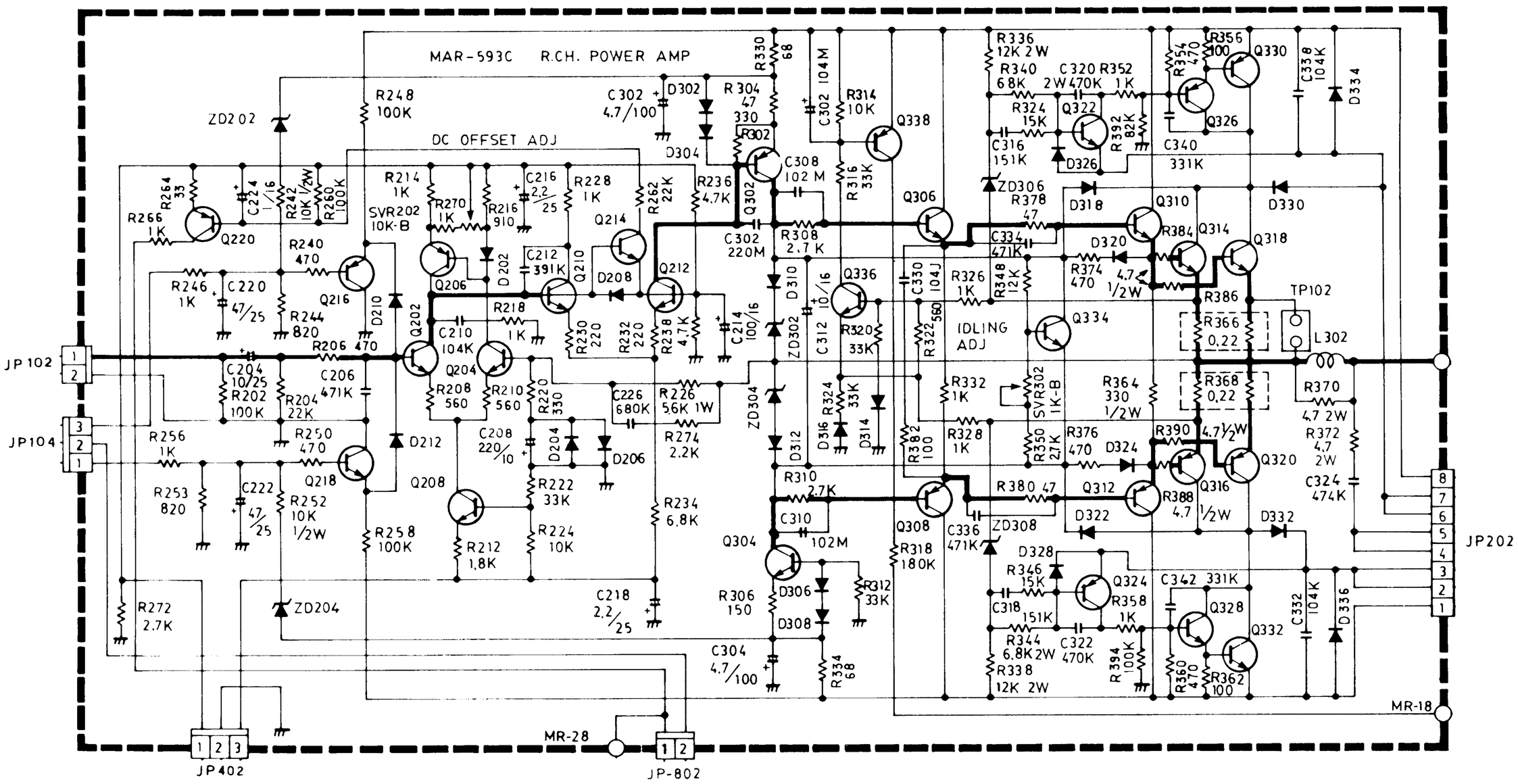

L ch Power Amp Circuit

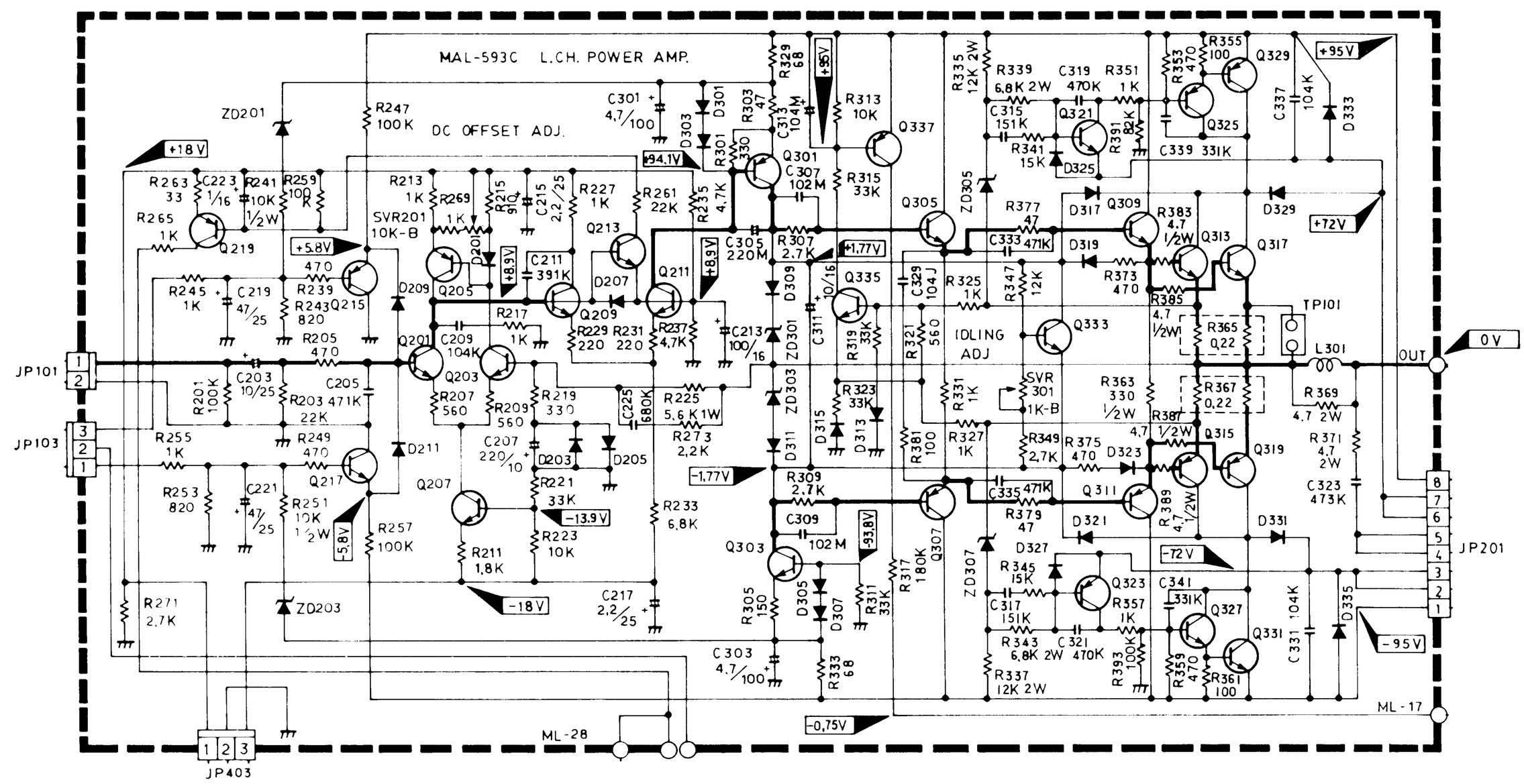

R ch Power Amp P.C.B Ass'y

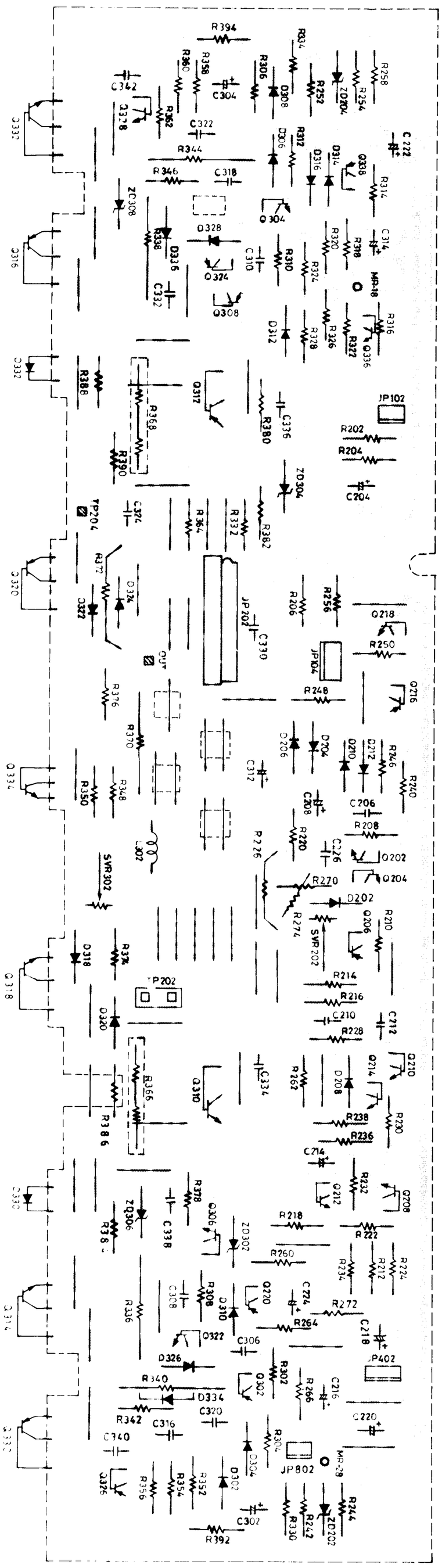

L ch Power Amp P.C.B Ass'y

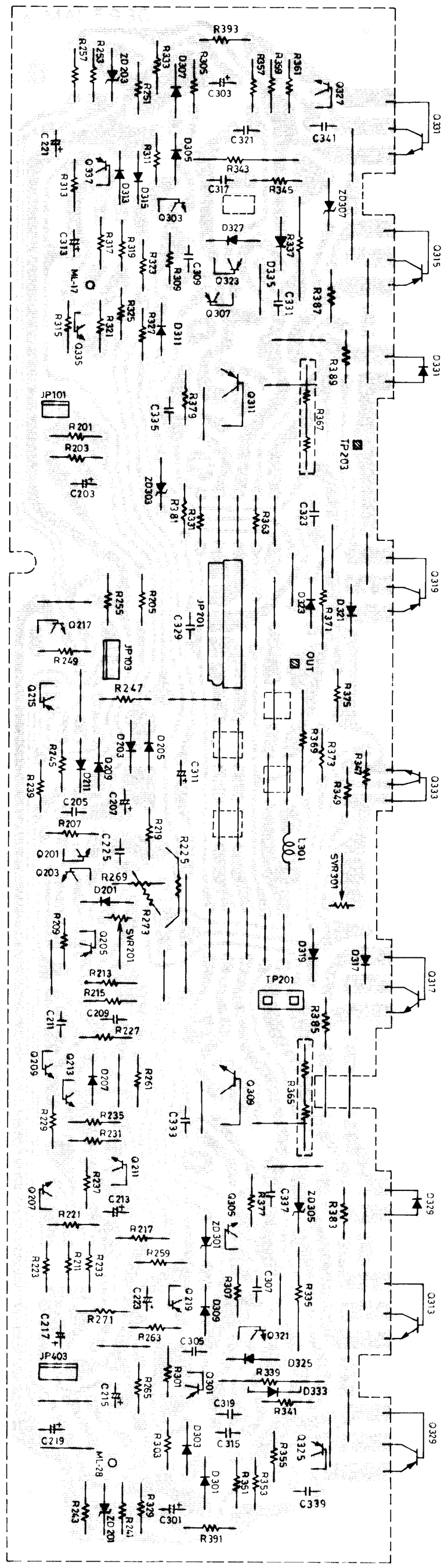

EXPLODED VIEW AND PARTS LIST

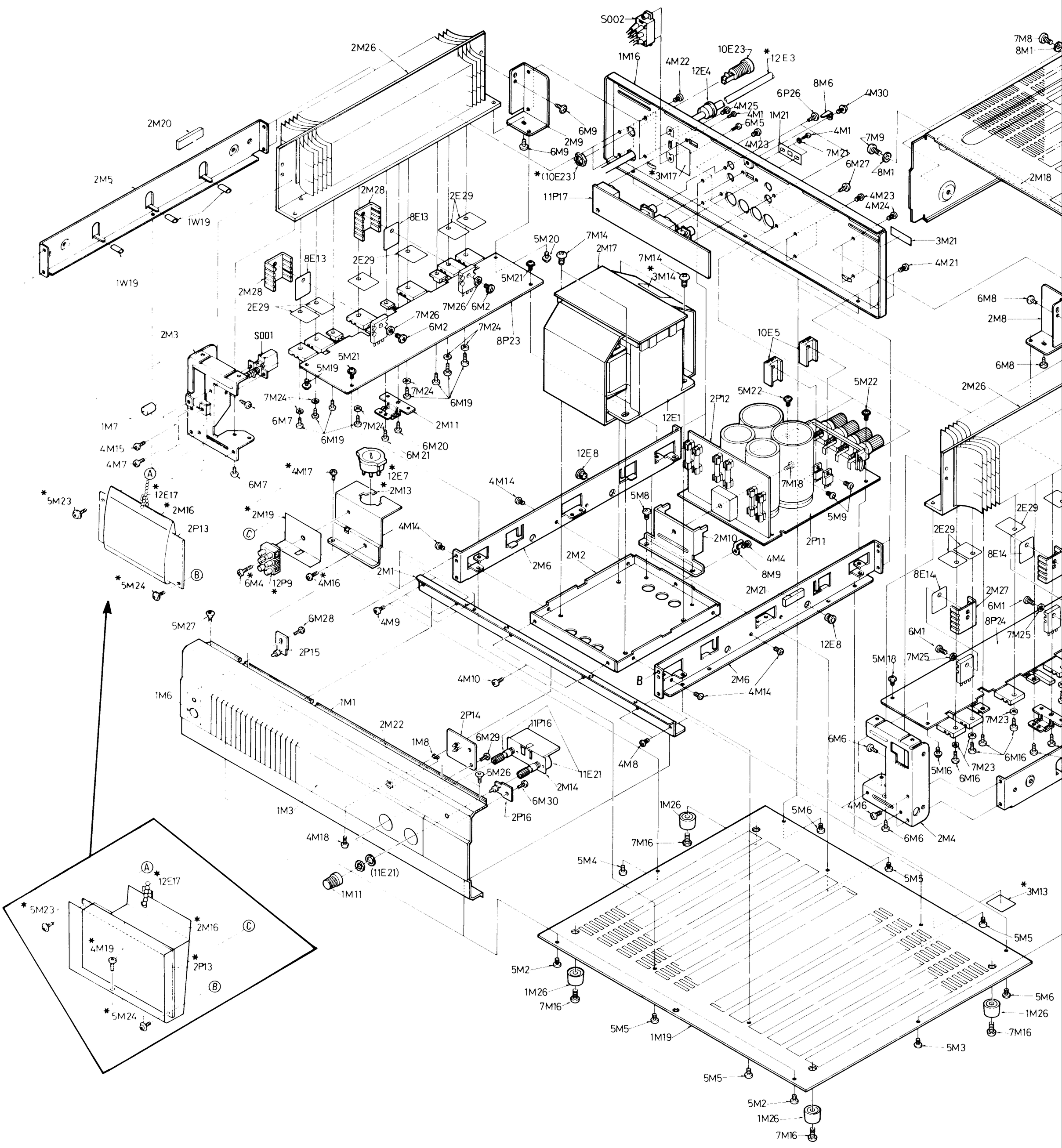

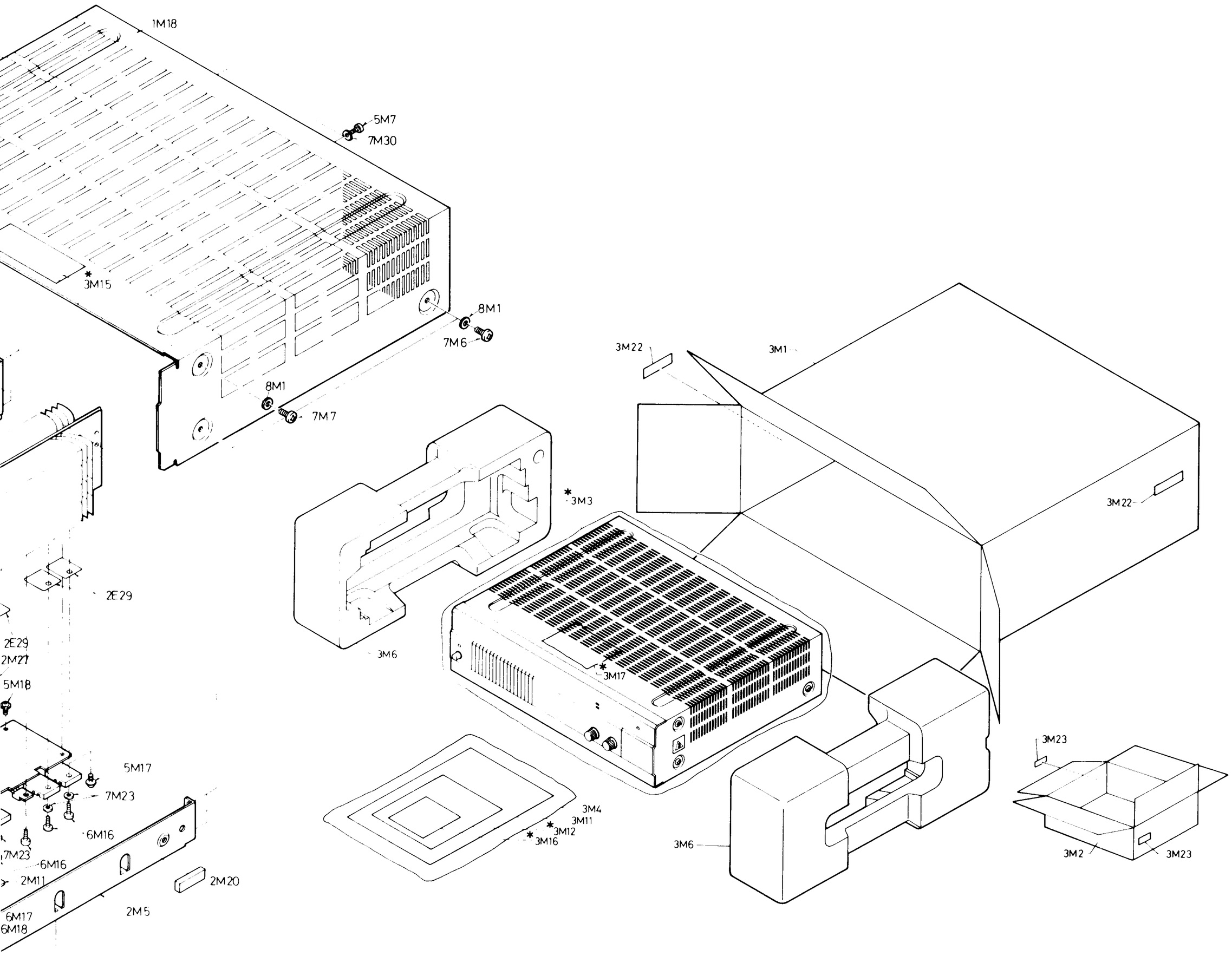

Classify Parts by Destinations

[A]-Version for U.S.A. [B]-Version for U.K. [C]-Version for Scandinavia
[A1]-Version for Canada [B1]-Version for Australia, N.Z. [C1]-Version for W.Germany

EXPLODED VIEW PARTS

Ref.No.	Description	U.S.A.	CANADA	U.K.	AUSTRALIA/N.Z.	SCANDINAVIA	W.GERMANY
1M16	REAR PANEL	N21462-1B	N21462-1B	N21480-1	N21480-1	N21480-2	N21480-2
2M13	FITTINGS (VOLTAGE SELECTOR)	-	-	N44907	N44907	N44907	N44907
2M16	SHIELD COVER	N44336	N45015	-	-	-	-
2M19	INSULATION FIBER	-	-	N44962	N44962	N44962	N44962
3M13	LABEL, SA1965(LIGHTNING FLASH)	N44043-1	N44043-1	-	-	-	-
3M14	LABEL, FUSE	N44525	N44525	-	-	-	-
3M15	LABEL, SP CAUTION	-	-	N44339A-1	N44339A-1	N44339A-1	N44339A-1
3M17	LABEL, FUSE	-	N44525	-	-	-	-
4M16,17	TAP SCREW S, BIND HEAD, Y	-	-	TSB+30X06-Y	TSB+30X06-Y	TSB+30X06-Y	TSB+30X06-Y
4M19	TAP SCREW S, BIND HEAD, Y	-	TSB+30X06-Y	-	-	-	-
5M23,24	TAP SCREW S, WASHER FACED, Y	TSC+30X08-Y	TSC+30X08-Y	-	-	-	-
6M 4	TAP SCREW S, BIND HEAD, Y	-	-	TSB+30X14-Y	TSB+30X14-Y	TSB+30X14-Y	TSB+30X14-Y
2E13	PRINTED CIRCUIT BOARD	PFU-594D	PFU-594D	-	-	-	-
10E23	FUSE HOLDER	S-N5051	S-N5051	FH-B02	FH-B02	FH-B02	FH-B02
12E 3	LINE CORD	ACC-035D5-9EK1	ACC-035D5-9EK1	ACC-037D3-9EK1	ACC-038D3-9ELA	ACC-037D3-9EK1	ACC-037D3-9EK1
12E 7	VOLTAGE SELECTOR	-	-	YKS11-0010	YKS11-0010	YKS11-0010	YKS11-0010
12E 9	TERMINAL BLOCK	-	-	N500-3DS	N500-3DS	N500-3DS	N500-3DS
12E17	CORD BAND	R164P	R164P	-	-	-	-

PACKING PARTS

Ref.No.	Description	U.S.A.	CANADA	U.K.	AUSTRALIA/N.Z.	SCANDINAVIA	W.GERMANY
3M 3	POLYETHYLENE BAG	N45011	N45011	N45012	N45011	N45011	N45011
3M12	CAUTION SHEET, POLARIZED PLUG	N44687	N44687	-	-	-	-
3M16	CARD, WARRANTY REGISTRATION	NAD-WC2	-	-	-	-	-
3M17	STICKER, WARNING	-	-	N41994	-	-	-

SCHEMATIC DIAGRAM

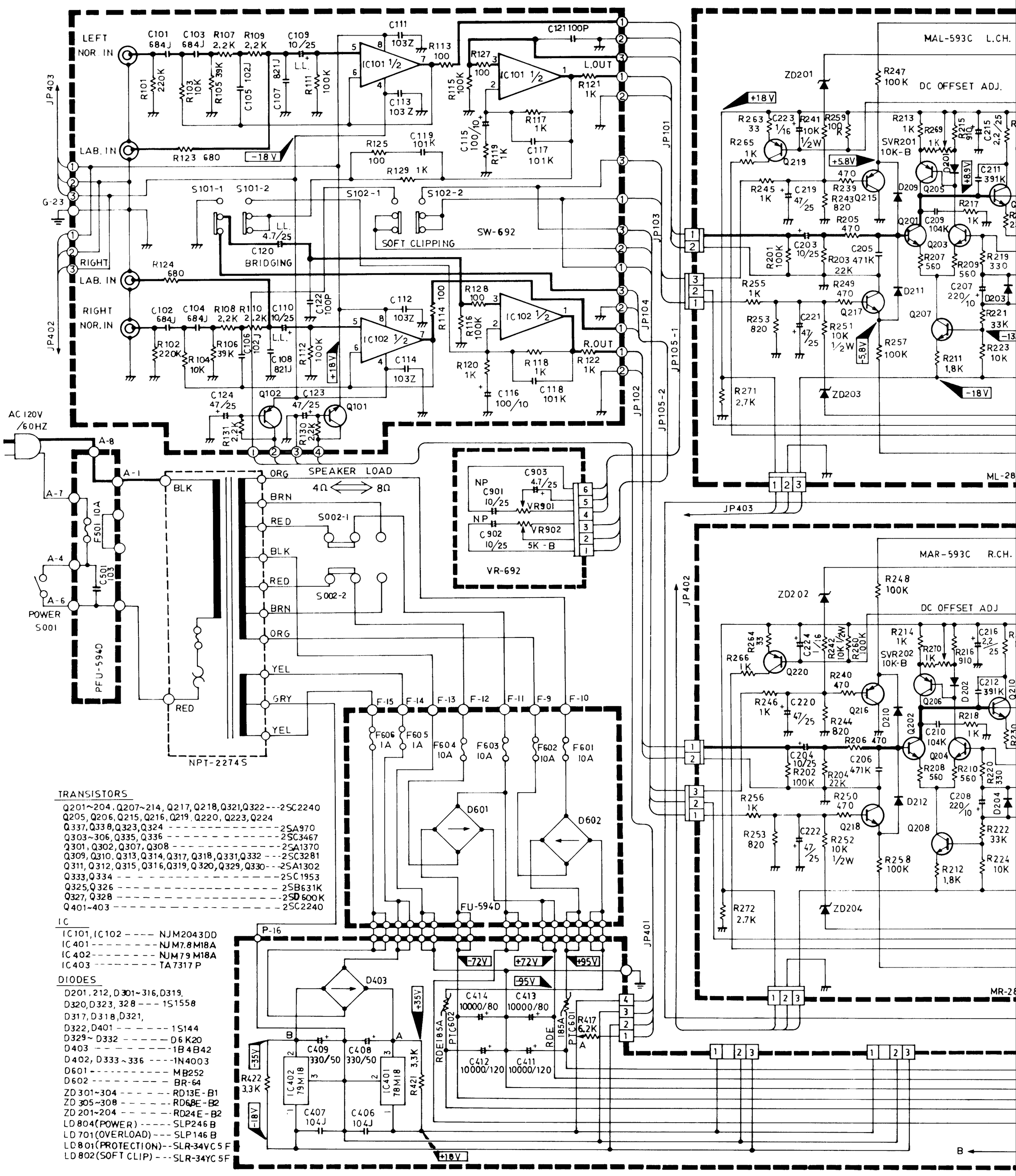

CAUTION: THOSE FUSES WITH SYMBOL MARKS 250V 1A and 250V 10A ARE FAST BLOW TYPE. REPLACE WITH SAME TYPE 10A 250V (OR 1A 250V) FUSE.

ATTENTION: LES FUSIBLES MARQUES 250V 1A ET 250V 10A SONT DE TYPE A FUSION RAPIDE. UTILISER UN FUSIBLE DE RECHANGE DE MEME TYPE DE 10A 250V (OU 1A 250V).

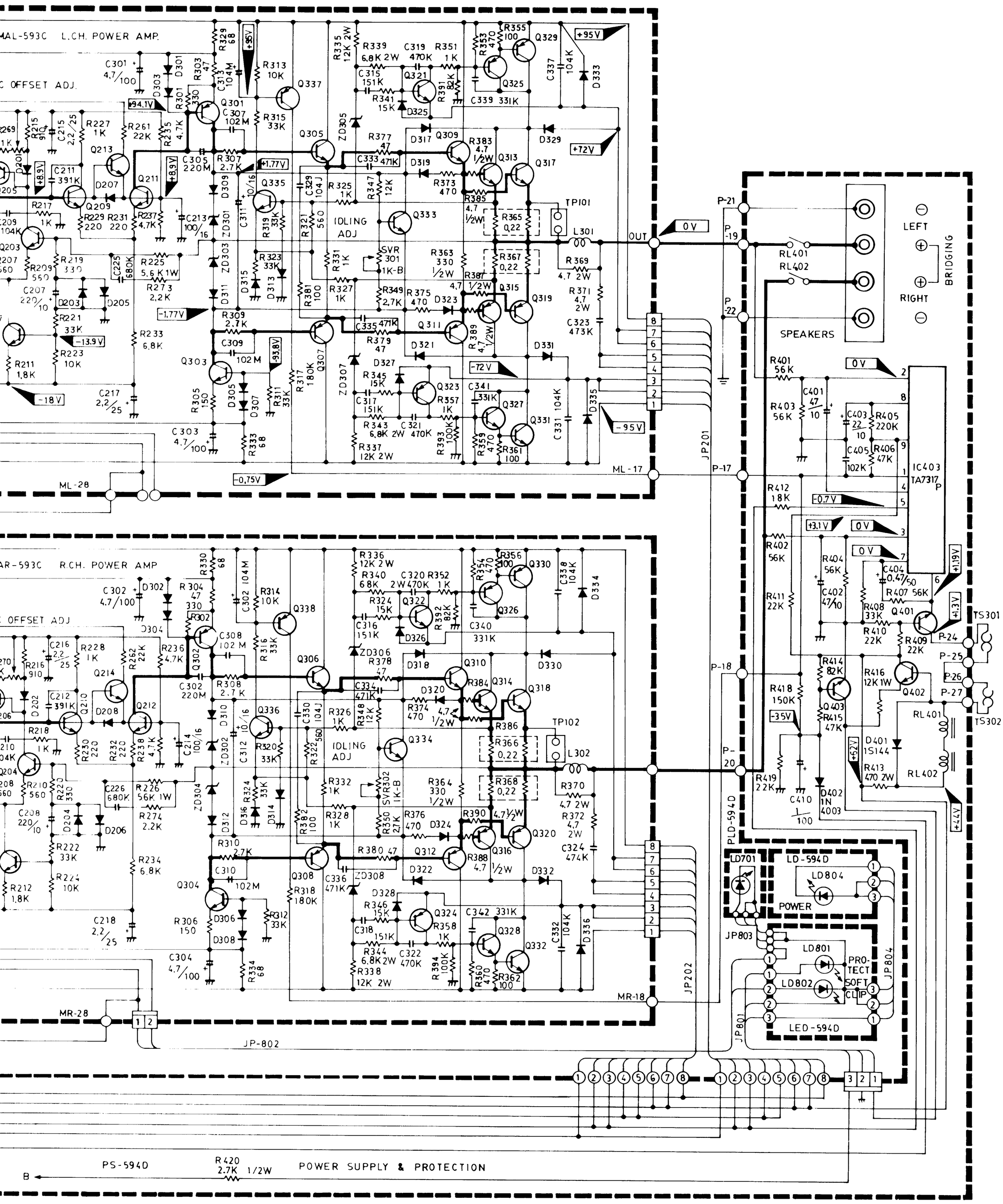

DRAWING NO.	MODEL NO.
CD-370	2600A

ELECTRICAL PARTS LIST

L CH POWER AMP PCB ASS'Y

REF. NO.	Q'TY	PART NO.	DESCRIPTION
P.C.BOARD			
8E23	1	MAL-593C	PRINTED CIRCUIT BOARD
SEMICONDUCTORS			
D201,203, 205,207, 209,211, 301,303, 305,307, 309,311, 313,315	14	1S1588	DIODE
D317	1	1SS144	DIODE
D319	1	1S1588	DIODE
D321	1	1SS144	DIODE
D323,325, 327	3	1S1588	DIODE
D333,335	2	1N4003	DIODE
Q201,203	2	2SC2240-BL	TRANSISTOR
Q205	1	2SA970-BL	TRANSISTOR
Q207,209, 211,213	4	2SC2240-BL	TRANSISTOR
Q215	1	2SA970-BL	TRANSISTOR
Q217	1	2SC2240-BL	TRANSISTOR
Q219	1	2SA970-BL	TRANSISTOR
Q301	1	2SA1370-E,F	TRANSISTOR
Q303,305	2	2SC3467-E,F	TRANSISTOR
Q307	1	2SA1370-E,F	TRANSISTOR
Q309	1	2SC3281-R,O	TRANSISTOR
Q311	1	2SA1302-R,O	TRANSISTOR
Q321	1	2SC2240-BL	TRANSISTOR
Q323	1	2SA970-BL	TRANSISTOR
Q325	1	2SB631K-E,F	TRANSISTOR
Q327	1	2SD600K-E,F	TRANSISTOR
Q335	1	2SC3467-E,F	TRANSISTOR
Q337	1	2SA970-BL	TRANSISTOR
ZD201,203	2	RD24E-B2	ZENER DIODE,1/2W,24V
ZD301,303	2	RD13E-B1	DIODE
ZD305,307	2	RD6.8E-B2	ZENER DIODE,1/2W,6.8V
CAPACITORS			
C203	1	LL-25TW100M	LOW LEAK. ELECTROLYTIC CAP.
C205	1	HE90SJSL471K	CERAMIC CAPACITOR
C207	1	NS-10TW221M	ELECTROLYTIC CAPACITOR
C209	1	ECQV1H104JZ	METALLIZED FILM CAPACITOR
C211	1	HE90SJSL391K	CERAMIC CAPACITOR
C213	1	NS-16TW101M	ELECTROLYTIC CAPACITOR
C215,217	2	NS-50TW2R2M	ELECTROLYTIC CAPACITOR
C219,221	2	NS-25TW470M	ELECTROLYTIC CAPACITOR
C223	1	NS-50TW1R0M	ELECTROLYTIC CAPACITOR
C225	1	HM60SJSL680K	CERAMIC CAPACITOR
C301,303	2	NS100TW4R7M	ELECTROLYTIC CAPACITOR
C305	1	HM60SJSH220K	CERAMIC CAPACITOR
C307,309	2	HE40SJYD102M	CERAMIC CAPACITOR
C311	1	NS-16TW100M	ELECTROLYTIC CAPACITOR
C313	1	NS-50TWR10M	ELECTROLYTIC CAPACITOR
C315,317	2	HE60SJSL151K	CERAMIC CAPACITOR
C319,321	2	HE40SJSL470K	CERAMIC CAPACITOR
C323	1	MY100VS473K	MYLAR CAPACITOR
C329,331	2	ECQV1H104JZ	METALLIZED FILM CAPACITOR
C333,335	2	HE90SJSL471K	CERAMIC CAPACITOR
C337	1	ECQV1H104JZ	METALLIZED FILM CAPACITOR
C339,341	2	HE80SJSL331K	CERAMIC CAPACITOR
RESISTORS			
R201	1	KA25ST104J	CARBON RESISTOR
R203	1	KA25ST223J	CARBON RESISTOR
R205	1	KA25ST471J	CARBON RESISTOR
R207,209	2	KA25ST561J	CARBON RESISTOR
R211	1	KA25ST182J	CARBON RESISTOR
R213	1	KA25ST102J	CARBON RESISTOR
R215	1	KA25ST911J	CARBON RESISTOR
R217	1	KA25ST102J	CARBON RESISTOR
R219	1	KA25ST331J	CARBON RESISTOR
R221	1	KA25ST333J	CARBON RESISTOR
R223	1	KA25ST103J	CARBON RESISTOR
R225	1	SA-1WT562J-LP	METAL OXIDE RESISTOR
R227	1	KA25ST102J	CARBON RESISTOR
R229,231	2	KA25ST221J	CARBON RESISTOR
R233	1	KA25ST682J	CARBON RESISTOR
R235,237	2	KA25ST472J	CARBON RESISTOR
R239	1	KA25ST471J	CARBON RESISTOR
R241	1	FR50ST103J-LP	FLAME PROOF RESISTOR
R243	1	KA25ST821J	CARBON RESISTOR
R245	1	KA25ST102J	CARBON RESISTOR
R247	1	KA25ST104J	CARBON RESISTOR
R249	1	KA25ST471J	CARBON RESISTOR
R251	1	FR50ST103J-LP	FLAME PROOF RESISTOR
R253	1	KA25ST821J	CARBON RESISTOR
R255	1	KA25ST102J	CARBON RESISTOR
R257,259	2	KA25ST104J	CARBON RESISTOR
R261	1	KA25ST223J	CARBON RESISTOR
R263	1	FR25ST330J-LP	FLAME PROOF RESISTOR
R265,269	2	KA25ST102J	CARBON RESISTOR
R271	1	KA25ST272J	CARBON RESISTOR
R273	1	FR25ST222J-LP	FLAME PROOF RESISTOR
R301	1	FR25ST331J-LP	FLAME PROOF RESISTOR
R303	1	FR25ST470J-LP	FLAME PROOF RESISTOR
R305	1	FR25ST151J-LP	FLAME PROOF RESISTOR
R307	1	FR25ST272J-LP	FLAME PROOF RESISTOR
R309	1	KA25ST272J	CARBON RESISTOR
R311	1	KA25ST333J	CARBON RESISTOR
R313	1	KA25ST103J	CARBON RESISTOR
R315	1	KA25ST333J	CARBON RESISTOR
R317	1	KA25ST184J	CARBON RESISTOR
R319	1	KA25ST333J	CARBON RESISTOR
R321	1	KA25ST561J	CARBON RESISTOR
R323	1	KA25ST333J	CARBON RESISTOR
R325,327	2	FR25ST102J-LP	FLAME PROOF RESISTOR
R329	1	FR25ST680J-LP	FLAME PROOF RESISTOR
R331	1	FR25ST102J-LP	FLAME PROOF RESISTOR
R333	1	FR25ST680J-LP	FLAME PROOF RESISTOR
R335,337	2	SA-2WT123J-LP	METAL OXIDE RESISTOR
R339	1	SA-2WT682J-LP	METAL OXIDE RESISTOR
R341	1	KA25ST153J	CARBON RESISTOR
R343	1	SA-2WT682J-LP	METAL OXIDE RESISTOR
R345	1	KA25ST153J	CARBON RESISTOR
R347	1	KA25ST123J	CARBON RESISTOR
R349	1	KA25ST272J	CARBON RESISTOR
R351	1	KA25ST102J	CARBON RESISTOR
R353	1	FR25ST471J-LP	FLAME PROOF RESISTOR
R355	1	FR25ST101J-LP	FLAME PROOF RESISTOR
R357	1	KA25ST102J	CARBON RESISTOR
R359	1	FR25ST471J-LP	FLAME PROOF RESISTOR
R361	1	FR25ST101J-LP	FLAME PROOF RESISTOR
R363	1	FR50ST331J-LP	FLAME PROOF RESISTOR
R365,367	2	MPC722R22KX2LF	CEMENT RESISTOR
R369,371	2	SA-2WT4R7J-LP	METAL OXIDE RESISTOR
R373,375	2	FR25ST471J-LP	FLAME PROOF RESISTOR
R377,379	2	FR25ST470J-LP	FLAME PROOF RESISTOR
R381	1	KA25ST101J	CARBON RESISTOR
R383,385, 387,389	4	FR50ST4R7J-LP	FLAME PROOF RESISTOR
R391	1	KA25ST823J	CARBON RESISTOR
R393	1	KA25ST104J	CARBON RESISTOR
SVR201	1	SVR-08T3B103	SEMI-VARIABLE RESISTOR
SVR301	1	SVR-08T3B102	SEMI-VARIABLE RESISTOR
COILS			
L301	1	104001	AIR-CORE COIL
MISCELLANEOUS			
1W 1	1	007S240011-C-I	SOLDER-PLATED WIRE
1W28	2	GT-M01W01	GLASS TUBE
2M28	2	SH-1230-1	HEAT SINK
6M 2	2	TSB+30X10-Y	TAP SCREW S, BIND HEAD, Y
7M26	2	2AWX0830-05-Y	PLAIN WASHER, Y
8E13	2	AC-261	MICA
8E17	1	171825-2	MICRO PLUG
8E19	2	171825-3	MICRO PLUG
8E21	2	RP-001	TERMINAL PIN
8E29	51	5E-T05	JUMP WIRE
JP201	1	W-00608	CONNECTOR
TP201	1	WO-2	TERMINAL PIN
TP203	1	IPS-1136	TERMINAL PIN

R CH POWER AMP PCB ASS'Y

REF. NO.	Q'TY	PART NO.	DESCRIPTION
P.C.BOARD			
8E24	1	MAR-593C	PRINTED CIRCUIT BOARD
SEMICONDUCTORS			
D202,204, 206,208, 210,212, 302,304, 306,308, 310,312, 314,316	14	1S1588	DIODE
D318	1	1SS144	DIODE
D320	1	1S1588	DIODE
D322	1	1SS144	DIODE
D324,326, 328	3	1S1588	DIODE
D334,336	2	1N4003	DIODE
Q202,204, 208,210, 212,214, 218	7	2SC2240-BL	TRANSISTOR
Q302	1	2SA1370-E,F	TRANSISTOR
Q304,306	2	2SC3467-E,F	TRANSISTOR
Q308	1	2SA1370-E,F	TRANSISTOR
Q310	1	2SC3281-R,O	TRANSISTOR
Q312	1	2SA1302-R,O	TRANSISTOR
Q322	1	2SC2240-BL	TRANSISTOR
Q326	1	2SB631K-E,F	TRANSISTOR
Q328	1	2SD600K-E,F	TRANSISTOR
Q336	1	2SC3467-E,F	TRANSISTOR
R206,216, 220,324, 338	5	2SA970-BL	TRANSISTOR
ZD202,204	2	RD24E-B2	ZENER DIODE,1/2W,24V
ZD302,304	2	RD13E-B1	DIODE
ZD306,308	2	RD6.8E-B2	ZENER DIODE,1/2W,6.8V

REF. NO.	Q'TY	PART NO.	DESCRIPTION
CAPACITORS			
C204	1	LL-25TW100M	LOW LEAK. ELECTROLYTIC CAP.
C206	1	HE90SJSL471K	CERAMIC CAPACITOR
C208	1	NS-10TW221M	ELECTROLYTIC CAPACITOR
C210	1	ECQV1H104JZ	METALLIZED FILM CAPACITOR
C212	1	HE90SJSL391K	CERAMIC CAPACITOR
C214	1	NS-16TW101M	ELECTROLYTIC CAPACITOR
C216,218	2	NS-50TW2R2M	ELECTROLYTIC CAPACITOR
C220,222	2	NS-25TW470M	ELECTROLYTIC CAPACITOR
C224	1	NS-50TW1R0M	ELECTROLYTIC CAPACITOR
C226	1	HM60SJSL680K	CERAMIC CAPACITOR
C302,304	2	NS100TW4R7M	ELECTROLYTIC CAPACITOR
C306	1	HM60SJSH220K	CERAMIC CAPACITOR
C308,310	2	HE40SJYD102M	CERAMIC CAPACITOR
C312	1	NS-16TW100M	ELECTROLYTIC CAPACITOR
C314	1	NS-50TWR10M	ELECTROLYTIC CAPACITOR
C316,318	2	HE60SJSL151K	CERAMIC CAPACITOR
C320,322	2	HE40SJSL470K	CERAMIC CAPACITOR
C324	1	MY100VS473K	MYLAR CAPACITOR
C330,332	2	ECQV1H104JZ	METALLIZED FILM CAPACITOR
C334,336	2	HE90SJSL471K	CERAMIC CAPACITOR
C338	1	ECQV1H104JZ	METALLIZED FILM CAPACITOR
C340,342	2	HE80SJSL331K	CERAMIC CAPACITOR
RESISTORS			
R202	1	KA25ST104J	CARBON RESISTOR
R204	1	KA25ST223J	CARBON RESISTOR
R206	1	KA25ST471J	CARBON RESISTOR
R208,210	2	KA25ST561J	CARBON RESISTOR
R212	1	KA25ST182J	CARBON RESISTOR
R214	1	KA25ST102J	CARBON RESISTOR
R216	1	KA25ST911J	CARBON RESISTOR
R218	1	KA25ST102J	CARBON RESISTOR
R220	1	KA25ST331J	CARBON RESISTOR
R222	1	KA25ST333J	CARBON RESISTOR
R224	1	KA25ST103J	CARBON RESISTOR
R226	1	SA-1WT562J-LP	METAL OXIDE RESISTOR
R228	1	KA25ST102J	CARBON RESISTOR
R230,232	2	KA25ST221J	CARBON RESISTOR
R234	1	KA25ST682J	CARBON RESISTOR
R236,238	2	KA25ST472J	CARBON RESISTOR
R240	1	KA25ST471J	CARBON RESISTOR
R242	1	FR50ST103J-LP	FLAME PROOF RESISTOR
R244	1	KA25ST821J	CARBON RESISTOR
R246	1	KA25ST102J	CARBON RESISTOR
R248	1	KA25ST104J	CARBON RESISTOR
R250	1	KA25ST471J	CARBON RESISTOR
R252	1	FR50ST103J-LP	FLAME PROOF RESISTOR
R254	1	KA25ST821J	CARBON RESISTOR
R256	1	KA25ST102J	CARBON RESISTOR
R258,260	2	KA25ST104J	CARBON RESISTOR
R262	1	KA25ST223J	CARBON RESISTOR
R264	1	FR25ST330J-LP	FLAME PROOF RESISTOR
R266,270	2	KA25ST102J	CARBON RESISTOR
R272	1	KA25ST272J	CARBON RESISTOR
R274	1	FR25ST222J-LP	FLAME PROOF RESISTOR
R302	1	FR25ST331J-LP	FLAME PROOF RESISTOR
R304	1	FR25ST470J-LP	FLAME PROOF RESISTOR
R306	1	FR25ST151J-LP	FLAME PROOF RESISTOR
R308	1	FR25ST272J-LP	FLAME PROOF RESISTOR
R310	1	KA25ST272J	CARBON RESISTOR
R312	1	KA25ST333J	CARBON RESISTOR
R314	1	KA25ST103J	CARBON RESISTOR
R316	1	KA25ST333J	CARBON RESISTOR
R318	1	KA25ST184J	CARBON RESISTOR
R320	1	KA25ST333J	CARBON RESISTOR
R322	1	KA25ST561J	CARBON RESISTOR
R324	1	KA25ST333J	CARBON RESISTOR
R326,328	2	FR25ST102J-LP	FLAME PROOF RESISTOR
R330	1	FR25ST680J-LP	FLAME PROOF RESISTOR
R332	1	FR25ST102J-LP	FLAME PROOF RESISTOR
R334	1	FR25ST680J-LP	FLAME PROOF RESISTOR
R336,338	2	SA-2WT123J-LP	METAL OXIDE RESISTOR
R340	1	SA-2WT682J-LP	METAL OXIDE RESISTOR
R342	1	KA25ST153J	CARBON RESISTOR
R344	1	SA-2WT682J-LP	METAL OXIDE RESISTOR
R346	1	KA25ST153J	CARBON RESISTOR
R348	1	KA25ST123J	CARBON RESISTOR
R350	1	KA25ST272J	CARBON RESISTOR
R352	1	KA25ST102J	CARBON RESISTOR
R354	1	FR25ST471J-LP	FLAME PROOF RESISTOR
R356	1	FR25ST101J-LP	FLAME PROOF RESISTOR
R358	1	KA25ST102J	CARBON RESISTOR
R360	1	FR25ST471J-LP	FLAME PROOF RESISTOR
R362	1	FR25ST101J-LP	FLAME PROOF RESISTOR
R364	1	FR50ST331J-LP	FLAME PROOF RESISTOR
R366,368	2	MPC722R22KX2LF	CEMENT RESISTOR
R370,372	2	SA-2WT4R7J-LP	METAL OXIDE RESISTOR
R374,376	2	FR25ST471J-LP	FLAME PROOF RESISTOR
R378,380	2	FR25ST470J-LP	FLAME PROOF RESISTOR
R382	1	KA25ST101J	CARBON RESISTOR
R384,386, 388,390	4	FR50ST4R7J-LP	FLAME PROOF RESISTOR
R392	1	KA25ST823J	CARBON RESISTOR
R394	1	KA25ST104J	CARBON RESISTOR
SVR202	1	SVR-08T3B103	SEMI-VARIABLE RESISTOR
SVR302	1	SVR-08T3B102	SEMI-VARIABLE RESISTOR
COILS			
L302	1	104001	AIR-CORE COIL

REF. NO.	Q'TY	PART NO.	DESCRIPTION
MISCELLANEOUS			
1W 2	1	007S240011-C-I	SOLDER-PLATED WIRE
1W 4	1	007S240N30-C-I	SOLDER-PLATED WIRE
2M27	2	SH-1230-1	HEAT SINK
6M 1	2	TSB+30X10-Y	TAP SCREW S, BIND HEAD, Y
7M25	2	2AWX0830-05-Y	PLAIN WASHER, Y
8E14	2	AC-261	MICA
8E18	2	171825-2	MICRO PLUG
8E20	2	171825-3	MICRO PLUG
8E22	1	RP-001	TERMINAL PIN
8E30	54	5E-T05	JUMP WIRE
JP202	1	W-D0608	CONNECTOR
TP202	1	WD-2	TERMINAL PIN
TP204	1	IPS-1136	TERMINAL PIN

POWER SUPPLY/PROTECT PCB ASS'Y

REF. NO.	Q'TY	PART NO.	DESCRIPTION
P.C.BOARD			
2E11	1	PS-594D	PRINTED CIRCUIT BOARD
SEMICONDUCTORS			
D401	1	1SS144	DIODE
D402	1	1N4003	DIODE
D403	1	1S4B42	DIODE
Q401~403	3	2SC2240-GR,BL	TRANSISTOR
IC401	1	NJM78M18A	IC
IC402	1	NJM79M18A	IC
IC403	1	TA7317P	IC
CAPACITORS			
C401,402	2	NS-10TW470M-KF	ELECTROLYTIC CAPACITOR
C403	1	NS-10TW220M-KF	ELECTROLYTIC CAPACITOR
C404	1	NS-50TWR47M-KF	ELECTROLYTIC CAPACITOR
C405	1	MY-50VU102K-KF	MYLAR CAPACITOR
C406,407	2	ECQV1H104JZ-KF	METALIZED FILM CAPACITOR
C408,409	2	NS-50TW331M-KF	ELECTROLYTIC CAPACITOR
C410	1	MS100TW1R0M-KF	ELECTROLYTIC CAPACITOR
C411,412	2	BC0A103MI80EE3	ELECTROLYTIC CAPACITOR
C413,414	2	BC80103MC80EE4	ELECTROLYTIC CAPACITOR
RESISTORS			
R401~404	4	KA25ST563J	CARBON RESISTOR
R405	1	KA25ST224J	CARBON RESISTOR
R406	1	KA25ST473J	CARBON RESISTOR
R407	1	KA25ST563J	CARBON RESISTOR
R408	1	KA25ST333J	CARBON RESISTOR
R409~411	3	KA25ST223J	CARBON RESISTOR
R412	1	KA25ST183J	CARBON RESISTOR
R413	1	SA-2WT471J-LP	METAL OXIDE RESISTOR
R414	1	KA25ST823J	CARBON RESISTOR
R415	1	KA25ST473J	CARBON RESISTOR
R416	1	SA-1WT123J-LP	METAL OXIDE RESISTOR
R417	1	KA25ST622J	CARBON RESISTOR
R418	1	KA25ST154J	CARBON RESISTOR
R419	1	KA25ST223J	CARBON RESISTOR
R420	1	KA50XT272J	CARBON RESISTOR
R421,422	2	KA25ST332J	CARBON RESISTOR
MISCELLANEOUS			
1W 5	1	007S240B04-J-J	SOLDER-PLATED WIRE
1W 9	2	007Y180B25-C-C	SOLDER-PLATED WIRE
1W10	1	007Y180R27-C-E	TWISTED WIRE
1W11	1	007Y180W27-C-E	TWISTED WIRE
1W14	2	468S248B15-J-Z	8-LEAD, FLAT CABLE
5M 9	2	TSB+30X08-B	TAP SCREW S, BIND HEAD, B
JP401	1	W-D0604	CONNECTOR
RL401,402	2	PXS-2405U	RELAY
10E 3	3	RP-001	TERMINAL PIN
10E 5	2	SE-25-BSB	HEAT SINK
10E12	1	171825-3	MICRO PLUG
10E17	11	5E-T05	JUMP WIRE
10E19	1	YKD31-0212	SOCKET 4P (S.P)
PTC601,602	2	RDE185A	P.T.C

FUSE PCB ASS'Y

REF. NO.	Q'TY	PART NO.	DESCRIPTION
P.C.BOARD			
2E12	1	FU-594D	PRINTED CIRCUIT BOARD
SEMICONDUCTORS			
D601	1	MB252	DIODE
D602	1	BR-64-LF	DIODE
MISCELLANEOUS			
F601~604	4	FU-621034T	FUSE
F605,606	2	FU-621024T	FUSE
2M10	1	N44234B	HEAT SINK
7M18	1	TSB+40X16-Y	TAP SCREW S, BIND HEAD, Y
11E 1	12	S-N5051	FUSE HOLDER
11E 9	2	IMSA-1068-06D	MINI TERMINAL PLATE
11E10	2	IMSA-1068-02D	MINI TERMINAL PLATE
11E11	1	WB-3	TERMINAL PIN
11E12	1	WB-4	TERMINAL PIN
11E13	2	5E-T05	JUMP WIRE

PRIMARY FUSE PCB ASS'Y

REF. NO.	Q'TY	PART NO.	DESCRIPTION
P.C.BOARD			
2E13	1	PFU-594D	PRINTED CIRCUIT BOARD
CAPACITORS			
C501	1	ECQU1A103MH	METALLIZED FILM CAPACITOR
MISCELLANEOUS			
F501	1	FU-621034T-C	FUSE
10E23	2	S-N5051	FUSE HOLDER
10E25	2	WC-3	TERMINAL PIN

INDICATORS PCB ASS'Y

REF. NO.	Q'TY	PART NO.	DESCRIPTION
P.C.BOARD			
2E14	1	LED-594D	PRINTED CIRCUIT BOARD
SEMICONDUCTORS			
LD801	1	SLR-34VC5F	LED
LD802	1	SLR-34YC5F	LED
MISCELLANEOUS			
1W15	1	468S263331-J-J	3-LEAD, FLAT CABLE
1W16	1	468S263B14-J-J	3-LEAD, FLAT CABLE
JP801	1	MC03-538	MICRO SOCKET ASS'Y
JP802	1	MC02-539	MICRO SOCKET ASS'Y

POWER INDICATOR PCB ASS'Y

REF. NO.	Q'TY	PART NO.	DESCRIPTION
P.C.BOARD			
2E15	1	LD-594D	PRINTED CIRCUIT BOARD
SEMICONDUCTORS			
LD804	1	SLP246B	LED

INDICATOR PCB ASS'Y

REF. NO.	Q'TY	PART NO.	DESCRIPTION
P.C.BOARD			
2E16	1	PLD-594D	PRINTED CIRCUIT BOARD
SEMICONDUCTORS			
LD701	1	SLP146B	LED

INPUT VOLUME PCB ASS'Y

REF. NO.	Q'TY	PART NO.	DESCRIPTION
P.C.BOARD			
11E16	1	VR-692	PRINTED CIRCUIT BOARD
CAPACITORS			
C901,902	2	NP-25TW100M	ELECTROLYTIC CAPACITOR
C903	1	LL-25TW4R7M	LOW LEAK. ELECTROLYTIC CAP.
RESISTORS			
VR901,902	2	V8V16-502B10K6	ROTARY POTENTIONMETER
MISCELLANEOUS			
2M14	1	N44964	GND PLATE
11E19	1	171826-6	MICRO PLUG
11E27	2	5E-T05	JUMP WIRE

INPUT PCB ASS'Y

REF. NO.	Q'TY	PART NO.	DESCRIPTION
P.C.BOARD			
11E17	1	SW-692	PRINTED CIRCUIT BOARD
SEMICONDUCTORS			
Q101	1	2SC2240-GR	TRANSISTOR
Q102	1	2SA970-GR	TRANSISTOR
IC101,102	2	NJM2043DD	IC
CAPACITORS			
C101~104	4	ECQV1H684JZ-KF	METALIZED FILM CAPACITOR
C105,106	2	MY-50VU102J	MYLAR CAPACITOR
C107,108	2	HE12SJSL821J	CERAMIC CAPACITOR
C109,110	2	LL-25TW100M	LOW LEAK. ELECTROLYTIC CAP.
C111~114	4	HE70SJYF103Z	CERAMIC CAPACITOR
C115,116	2	NS-10TW101M	ELECTROLYTIC CAPACITOR
C117~119	3	HE50SJSL101K	CERAMIC CAPACITOR
C120	1	LL-25TW4R7M	LOW LEAK. ELECTROLYTIC CAP.
C121,122	2	HE50SJSL101K	CERAMIC CAPACITOR
C123,124	2	NS-25TW470M	ELECTROLYTIC CAPACITOR
RESISTORS			
R101,102	2	KA25ST224J	CARBON RESISTOR
R103,104	2	KA25ST103J	CARBON RESISTOR
R105,106	2	KA25ST393J	CARBON RESISTOR
R107~110	4	KA25ST222J	CARBON RESISTOR
R111,112	2	KA25ST104J	CARBON RESISTOR
R113,114	2	KA25ST101J	CARBON RESISTOR
R115,116	2	KA25ST104J	CARBON RESISTOR
R117~122	6	KA25ST102J	CARBON RESISTOR
R123,124	2	KA25ST681J	CARBON RESISTOR
R125,127, 128	3	KA25ST101J	CARBON RESISTOR
R129	1	KA25ST102J	CARBON RESISTOR
R130,131	2	KA25ST222J	CARBON RESISTOR
SWITCHES			
S101,102	2	SSB022	SLIDE SWITCH
MISCELLANEOUS			
1E 5	2	YKC21-0069	RCA JACK 2P
1E24	8	5E-T05	JUMP WIRE
1W 3	1	007S240B10-C-D	SOLDER-PLATED WIRE
1W13	1	468S244B08-J-Z	4-LEAD, FLAT CABLE
8M 6	1	2AE-03	LUG
JP101,102	2	MC02-533	MICRO SOCKET ASS'Y
JP103	1	MC03-377	MICRO SOCKET ASS'Y
JP104	1	MC03-378	MICRO SOCKET ASS'Y
JP105	1	MC06-534	MICRO SOCKET ASS'Y
JP402	1	MC03-537	MICRO SOCKET ASS'Y
JP403	1	MC03-536	MICRO SOCKET ASS'Y
12E11	1	BK-1	CORD CLAMP

P.C.BOARD ASS'Y

REF. NO.	Q'TY	PART NO.	DESCRIPTION
2P11	1	48A1P02A-1	POWER SUPPLY/PROTECT PCB ASS'Y
2P12	1	48A1P02A-2	FUSE PCB ASS'Y
2P13	1	48A1P02A-3	PRIMARY FUSE PCB ASS'Y
2P14	1	48A1P02A-4	INDICATORS PCB ASS'Y
2P15	1	48A1P02A-5	INDICATOR PCB ASS'Y
2P16	1	48A1P02A-6	POWER INDICATOR PCB ASS'Y
8P23	1	48A1P01A-1	L CH POWER AMP PCB ASS'Y
8P24	1	48A1P01A-2	R CH POWER AMP PCB ASS'Y
11P16	1	48A1P03A-1	INPUT VOLUME PCB ASS'Y
11P17	1	48A1P03A-2	INPUT PCB ASS'Y

EXPLODED VIEW

REF. NO.	Q'TY	PART NO.	DESCRIPTION
SEMICONDUCTORS			
D329~332	4	D6K20	DIODE
Q313,314	2	2SC3281-R,O	TRANSISTOR
Q315,316	2	2SA1302-R,O	TRANSISTOR
Q317,318	2	2SC3281-R,O	TRANSISTOR
Q319,320, 329,330	4	2SA1302-R,O	TRANSISTOR
Q331,332	2	2SC3281-R,O	TRANSISTOR
Q333,334	2	2SC1953-R,S	TRANSISTOR
COILS			
12E 1	1	NPT-2274S	POWER TRANSFORMER
SWITCHES			
S001	1	ESB-99713V	POWER SWITCH
S002	1	SW-5220179	SWITCH
MISCELLANEOUS			
1M 1	1	N21460-1A	FRONT PANEL
1M 3	1	N21461A-1A	FRONT SUB PANEL
1M 6	1	62-3480-0-0	BUTTON FRAME
1M 7	1	62-1111-1-0	PUSH BUTTON
1M 8	2	N44882	LED CHIP
1M11	2	KNB0448-0226	KNOB 18 (POTENTIOMETER)

REF. NO.	Q'TY	PART NO.	DESCRIPTION
1M16	1	N21462-1	REAR PANEL
1M18	1	N21463	CABINET
1M19	1	N21464	BOTTOM BOARD
1M21	1	N44236	LOCK PLATE
1M26	4	NO.7103-UL	FOOT
2E29	12	AC-261	MICA
2M 1	1	N21465	FRONT BOTTOM CHASSIS
2M 2	1	N30811D	SUPPORT CHASSIS (P.T.)
2M 3	1	N30956	FRONT SUB CHASSIS L
2M 4	1	N30957	FRONT SUB CHASSIS R
2M 5	2	N30958	SIDE CHASSIS
2M 6	2	N30812A	CENTER CHASSIS
2M 8	1	N44232	FITTINGS R (HEAT SINK)
2M 9	1	N44233	FITTINGS L (HEAT SINK)
2M11	2	N44235	FITTINGS (THERMAL RELAY)
2M16	1	N44336	SHIELD COVER
2M17	1	N44966	CUSHION (P.T.)
2M18	1	N44967-35	CABINET MAT
2M20	2	N44996	SPACER
2M21	1	N44931	SPACER
2M22	1	N44997	SHIELD CUSHION
2M26	2	N21240	HEAT SINK
3M13	1	N44043-1	LABEL, SA1965(LIGHTNING FLASH)
3M14	2	N44525	LABEL, FUSE
3M21~M23	5	SL.1024	LABEL, SERIAL NO.
4M 1	3	TSB+26X05-B	TAP SCREW S, BIND HEAD, B
4M 4	1	TSB+30X05-N	TAP SCREW S, BIND HEAD, N
4M 6~M10, M14,M15, M18,M19	18	TSB+30X06-Y	TAP SCREW S, BIND HEAD, Y
4M21~M25	12	TSB+30X06-B	TAP SCREW S, BIND HEAD, B
4M30	1	TSC+30X06-N	TAP SCREW S, WASHER FACED, N
5M 2~M 8	14	TSB+30X08-B	TAP SCREW S, BIND HEAD, B
5M16~M24	12	TSC+30X08-Y	TAP SCREW S, WASHER FACED, Y
5M26,M27	4	TSS+30X08-Y	TAP SCREW S, FLAT HEAD, Y
6M 5	2	TBB+26X08-B	TAP SCREW B, BIND HEAD, B
6M 6~M 9	8	TBB+30X08-Y	TAP SCREW B, BIND HEAD, Y
6M16~M21	20	TBB+30X12-Y	TAP SCREW B, BIND HEAD, Y
6M26~M30	7	TPM+30X08-B	TAP SCREW P, ROUND HEAD, B
7M 6~M 9	6	TSB+40X08-B	TAP SCREW S, BIND HEAD, B
7M14	4	TST+40X08-Y	TAP SCREW S, TRUSS, Y
7M16	4	TSP+40X12-Y	TAP SCREW S, PAN HEAD, Y

REF. NO.	Q'TY	PART NO.	DESCRIPTION
7M21	2	2AWX0826-05-B	PLAIN WASHER, B
7M23,M24	12	2AWX0830-05-Y	PLAIN WASHER, Y
7M30	2	2AWX0830-05-B	PLAIN WASHER, B
8M 1	6	2AWX0840-05-B	PLAIN WASHER, B
8M 9	1	2AE-05	LUG
TS301,302	2	UI2-10005-240A	THERMAL RELAY
12E 2	1	T120AR1U1-3	THERMAL RELAY
12E 3	1	ACC-035D5-9EK1	LINE CORD
12E 4	1	SR-4N-4	CORD STOPPER
12E 8	2	NO.5219	BUSH

PACKING PARTS

REF. NO.	Q'TY	PART NO.	DESCRIPTION
MISCELLANEOUS			
3M 1	1	N21476	SHIPPING CARTON
3M 2	1	N21477A	SHIPPING CARTON
3M 3	1	N45011	POLYETHYLENE BAG
3M 4	1	N40487	POLYETHYLENE BAG (ACCESSORIES)
3M 6	2	N21242A	PACKING PAD
3M11	1	OM-674A	INSTRUCTION MANUAL
3M12	1	N44687	CAUTION SHEET, POLARIZED PLUG
3M16	1	NAD-WC2	CARD, WARRANTY REGISTRATION

OTHER PARTS

REF. NO.	Q'TY	PART NO.	DESCRIPTION
MISCELLANEOUS			
1W 6	1	672S220B15-D-E	SOLDER-PLATED WIRE
1W 7	1	672S220W13-D-E	SOLDER-PLATED WIRE
1W17	8	U9-#06B015	UL TYPE TUBE
1W19	3	U9-#09B02	UL TYPE TUBE
1W21	1	GT-M08W05	GLASS TUBE
1W22	1	GT-M10W33	GLASS TUBE
1W26	1	672S220A36-D-E	SOLDER-PLATED WIRE
1W27	1	672S220N30-D-E	SOLDER-PLATED WIRE
12E12	6	BK-1	CORD CLAMP
12E14,E15	8	NO.5167	CORD CLAMP
12E17	1	R164P	CORD BAND

Capacitors Description

- **Electrolytic**

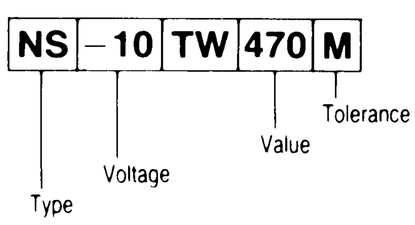

- **Mylar · Styrol**

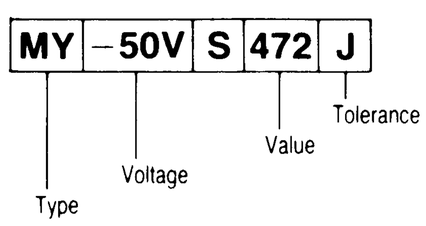

- **Electrolytic**

Type		Voltage		Value		Tolerance	
LL:	Low Leak	-10:	10V	R47:	0.47μF	K:	±10%
NP:	Non-Pole	-50:	50V	4R7:	4.7μF	M:	±20%
NS:	Standard	6R3:	6.3V	470:	47μF		
				471:	470μF		
				472:	4700μF		

- **Mylar · Styrol**

Type		Voltage		Value		Tolerance	
MY:	Mylar	-25V:	25V	4R7:	4.7pF	G:	±2%
ST:	Styrol	125V:	125V	470:	47pF	J:	±5%
		-63T:	63V	471:	470pF	K:	±10%
				472:	4700pF	M:	±20%
				473:	0.047μF		
				474:	0.47μF		
				(1000pF=0.001μF)			

- **Ceramic**

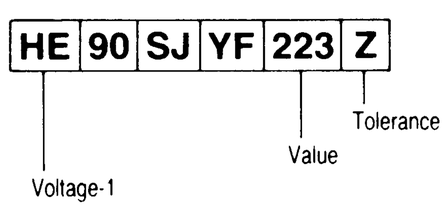

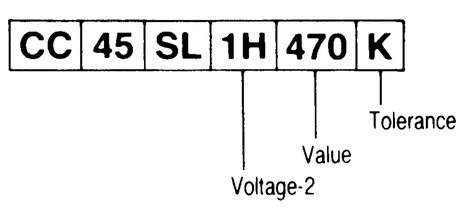

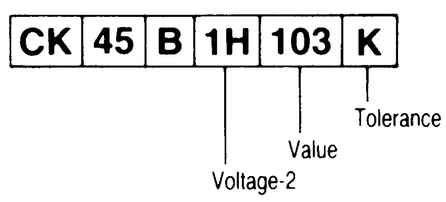

Voltage-1		Voltage-2		Value		Tolerance	
HC:	25V	1E:	25V	4R7:	4.7pF	C:	±0.25pF
HE:	50V	1H:	50V	470:	47pF	D:	±0.5pF
H:	100V	2H:	500V	471:	470pF	F:	±1pF
HK:	250V			472:	4700pF	J:	±5%
HM:	500V			473:	0.047μF	K:	±10%
				474:	0.47μF	M:	±20%
				(1000pF=0.001μF)		Z:	+80~-20%

Resistors Description

- **Fixed**

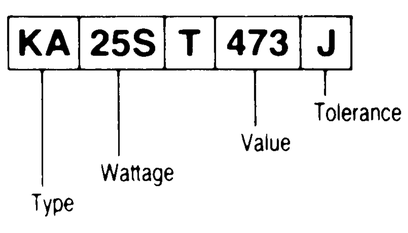

- **Semi-Variable**

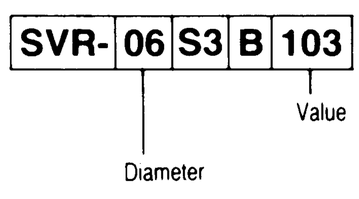

Type		Wattage		Value		Tolerance		Diameter	
CE:	Cement Case	-2W:	2W	R47:	0.47Ω	M:	±20%	08:	8φ
FR:	Flame Proof	10W:	10W	4R7:	4.7Ω	K:	±10%	10:	10φ
KA:	Carbon	16S:	1/6W	470:	47Ω	J:	±5%	06:	6φ
MF:	Metal Film	20S:	1/5W	471:	470Ω	G:	±2%		
RF:	Fusible	25S:	1/4W	472:	4.7kΩ	F:	±1%		
SA:	Metal Oxide	50S:	1/2W	473:	47kΩ	D:	±0.5%		
		50X:	1/2W	474:	470kΩ				
		S3W:	3W	475:	4.7MΩ				

NAD SERVICE MANUAL

MONITOR SERIES

2600

POWER AMPLIFIER