SCHEMATIC DIAGRAM

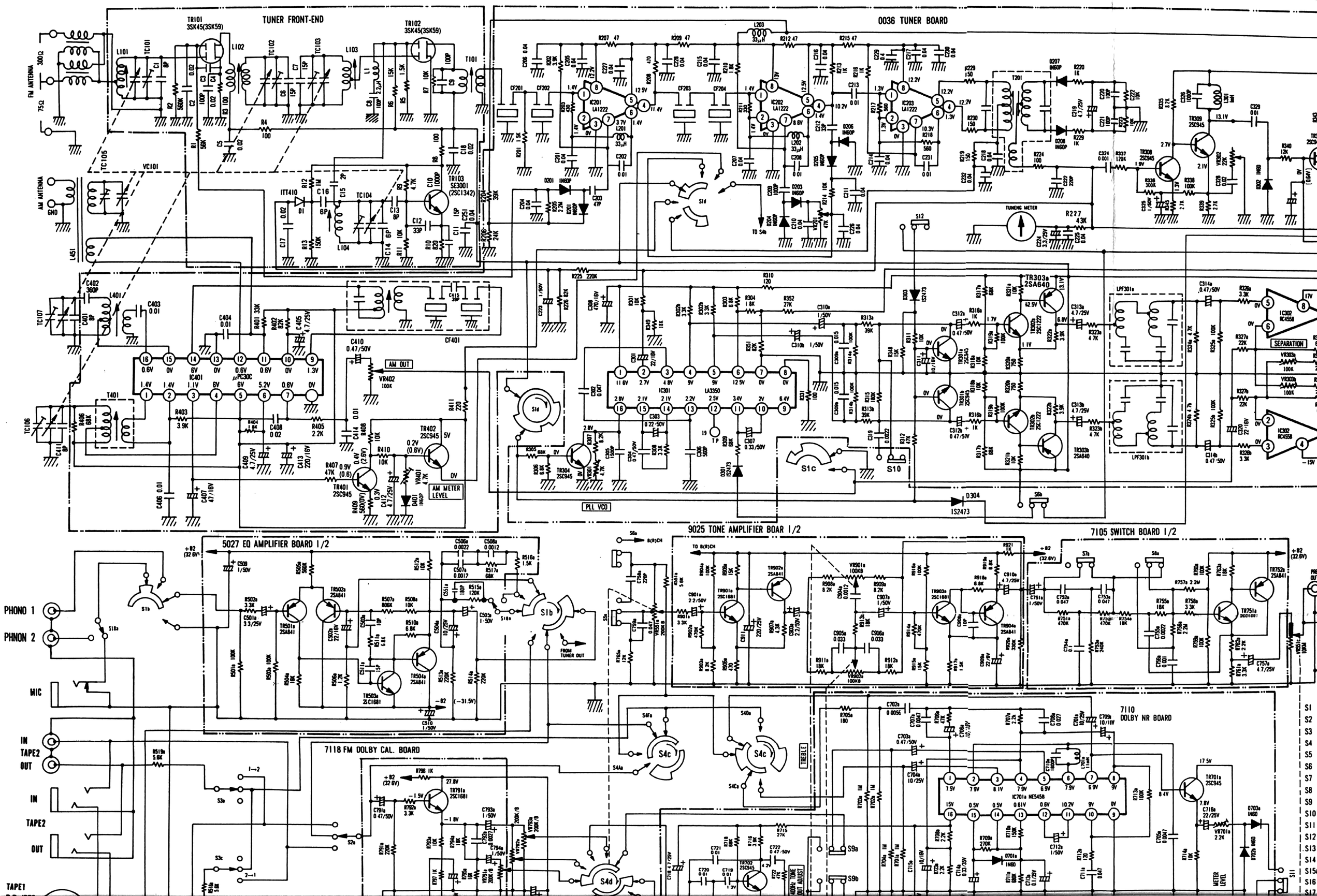

SCHEMATIC DIAGRAM

NAD Model 300

Stereo Receiver

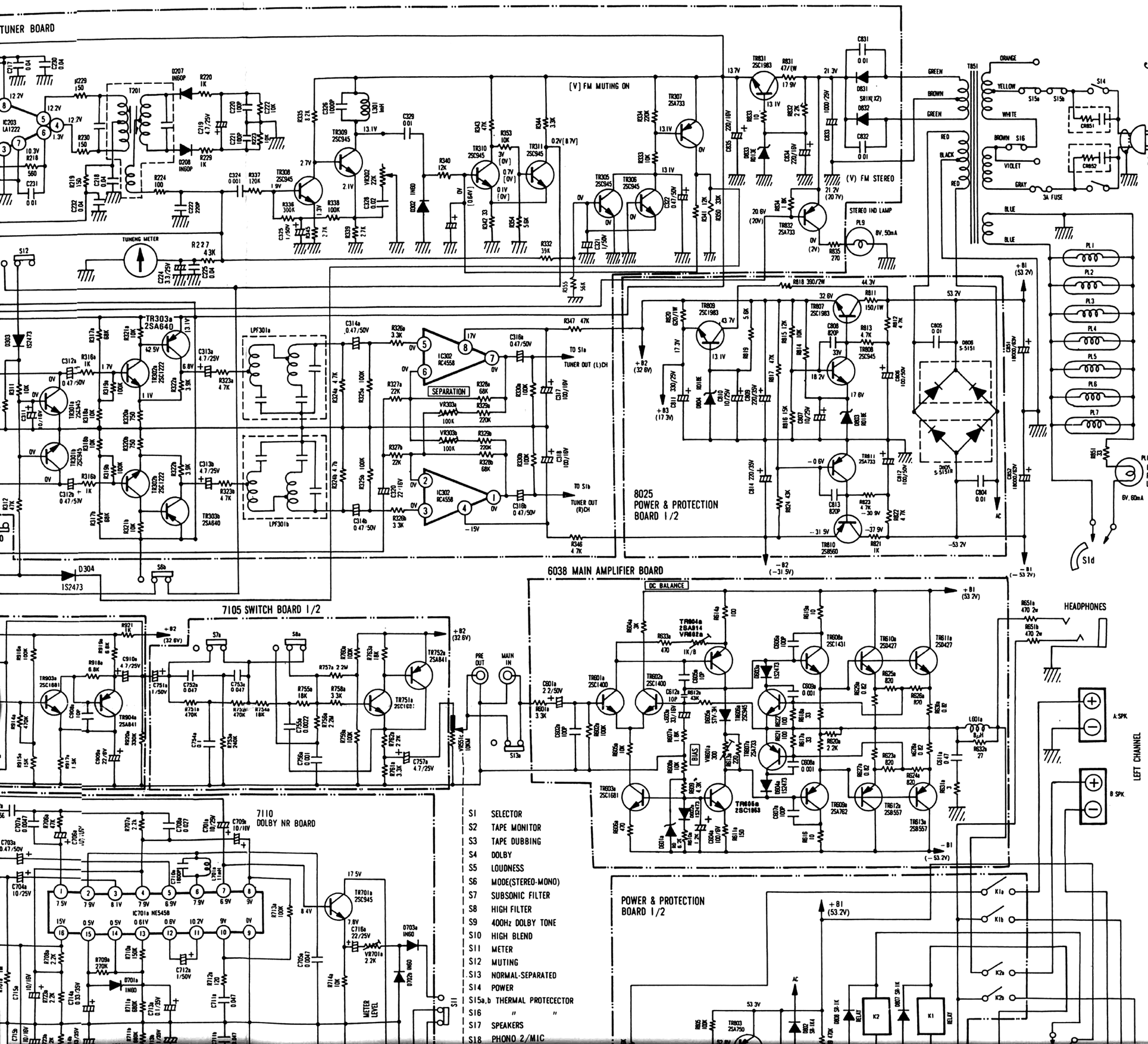

IC LA1222

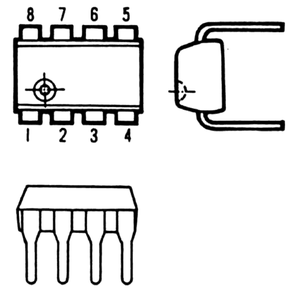

IC RC4558DN-F

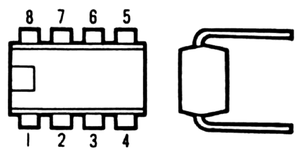

IC LA3350

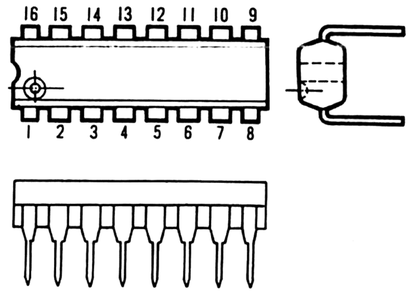

IC NE545B

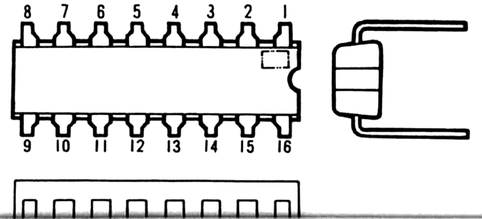

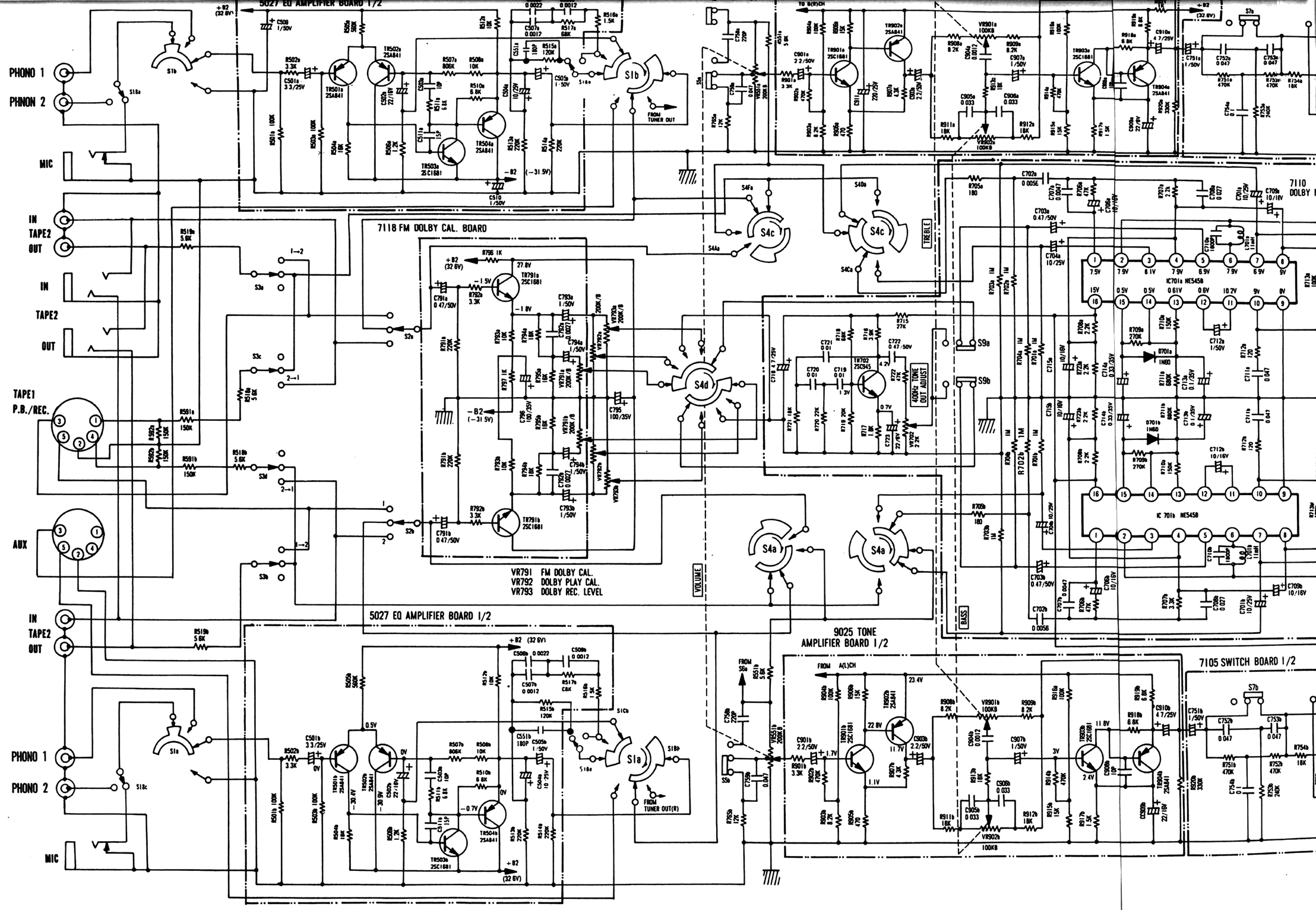
5027 EQ AMPLIFIER BOARD 1/2
7118 FM DOLBY CAL. BOARD
VR791 FM DOLBY CAL.
VR792 DOLBY PLAY CAL.
VR793 DOLBY REC. LEVEL
9025 TONE AMPLIFIER BOARD 1/2
7105 SWITCH BOARD 1/2
7110 DOLBY
PHONO 1
PHONO 2
MIC
IN
TAPE2
OUT
TAPE1
P.B./REC.
AUX
TREBLE
BASS
VOLUME
400Hz TONE OUT ADJUST
FROM TUNER OUT
FROM TUNER OUT(R)
FROM A(L)CH
TO B(R)CH
IC701a NE5458
IC 701b NE5458

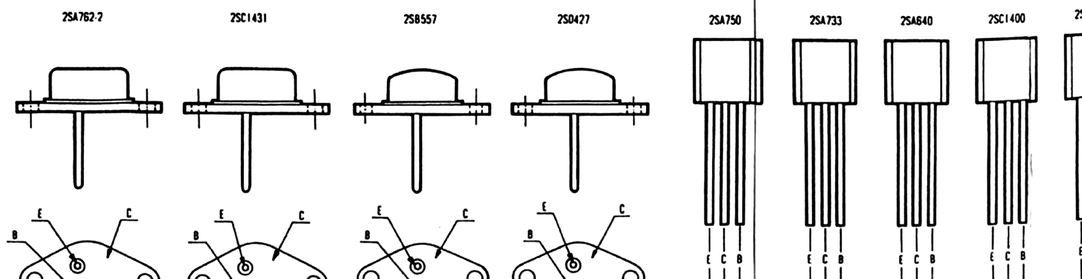
2SA762-2
2SC1431
2SB557
2SD427
2SA750
2SA733
2SA640
2SC1400

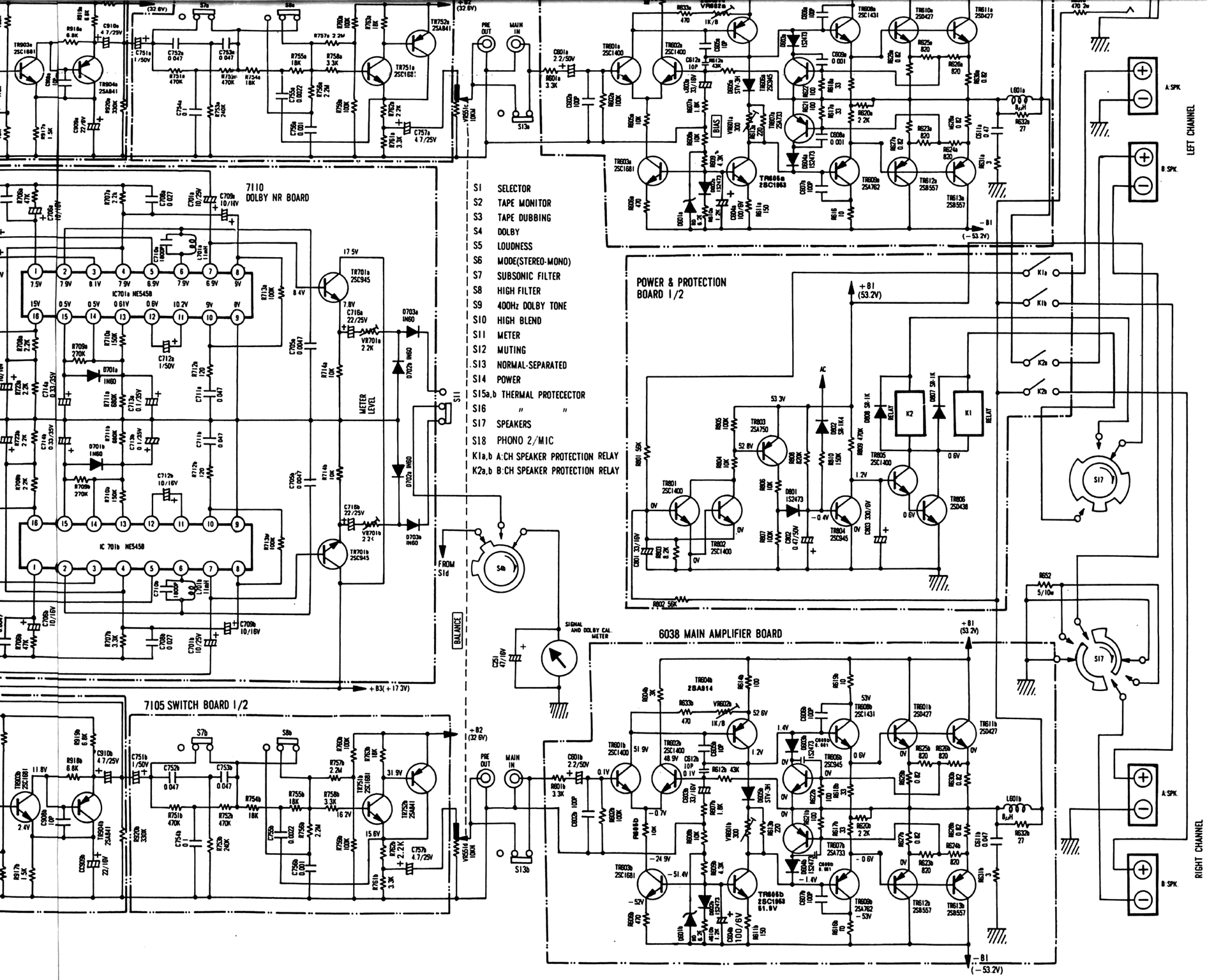

IC LA3350

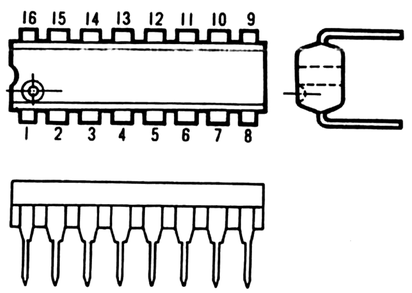

IC NE545B

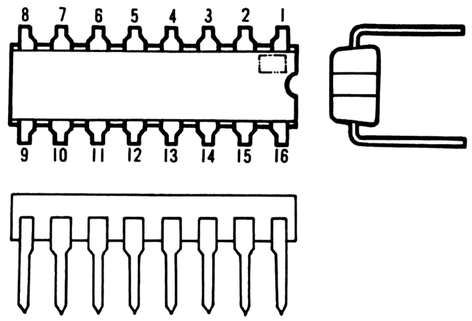

IC μPC30C

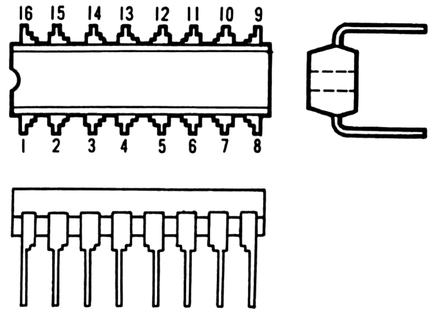

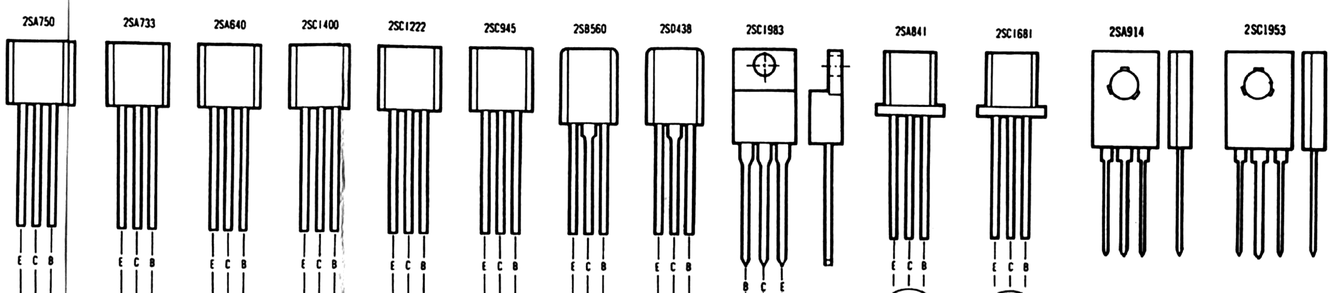

Note: 1. Resistance values are indicated in ohms unless otherwise specified (K=1,000, M=1,000,000).

2. Capacitance values are shown in microfarads unless otherwise noted (P=micro-microfarads).

3. Voltages are measured with respect to chassis ground in No Signal.

( ) 1,000 μV FM stereo signal.

[ ] volts with FM MUTING ON.