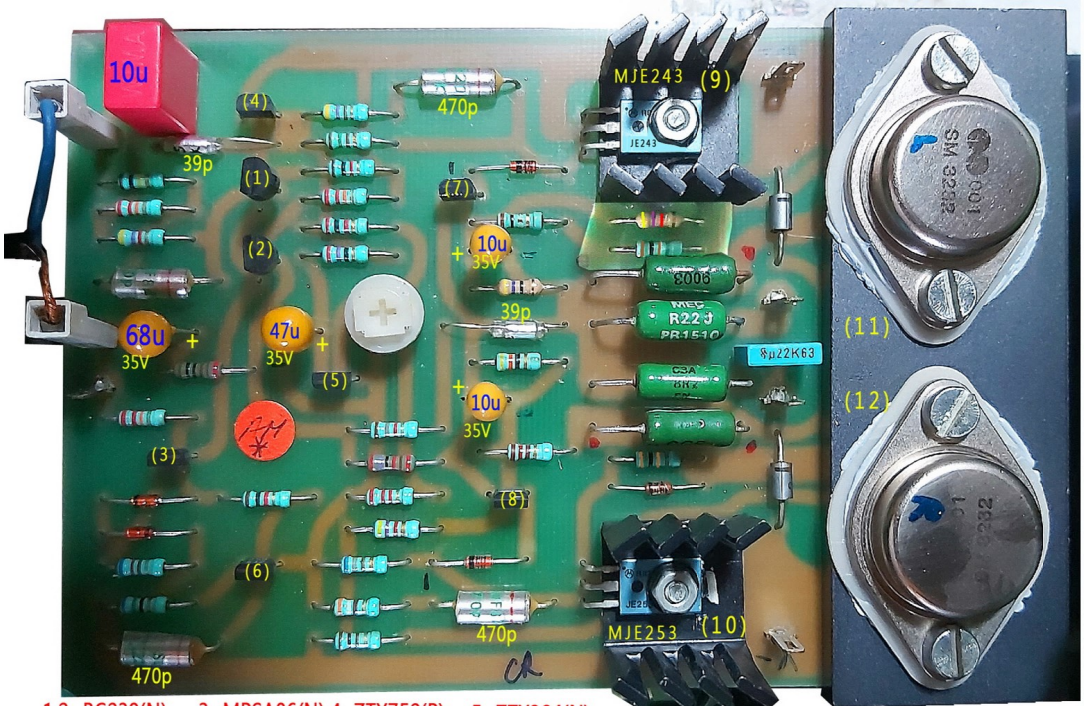


1,2=BC239(N) 3=MPSA06(N) 4=ZTX752(P) 5=ZTX384(N) 6=ZTX652(N) 7=MPSA06(N)
8=MPSA56(P) 9=MJE243(N) 10=MJE253(P) 11,12=NAIM001

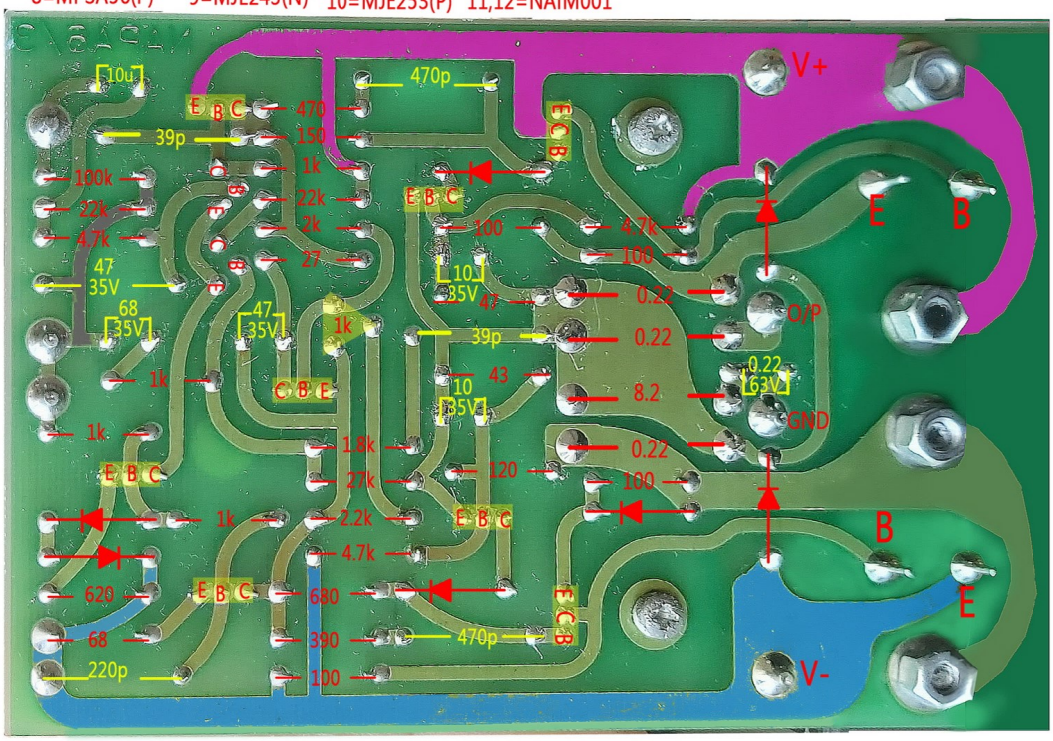

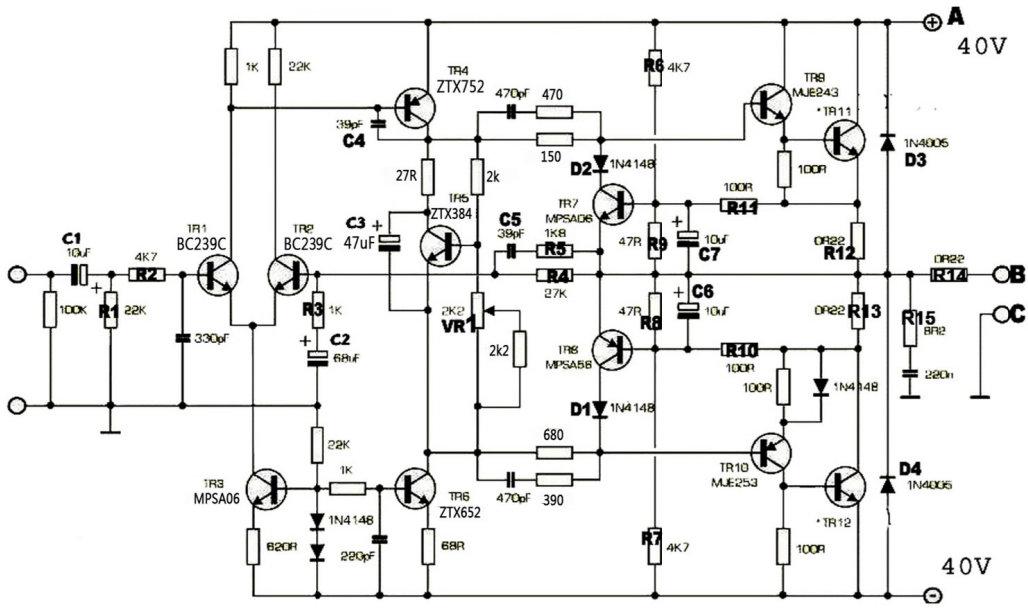
| TR | C | B | E |
|---|---|---|---|
| 1 | 37.100 | -0.022 | -0.593 |
| 2 | 22.700 | -0.021 | -0.593 |
| 3 | -0.593 | -31.300 | -31.500 |
| 4 | 1.178 | 31.500 | 32.300 |
| 5 | 0.953 | -0.590 | -1.239 |
| 6 | -1.237 | -31.000 | -31.600 |
| 7 | 1.071 | 0.224 | 0.000 |
| 8 | -1.083 | -0.220 | 0.000 |
| 9 | 32.100 | 1.165 | 0.567 |
| 10 | -31.700 | -1.184 | -0.572 |
| 11 | 32.200 | 0.566 | 0.007 |
| 12 | -0.007 | -31.600 | -32.400 |
| TR | C | B | E |
| 1 | 31.800 | -0.024 | -0.599 |
| 2 | 22.800 | -0.023 | -0.599 |
| 3 | -0.599 | -31.200 | -31.500 |
| 4 | 1.184 | 31.600 | 32.400 |
| 5 | 0.962 | -0.590 | -1.243 |
| 6 | -1.240 | -31.100 | -31.500 |
| 7 | 1.074 | 0.224 | 0.000 |
| 8 | -1.086 | -0.220 | 0.000 |
| 9 | 32.200 | 1.168 | 0.570 |
| 10 | -31.700 | -1.188 | -0.575 |
| 11 | 32.200 | 0.570 | 0.007 |
| 12 | -0.007 | -31.600 | -32.400 |