1. GENERAL

1.1. Voltage Selector

Voltage selector is installed on the rear panel for Other version of the Nakamichi ZX-9.
This voltage selector can select either 120 V or 220-240 V at customer's disposal.

1.2. Parts List for Carton and Packing

Part No.	Description	Q'ty
0F03671A	Inner Carton	1
0F03672A	Outer Carton	1
0F03629A	Packing	2

2. MECHANICAL ADJUSTMENTS

2.1. Mechanism Control Cam Adjustment

Before adjustment, remove the Front Panel Ass'y and the Cover Plate.

(1) Offset Adjustment of Control Motor Driver

(a) Refer to Fig. 2.1.
Adjust VR602 and VR603 on the Logic & Power P.C.B. Ass'y to locate approximately at the middle of the variable range. Then turn ON the Power switch.
VR602 (for Cam position stop)
VR603 (for Cam position play)

(b) Press the Stop button to set the cassette deck in Stop mode. Adjust VR602 (for stop) so that the "S" mark on the Cam corresponds to the pointer on the mechanism chassis.

(c) Press the Play button to set the cassette deck in Playback mode. (Cam will rotate, and the position marked with "PY" comes to the pointer.) Adjust VR603 (for play) so that the "PY" mark on the Cam corresponds to the pointer.

(d) Repeat above (b) and (c) 2 — 3 times so that the "S" and "PY" marks on the Cam correspond to the pointer accurately in Stop and Playback modes respectively.
(This adjustment is required because the position adjusted by one volume will be slightly changed when the other volume is adjusted.)

(e) Set the cassette deck in F.F., Pause, or Cue mode by pressing each button (press F.F. and Pause buttons to set the cassette deck in Cue mode) and check to insure that the pointer is in a range of "F", "PS", or "CU" mark respectively.

(f) If out of the range, precise adjustment for each position according to "(2) Offset Fine Adjustment of Control Motor Driver" will be required.

(2) Offset Fine Adjustment of Control Motor Driver

Adjust only if a satisfactory result is not obtained in "(1) Offset Adjustment of Control Motor Driver". This adjustment is made by changing the value of the fixed resistors on the Logic & Power P.C.B. Ass'y.
Note: The value of voltage is typical value.

(a) Observation Point of Reference Voltage

Observe the each voltage at the sliding contact of the Cam Control Volume VR604 (10 kΩ) in Stop, Fast (F.F. or Rew.), Pause and Playback modes.

(b) Reference Voltage

Reference voltage at the sliding contact of VR604 (Cam Control Volume) in each mode is as follows:

Mode	Reference Voltage (Typical Value)	
Stop	0 V	2.0 V ±0.25 V
Fast (F.F./Rew.)	—2.0 V	
Pause	—6.5 V	2.6 V ±0.4 V
Play	—9.1 V	

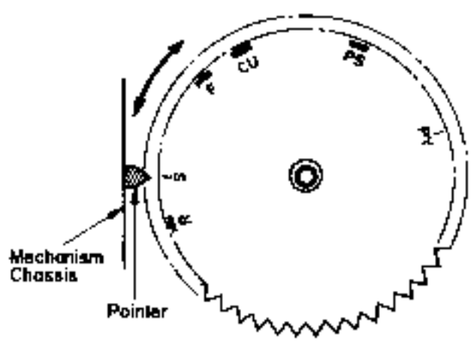

Fig. 2.1

(c) Resistors for Adjustment

Mode	Ref. No.	Typical Value
Fast (F.F./Rew)	R647	22 kΩ
Pause	R649	76.8 kΩ (F)
Play	R648	10 kΩ

(d) Adjustment Procedures

1) Set the cassette deck in Stop mode, then check to insure that the voltage at the sliding contact of VR604 is 0 V (±0.3 V).
2) Set the cassette deck in F.F. mode, then adjust the value of R647 so that the voltage at the sliding contact of VR604 will become lower by 2.0 V (±0.25 V) than in Stop mode.
3) Press the Pause button to set the cassette deck in Pause mode. Adjust the value of R649 to obtain —6.5 V (+0.4, —0.15 V) at the sliding contact of VR604.
4) Set the cassette deck in Playback mode, then adjust the value of R648 so that the voltage at the sliding contact of VR604 will become lower by 2.6 V (±0.4 V) than in Pause mode.

2.2. Reel Motor Speed Adjustment in Play Mode

(1) Connect a DC voltmeter to TP1 and GND on the Logic & Power P.C.B. Ass'y.
(2) Without loading a cassette tape, set the cassette deck in Play mode.
(3) Adjust VR601 on the Logic & Power P.C.B. Ass'y to obtain —4 V on the DC voltmeter.

2.3. Record Head and Playback Head Tilt Adjustment

Note: On items 2.3 — 2.9, refer to Fig. 2.2 flow chart.
Refer to Figs. 2.3 and 2.4.

(1) Load a Tilt Check Guage M-9039 (DA09039A) in the cassette deck.
(2) Clip the grounding terminal of the Tilt Check Gauge with one end of the cord wth clip, and the chassis of the cassette deck with the other end.
(3) Remove both of the Height Gears.
(4) Set the cassette deck in Play mode. Check to insure whether the Beacons Playback Head "Upper" or "Lower" and Record Head "Upper" or "Lower" are illuminating. In order not to give damages onto the head surfaces, push both of slide knobs of the Gauge to the direction of arrow marks, then return them to the original place to be in contact with record head and playback head surfaces after Play mode is securely locked.
(5) Check to insure freedom from contact between the Gauge and pad lifter.
(6) Beacon Playback Head "Lower" will light on when height adjustment screw (P) turned clockwise but Playback Head "Upper" when counterclockwise. Adjust so that both "Upper" and "Lower" will light on even when you move the slide knob to the direction of an arrow mark and then return it to the original place.
(7) Same procedures will apply to the Beacons Record Head "Upper" and "Lower", except for the height adjustment screw (R).
(8) Set the cassette deck in Stop mode and fit both of the serrated Height Gears. Then set the cassette deck again in Play mode and insure all of the 4 Beacons are illuminating. If not, (3) through (7) will have to be repeated till satisfactory results are obtained.

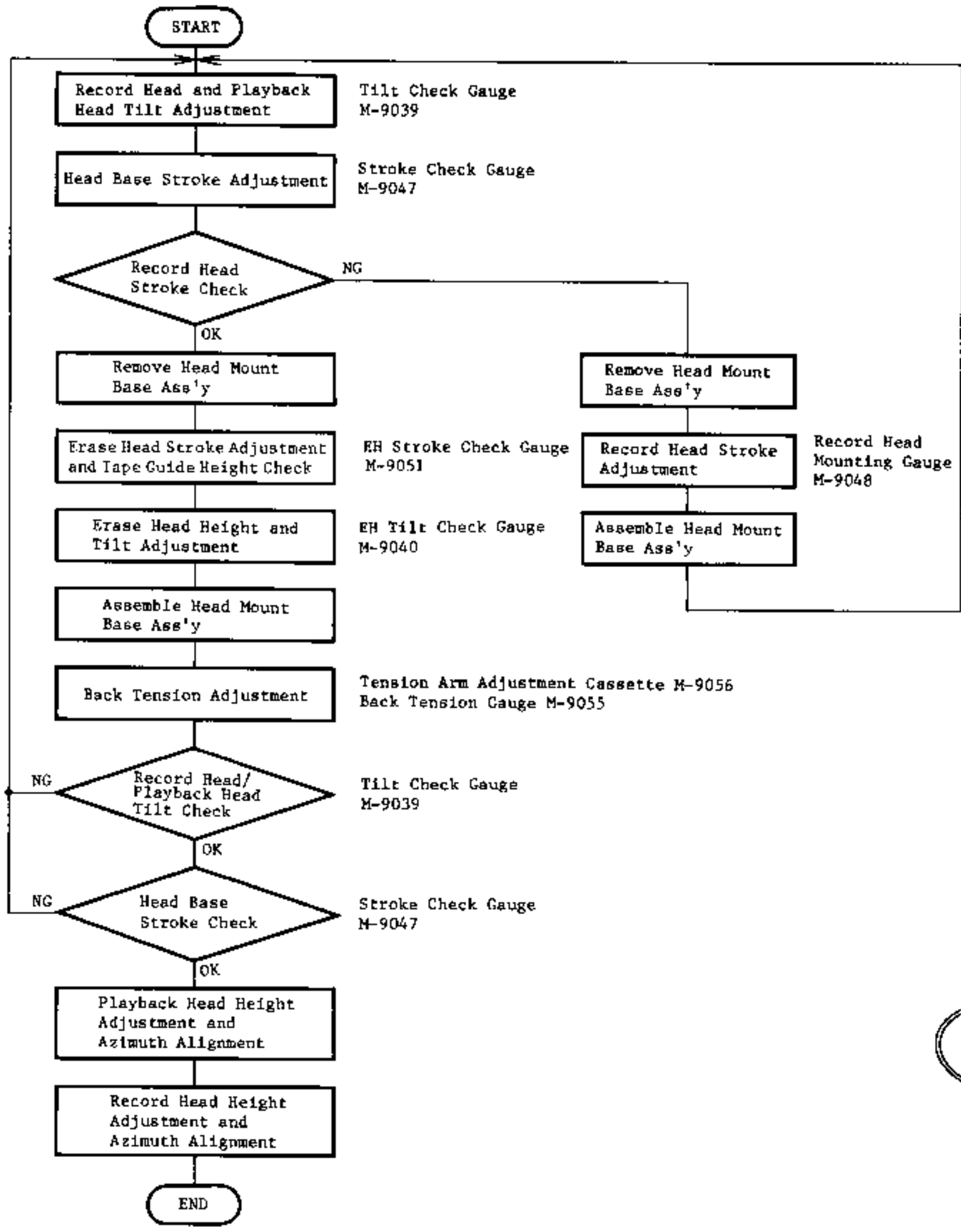

Fig. 2.2

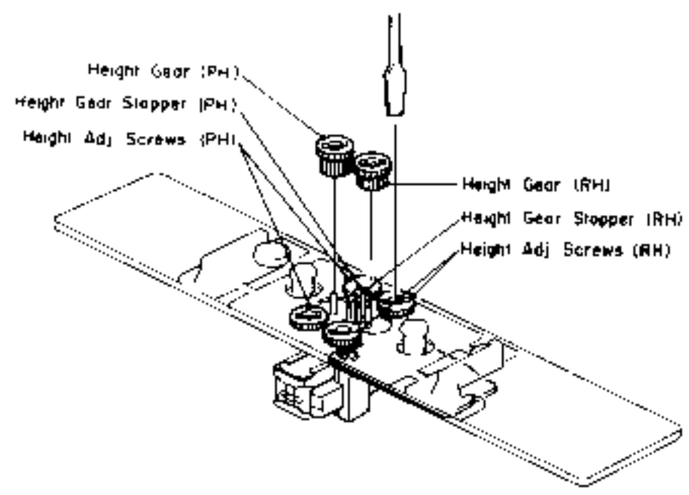

Fig. 2.3

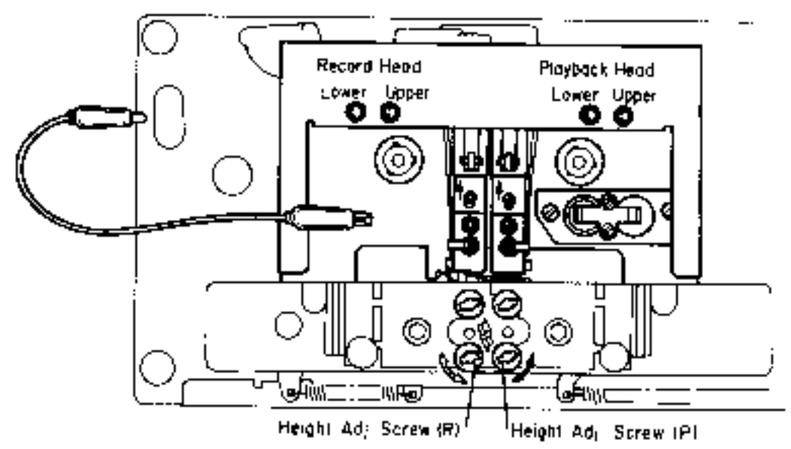

Fig. 2.4

2.4. Head Base Stroke Adjustment

Refer to Fig. 2.5.

Note: Before you conduct this adjustment, adjust with a "Tilt Check Gauge" to insure freedom from tilt on the playback head and record head.

(1) Head Base Stroke Adjustment in Play Mode

(a) Load a Stroke Check Gauge M-9047 (DA09047B) in the cassette deck.

(b) Move Record Head Indicator and Playback Head Indicator to the direction of arrow mark "A" with your finger tip and then set the cassette deck in Play mode.
Then slowly release the Indicators and insure whether each of the Indicators is in contact with record and playback heads.

(c) Check to insure whether the "P" pointer on the Playback Head Indicator locates between the 2 lines on the Indicator Plate.

(d) If the playback head stroke is noted to be misaligned, adjustment can be made by moving the stroke adjuster assembled in the head base assembly (either forwardly or backwardly).

(e) Check to insure whether the "P" pointer on the Playback Head Indicator locates between the 2 lines on the Record Head Indicator, thus check can be made on record head stroke.

(f) If the record head stroke is noted to be misaligned, adjustment can be made with a Record Head Mounting Gauge M-9048 (DA09048A).

(2) Head Base Stroke Adjustment in Cue Mode

(a) Load a Stroke Check Gauge M-9047 (DA09047B) in the cassette deck.

(b) Move Record Head Indicator and Playback Head Indicator to the direction of arrow mark "A" with your finger tip and then set the cassette deck in Cue (F.F. and Pause) mode.
Then slowly release the Indicators and insure whether each of the Indicators is in contact with record and playback heads.

(c) Check to insure whether the "C" pointer on the Playback Head Indicator locates between the 2 lines on the Indicator Plate.

(d) If the playback head stroke is noted to be misaligned, adjust VR610 on the Logic & Power P.C.B. Ass'y till satisfactory results are obtained.

(e) After completion of the Head Base Stroke Adjustment, check to insure accuracy of the Head Base Stroke Adjustment in Play mode.
If the above are inaccurate, items (1) and (2) will have to be repeated till satisfactory results are obtained.

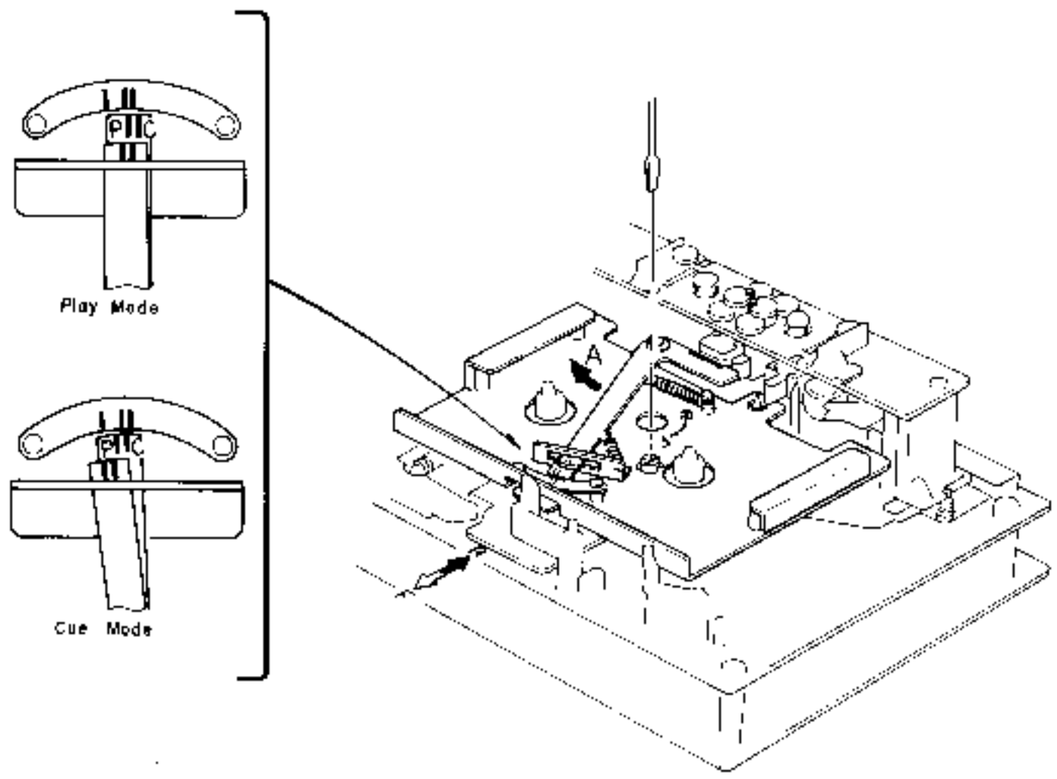

Fig. 2.5

(7) Check to insure whether the horizontal line on the mirror corresponds to that on the erase head. If not, (4) through (7) will have to be repeated till satisfactory results are obtained.
(8) After completion of adjustment, 3 pcs. of screws shall be locked with lock tight paint.

Note: Before use of this gauge, check to insure freedom from dust or dirts, or overflow in the groove of the erase head surface.

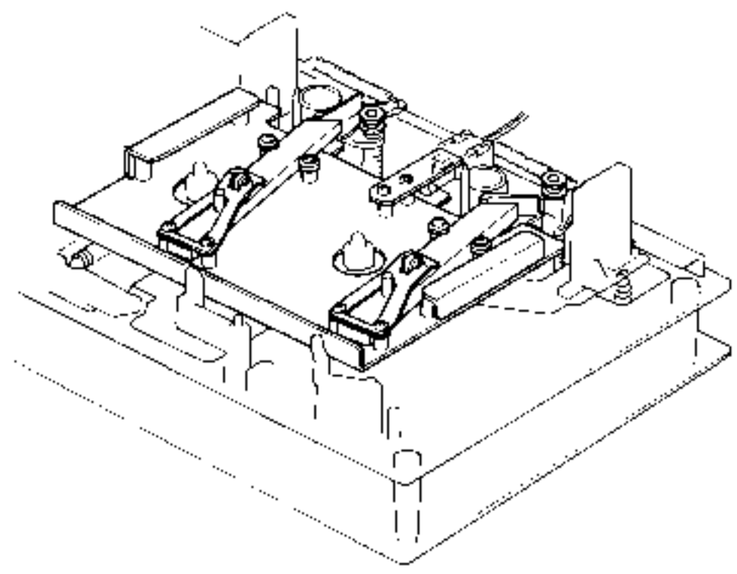

Fig. 2.6

2.5. Erase Head Stroke Adjustment and Tape Guide Height Check
Remove the Head Mount Base Ass'y.
Refer to Figs. 2.6 and 2.7.

(1) **Erase Head Stroke Adjustment**
(a) Load an EH Stroke Check Gauge M-9051 (DA09051A) in the cassette deck.
(b) Set the cassette deck in Play mode, thus check can be made on erase head stroke through the EH Stroke Indicator.
(c) Check to insure whether the erase head surface is aligned with red line on the EH Stroke Indicator. If not, adjust the erase head stroke by loosening 2 screws A that assemble erase head and erase head plate.
(d) After completion of adjustment, 2 pcs. of screws shall be locked with lock tight paint.

(2) **Supply Tape Guide Height Check**
(a) Load an EH Stroke Check Gauge M-9051 (DA09051A) in the cassette deck.
(b) Set the cassette deck in Play mode.
(c) Slide the Supply Tape Guide Check Bar down against the supply tape guide, and check to insure that the Supply Tape Guide Check Bar is accepted by the supply tape guide.

(3) **Take-up Tape Guide Height Check**
(a) Load an EH Stroke Check Gauge M-9051 (DA09051A) in the cassette deck.
(b) Set the cassette deck in Play mode.
(c) Slide the Take-up Tape Guide Check Bar down against the take-up tape guide, and check to insure that the Take-up Tape Guide Check Bar is accepted by the take-up tape guide.

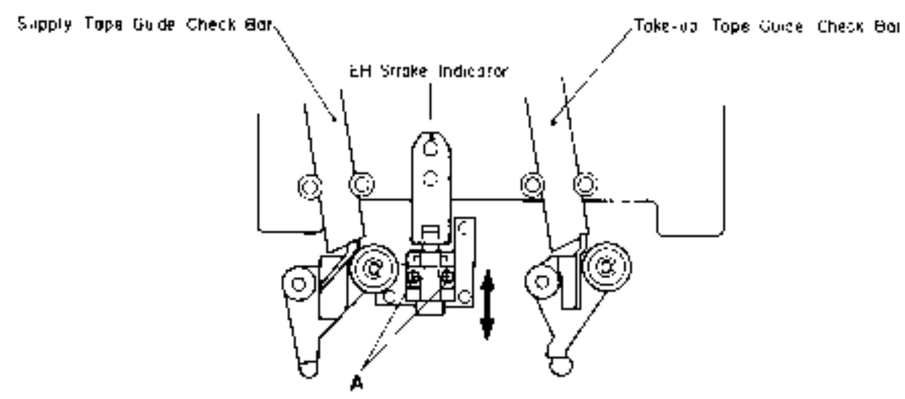

Fig. 2.7

2.6. Erase Head Height and Tilt Adjustment
Refer to Figs. 2.8 and 2.9.
(1) Remove Head Mount Base Ass'y.
(2) Load an EH Tilt Check Gauge M-9040 (DA09040A) in the cassette deck.
(3) Set the cassette deck in Stop mode.
(4) Check to insure whether one of the 3 Beacons is illuminating. Look down the mirror as shown by an arrow mark and slowly turn the Screw "Height" counterclockwise (or clockwise) so that the two horizontal lines on the mirror will become superposed on the line (in different color) of the erase head, and check to insure whether Beacon "1" is illuminating.
(5) Turn Screw "Tilt" counterclockwise (or clockwise) to light on Beacon "2". Excessive turning will cause the Beacon "1" to light off. Adjustments of Screw "Tilt" will therefore be conducted till both of the Beacons "1" and "2" illuminate.
(6) Turn Screw "Azimuth" counterclockwise (or clockwise) to light on Beacon "3". Excessive turning will cause either Beacon "1" or "2" to light off, and therefore adjust Screw "Azimuth" until all of the 3 Beacons "1", "2" and "3" illuminate.

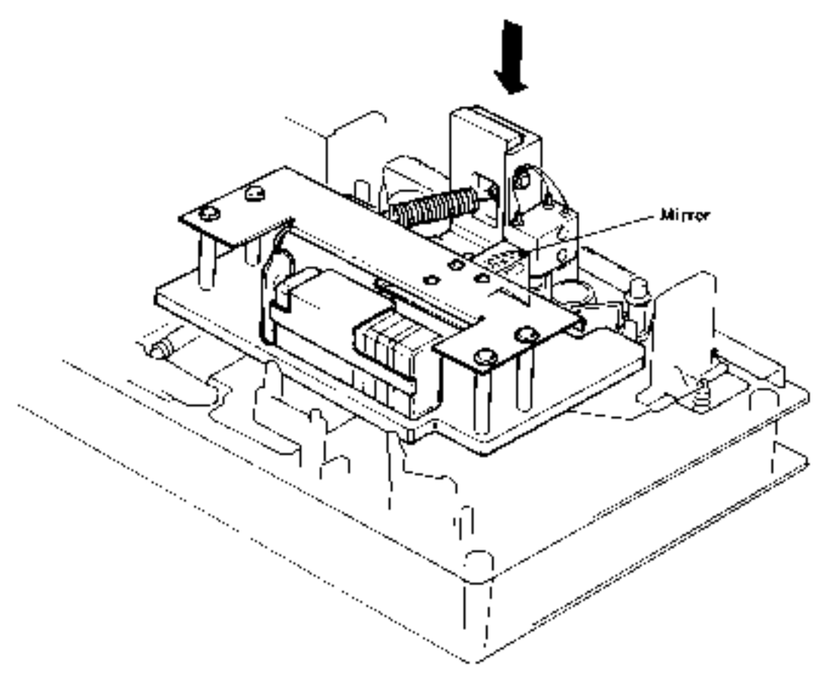

Fig. 2.8

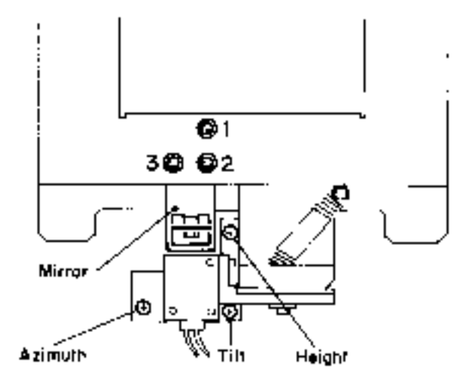

Fig. 2.9

2.7. Back Tension Adjustment

Refer to Figs. 2.10 — 2.13.

(1) Load a Tension Arm Adjustment Cassette (DA09056A) in the cassette deck referring to Fig. 2.10.

(2) Set the cassette deck in Play mode.

(3) Bend the Back Tension Arm with pliers so that the gap between the Cassette Holding Spring assembled on the Head Base Ass'y and the Back Tension Arm becomes 0.5 mm as shown in Fig. 2.11. Do not bend the top of the Back Tension Arm.

(4) Set the cassette deck in Stop mode, and remove the Tension Arm Adjustment Cassette (DA09056A), then set the cassette deck in Cue mode.
In Cue mode, check to insure that the gap is found between the Supply Reel Hub B Ass'y and the Felt of Back Tension Ass'y as shown in Fig. 2.12.

(5) Load the Back Tension Gauge (DA09055A) in the cassette deck.

(6) Set the cassette deck in Play mode and read the torque value of Back Tension Gauge.
If the value is in a range of 6 g-cm to 10 g-cm, adjustment is not necessary. If not, change the installation point of the Back Tension Spring as shown in Fig. 2.13, and obtain the torque of 7 g-cm to 9 g-cm range.

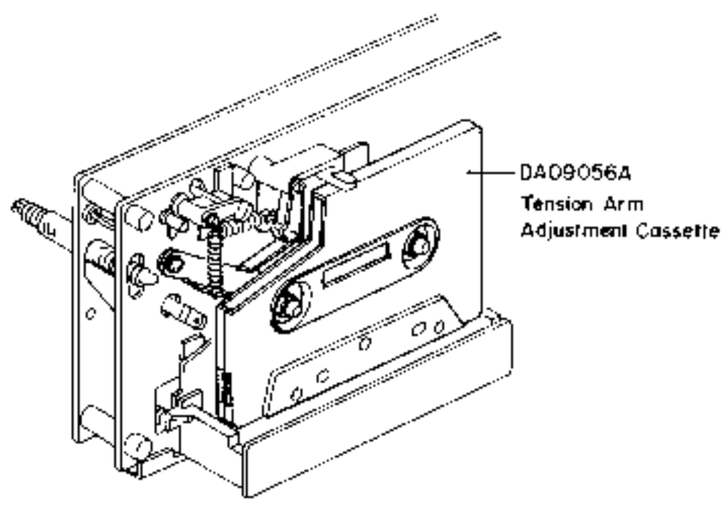

Fig. 2.10

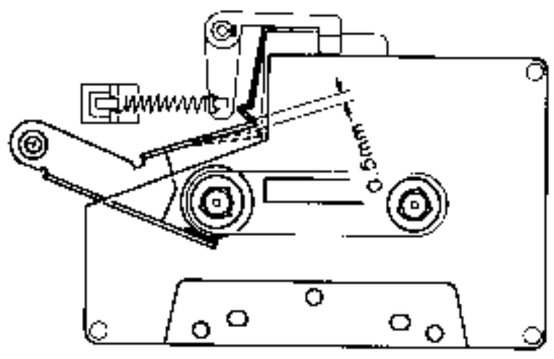

Fig. 2.11

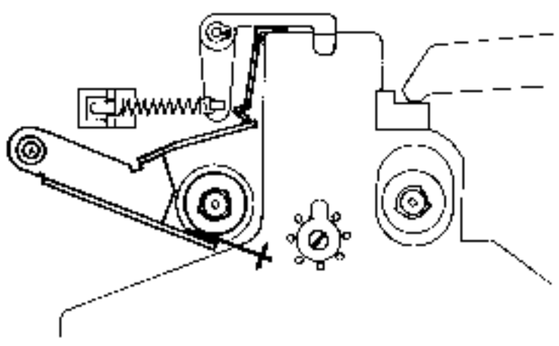

Fig. 2.12

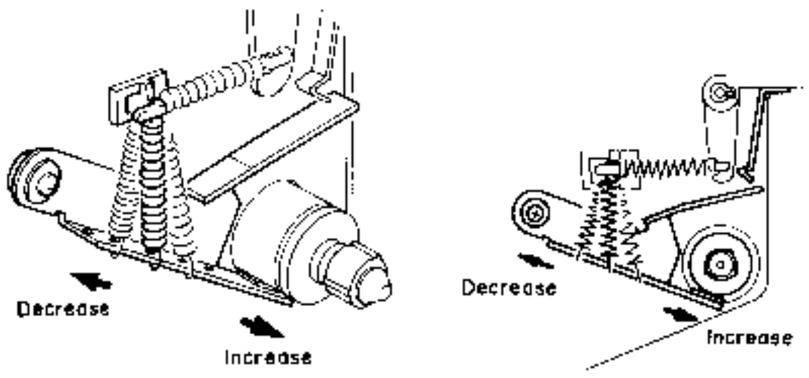

Fig. 2.13

2.8. Playback Head and Record Head Height Adjustment and Azimuth Alignment

(1) Playback Head Height Adjustment and Azimuth Alignment

Refer to Fig. 2.15.

(a) Set the Monitor switch to Tape, then connect a VTVM to the Output Jacks.

(b) Load a 1 kHz Track Alignment Tape (DA09007A), then set the cassette deck in Play mode.

(c) Turn the PH Height Gear until the outputs of both channels become minimum.

(d) Load a 15 kHz Azimuth Tape (DA09004A), then set the cassette deck in Play mode.

(e) Turn the PH Azimuth Alignment Screw until the outputs of both channels become maximum.

(f) Repeat above steps (b) through (e) one or two times to obtain optimum performance.

(2) Record Head Height Adjustment and Azimuth Alignment

Refer to Figs. 2.14 — 2.16.

(a) Set the cassette deck in Stop mode.

(b) Press the Azimuth Alignment Start button to ON.

(c) Adjust the Azimuth Alignment Knob so that the Slide Lever of the Azimuth Alignment Wire is located at the center of the slit of the Azimuth Alignment Wire as shown in Fig. 2.14.

(d) Press the Azimuth Alignment Start button to OFF.

(e) Set the Monitor switch to Tape, Eq. switch to 70 μs and Tape Selector button to SX.

(f) Load a reference SX tape (DA09025A) and connect a VTVM to Output Jacks.

(g) Press the Record and Play buttons, then press the Level Calibration Start button to oscillate 400 Hz.
Turn the RH Height Gear until the outputs of both channels become maximum.

(h) Press the Bias Calibration Start button to oscillate 15 kHz, then turn the RH Azimuth Alignment Screw until the outputs of both channels become maximum.

(i) Repeat (g) and (h) one or two times to obtain optimum performance.

(j) Press the Record and Play buttons, then press the Azimuth Alignment Start button to ON.
Adjust VR304 on the Main P.C.B. Ass'y so that the red indicator in the middle of the Azimuth Indicator is lit up.
Note: Use the same side of the tape as used in the above steps.

(k) After completion of the above adjustment, press the Record and Play buttons, then press the Level Calibration Start button to oscillate 400 Hz.
Record 400 Hz tone to the same portion of both sides A and B of the tape.

(l) Immerse the recorded tape in a magnetized developing solution. In turn, check to insure that the recording head tracks across the center are separated with a distance of 0.55 to 0.75 mm (typically 0.65 mm) as illustrated in Fig. 2.16.
Note: Liquid for tape magnetized development solution "MAGNA-SEE SOUND CRAFT a product of CBS RECORDS a division of Columbia Broadcasting System, Inc., Danbury, Conn. 06810 U.S.A., or equivalent".
After development, clean the tape otherwise pressure rollers and heads will become dirty.

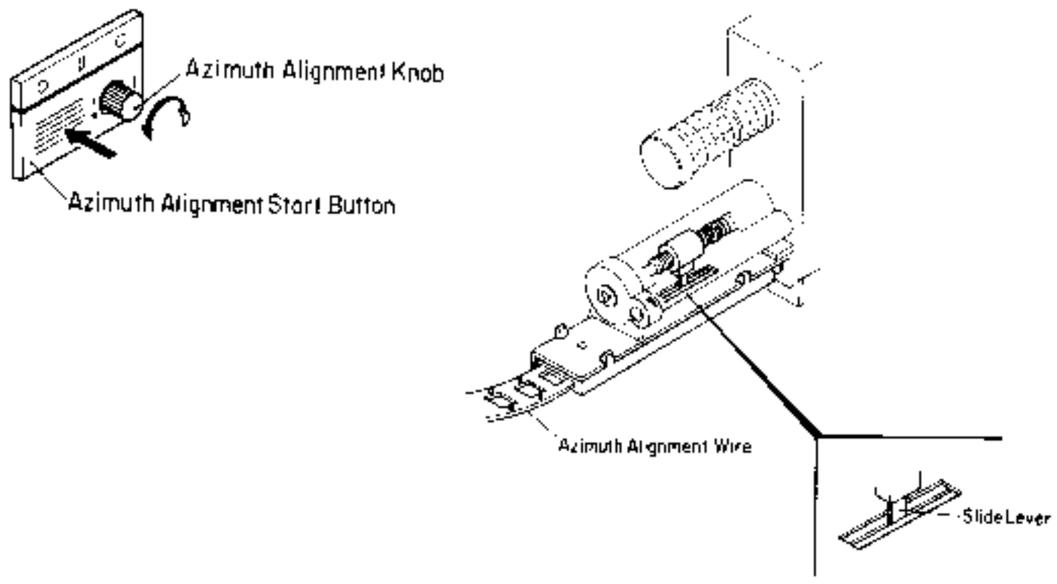

Fig. 2.14

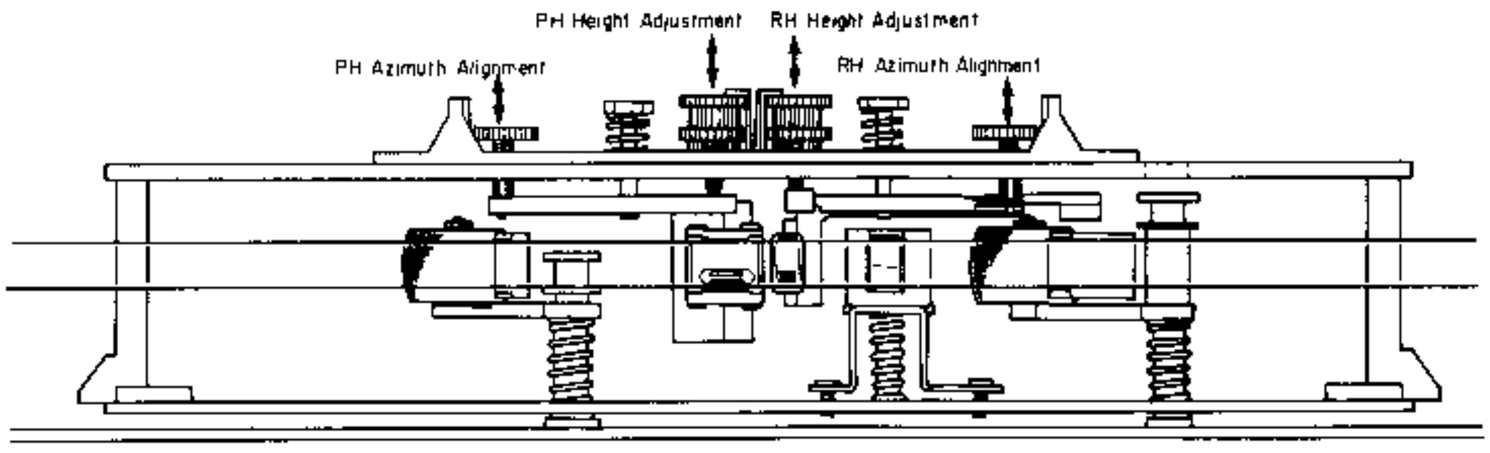

Fig. 2.15

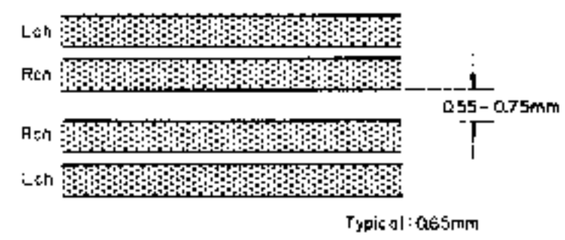

Fig. 2.16

2.9. Record Head Stroke Adjustment

Refer to Figs. 2.17 and 2.18.

Note: This adjustment will be required only to insure freedom from misalignment of the record head stroke in the record head stroke check mode.

(1) Check the accuracy of the record head stroke.
(2) Remove Head Mount Base Ass'y.
(3) Remove the record head assembly.
(4) Adjustment of Record Head Mounting Gauge M-9048 (DA0-9048A)
  (a) Mount the Block B onto the Mounting Gauge Plate.
  (b) Loosen the 2 screws fixing the Block A.
  (c) As shown in Fig. 2.17, hold the Gauges (3.05 mm and 0.1 mm thickness) between the Block A and Block B, and fix the Block A with screws, pushing the Block A to the 2 guide pins.
(5) Remove the Block B from the Mounting Gauge Plate.
(6) As shown in Fig. 2.18, mount the R-8L record head assembly onto the Mounting Gauge Plate, then check the location of the R-8L record head surface. (If record head touches the Block C, loosen 2 pcs. of screws that assemble record head and record head plate, then place the R-8L record head assembly onto the Plate.)
(7) Remove the R-8L record head assembly from the Mounting Gauge Plate.
(8) Readjustment of Record Head Mounting Gauge M-9048 (DA09048A)
  (a) Mount the Block B onto the Mounting Gauge Plate.
  (b) Loosen the 2 screws fixing the Block A.
  (c) As shown in Fig. 2.17, hold the Gauges (3.05 mm and either one of 0.05, 0.15, 0.2, 0.25, 0.3 or 0.35 mm thickness) between the Block A and Block B, and fix the Block A with screws, pushing the Block A to the 2 guide pins.
(9) Remove the Block B from the Mounting Gauge Plate.
(10) Mount the R-8L record head assembly onto the Mounting Gauge Plate.
(11) As shwon in Fig. 2.18, loosen 2 pcs. of screws that assemble record head and record head plate.
  As the location of the Block A is secured by the item (8)-(c), push the record head to the directions A and B, then tighten 2 pcs. of screws.
(12) Check to insure freedom from gap between the Block C and record head surface, then tighten the 2 pcs. of screws on the record head assembly with lock tight paint.
(13) Remove the R-8L record head assembly from the Mounting Gauge Plate.
(14) Assemble the record head assembly to the head mount base assembly.
(15) Assemble the head mount base assembly to the mechanism assembly.
(16) Check the record head stroke.
  If the above are inaccurate, items (1) through (16) will have to be repeated till satisfactory results are obtained.

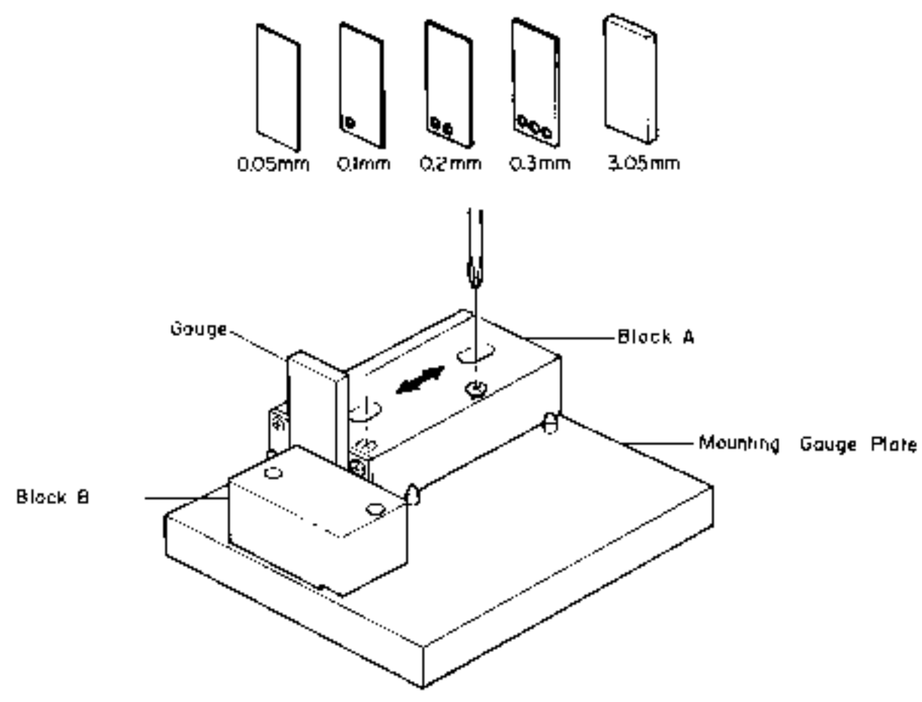

Fig. 2.17

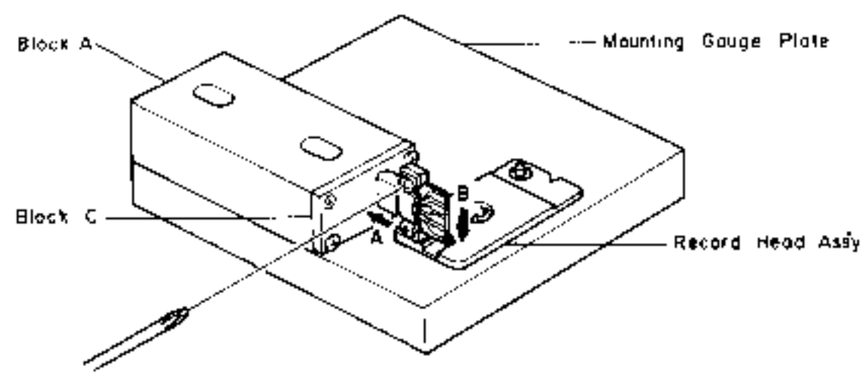

Fig. 2.18

2.10. Tape Travelling Adjustment

The adjustment shall be made with a modified version of the current type EXII C-90 as shown in Fig. 2.19. (error will be made if a current type Tape Travelling Cassette (DA09011A) should be used for this purpose).

While modifying an EXII C-90, the tape guides in the cassette housing shall be kept protected to avoid tilt.

Check shall be made in the following procedures:

(1) An EXII C-90 tape thus modified shall be loaded onto the cassette deck.

(2) Release the back-tension (rotate the Supply Reel and feed out some length of tape) and set the cassette deck in Play mode.

(3) In this juncture, check to insure whether the tape is free from waving or slippage from the tape guide.

(4) When the modified EXII C-90 is played back, check to insure whether the tape is freedom from waving from head surface or at pressure rollers.

(5) If either of waving or slippage from the tape guide should be noted, adjustments of items 2.3 to 2.9, etc. will be required.

As a case may be, the said waving or slippage may have been caused from defective Supply Pressure Roller Ass'y or Take-up Pressure Roller Ass'y without parallel contact with capstans. If such are noted, the Pressure Roller Assemblies will have to be replaced.

Further, excessively weak take-up torque or strong take-up torque may cause defective tape travelling.

The cassette deck is intended to be an adjustment-free model, however if the similar matters as above should be noted, please replace the Reel Hub Ass'y to obtain appropriate take-up torque.

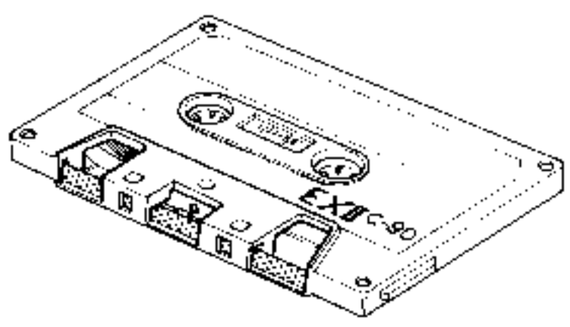

Fig. 2.19

2.11. Flywheel Ass'y Height Adjustment

Refer to Fig. 2.20.

(1) Adjust the Thrust Screw so that the gap between the Motor Coil Ass'y and the Take-up Flywheel Ass'y becomes 0.7 mm.

(2) Connect a synchroscope to the CN22-1 of the D/D Motor control P.C.B. Ass'y. Set the synchroscope to AC input.

(3) Check to insure that the peak to peak level of sine waveform is greater than 20 mV.

(4) Adjust the Thrust Screw until the height of the Supply Flywheel Ass'y becomes equal to that of the Take-up Flywheel Ass'y.

(5) Apply a quantity of lock tight paint to the Thrust Screws.

Note: Perform the following procedures, if the Flywheel Ass'y is replaced.

(a) Turn the Thrust Screw so that the gap between the Motor Coil Ass'y and the Flywheel Ass'y becomes approx. 1 mm.

(b) From the front side of the cassette deck, insert the Washer 3.1 mm FT (2.6 mm FT), then press the Washer 3 mm (Washer 2.5 mm) into the capstan shaft for supply (take-up) until the washer contacts with the flange sufficiently. Refer to Fig. 5.8.

(c) Perform the "Flywheel Ass'y Height Adjustment" in item 2.11.

2.12. Lubrication

ZX-9 is a lubrication-free cassette deck except when parts are replaced. Apply the following lubricant for each replaced part:

(1) LAUNA #100
- Capstan Shaft
- Pressure Roller Shaft
- Thrust Cap

(2) FLOIL GB-TS-1
- Reel Hub Shaft
- Thrust portion on the Capstan Shaft

FLOIL GB-TS-1, made by Kanto Chemicals Co., Ltd. in Japan.

We suggest that you use the above or equivalent type. If unavailable please contact Kanto Chemicals Co., Ltd., 2-7 Kanda Suda-cho Chiyoda-ku, Tokyo 101 Japan.

(3) Silicon Oil #3000 CST
- Air Damper Piston

Note: Excessive lubrication may cause defective damper action as the 0.2ϕ hole at the end of the cylinder may be filled with oil.

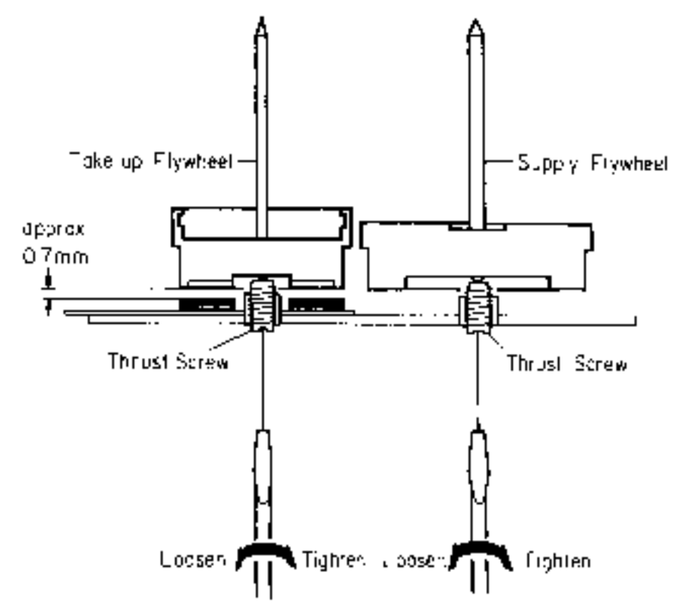

Fig. 2.20

3. PARTS LOCATION FOR ELECTRICAL ADJUSTMENT

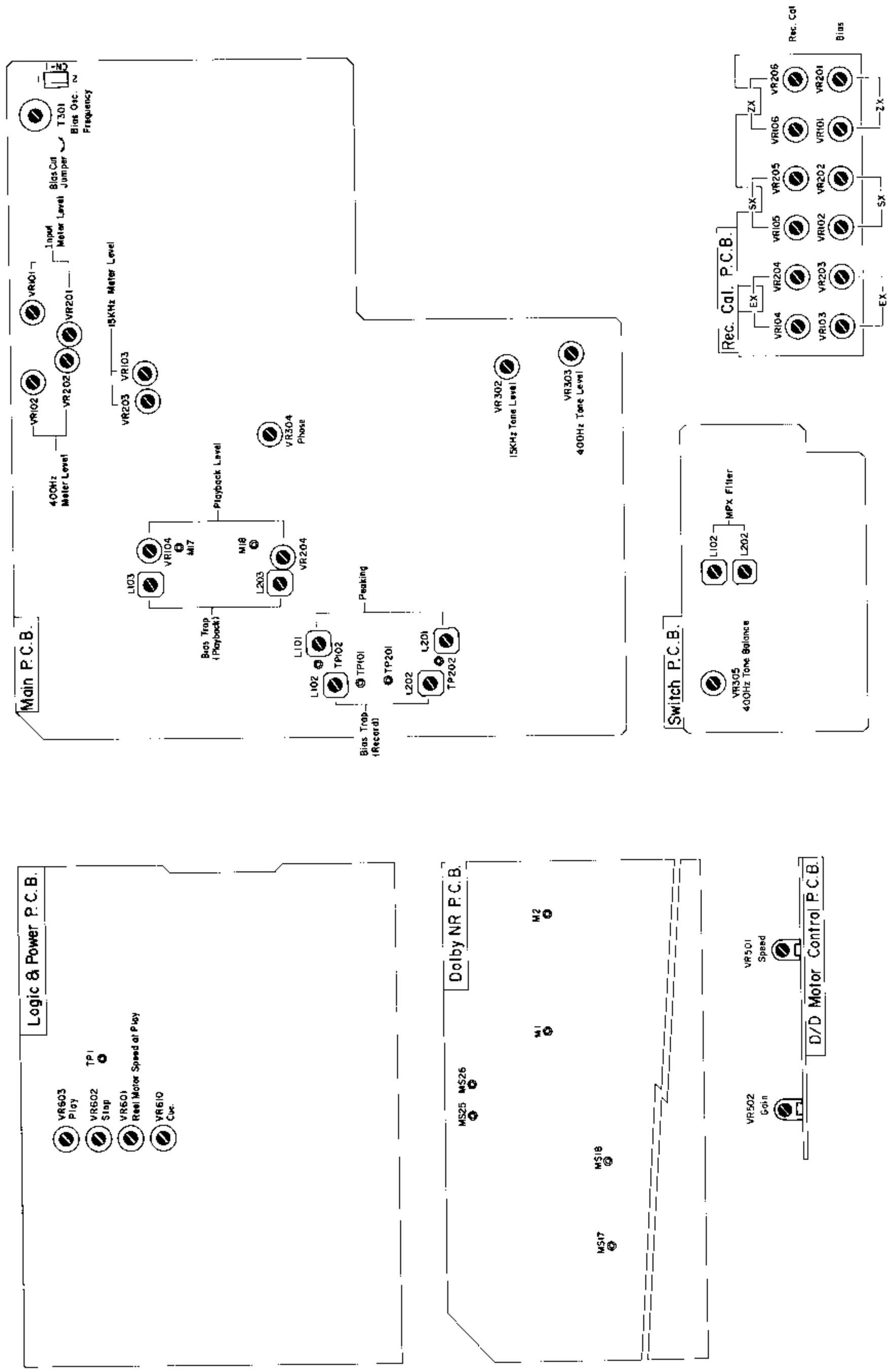

Fig. 3

4. ELECTRICAL ADJUSTMENTS AND MEASUREMENTS

Note: Electrical adjustment should be performed after mechanical adjustment is completed.

4.1. Adjustment and Measurement Instructions

STEP	ITEM	SIGNAL SOURCE	OUTPUT CONNECTION	MODE	ADJUST-MENT	REMARKS
1	Tape Speed and Motor Gain Adjustment	3 kHz Speed and Wow/Flutter Tape (DA09006B)	Frequency Counter and Wow/Flutter Meter to Output Jacks	Playback	D/D Motor Control P.C.B. VR501 (Speed) VR502 (Gain)	1. Adjust VR501 to obtain 3 kHz ±0.5% on the frequency counter. 2. Adjust VR502 to obtain the minimum reading on the wow/flutter meter. 3. Check to insure that the tape speed is 3 kHz ±0.5% on the frequency counter.
2	Tone Level Calibration	Tone 400 Hz and 15 kHz	VTVM to MS25, MS26 on Dolby NR P.C.B. and Output Jacks	Tone — 400 Hz/ 15 kHz Monitor SW — Source	Main P.C.B. VR303 (400 Hz) VR302 (15 kHz) Switch P.C.B. VR305 (400 Hz Balance)	1. Press the Level Calibration Start button to oscillate 400 Hz. 2. Adjust VR303 to obtain 90 mV on the VTVM at MS26 (R ch). 3. Adjust VR305 to obtain the same level as R ch on the VTVM at MS25. 4. Measure the reading on the VTVM at the Output Jacks. 5. Press the Bias Calibration Start button to oscillate 15 kHz. 6. Adjust VR302 to obtain 20 dB lower level than in 4 on the VTVM at the Output Jacks. 7. Press the Calibration Reset button to stop the tone oscillation.
3	Meter Level Calibration	400 Hz to Input Jacks and Tone 400 Hz and 15 kHz	VTVM to MS25, MS26 on Dolby NR P.C.B.	Tone — OFF/400 Hz/ 15 kHz Monitor SW — Source	Main P.C.B. VR101,VR201 VR102,VR202 VR103,VR203 VR303 (400 Hz) VR302 (15 kHz)	1. Feed in 400 Hz, then adjust the Input Level controls to obtain 90 mV —1.3 dB on the VTVM. 2. Adjust VR101 (VR201) so that the 0 dB segment of the level meter starts illuminating. 3. Press the Level Calibration Start button to oscillate 400 Hz, then adjust VR303 to obtain 90 mV —0.5 dB on the VTVM. 4. Adjust VR102 (VR202) so that the 0 dB segment of the level meter starts illuminating. 5. Press the Bias Calibration Start button to oscillate 15 kHz, then adjust VR302 to obtain 9 mV —0.5 dB on the VTVM. 6. Adjust VR103 (VR203) so that the 0 dB segment of the level meter starts illuminating. 7. Press the Calibration Reset button. 8. Re-adjust the tone level according to step 2 "Tone Level Calibration".
4	MPX Filter Adjustment	19 kHz ±100 Hz to Input Jacks	VTVM to Output Jacks	Monitor SW — Source Dolby NR SW — OFF MPX SW — IN	Switch P.C.B. L102,L202	1. Turn the Output level control fully clockwise (maximum position). 2. Adjust the Input Level controls to obtain 1 V on the VTVM. 3. Set the MPX Filter switch to IN, then adjust L102 (L202) to obtain the minimum reading on the VTVM (the minimum reading will be less than —30 dB).
5	Playback Head Track Alignment	1 kHz Track Alignment Tape (DA09007A)	VTVM to Output Jacks	Playback Monitor SW — Tape Eq. SW — 70 μs Dolby NR SW — OFF MPX SW — OUT	PH Height Gear	Adjust the PH Height Gear to obtain minimum readings of both channels on the VTVM. Refer to "Playback Head Height Adjustment and Azimuth Alignment" in item 2.8.
6	Playback Head Azimuth Alignment	15 kHz Azimuth Tape (DA09004A)	VTVM to Output Jacks	Playback Monitor SW — Tape Eq. SW — 70 μs Dolby NR SW — OFF MPX SW — OUT	Playback Head Azimuth Alignment Screw	Adjust the Playback Head Azimuth Alignment Screw to obtain maximum readings of both channels on the VTVM. Refer to "Playback Head Height Adjustment and Azimuth Alignment" in item 2.8. Note: Repeat steps 5 and 6 one or two times to obtain optimum performance.
7	Playback Level Calibration	400 Hz Level Tape (DA09005A)	VTVM to MS25, MS26 on Dolby NR P.C.B.	Same as above	Main P.C.B. VR104,VR204	Adjust VR104 (VR204) to obtain 90 mV on the VTVM.
8	Playback Frequency Response Adjustment	400 Hz Level Tape (DA09005A) 10 kHz PB Frequency Response Tape (DA09003A) 15 kHz PB Frequency Response Tape (DA09002A) 20 kHz PB Frequency Response Tape (DA09001A)	VTVM to Output Jacks	Playback Monitor SW — Tape Tape SW — SX Eq. SW — 70 μs Dolby NR SW — OFF MPX SW — OUT	Main P.C.B. R155,R255 R156,R256	1. Load a 400 Hz level tape and play it back. Adjust the Output level control to a certain level (0 dB for example). 2. Load 10 kHz, 15 kHz and 20 kHz PB frequency response tapes and adjust the playback head azimuth to obtain maximum levels on the VTVM with each tape. Short R155 (R255) or R156 (R256) to obtain the following levels against the level for the 400 Hz level tape. 10 kHz: —20 dB —1 dB to +2 dB 15 kHz: —20 dB —1 dB to +3 dB 20 kHz: —20 dB —1 dB to +4 dB 3. Conduct step 6 "Playback Head Azimuth Alignment". 4. If above is not sufficient, refer to "Playback Frequency Response Adjustment" in item 4.2.

STEP	ITEM	SIGNAL SOURCE	OUTPUT CONNECTION	MODE	ADJUST-MENT	REMARKS
9	Bias Oscillation Frequency and Erase Current Adjustment		VTVM across the additional 0.1 Ω resistor and Frequency Counter to CN1-1 on Main P.C.B.	Record, Pause Monitor SW — Source Tape SW — ZX Eq. SW — 70 μs Dolby NR SW — OFF MPX SW — OUT	Main P.C.B. T301 R309,R310	1. Connect an additional 0.1 Ω resistor in series to the Erase Head, then connect a VTVM across it. 2. Adjust T301 to obtain 105 kHz on the frequency counter. 3. Check the erase current by the VTVM. Erase current will be in a range of 310 mA to 400 mA (typically approx. 350 mA). If erase current is not sufficient, increase it by shorting R309 or R310. 4. After completion of the erase current adjustment, re-check the bias oscillation frequency. 5. Remove the additional 0.1 Ω resistor.
10	Record Amplifier Equalizer Adjustment	23 kHz (—20 dB) to Input Jacks	VTVM to TP101, TP201 on Main P.C.B.	Same as above	Main P.C.B. L101,L201	1. Remove the bias-cut-jumper from the dip side of the Main P.C.B. Ass'y. 2. Adjust L101 (L201) to obtain approx. +16 dB at 23 kHz on the VTVM. 3. Re-solder the bias-cut-jumper.
11	Bias Trap Adjustment (Record Amp.)	Remove input signals	VTVM to TP102, TP202 on Main P.C.B.	Same as above	Main P.C.B. L102,L202	Adjust L102 (L202) to obtain minimum reading on the VTVM.
12	Bias Trap Adjustment (Playback Amp.)	Remove input signals	VTVM to M17, M18 on Main P.C.B.	Record, Pause Monitor SW — Tape Tape SW — ZX Eq. SW — 70 μs Dolby NR SW — OFF	Main P.C.B. L103,L203	Adjust L103 (L203) to obtain minimum reading on the VTVM.
13	Record Head Height Adjustment and Azimuth Alignment	Tone 400 Hz and 15 kHz	VTVM to Output Jacks	Record, Playback Monitor SW — Tape Tape SW — SX Eq. SW — 70 μs Dolby NR SW — OFF	PH Height Gear Record Head Azimuth Alignment Screw Rec. Cal. P.C.B. (Level) VR105,VR205 (Bias Current) VR102,VR202 Main P.C.B. VR304 (Phase)	1. In Stop mode, press the Azimuth Alignment Start button to ON. Then adjust the Azimuth Alignment knob so that the Slide Lever of the Azimuth Alignment Wire is located at the center of the slit of the Azimuth Alignment Wire as shown in Fig. 2.14. After above adjustment, press the Azimuth Alignment Start button to OFF. 2. Record Head Height Adjustment: a. Load a reference SX tape (DA09025A), then press the Record and Play buttons. b. Press the Level Calibration Start button to oscillate 400 Hz. c. Adjust the Sensitivity Control VR105 (VR205) and Bias Control VR102 (VR202) to the center position. d. Adjust the RH Height Gear to obtain maximum readings of both channels on the VTVM. 3. Record Head Azimuth Alignment: a. Load a reference SX tape (DA09025A), then press the Record and Play buttons. b. Press the Bias Calibration Start button to oscillate 15 kHz. c. Adjust the Record Head Azimuth Alignment Screw to obtain maximum readings of both channels on the VTVM. d. Repeat 2 and 3 one or two times to obtain optimum performance. 4. Azimuth Phase Adjustment: a. Press the Record and Play buttons. b. Press the Azimuth Alignment Start button to ON, then adjust VR304 on the Main P.C.B. Ass'y so that the red indicator in the middle of the Azimuth Indicator is lit up.
14	Record Level Calibration and Recording Bias Current Adjustment	Tone 400 Hz and 15 kHz and 10 kHz/20 kHz (—20 dB) to Input Jacks	VTVM and Distortion Meter to Output Jacks	Record, Playback Tone — 400 Hz/ 15 kHz Monitor SW — Tape Tape SW — ZX/SX/ EX Eq. SW — 70 μs (ZX/SX) 120 μs (EX) Dolby NR SW — C-Type/B-Type/ OFF MPX SW — OUT	Rec. Cal. P.C.B. (Level) ZX: VR106,VR206 SX: VR105,VR205 EX: VR104,VR204 (Bias) ZX: VR101,VR201 SX: VR102,VR202 EX: VR103,VR203	Adjustment should be made in the order of ZX, SX and EX. 1. Set the Dolby NR switch to C-Type. 2. Load a reference ZX tape (DA09037A), reference SX tape (DA09025A) and reference EXII tape (DA09066A). 3. Adjust Sensitivity Controls VR106 (VR206) for ZX, VR105 (VR205) for SX and VR104 (VR204) for EXII to the maximum position. 4. Adjust Bias Controls VR101 (VR201) for ZX, VR102 (VR202) for SX and VR103 (VR203) for EXII to the maximum position. 5. Press the Record and Play buttons, then press the Azimuth Alignment Start button to ON. Turn the Azimuth Alignment Knob so that the red indicator in the middle of the Azimuth Indicator is lit up. After above adjustment, press the Azimuth Alignment Start button to OFF.

STEP	ITEM	SIGNAL SOURCE	OUTPUT CONNECTION	MODE	ADJUST-MENT	REMARKS
14 (continued)						6. Press the Record and Play buttons, then press the Level Calibration Start button to oscillate 400 Hz. 7. Adjust Sensitivity Controls VR106 (VR-206), VR105 (VR205) and VR104 (VR-204) to obtain 0 dB on the level meters. 8. Press the Bias Calibration Start button to oscillate 15 kHz. 9. Adjust Bias Controls VR101 (VR201), VR102 (VR202) and VR103 (VR203) to obtain 0 dB on the level meters. 10. Repeat 6 to 9 as above two or three times to obtain optimum performance. 11. Set the Dolby NR switch to B-Type/OFF. 12. Feed in 10 kHz (—20 dB) and 20 kHz (—20 dB), then record and play it back. Check to insure that the levels are within —20 dB ±2 dB against the levels in Dolby NR C-Type. 13. Check to insure whether the total harmonic distortion is less than 0.8% for ZX tape and 1.0% for SX and EXII tapes.
15	Overall Frequency Response Adjustment	400 Hz (0 dB) and 20 Hz to 20 kHz (—20 dB) to Input Jacks	VTVM to Output Jacks	Record, Playback Monitor SW — Source/Tape Tape SW — ZX/SX/EX Eq. SW — 70 μs (ZX/SX) 120 μs (EX) Dolby NR SW — OFF MPX SW — OUT	Main P.C.B. L101,L201	1. Perform the Azimuth Alignment operation as follows: a. Press the Record and Play buttons. b. Press the Azimuth Alignment Start button to ON. c. Turn the Azimuth Alignment Knob so that the red indicator in the middle of the Azimuth Indicator is lit up. d. After above adjustment, press the Azimuth Alignment Start button to OFF. 2. Set the Monitor switch to Source. 3. Feed in 400 Hz (0 dB) and adjust the Input Level controls to obtain 0 dB on the level meters. 4. Switch the Generator output level to —20 dB. 5. Set the Monitor switch to Tape, then record and play it back. 6. Feed in 20 Hz to 20 kHz (—20 dB), and check to insure whether the output levels are within —20 dB ±3 dB. 7. If above is not sufficient, adjust L101 (L201) to obtain approx. —20 dB on the VTVM at 20 kHz. 8. Conduct step 14 "Record Level Calibration and Recording Bias Current Adjustment". 9. If above is not sufficient, precise re-adjustment of step 8 "Playback Frequency Response", replacement of Playback Head or Record Head, check on item 2.10 "Tape Travelling Adjustment" or frequency response adjustment according to item 4.2 will be required.
16	Crosstalk Measurement	1 kHz to Input Jacks	1 kHz Band Pass Filter and VTVM to Output Jacks	Record and Playback Monitor SW — Tape Tape SW — ZX Eq. SW — 70 μs Dolby NR SW — OFF		1. Perform the Azimuth Alignment operation referring to step 15-1. 2. Erase a reference ZX tape with bulk eraser. 3. Adjust the Input Level controls to obtain 0 dB on the level meters, and record the signals on the reference tape. 4. Turn the cassette tape the other way round and play it back. 5. Measure the difference between 3 and 4.
17	Channel Separation Measurement	1 kHz to Input Jacks	Same as above	Same as above		1. Perform the Azimuth Alignment operation referring to step 15-1. 2. Erase a reference ZX tape with bulk eraser. 3. Adjust the L ch (R ch) Input Level control to obtain 0 dB on the level meters, and close the R ch (L ch) Input Level control. 4. Record and play it back, then measure the R ch (L ch) level.
18	Erasure Measurement	1 kHz to Input Jacks	Same as above	Same as above		1. Perform the Azimuth Alignment operation referring to step 15-1. 2. Erase a reference ZX tape with bulk eraser. 3. Adjust the Input Level controls to obtain 0 dB on the level meters, and record the signals on the reference tape. 4. Rewind the tape then close the Input Level controls. 5. Record and play it back, then measure the difference between 3 and 4.

STEP	ITEM	SIGNAL SOURCE	OUTPUT CONNECTION	MODE	ADJUST-MENT	REMARKS
19	Signal to Noise Ratio Measure-ment	400 Hz to Input Jacks	VTVM and Distortion Meter to Output Jacks	Record and Playback Monitor SW — Tape Tape SW — ZX Eq. SW — 70 μs Dolby NR SW — B-Type/C-Type		1. Perform the Azimuth Alignment operation referring to step 15-1. 2. Feed in 400 Hz and record and play it back. 3. Adjust the Input Level controls to obtain 3% total harmonic distortion in Playback mode. 4. Close the Input Level controls, then record. 5. After rewound, play back and check the output level difference between 3 and 4. Note: The filter of IHF-A curve shall be used in the measurements.
20	Total Harmonic Distortion Measure-ment	400 Hz to Input Jacks	Distortion Meter to Output Jacks	Record and Playback Monitor SW — Tape Tape SW — ZX/SX/EX Eq. SW — 70 μs (ZX/SX) 120 μs (EX) Dolby NR SW — OFF		1. Perform the Azimuth Alignment operation referring to step 15-1. 2. Adjust the Input Level controls to obtain 0 dB on the level meters. 3. Record and play it back. 4. Read the distortion meter and check to insure that the distortion is less than 0.8% for ZX tape and 1.0% for SX and EXII tapes.
21	Wow/ Flutter Measure-ment	3 kHz Speed and Wow/ Flutter Tape (DA09006B)	Wow/Flutter Meter to Output Jacks	Playback Monitor SW — Tape Eq. SW — 70 μs		Play back and read the wow/flutter meter.

4.2. Frequency Response Adjustment

(1) Playback Frequency Response Adjustment

Refer to Figs. 4.2.1 and 4.2.2.

(a) Level Adjustment (for middle frequency response)

This adjustment will be required if playback level is not sufficient when 10 kHz PB frequency response tape is played back as referred to step 8 in 4.1 "Adjustment and Measurement Instructions".

Playback equalization level is varied by the modification of R159 (R259) on the Main P.C.B. Ass'y and R154 (R254) on the Dolby NR P.C.B. Ass'y.

Following are the details for level modifications:

Approx. +1 dB . . . . . R159 (R259): 8.66K
R154 (R254): 6.49K
0 dB . . . . . R159 (R259): 8.06K
R154 (R254): 6.98K
Approx. —1 dB . . . . . R159 (R259): 7.32K
R154 (R254): 7.87K

(b) Peaking Adjustment (for high frequency response)

This adjustment will be required if playback level is not sufficient when 20 kHz PB frequency response tape is played back as referred to step 8 in 4.1 "Adjustment and Measurement Instructions". Peaking portion compensates the gap loss of the playback head. Peaking level is varied by the short circuit of R155 (R255) or R156 (R256) on the Main P.C.B. Ass'y as illustrated in Fig. 4.2.2.

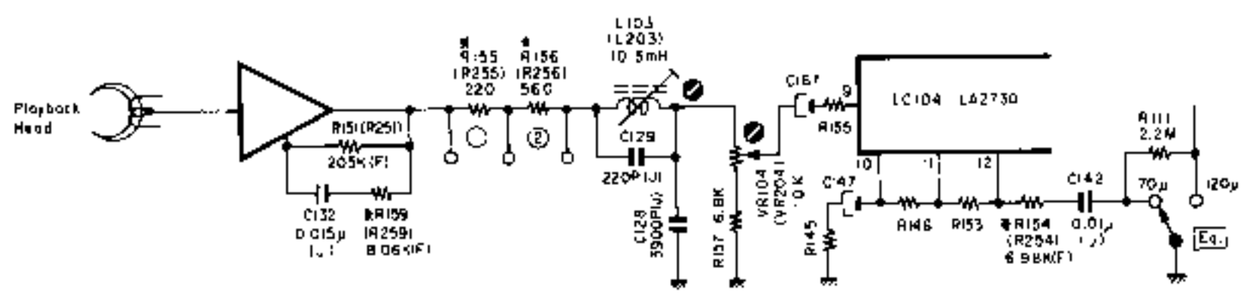

Fig. 4.2.1 Playback Amp.

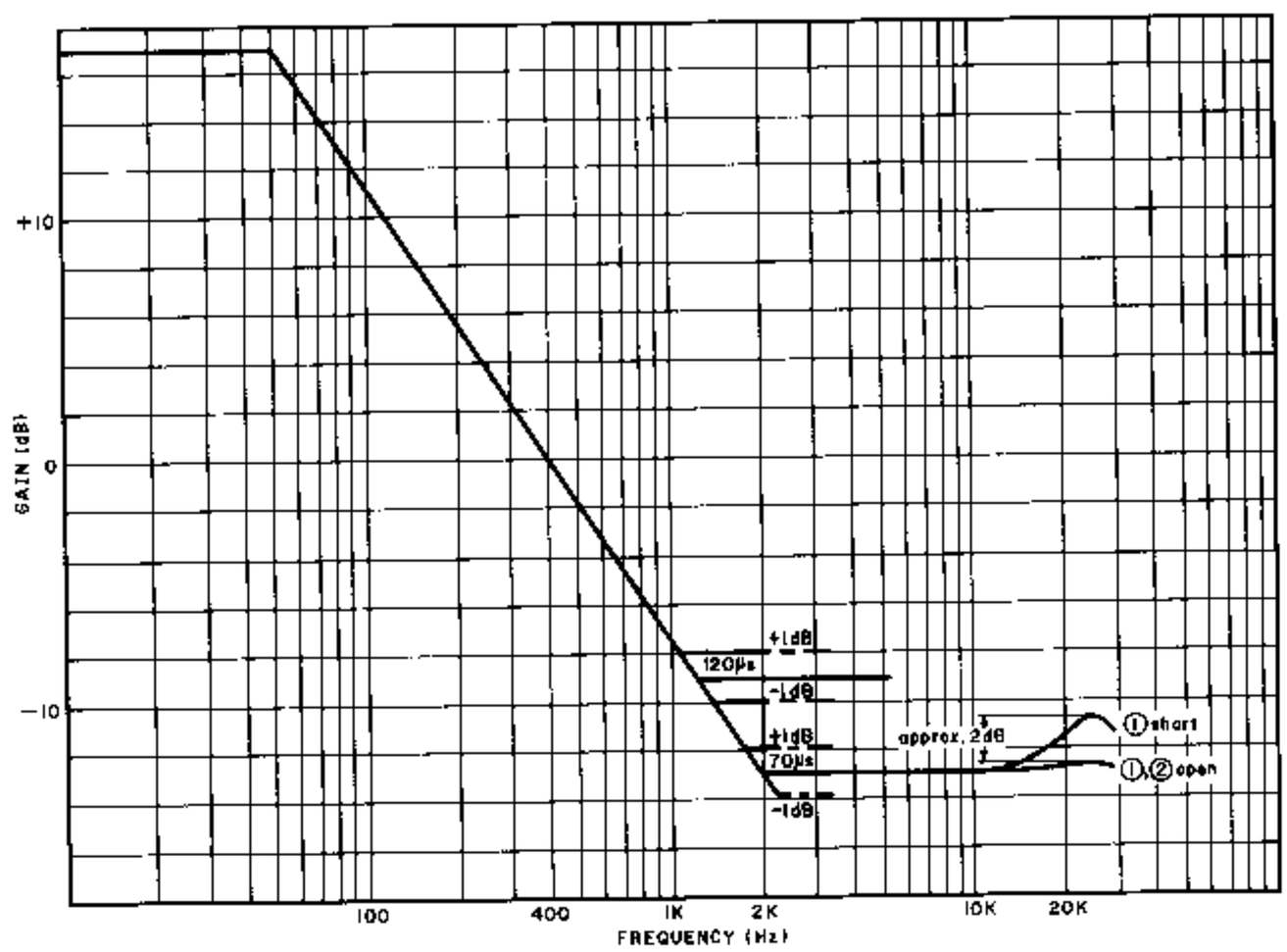

Fig. 4.2.2 Playback Equalization Curve

(2) Record Current Frequency Response Adjustment

Record eq. peaking is adjusted for compensating the overall frequency response when playback frequency response is completed.

Normally however peaking frequency is pre-adjusted to approx. 23 kHz in Record mode. Refer to Fig. 4.2.3.

(a) For ZX Tape

1) Feed in 400 Hz (0 dB), then record and play it back. Adjust bias current by VR106 (VR206) on the Record Cal. P.C.B. Ass'y to obtain a 0.8% distortion.
2) Feed in 10 kHz and 400 Hz (—20 dB), then record and play them back.
   Check the difference of the levels between 10 kHz and 400 Hz, and mount an additional capacitor in parallel with C101 (C201) on the Main P.C.B. Ass'y from the dip side of the printed circuit board depending upon the difference of the levels against 400 Hz.
   Refer to Fig. 4.2.4.

Level Difference	Addition	Total
0 dB	0	820 pF
—1 dB	220 pF	1040 pF

3) Feed in 22 kHz (—20 dB), then record and play it back. Adjust record peaking coil L101 (L201) to obtain flat overall frequency response.

(b) For SX Tape

1) Feed in 15 kHz and 400 Hz (—20 dB), then record and play them back.
   Adjust Bias current by VR105 (VR205) on the Record Cal. P.C.B. Ass'y to obtain flat overall frequency response.
2) Feed in 20 kHz and 400 Hz (—20 dB), then record and play them back.
   And check to insure that the overall frequency response is flat.

(c) For EXII Tape

1) Feed in 15 kHz and 400 Hz (—20 dB), then record and play them back.
   Adjust bias current by VR104 (VR204) on the Record Cal. P.C.B. Ass'y to obtain flat overall frequency response.
2) Feed in 20 kHz and 400 Hz (—20 dB), then record and play them back.
   And check to insure that the overall frequency response is flat.

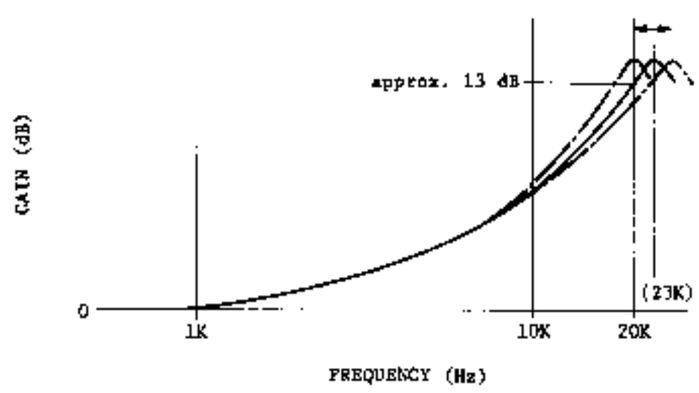

Fig. 4.2.3

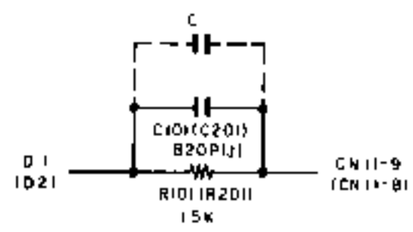

Fig. 4.2.4

4.3. Dolby NR Circuit Check

Dolby NR circuit incorporates Dolby NR ICs which have no adjustment point.

Perform the following checks and make sure that the IC operates accurately, i.e., accuracy of frequency response through IC.

4.3.1. Dolby NR B-Type Circuit Check

(1) Playback Dolby NR Circuit

Signal Source: 1.4 kHz to pin No. M17 (M18) on Dolby NR P.C.B.
Output Connection: VTVM to MS25 (MS26) on Dolby NR P.C.B.
Mode: Stop
Monitor SW — Tape
Dolby NR SW — B-Type/OFF

(a) Connect a VTVM to MS25 (MS26) on the Dolby NR P.C.B. Ass'y.
(b) Set the Dolby NR switch to B-Type.
Feed in 1.4 kHz to pin No. M17 (M18) and adjust the generator output control to obtain 9 mV on the VTVM.
(c) Set the Dolby NR switch to OFF.
Check to insure that the reading is +3.2 dB ±1.5 dB on the VTVM.

(2) Record Dolby NR Circuit

Signal Source: 1.4 kHz to Input Jacks
Output Connection: VTVM to MS25 (MS26) and M1 (M2) on Dolby NR P.C.B.
Mode: Stop
Monitor SW — Source
Dolby NR SW — B-Type/OFF

(a) Connect a VTVM to MS25 (MS26) on the Dolby NR P.C.B. Ass'y.
(b) Feed in 1.4 kHz and adjust the Input Level controls to obtain 9 mV/2.85 mV on the VTVM.
(c) Remove the VTVM from MS25 (MS26) and reconnect it to M1 (M2) on the Dolby NR P.C.B. Ass'y.
(d) Check to insure that the reading at M1 (M2) corresponds to the following with Dolby NR switch OFF and B-Type.

Input Level at MS25, MS26	Level at M1 (IC102-16), M2 (IC202-16)	
	Dolby NR OFF	Dolby NR B-Type
9 mV	0 dB	+3.2 dB ±1.5 dB
2.85 mV	0 dB	+8.2 dB ±1.5 dB

4.3.2. Dolby NR C-Type Circuit Check

(1) Playback Dolby NR Circuit

Signal Source: 1.4 kHz to pin No. M17 (M18) on Dolby NR P.C.B.
Output Connection: VTVM to MS25 (MS26) on Dolby NR P.C.B.
Mode: Stop
Monitor SW — Tape
Dolby NR SW — C-Type/OFF

(a) Connect a VTVM to MS25 (MS26) on the Dolby NR P.C.B. Ass'y.
(b) Set the Dolby NR switch to C-Type.
Feed in 1.4 kHz to pin No. M17 (M18) and adjust the generator output control to obtain 9 mV on the VTVM.
(c) Set the Dolby NR switch to OFF.
Check to insure that the reading is +6.5 dB ±1.5 dB on the VTVM.

(2) Record Dolby NR Circuit

Signal Source: 1.4 kHz to Input Jacks
Output Connection: VTVM to MS25 (MS26) and M1 (M2) on Dolby NR P.C.B.
Mode: Stop
Monitor SW — Source
Dolby NR SW — C-Type/OFF

(a) Connect a VTVM to MS25 (MS26) on the Dolby NR P.C.B. Ass'y.
(b) Feed in 1.4 kHz and adjust the Input Level controls to obtain 9 mV/2.85 mV on the VTVM.
(c) Remove the VTVM from MS25 (MS26) and reconnect it to M1 (M2) on the Dolby NR P.C.B. Ass'y.
(d) Check to insure that the reading at M1 (M2) corresponds to the following with Dolby NR switch OFF and C-Type.

Input Level at MS25, MS26	Level at M1 (IC102-16), M2 (IC202-16)	
	Dolby NR OFF	Dolby NR C-Type
9 mV	0 dB	+6.5 dB ±1.5 dB
2.85 mV	0 dB	+11.4 dB ±1.5 dB

5. MECHANISM ASS'Y AND PARTS LIST

5.1. Synthesis

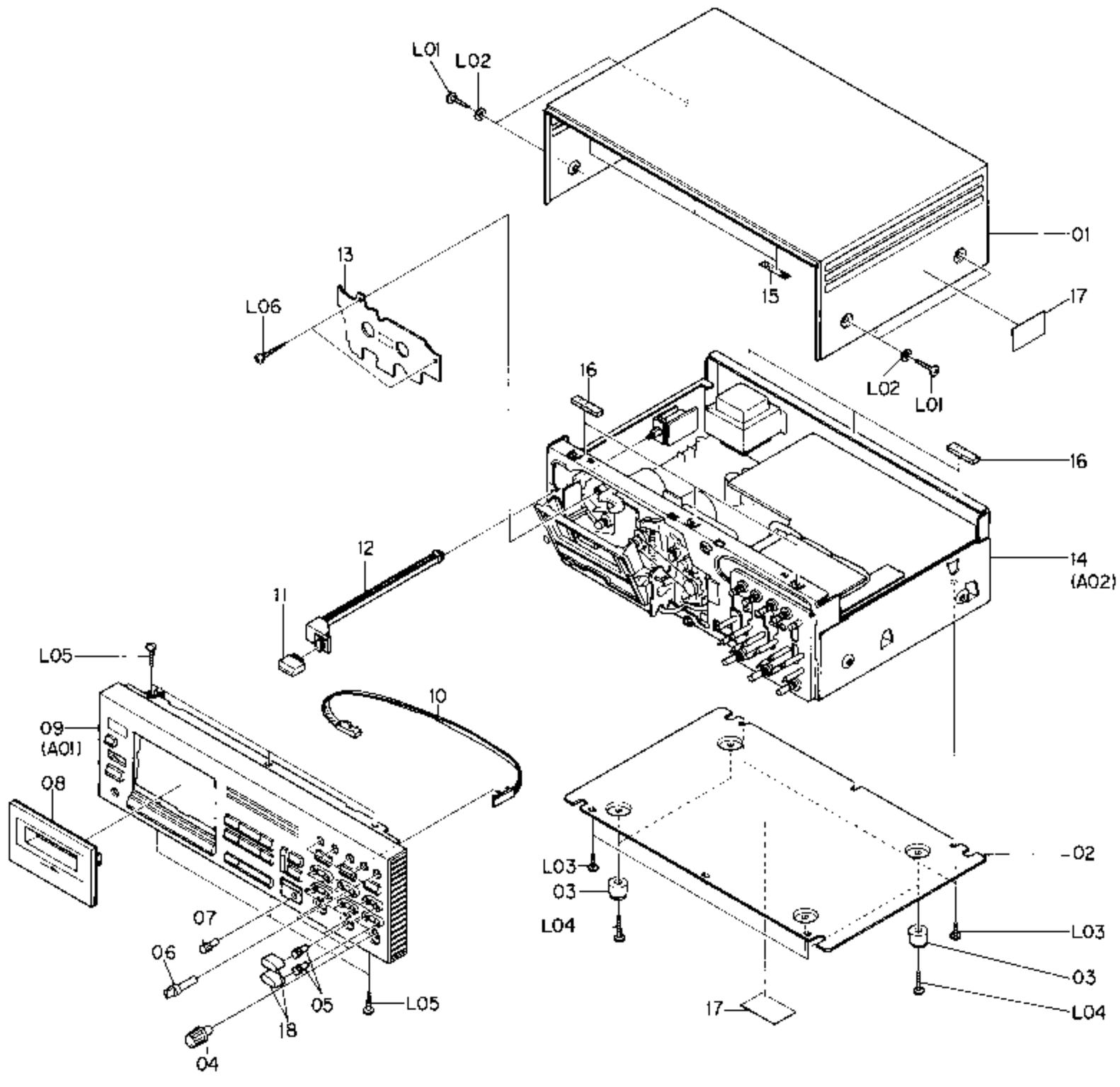

Fig. 5.1

Schematic Ref. No.	Part No.	Description	Q'ty	Schematic Ref. No.	Part No.	Description	Q'ty
	HA04315A	Synthesis (Japan)	1	16	0J04550A	Top Cover Cushion	6
	HA04319A	Synthesis (U.S.A. & Canada)	1	17	0M04377A	Caution Label (U.S.A. & Canada)	2
	HA04318A	Synthesis (220V Class 2)	1	18	0H04065C	Control Volume Cap	6
	HA04314A	Synthesis (UK)	1	L01	0E00915A	BT M4x8 ⊕Binding (Black Chromate)	4
	HA04317A	Synthesis (Australia)	1				
	HA04316A	Synthesis (Others)	1	L02	0E00736A	Washer 4mm (Black Chromate)	4
		Serial No.: A12501001 -		L03	0E00857A	BT M3x6 ⊕Binding	9
				L04	0E00865A	BT M3x10 ⊕Binding	4
01	0H04010A	Top Cover	1	L05	0E00921A	BT M3x8 ⊕Binding (Black Chromate)	5
02	0J04477A	Bottom Cover	1				
03	0J03564A	Leg T-H	4	L06	0E00950A	BT M3x14 ⊕Pan (Black Chromate)	2
04	0H04097A	Control Volume Knob	3				
05	HA04093A	Calibration Volume Knob	12				
06	HA04096A	Function Knob	5				
07	0H04083A	Azimuth Alignment Knob	1				
08	HA04321A	Cassette Case Ass'y	1				
09	HA04320A	Front Panel Ass'y	1				
10	0C08311A	Azimuth Wire	1				
11	HA04091A	Power Switch Knob	1				
12	0J04490B	Power Switch Joint	1				
13	HA04329A	Cover Plate Ass'y	1				
14	JA03938A	Synthesis Mechanism Ass'y (Japan)	1				
	JA03942A	Synthesis Mechanism Ass'y (U.S.A. & Canada)	1				
	JA03941A	Synthesis Mechanism Ass'y (220V Class 2)	1				
	JA03937A	Synthesis Mechanism Ass'y (UK)	1				
	JA03940A	Synthesis Mechanism Ass'y (Australia)	1				
	JA03939A	Synthesis Mechanism Ass'y (Others)	1				
15	0J04080A	Top Cover Himelon	3				

5.2. Front Panel Ass'y (A01)

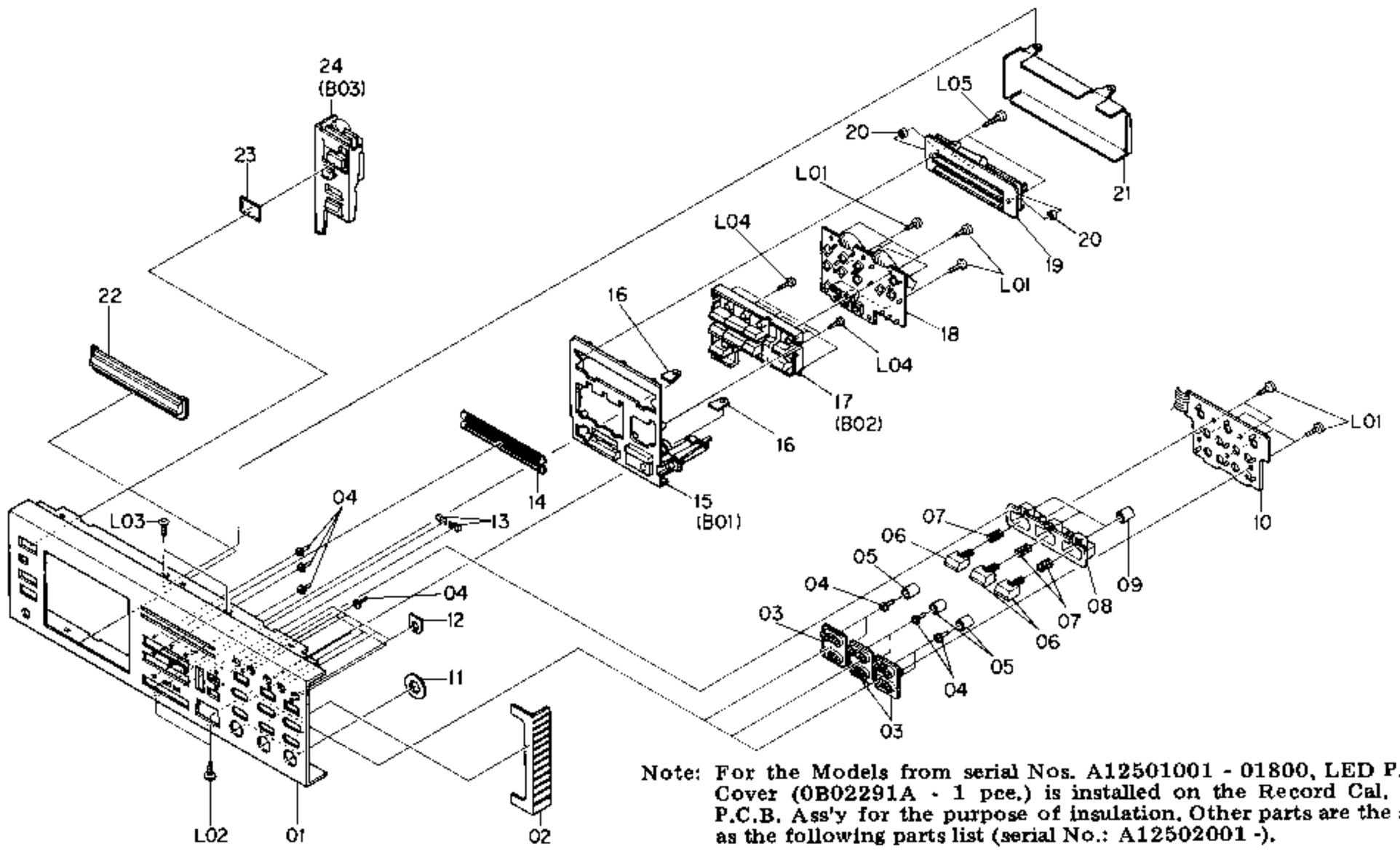

Note: For the Models from serial Nos. A12501001 - 01800, LED P.C.B. Cover (0B02291A - 1 pce.) is installed on the Record Cal. LED P.C.B. Ass'y for the purpose of insulation. Other parts are the same as the following parts list (serial No.: A12502001 -).

Fig. 5.2

Schematic Ref. No.	Part No.	Description	Q'ty
A01	HA04320A	Front Panel Ass'y Serial No.: A12502001 -	1
01	0H04095A	Front Panel	1
02	0H04001B	Side Cover	1
03	0H04056B	Cal. Volume Flange	3
04	0H03999A	LED Lens	12
05	0J04496A	Cal. Volume Reflector	6
06	0H04089A	Selector Knob	3
07	0J04497A	Selector Spring	3
08	0H04055B	Selector Flange	1
09	0J04541A	Selector Reflector	3
10	BA04545A	Record Cal. LED P.C.B. Ass'y	1
11	0H04002A	Volume Flange	3
12	0H04029A	Function Flange	5
13	0H04031A	Fader Lens	2
14	0H04000A	Meter Cover	1
15	HA04328A	Front Escutcheon A Ass'y	1
16	0J04486A	Panel Holder	2
17	HA04311A	Control House Ass'y	1
18	BA04544A	Control Switch P.C.B. Ass'y	1
19	BA04543A	Indicator P.C.B. Ass'y	1
20	0J04454A	Indicator P.C.B. Stud	2
21	0J04458A	Meter Shield Case	1
22	0H04023B	Cover Escutcheon	1
23	0H04030A	Counter Lens	1
24	HA04310A	Front Escutcheon B Ass'y	1
L01	0E00862A	BT M3x6 ⊕Pan	11
L02	0E00593A	M3x6 ⊕Binding (Bronze)	2
L03	0E00505A	M3x6 ⊕Countersunk	2
L04	0E00859A	BT M2.6x6 ⊕Binding	6
L05	0E00831A	BT M3x10 ⊕Pan	2
A02	JA03938A	Chassis Ass'y (Japan)	1
	JA03942A	Chassis Ass'y (U.S.A. & Canada)	1
	JA03941A	Chassis Ass'y (220V Class 2)	1
	JA03937A	Chassis Ass'y (UK)	1
	JA03940A	Chassis Ass'y (Australia)	1
	JA03939A	Chassis Ass'y (Others)	1
		Serial No.: A12501001 -	
01	JA03893A	Headphone Holder Ass'y	1
02	0J04135C	Mechanism Bracket	1
03	0J04478A	Sub Chassis	1
04	BA04546A	Volume P.C.B. Ass'y	1
05	BA04770A	Switch P.C.B. Ass'y	1
06	0J04476C	Front Chassis	1

Schematic Ref. No.	Part No.	Description	Q'ty
07	BA04547A	Azimuth Switch P.C.B. Ass'y	1
08	0J04502B	Cal. Volume Joint	12
09	BA04542A	Record Cal. P.C.B. Ass'y	1
10	0B02228B	Cassette Case Lamp	1
11	0J04506C	Lamp Holder	1
12	0J04469A	Cassette Case Plate	1
13	CA08389A	Mechanism Ass'y ZX-9	1
14	BA04618A	Power Switch P.C.B. Ass'y (U.S.A. & Canada)	1
	BA04620A	Power Switch P.C.B. Ass'y (UK, 220V Class 2, Australia & Others)	1
	BA04594A	Power Switch P.C.B. Ass'y (Japan)	1
15	BA04763A	Main P.C.B. Ass'y	1
16	0J04470B	Side Chassis L	1
17	0J04472B	Center Chassis	1
18	0J04471B	Side Chassis R	1
19	BA04766A	Dolby NR P.C.B. Ass'y	1
20	0B08771A	Hinge	2
21	BA04774A	Logic & Power P.C.B. Ass'y (Japan)	1
	BA04775A	Logic & Power P.C.B. Ass'y (U.S.A., Canada & Others)	1
	BA04776A	Logic & Power P.C.B. Ass'y (UK, 220V Class 2 & Australia)	1
22	HA04323A	Rear Panel Ass'y (Japan)	1
	HA04327A	Rear Panel Ass'y (U.S.A. & Canada)	1
	HA04326A	Rear Panel Ass'y (220V Class 2)	1
	HA04322A	Rear Panel Ass'y (UK)	1
	HA04325A	Rear Panel Ass'y (Australia)	1
	HA04324A	Rear Panel Ass'y (Others)	1
23	0B08515A	Insu-Lock	25
24	0B02542A	Cassette Case Lamp P.C.B.	1
25	0J04561A	Headphone Jack Cover	1
L01	0E00857A	BT M3x6 ⊕Binding	31
L02	0E00944A	BT M4x15 ⊕Binding (Black Chromate)	3
L03	0E00924A	BT M4x16 ⊕Binding (Chromate)	1
L04	0E00078A	Washer 4mm Toothed Lock	4
L05	0E00612A	BT M3x6 ⊕Pan (2A)	5
L06	0E00962A	BT M2x6 ⊕Binding (Black Chromate)	1
L07	0E00860A	BT M3x6 ⊕Binding (Black Chromate)	4
L08	—	Switch Nut A	(6)

5.3. Chassis Ass'y (A02)

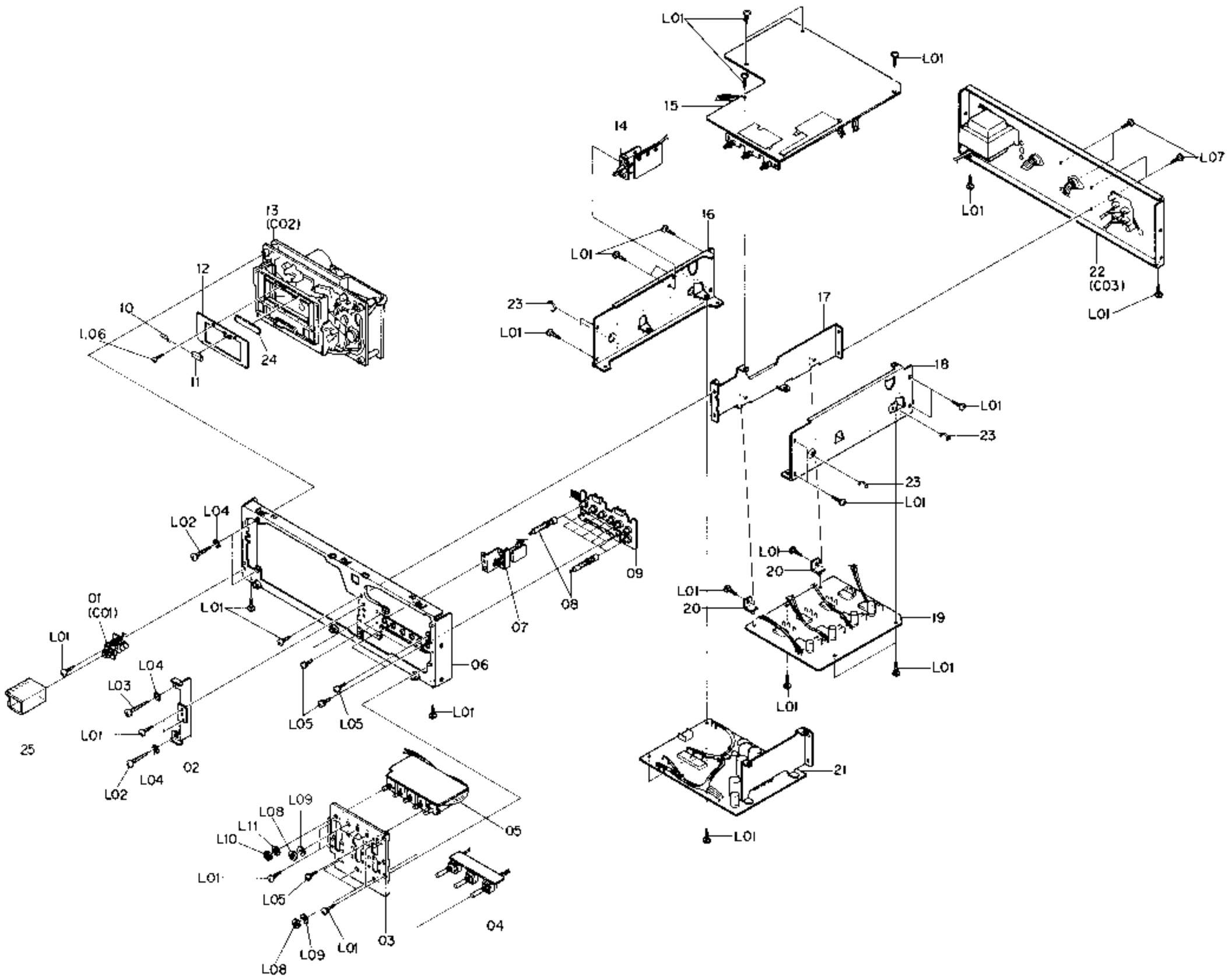

Fig. 5.3

Schematic Ref. No.	Part No.	Description	Q'ty
L09	—	Switch Washer A	(6)
L10	—	Switch Nut B	(1)
L11	—	Switch Washer B	(1)

5.4. Front Escutcheon A Ass'y (B01)

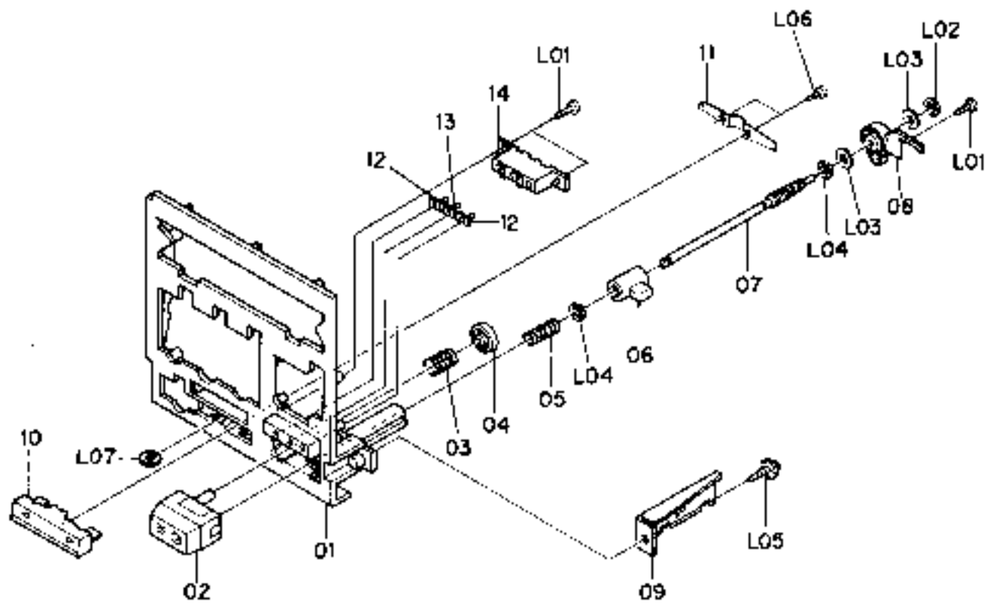

Fig. 5.4

5.5. Control House Ass'y (B02)

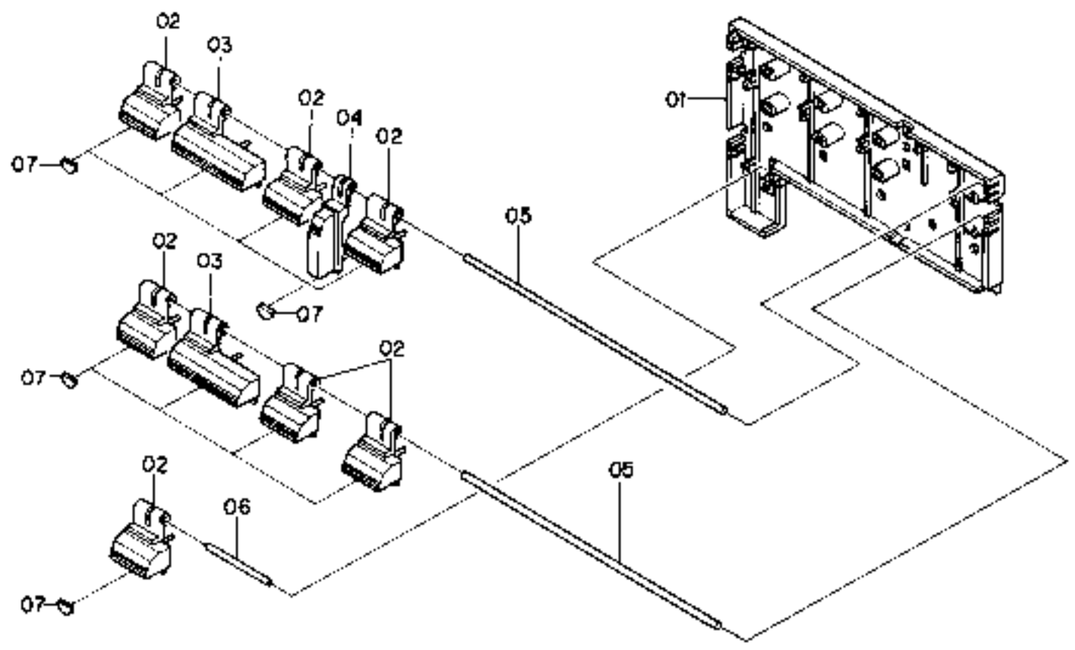

Fig. 5.5

Schematic Ref. No.	Part No.	Description	Q'ty
B01	HA04328A	Front Escutcheon A Ass'y Serial No.: A12501001 -	1
01	0H04099A	Front Escutcheon G	1
02	HA04232A	Adjustment Cover Ass'y	1
03	0J04459A	Adjustment Knob Spring	1
04	0J04460B	Adjustment Flange Stopper	1
05	0J04464A	Adjustment Bar Spring	1
06	0J04462B	Adjustment Slide Joint	1
07	0J04463A	Adjustment Rod	1
08	0J04461B	Adjustment Rod Stopper	1
09	0J04465A	Adjustment Wire Holder	1
10	0H04090A	Fader Knob	1
11	0J04467B	Fader Spring	1
12	0H04005A	Adjustment Lens A	2
13	0H04006A	Adjustment Lens B	1
14	0J04466A	Adjustment Lamp House	1
L01	0E00961A	BT M2x5 ⊕ Binding (Chromate)	3
L02	0E00874A	Stopper Ring CS 2mm	1
L03	0J04061A	Washer FT20	2
L04	0E00222A	E-Ring 2mm	2
L05	0E00920A	M3x6 ⊕ Pan Polywave	1
L06	0E00853A	BT M2x3 ⊕ Pan	2
L07	0J04586A	Fader Washer	1
B02	HA04311A	Control House Ass'y Serial No.: A12501001 -	1
01	0H04016A	Control House	1
02	0H04086A	Control Knob A	7
03	0H04087A	Control Knob B	2
04	0H04088A	Control Knob C	1
05	0J04493A	Shaft A	2
06	0J04494A	Shaft B	1
07	0J04495A	Control Cushion	10
B03	HA04310A	Front Escutcheon B Ass'y Serial No.: A12501001 -	1
01	0H04012C	Front Escutcheon B	1
02	0H04085A	Eject Knob	1
03	0J04488A	Eject Spring	1
04	0J04487B	Eject Stopper	1
05	0H04084A	Reset Switch Knob	1
06	0J04489B	Reset Cushion	2
07	BA04548A	Counter P.C.B. Ass'y	1
08	BA04642A	Counter Control P.C.B. Ass'y	1
09	0J04491A	Counter P.C.B. Stud	1
10	0J04492B	Counter Shield Case	1
11	0J04327A	Counter Himelon	1
12	0J04563C	Counter P.C.B. Insulator	1
L01	0E00862A	BT M3x6 ⊕ Pan	2
L02	0E00883A	BT M3x18 ⊕ Pan	1
L03	0E00037A	Earth Lug B-5	1
C01	JA03893A	Headphone Holder Ass'y Serial No.: A12501001 -	1
01	0B08511A	Headphone Jack	1
02	0J04474A	Headphone Jack Holder	1
L01	—	Headphone Jack Washer	(1)
L02	—	Headphone Jack Nut	(1)

5.6. Front Escutcheon B Ass'y (B03)

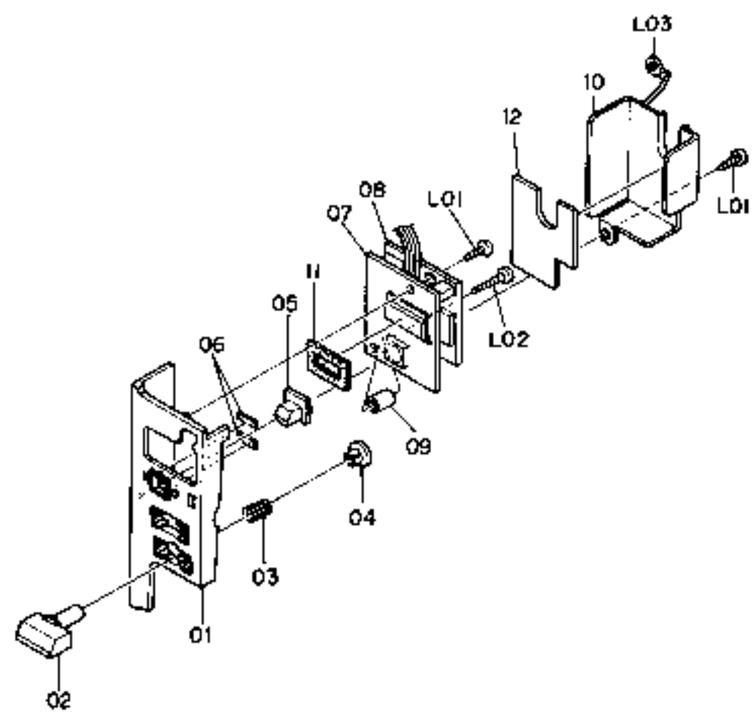

Fig. 5.6

5.7. Headphone Holder Ass'y (C01)

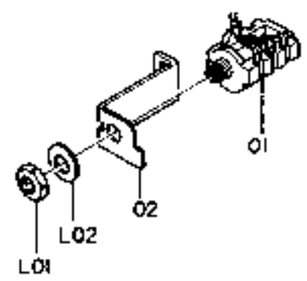

Fig. 5.7

5.8. Mechanism Ass'y ZX-9 (C02)

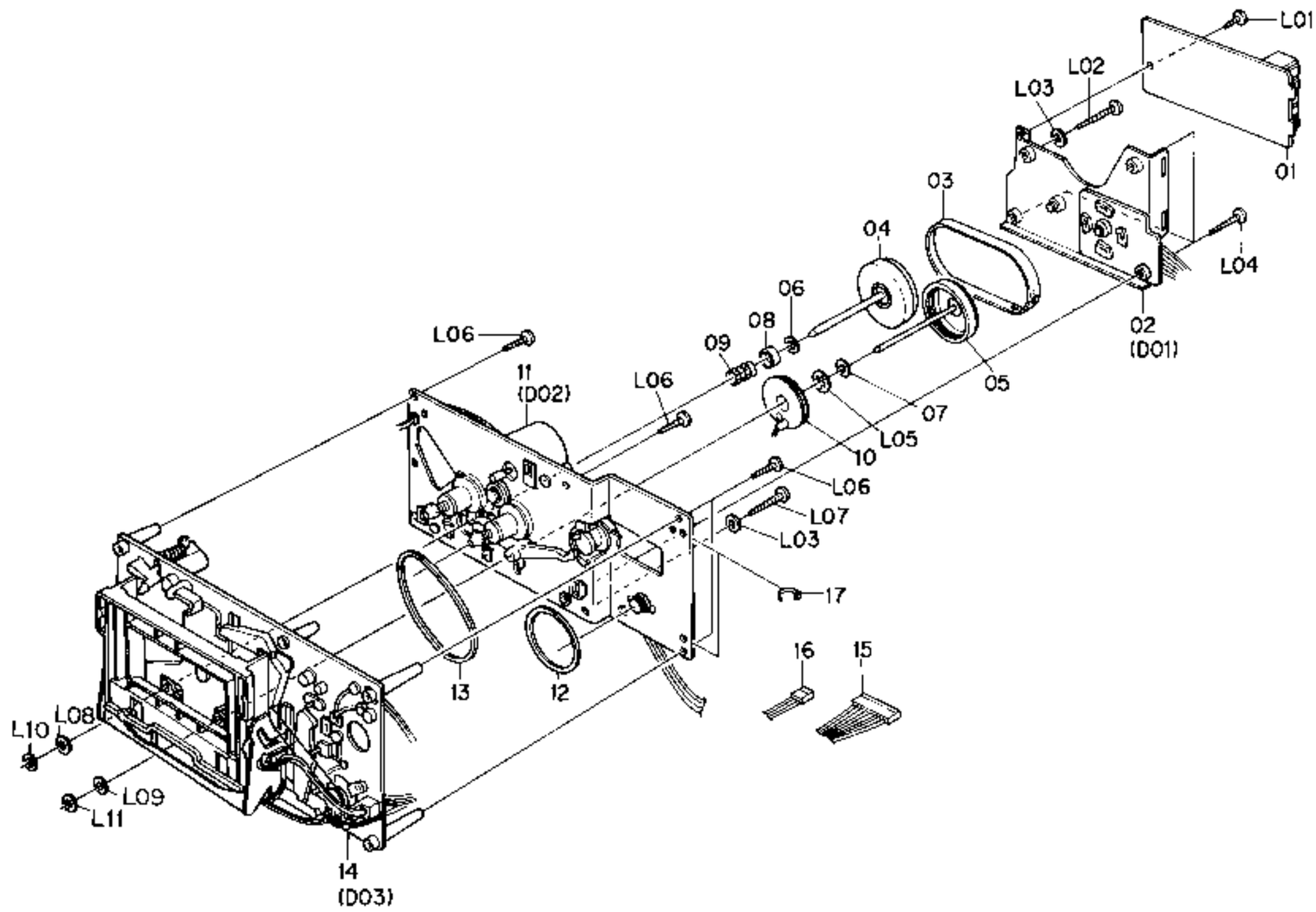

Fig. 5.8

Schematic Ref. No.	Part No.	Description	Q'ty
C02	CA08389A	Mechanism Ass'y ZX-9 Serial No.: A12501001 -	1
01	BA04777A	D/D Motor Control P.C.B. Ass'y	1
02	CA08384A	Flywheel Holder Ass'y	1
03	0C08334A	Capstan Belt	1
04	CA08380B	Supply Flywheel Ass'y	1
05	CA08390B	Take-up Flywheel Ass'y	1
06	0C08021B	Thrust Washer 3.1mm	1
07	0C08020B	Thrust Washer 2.6mm	1
08	0C08243A	Flange Thrust Cap	1
09	0C08244A	Flange Thrust Spring	1
10	CA08391A	Sensor Coil Sub Ass'y	1
11	CA08343A	Sub Mechanism Chassis Ass'y	1
12	0C08099B	Control Motor Belt	1
13	0C08098B	Counter Belt B	1
14	CA08385A	Main Mechanism Chassis Ass'y	1
15	0B08943B	9P-H Connector	1
16	0B08672A	3P-H Connector	1
17	0B08515A	Insu-Lock	10
—	0M04388A	Mechanism Serial No. Seal	1
L01	0E00857A	BT M3x6 ⊕ Binding	1
L02	0E00834A	BT M3x30 ⊕ Pan	1
L03	0E00178A	Washer 3mm	2
L04	0E00833A	BT M3x20 ⊕ Pan	3
L05	0E03023A	Stopper Ring CS 8mm	1
L06	0E00883A	BT M3x18 ⊕ Pan	5
L07	0E00835A	BT M3x25 ⊕ Pan	1
L08	0C08347A	Washer 3.1 mm FT	1
L09	0C08348A	Washer 2.6 mm FT	1
L10	0C08345A	Capstan Washer 3 mm	1
L11	0C08346A	Capstan Washer 2.5 mm	1

5.9. Rear Panel Ass'y (C03)

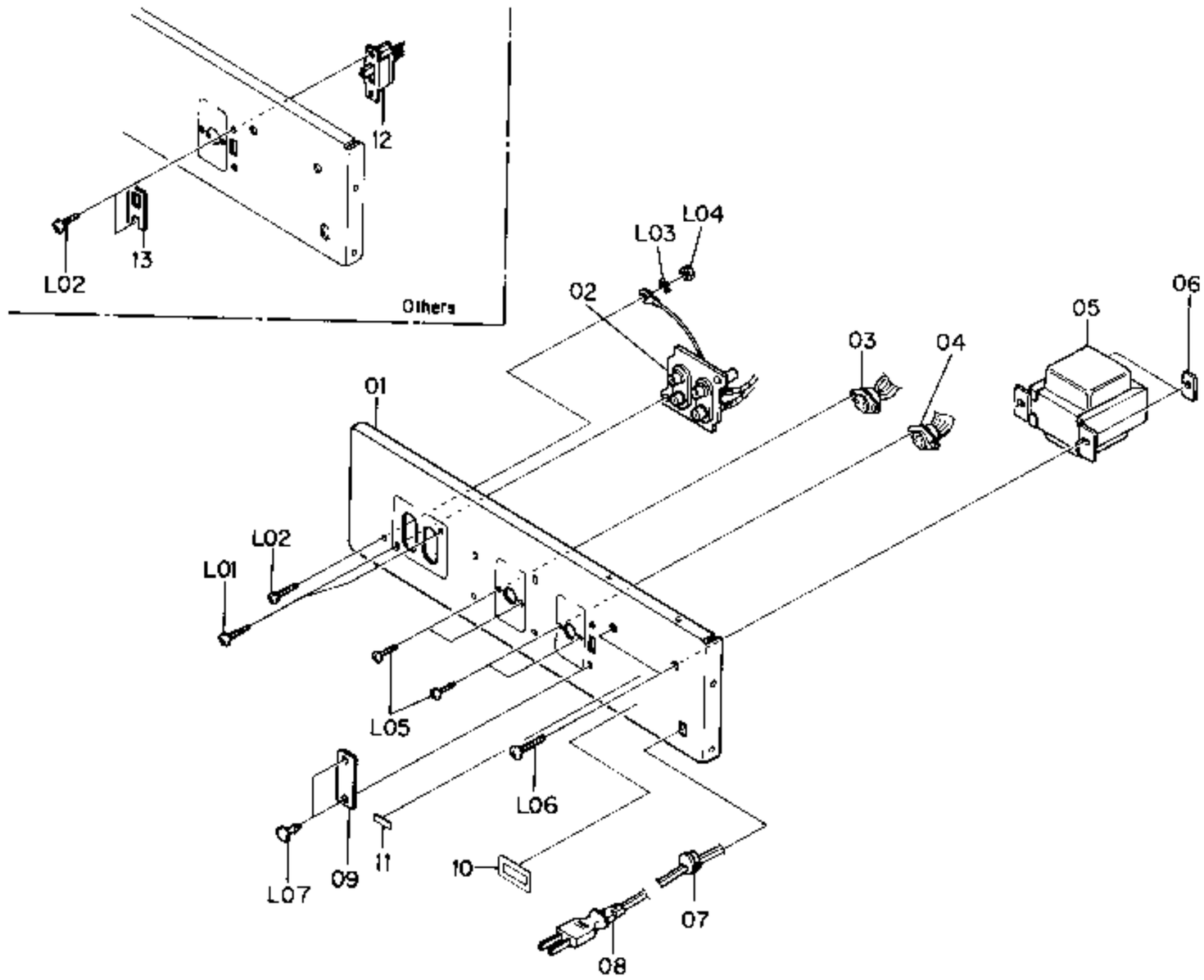

Fig. 5.9

5.10. Flywheel Holder Ass'y (D01)

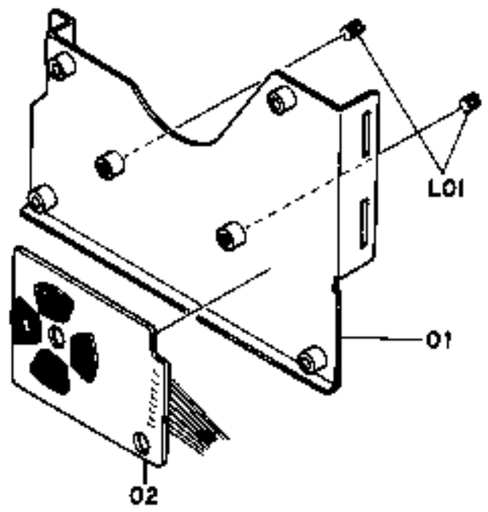

Fig. 5.10

5.11. Sub Mechanism Chassis Ass'y (D02)

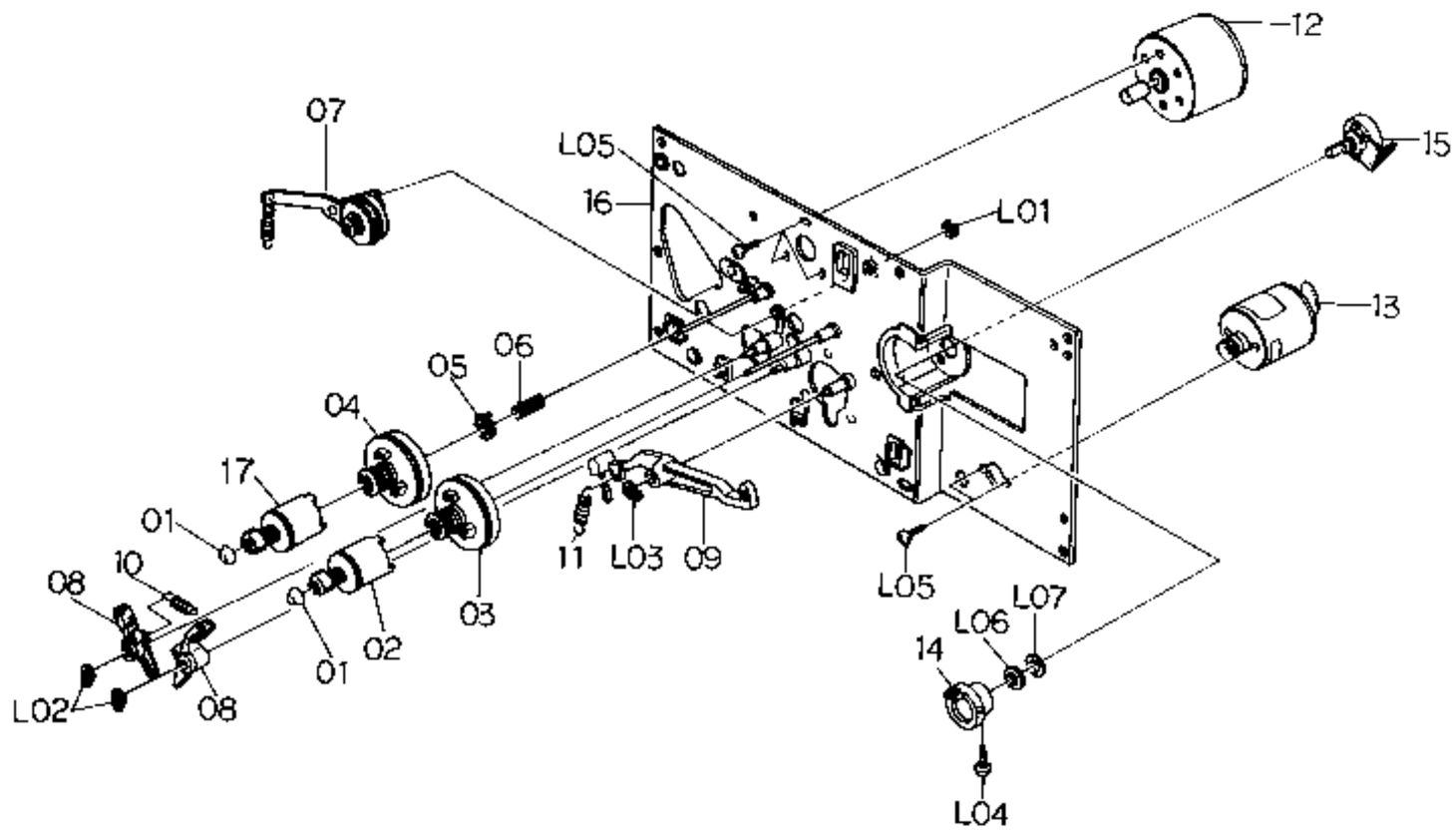

Fig. 5.11

Schematic Ref. No.	Part No.	Description	Q'ty
C03	HA04327A	Rear Panel Ass'y (U.S.A. & Canada)	1
	HA04323A	Rear Panel Ass'y (Japan)	1
	HA04324A	Rear Panel Ass'y (Others)	1
	HA04322A	Rear Panel Ass'y (UK)	1
	HA04326A	Rear Panel Ass'y (220V Class 2)	1
	HA04325A	Rear Panel Ass'y (Australia) Serial No.: A12501001 -	1
01	0H04100A	Rear Panel	1
02	BA04785A	Pin Jack P.C.B. Ass'y	1
03	BA04595A	4P DIN Socket Ass'y	1
04	BA04596A	8P DIN Socket Ass'y	1
05	0B06695A	Power Transformer (U.S.A. & Canada)	1
	0B06693A	Power Transformer (Japan)	1
	0B06694A	Power Transformer (Others)	1
	0B06692A	Power Transformer (UK, Australia & 220V Class 2)	1
06	0C01162B	Bolt Receptacle Plate	2
07	0B08037U	Cord Bushing C (U.S.A., Canada, Japan, 220V Class 2, Australia & Others)	1
	0B08351A	Cord Bushing 4K-4 (UK)	1
08	0B08533A	Power Cord (U.S.A., Canada & Others)	1
	0B08219B	Power Cord (Japan)	1
	0B08348A	Power Cord (UK)	1
	0B08093U	Power Cord (220V Class 2)	1
	0B05241A	Power Cord (Australia)	1
09	0J04601A	Switch Cover (U.S.A., Canada, Japan, 220V Class 2, UK & Australia)	1
10	0M03551B	Pass Label	1
11	0M03797A	Voltage Label 240V (UK & Australia)	1
	0M03796A	Voltage Label 220V (220V Class 2)	1
	0M04293A	Voltage Label 120V/220-240V (Others)	1
12	0B07092U	Voltage Selector (Others)	1
13	0M03946A	Voltage Selector Lock Plate C (Others)	1
L01	0E00921A	BT M3x8 ⊕ Binding (Black Chromate)	2
*L02	0E00594A	M3x8 ⊕ Binding (Bronze)	3
L03	0E00172A	Washer 3mm Toothed Lock	1
L04	0E00507A	Nut Hex. M3	1
L05	0E00714A	M2.6x6 ⊕ Binding (Bronze)	4
L06	0E00953A	M4x10 ⊕ Binding Head (Black Chromate)	2
L07	0B08583A	Plastic Rivet	2
—	0J03644A	Chobert Rivet	2
—	0M04387A	Serial Number Plate	1
—	0F01071A	Free-up Belt (UK, Australia & 220V Class 2)	1
—	0M04185A	Fuse Mark Label (220V Class 2)	1
—	0M04113A	LA Label (U.S.A. & Canada)	1
		*: Depends on the versions.	
D01	CA08384A	Flywheel Holder Ass'y Serial No.: A12501001 -	1
01	CA08382A	Flywheel Holder Sub Ass'y	1
02	BA04759A	Motor P.C.B. Ass'y	1
L01	0C08329A	Thrust Screw	2
D02	CA08343A	Sub Mechanism Chassis Ass'y Serial No.: A12501001 -	1
01	0C08039B	Reel Hub Head	2
02	CA08038B	Reel Hub B Pulley Ass'y	1
03	CA08037A	Reel Hub Take-up Ass'y	1
04	CA08064A	Reel Hub Supply Ass'y	1
05	CA08039A	Back Tension Ass'y	1
06	0C08269A	Back Tension Spring C	1
07	CA08193A	Idler Ass'y	1
08	CA08042A	Brake Ass'y	2
09	0C08030C	Brake Drive Arm	1
10	0C08129A	Brake Arm Spring	1
11	0C08128A	Brake Drive Arm Spring	1
12	CA08242A	Reel Motor Ass'y	1
13	CA08034A	Control Motor Ass'y	1
14	0C08053B	Volume Coupler	1
15	0B07240A	Volume Control 10K (B)	1
16	CA08194A	Sub Chassis Ass'y	1
17	CA08397A	Reel Hub S Pulley Ass'y	1
L01	0E00698A	E-Ring 2.5 mm	1
L02	0E00837A	Stopper Ring 3mm	2
L03	0E00838A	Stopper Ring 4mm	1

Schematic Ref. No.	Part No.	Description	Q'ty
L04	0E00859A	BT M2.6x6 ⊕ Binding	1
L05	0E00226A	M2.6x4 ⊕ Pan	5
L06	—	Volume Nut	(1)
L07	—	Volume Washer	(1)

5.12. Main Mechanism Chassis Ass'y (D03)

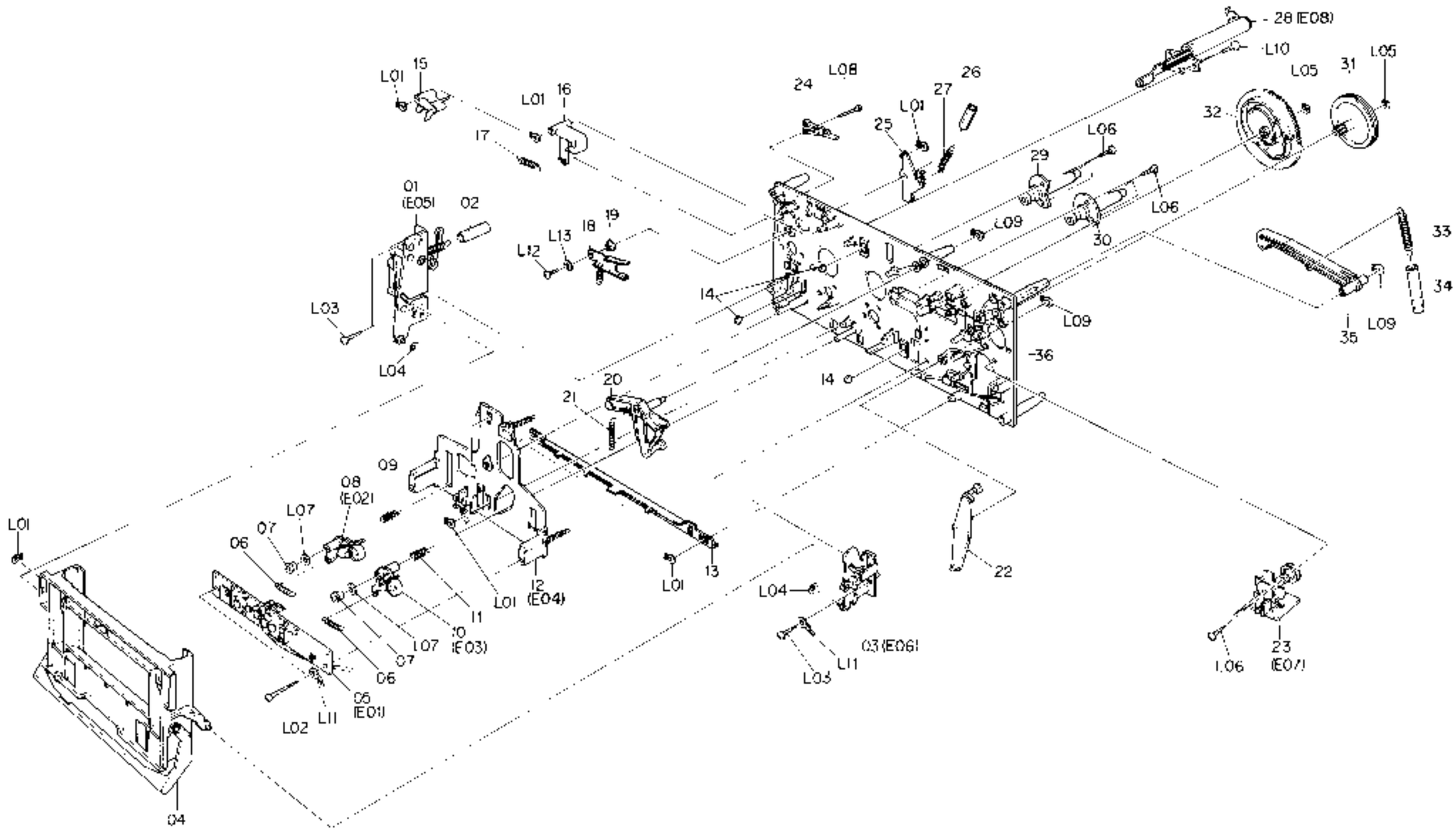

Fig. 5.12

5.13. Head Mount Base Ass'y (E01)

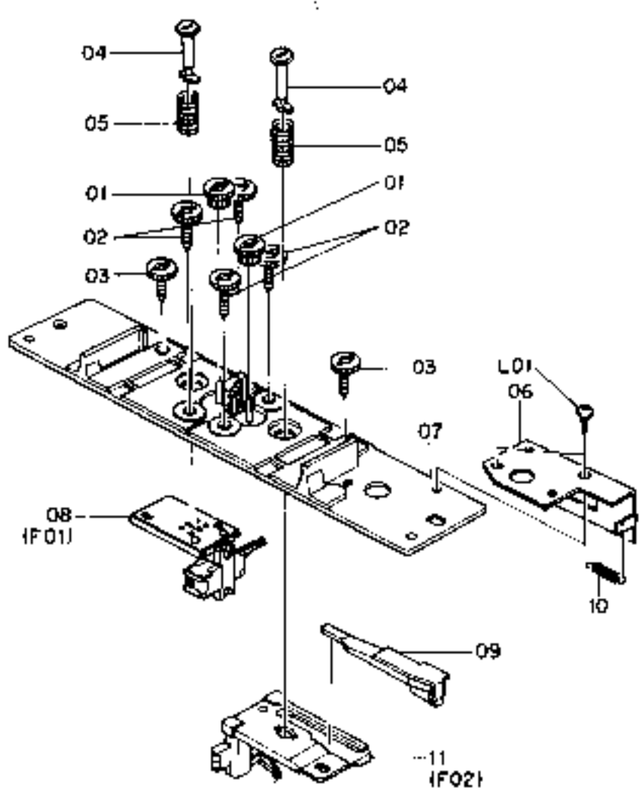

Fig. 5.13

5.14. Supply Pressure Roller Ass'y (E02)

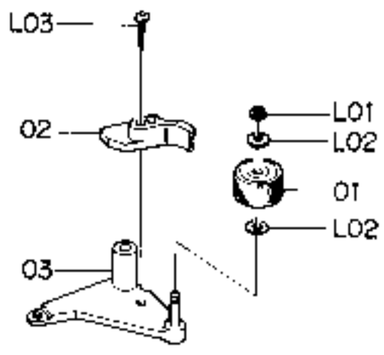

Fig. 5.14

5.15. Take-up Pressure Roller Ass'y (E03)

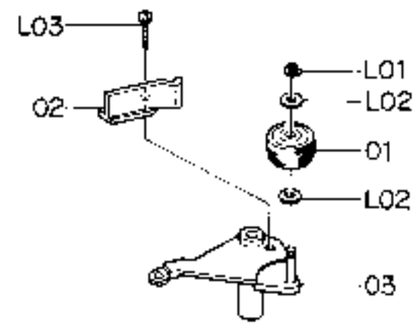

Fig. 5.15

5.16. Head Base Ass'y (E04)

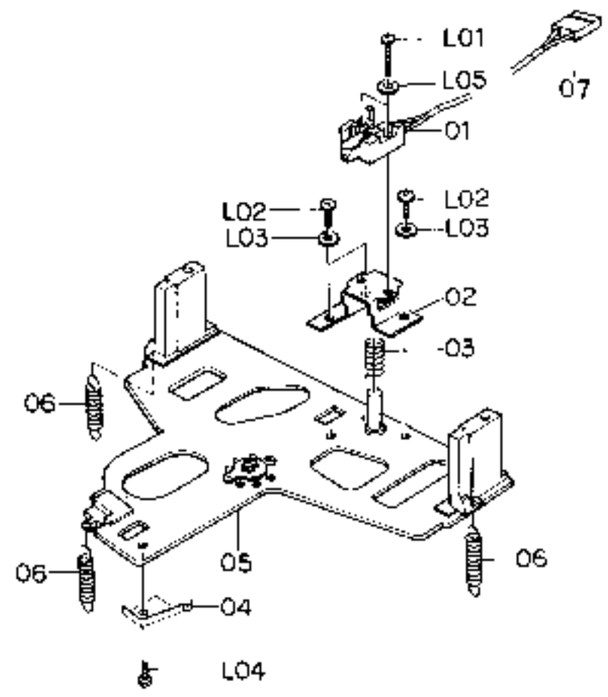

Fig. 5.16

5.17. Cassette Case Holder L Ass'y (E05)

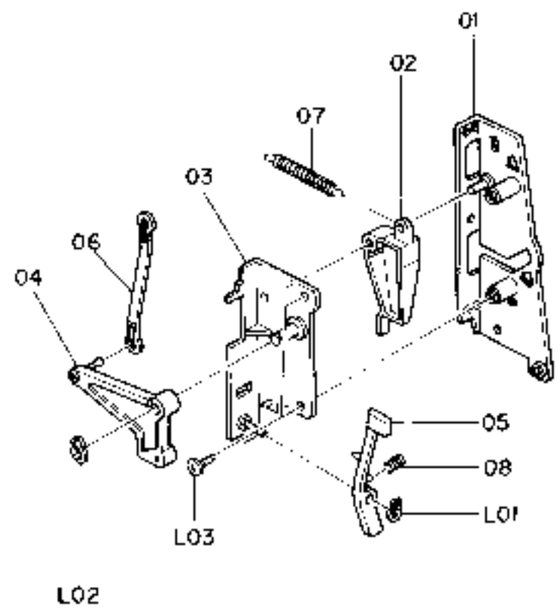

Fig. 5.17

5.18. Cassette Case Holder R Ass'y (E06)

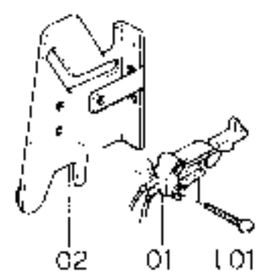

Fig. 5.18

5.19. Auto Shut-off Ass'y (E07)

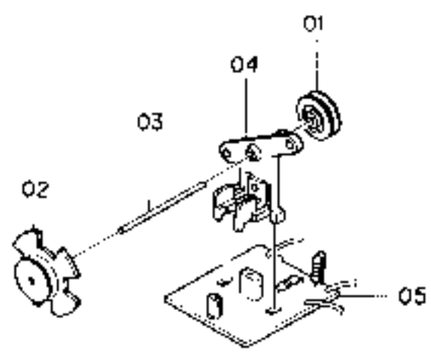

Fig. 5.19

Schematic Ref. No.	Part No.	Description	Q'ty
D03	CA08385A	**Main Mechanism Chassis Ass'y** Serial No.: A12501001 -	1
01	CA08350A	Cassette Case Holder L Ass'y	1
02	0C08151A	Lid Arm Spring Tube	1
03	CA08022A	Cassette Case Holder R Ass'y	1
04	CA08349A	Cassette Case Ass'y	1
05	CA08345A	Head Mount Base Ass'y	1
06	0C08121A	Supply Pressure Roller Spring	2
07	0C08313A	Pressure Roller Arm Bushing	2
08	CA08053B	Supply Pressure Roller Ass'y	1
09	0C08122B	Supply Pressure Roller Thrust Spring	1
10	CA08079B	Take-up Pressure Roller Ass'y	1
11	0C08183B	Take-up Pressure Roller Thrust Spring	1
12	CA08339A	Head Base Ass'y	1
13	0C08182A	Pressure Roller Drive Bar B	1
14	0C08086B	Head Base Roller	3
15	0C08050B	Record Sensor	1
16	0C08051E	Cassette Hold Arm	1
17	0C08120A	Cassette Hold Arm Spring	1
18	CA08196A	Back Tension Ass'y	1
19	0C08254A	Back Tension Arm Collar	1
20	CA08027A	Head Base Drive Arm Ass'y	1
21	0C08143C	Head Base Drive Arm Spring	1
22	CA08026A	Pressure Roller Drive Arm Ass'y	1
23	CA08396A	Auto Shut-off Ass'y	1
24	0C08119A	Record Protector	1
25	0C08194C	Damper Lock Arm	1
26	0C08153A	Damper Lock Arm Spring Tube	1
27	0C08116A	Record Arm Spring	1
28	CA08030A	Pneumatic Damper Ass'y	1
29	CA08388B	Supply Capstan Flange Ass'y	1
30	CA08383B	Take-up Capstan Flange Ass'y	1
31	0C08186A	Cam Drive Gear	1
32	0C08029H	Control Cam	1
33	0C08117A	Counter-Load Arm Spring	1
34	0C08152A	Counter-Load Arm Spring Tube	1
35	CA08028A	Counter-Load Arm Ass'y	1
36	CA08347A	Main Chassis Ass'y	1
L01	0E00837A	Stopper Ring 3mm	9
L02	0E00834A	BT M3x30 ⊕Pan	2
L03	0E00831A	BT M3x10 ⊕Pan	3
L04	0E00254A	Washer 3.1mm	2
L05	0E00222A	E-Ring 2mm	2
L06	0E00876A	BT M2.6x8 ⊕Pan	8
L07	0E00178A	Washer 3mm	2
L08	0E00879A	BT M2x15 ⊕Pan	1
L09	0E00838A	Stopper Ring 4mm	3
L10	0E00846A	BT M3x8 ⊕Pan	3
L11	0E00895A	Earth Lug 3mm	2
L12	0E00859A	BT M2.6x6 ⊕Binding	1
L13	0C08255A	Washer 2.6mm	1
E01	CA08345A	**Head Mount Base Ass'y** Serial No.: A12501001 -	1
01	0C08028C	Head Height Adjustment Gear	2
02	0C08027F	Head Height Adjustment Screw	4
03	0C08026D	Azimuth Alignment Screw	2
04	0C08161B	Spring Stopper	2
05	0C08187B	Head Plate Spring	2
06	0C08315A	Azimuth Alignment Wire Hold Plate	1
07	CA08083D	Head Mount Base Sub Ass'y	1
08	CA08341A	P-8L Playback Head Ass'y	1
09	0C08316A	Azimuth Alignment Plate	1
10	0C08317A	Azimuth Spring	1
11	CA08340A	R-8L Record Head Ass'y	1
L01	0E00917A	BT M2.6x5 ⊕Pan	2
E02	CA08053B	**Supply Pressure Roller Ass'y** Serial No.: A12501001 -	1
01	0C08164G	Pressure Roller	1
02	0C08189C	Supply Tape Guide	1
03	CA08061A	Supply Pressure Roller Arm Ass'y	1
L01	0E00042A	E-Ring 1.5mm	1
L02	0C08024A	Washer 2mm	2
L03	0E00788A	BT M2x8 ⊕Pan (Black Chromate)	1
E03	CA08079B	**Take-up Pressure Roller Ass'y** Serial No.: A12501001 -	1
01	0C08164G	Pressure Roller	1
02	0C08181C	Take-up Tape Guide	1
03	CA08073B	Take-up Pressure Roller Arm Ass'y	1
L01	0E00042A	E-Ring 1.5mm	1
L02	0C08024A	Washer 2mm	2
L03	0E00788A	BT M2x8 ⊕Pan (Black Chromate)	1
E04	CA08339A	**Head Base Ass'y** Serial No.: A12501001 -	1
01	GA02103A	EOK Erase Head	1
02	0C08158D	Erase Head Hold Plate	1
03	0C08166A	Erase Head Hold Plate Spring	1
04	0C08174D	Cassette Hold Spring	1
05	CA08003R	Head Base Ass'y	1
06	0C08175A	Head Base L Spring	3
07	0B08944A	2P-H Connector	1
L01	0E00951A	M1.7x7 ⊕Pan (Black Chromate)	2
L02	0E00909A	M2x6 ⊕Pan	3
L03	0E00117A	Washer 2mm	3
L04	0E00853A	BT M2x3 ⊕Pan	1
L05	0E00952A	Washer 1.7mm	2
E05	CA08350A	**Cassette Case Holder L Ass'y** Serial No.: A12501001 -	1
01	CA08326A	Cassette Case Holder L Sub Ass'y	1
02	0C08073C	Lid Arm A	1
03	0C08306A	Eject Arm Holder	1
04	0C08307A	Eject Arm A	1
05	0C08197C	Eject Arm B	1
06	0C08199B	Eject Arm Joint	1
07	0C08114A	Lid Arm Spring	1
08	0C08211C	Eject Arm Spring	1
L01	0E00837A	Stopper Ring 3mm	1
L02	0E00838A	Stopper Ring 4mm	1
L03	0E00865A	BT M3x10 ⊕Binding	2
E06	CA08022A	**Cassette Case Holder R Ass'y** Serial No.: A12501001 -	1
01	0C08133A	Eject Sensor	1
02	CA08044A	Cassette Case Holder R Sub Ass'y	1
L01	0E00840A	BT M2x8 ⊕Pan	2
E07	CA08396A	**Auto Shut-off Ass'y** Serial No.: A12501001 -	1
01	0C08047A	Shut-off Pulley A	1
02	0C08309B	Shut-off Pulley B	1
03	0C08088B	Shut-off Pulley Shaft	1
04	0C08207B	Shut-off Pulley Holder	1
05	BA04852A	Shut-off P.C.B. Ass'y	1

5.20. Pneumatic Damper Ass'y (E08)

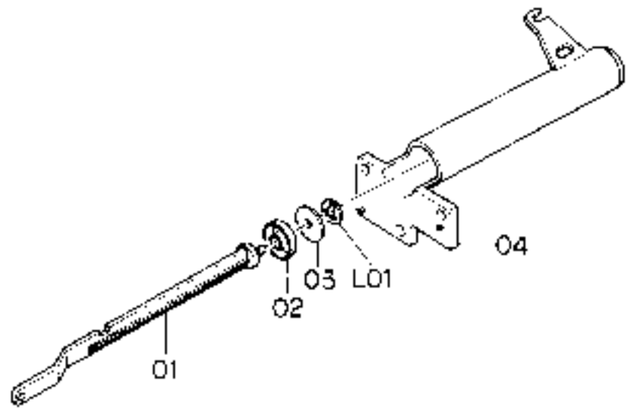

Fig. 5.20

5.21. P-8L Playback Head Ass'y (F01)

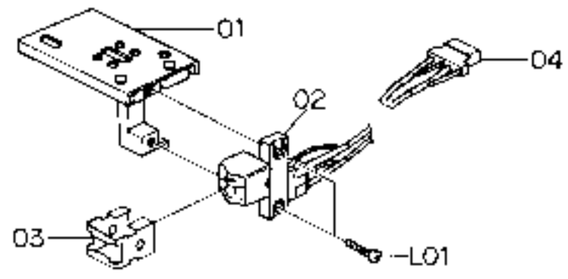

Fig. 5.21

5.22. R-8L Record Head Ass'y (F02)

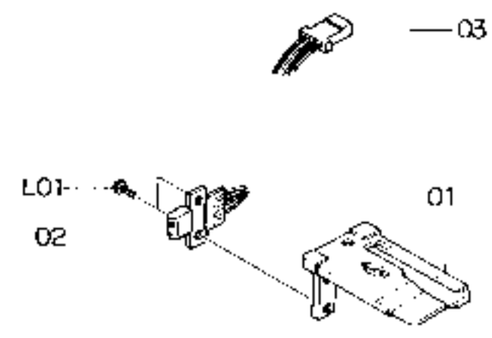

Fig. 5.22

Schematic Ref. No.	Part No.	Description	Q'ty
E08	CA08030A	**Pneumatic Damper Ass'y** Serial No.: A12501001 -	1
01	0C08058C	Damper Piston	1
02	0C08102C	Damper Ring	1
03	0C08010C	Damper Plate	1
04	0C08059D	Sylinder	1
L01	0E00874A	Stopper Ring CS 2mm	1
F01	CA08341A	**P-8L Playback Head Ass'y** Serial No.: A12501001 -	1
01	CA08307A	Playback Head Plate Ass'y	1
02	GA02034A	P-8LH Playback Head	1

Schematic Ref. No.	Part No.	Description	Q'ty
03	0C08169D	Pad Lifter 54	1
04	0B08946A	4P-H Connector	1
L01	0E00886A	M1.7x6.5 ⊕Pan	2
F02	CA08340A	**R-8L Record Head Ass'y** Serial No.: A12501001 -	1
01	0C08234B	Record Head Plate	1
02	GA01050A	R-8LH Record Head	1
03	0B02274A	4P-H Connector RED	1
L01	0E00887A	M1.7x4 ⊕Pan	2

Schematic Ref. No.	Part No.	Description
	BA04618A	**Power Switch P.C.B. Ass'y (U.S.A. & Canada)**
	BA04594A	**Power Switch P.C.B. Ass'y (Japan)**
	BA04620A	**Power Switch P.C.B. Ass'y (UK, Australia, 220V Class 2 & Others)**
	0B08956C	Power Switch P.C.B.
SW1	0B07407A	Power Switch (U.S.A. & Canada)
SW1	0B07406A	Power Switch (Japan)
SW1	0B07408A	Power Switch (UK, Australia, 220V Class 2 & Others)
M2	0B08342A	Spark Killer (U.S.A. & Canada)
M2	0B08363A	Spark Killer (Japan)
M2	0B08955A	Spark Killer (UK, Australia, 220V Class 2 & Others)
	0E00622A	M3x5 ⊕Pan (2A) (2)
	0E00752A	Eyelet 2x3 (2)
	0J04475A	Power Switch Holder (1)
	0J04555A	Power Switch Insulator (1)
	BA04547A	**Azimuth Switch P.C.B. Ass'y**
	0B02511A	Azimuth Switch P.C.B.
	0B07394A	Push Switch (1)
	0E00622A	M3x5 ⊕Pan (2A) (2)
	0J04473A	Adjustment Switch Holder

Schematic Ref. No.	Part No.	Description
	BA04545A	**Record Cal. LED P.C.B. Ass'y**
	0B02509D	Record Cal. LED P.C.B.
LED601-609	0B06333A	LED RED TLR124A
CN10	0B08923B	6P-H Connector
	BA04546A	**Volume P.C.B. Ass'y**
	0B02510A	Volume P.C.B.
VR001,002	0B07202A	VR 100K (A)
VR003	0B07204A	VR 10K (A) x 2
	BA04642A	**Counter Control P.C.B. Ass'y**
	0B02514A	Counter Control P.C.B.
IC601	0B06320A	IC LM6402A-048
X601	0B08908A	Xtal KBR400BT
R612	0B09749A	RK 1M 1/6W J
C601,602	0B05879A	CC 220P 50V K
C603	0B01836A	CE 47μ 10V
CN14	0B08939B	7P-H Connector
CN16	0B08940B	11P-H Connector
FC601	0B05265A	7P Flat Cable
FC602	0B05262A	6P Flat Cable
	BA04548A	**Counter P.C.B. Ass'y**
	0B02513B	Counter P.C.B.
Q601,602 603,604	0B06319A	TR 2SA608SP
LED601	0B06326A	Counter LED SL1405 20
R601,602 603,604	0B05629A	RK 2.7K 1/4W J
R605-611	0B01933A	RK 220 1/4W J (7)
SW601	0B07219A	Switch AKC8S

Schematic Ref. No.	Part No.	Description
	BA04852A	**Shut-off P.C.B. Ass'y**
	0B07839B	Shut-off P.C.B.
Q405	0B06228A	Photo TR PH104
R604	0B05615A	RK 22K 1/4W J
R605	0B09215A	RF 100 1/4W J
PL407	0B08552A	Lamp 12V 25mA

6. MOUNTING DIAGRAMS AND PARTS LIST

Notes: 1. Mounting diagram shows a dip side view of the printed circuit board.
2. Diode is 1SS53, 1S953, or 1S1555 unless otherwise specified.
3. Abbreviation for part name:
TR — Transistor, SiD — Silicon Diode, GD — Germanium Diode, ZD — Zener Diode
RK — Carbon Resistor, RM — Metal Film Resistor, RF — Fail Safe Type Resistor, RC — Cement Resistor
CE — Electrolytic Capacitor, CM — Mylar Capacitor, CC — Ceramic Capacitor, CP — PP Capacitor,
CT — Tantalum Capacitor, C — Mica Capacitor

6.1. Power Switch P.C.B. Ass'y

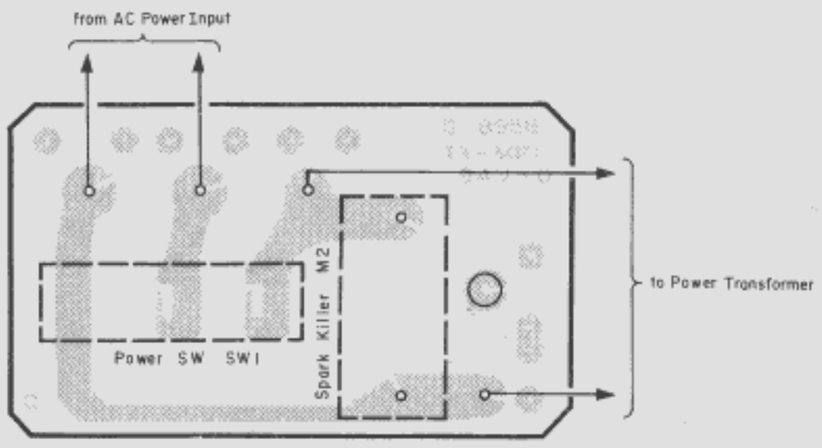

Fig. 6.1

6.2. Azimuth Switch P.C.B. Ass'y

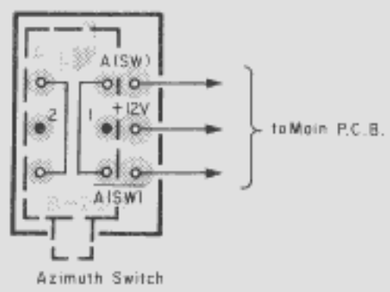

Fig. 6.2

6.3. Record Cal. LED P.C.B. Ass'y

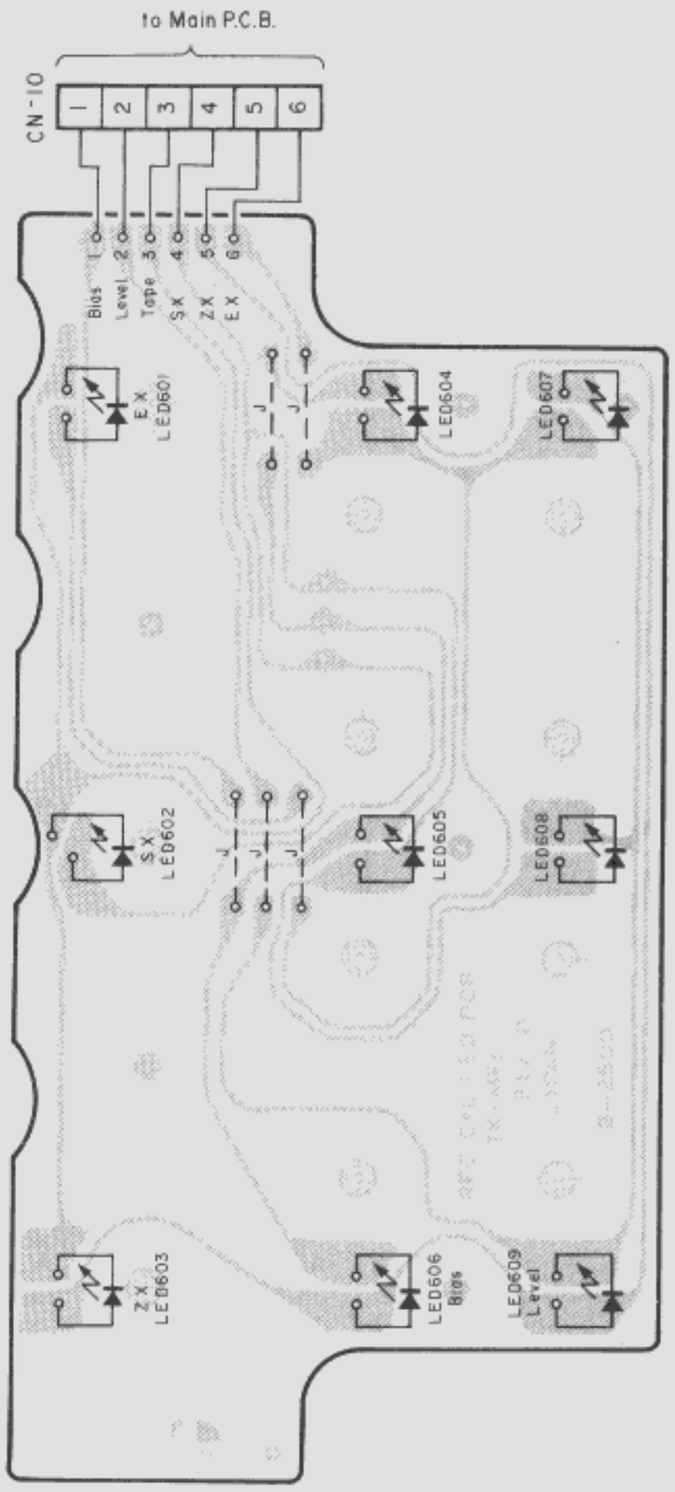

Fig. 6.3

6.4. Volume P.C.B. Ass'y

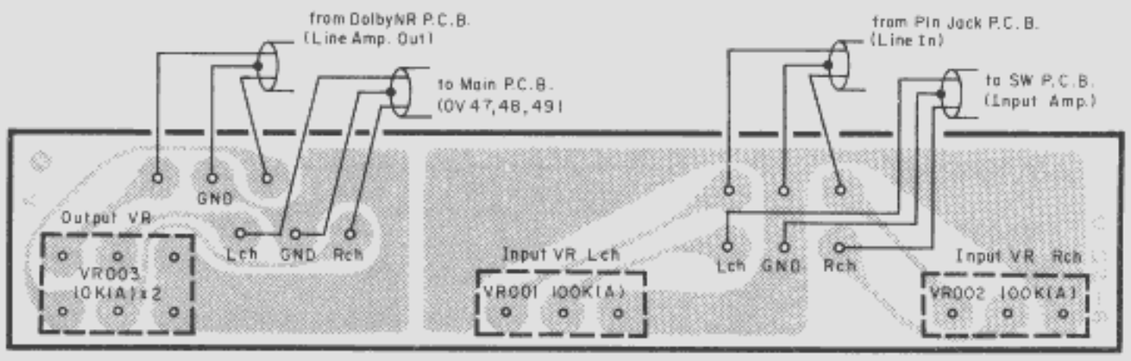

Fig. 6.4

6.5. Counter Control P.C.B. Ass'y

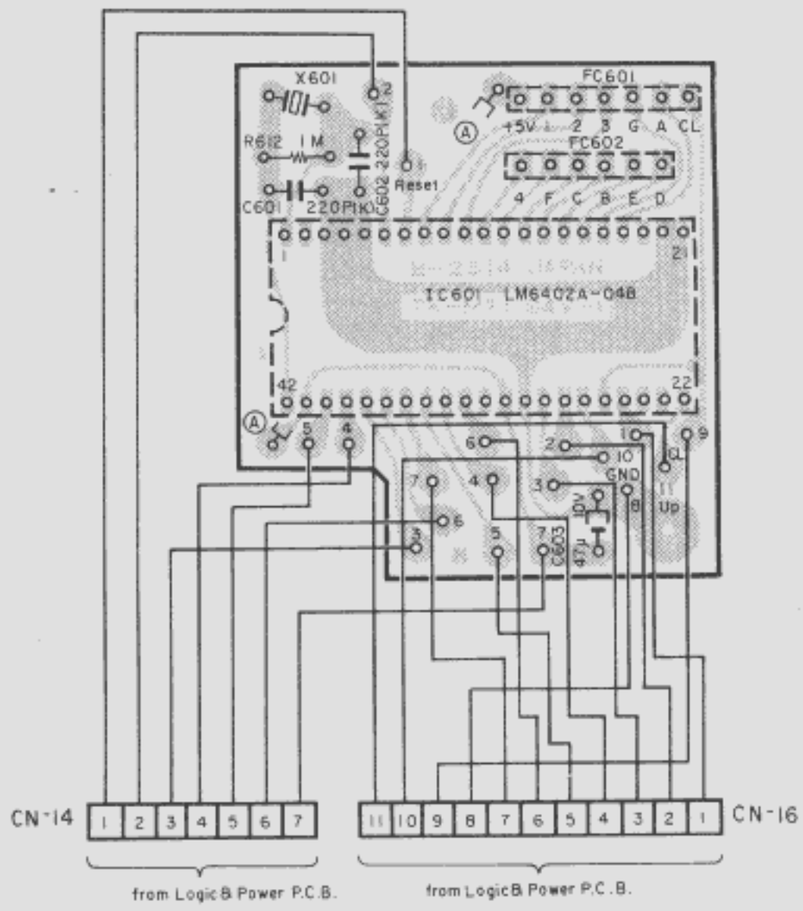

Fig. 6.5

6.6. Counter P.C.B. Ass'y

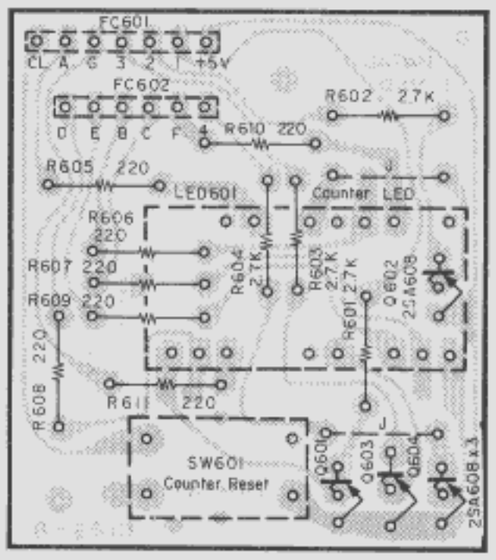

Fig. 6.6

6.7. Shut-off P.C.B. Ass'y

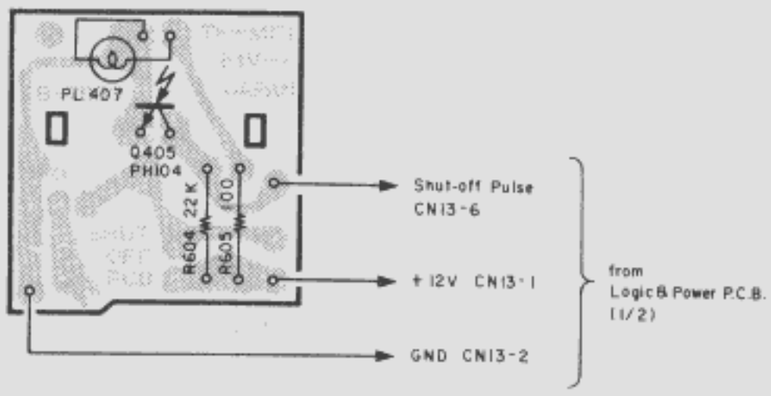

Fig. 6.7

6.8. Indicator P.C.B. Ass'y

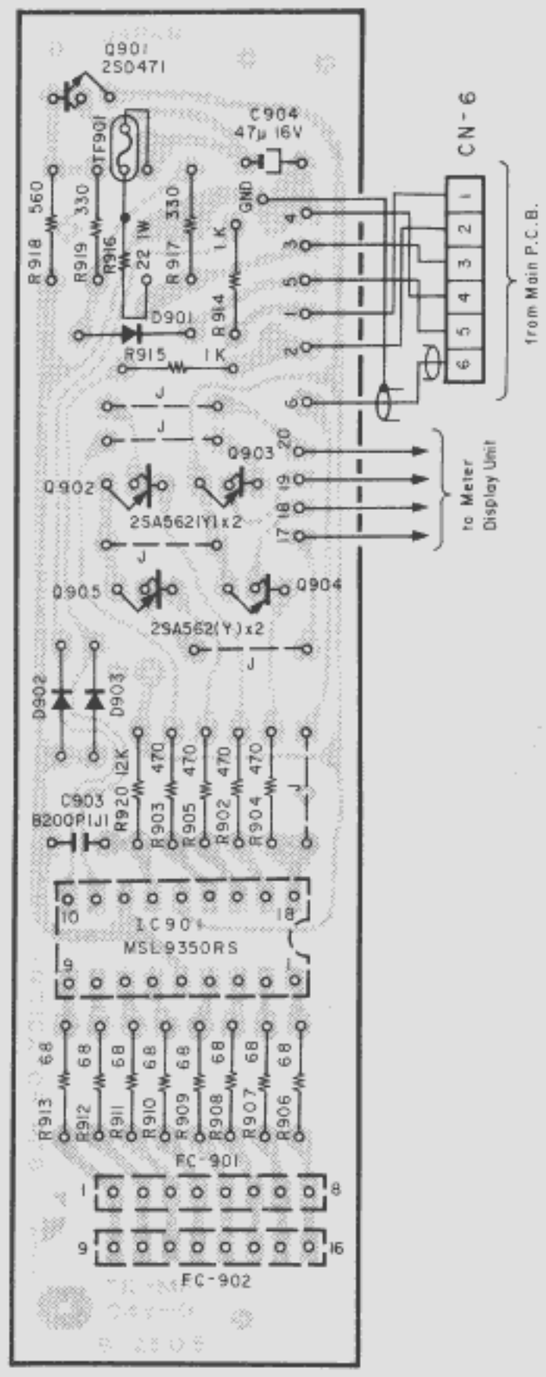

Fig. 6.8

6.9. Control Switch P.C.B. Ass'y

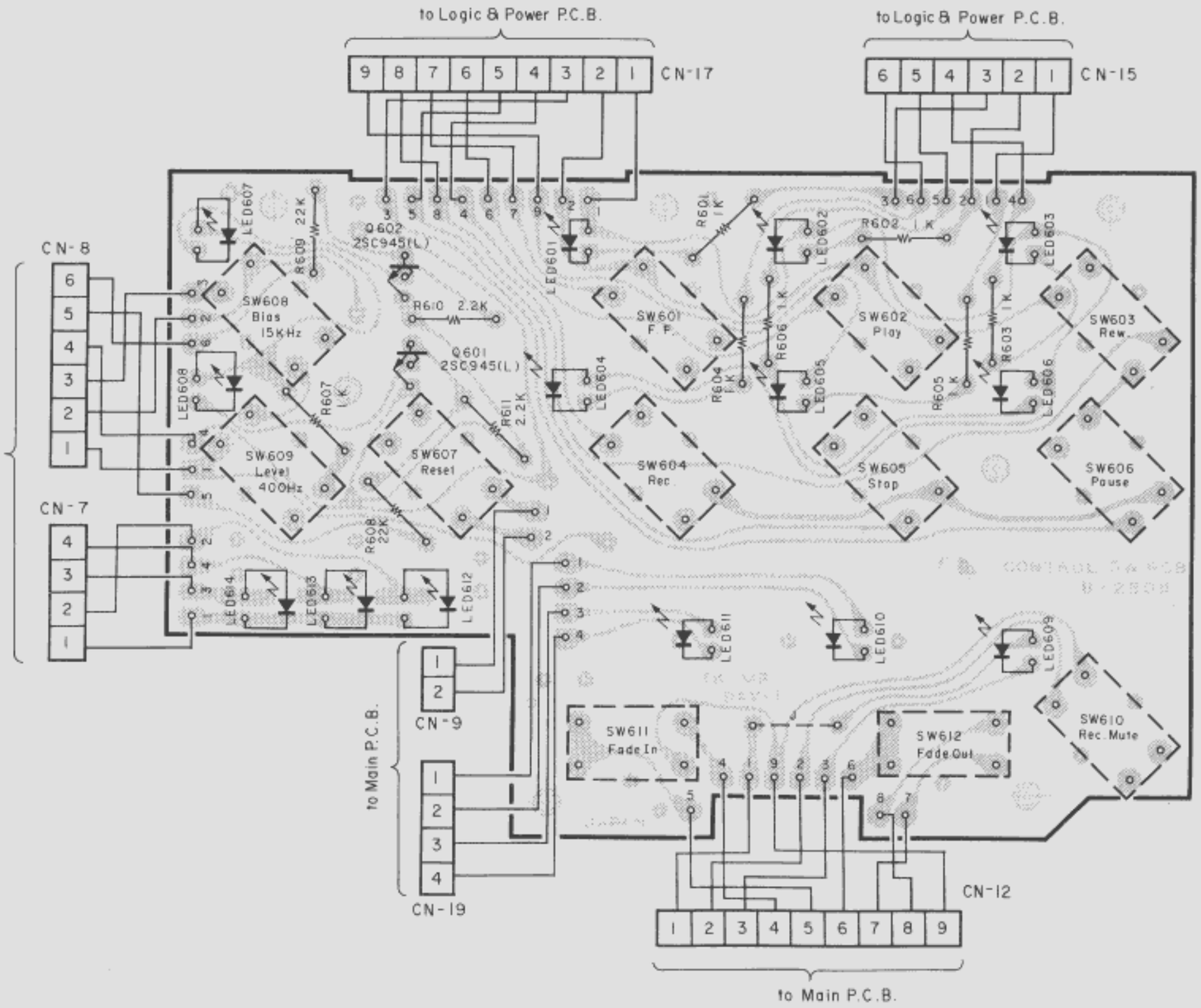

Fig. 6.9

6.10. Switch P.C.B. Ass'y

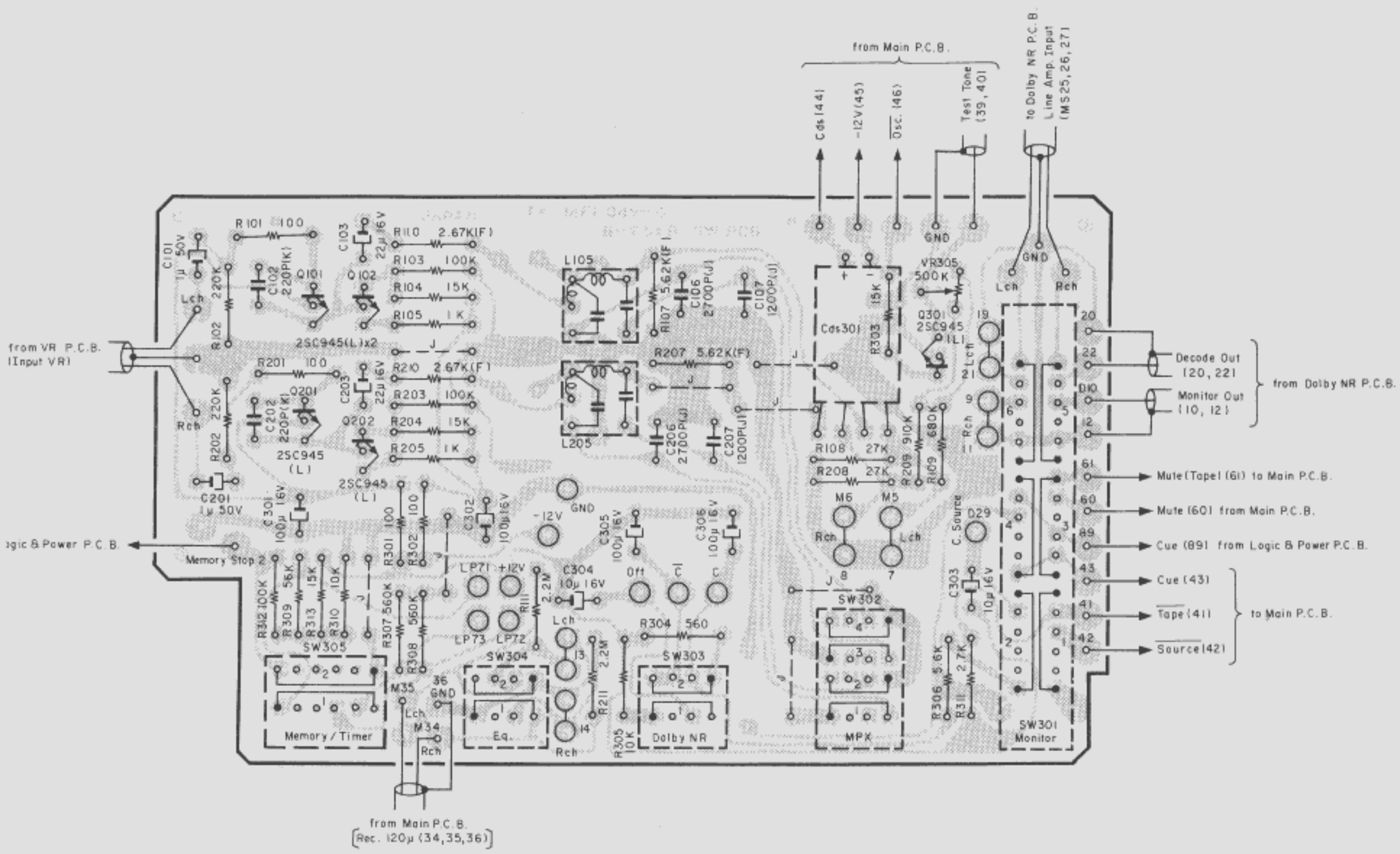

Fig. 6.10

6.11. Record Cal. P.C.B. Ass'y

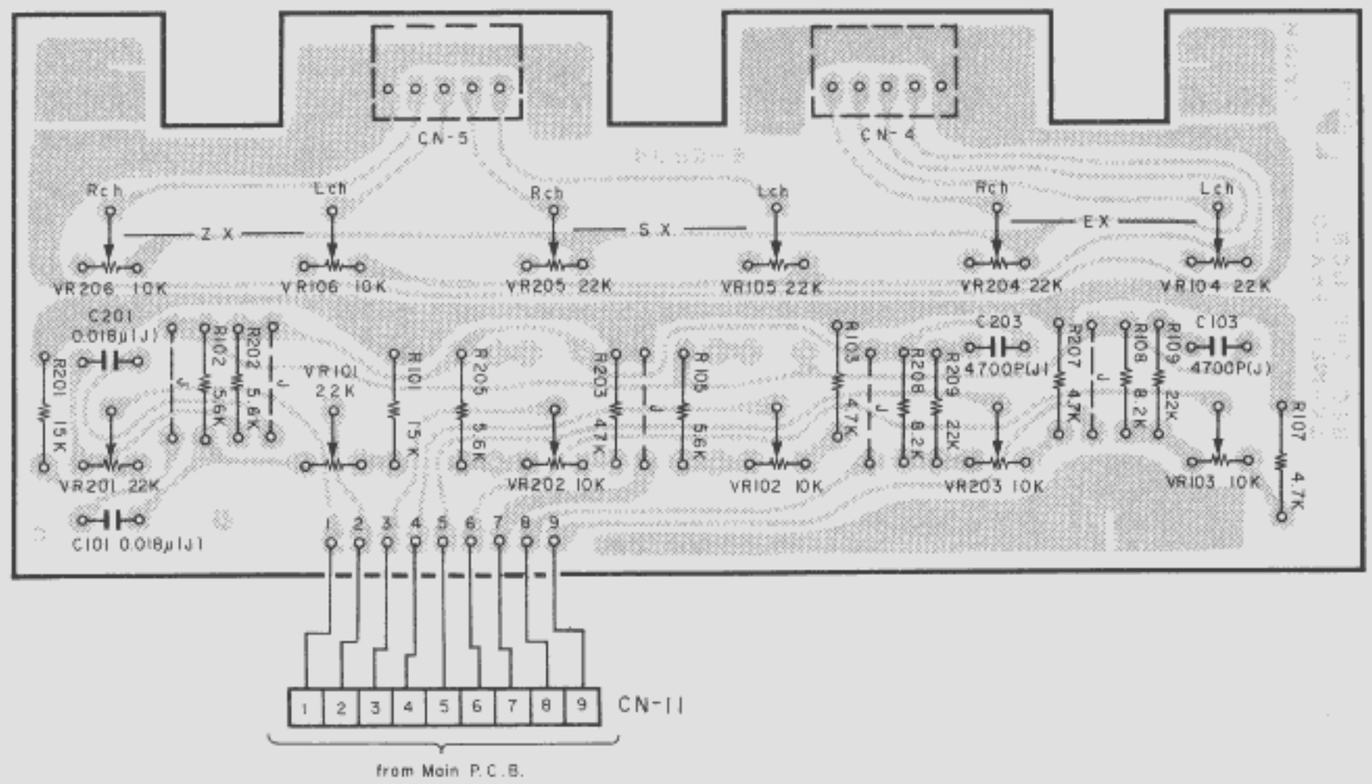

Fig. 6.11

Schematic Ref. No.	Part No.	Description
	BA04543A	Indicator P.C.B. Ass'y
	0B02505D	Indicator P.C.B.
IC901	0B06284A	IC MSL9350RS
Q901	0B06066A	TR 2SD471
Q902,903 904,905	0B06202A	TR 2SA562 (Y)
D901-903	0B01909A	SiD 1S1555
R902,903 904,905	0B05576A	RK 470 1/4W J
R906-913	0B01704A	RK 68 1/4W J (8)
R914,915	0B01857A	RK 1K 1/4W J
R916	0B09378A	RF 22 1W J
R917,919	0B05577A	RK 330 1/4W J
R918	0B05575A	RK 560 1/4W J
R920	0B09263A	RK 12K 1/4W J
C903	0B05814A	CM 8200P 50V J
C904	0B01403A	CE 47μ 16V
F901	0B08715A	Thermal Fuse 129
CN6	0B02276A	6P-H Connector RED
	0B05236A	8P Flat Cable (1)
	0B05264A	Flat Cable (1)
	0B06336A	Meter Display (1)
	BA04544A	Control Switch P.C.B. Ass'y
	0B02508D	Control Switch P.C.B.
Q601,602	0B01872A	TR 2SC945 (L)
LED601 602,603 605,606 612,614	0B06334A	LED GRN TLG124A
LED604 607,608 609,613	0B06333A	LED RED TLR124A
LED610 611	0B06327A	LED
R601-607	0B01857A	RK 1K 1/4W J
R608,609	0B05615A	RK 22K 1/4W J
R610,611	0B05622A	RK 2.2K 1/4W J
SW601-610	0B07219A	Switch AKC8S
SW611,612	0B07396A	Double Action Switch KHF10901
CN7	0B02273A	4P-H Connector BLU
CN8	0B02275A	6P-H Connector BLU
CN9	0B02272A	2P-H Connector BLU
CN12	0B02279A	9P-H Connector BLU
CN15	0B02277A	6P-H Connector GRN
CN17	0B02278A	9P-H Connector GRN
CN19	0B08935B	4P-H Connector
	0E00857A	BT M3x6 ⊕ Binding (1)

Schematic Ref. No.	Part No.	Description
	0J04580A	P.C.B. Himelon (1)
	0J04534B	Fader House (1)
	BA04770A	Switch P.C.B. Ass'y
	0B02549A	Switch P.C.B.
Q101,102 201,202 301	0B01872A	TR 2SC945 (L)
Cds301	0B06325B	Photocoupler MCD7214F
L105,205	0B06690A	L-C Block
VR305	0B07330A	Semi-fixed VR 500K
R101,201	0B01679A	RK 100 1/4W J
R102,202	0B05625A	RK 220K 1/4W J
R103,203 312	0B01889A	RK 100K 1/4W J
R104,204 303,313	0B01683A	RK 15K 1/4W J
R105,205	0B01857A	RK 1K 1/4W J
R107,207	0B09427A	RM 5.62K 1/4W F
R108,208	0B05743A	RK 27K 1/4W J
R109	0B05868A	RK 680K 1/4W J
R110,210	0B09421A	RM 2.67K 1/4W F
R111,211	0B05671A	RK 2.2M 1/4W J
R209	0B05960A	RK 910K 1/4W J
R301,302	0B09215A	RF 100 1/4W J
R304	0B05575A	RK 560 1/4W J
R305,310	0B01888A	RK 10K 1/4W J
R306	0B01887A	RK 5.6K 1/4W J
R307,308	0B05784A	RK 560K 1/4W J
R309	0B05508A	RK 56K 1/4W J
R311	0B05629A	RK 2.7K 1/4W J
C101,201	0B01405A	CE 1μ 50V
C102,202	0B09283A	CC 220P 50V K
C103,203	0B01862A	CE 22μ 16V
C106,206	0B09189A	CM 2700P 50V J
C107,207	0B05687A	CM 1200P 50V J
C301,302 305,306	0B01400A	CE 100μ 16V
C303,304	0B01412A	CE 10μ 16V
SW301	0B07393A	Rotary Switch 6-2NS
SW302	0B07428A	Rotary Switch 4-2S
SW303	0B07350A	Rotary Switch 2-3
SW304	0B07392A	Rotary Switch 2-2S
SW305	0B07391A	Rotary Switch 2-4NS
	0B08515A	Insu-Lock (4)

Schematic Ref. No.	Part No.	Description
	BA04542A	Record Cal. P.C.B. Ass'y
	0B02504D	Record Cal. P.C.B.
VR101,104 105,201 204,205	0B07277A	Semi-fixed VR 22K
VR102,103 106,202 203,206	0B07404A	Semi-fixed VR 10K
R101,201	0B01683A	RK 15K 1/4W J
R102,105 202,205	0B01887A	RK 5.6K 1/4W J
R103,107 203,207	0B01846A	RK 4.7K 1/4W J
R108,208	0B01856A	RK 8.2K 1/4W J
R109,209	0B05615A	RK 22K 1/4W J
C101,201	0B05832A	CM 0.018μ 50V J
C103,203	0B05652A	CM 4700P 50V J
CN4,5	0B08727A	5P-S Connector
CN11	0B08920B	9P-H Connector
	0E00612A	M3x6 ⊕Pan (2A) (2)
	0J04481B	Shield Case C (1)
	0J04483A	Record Cal. P.C.B. Holder (1)

6.12. D/D Motor Control P.C.B. Ass'y

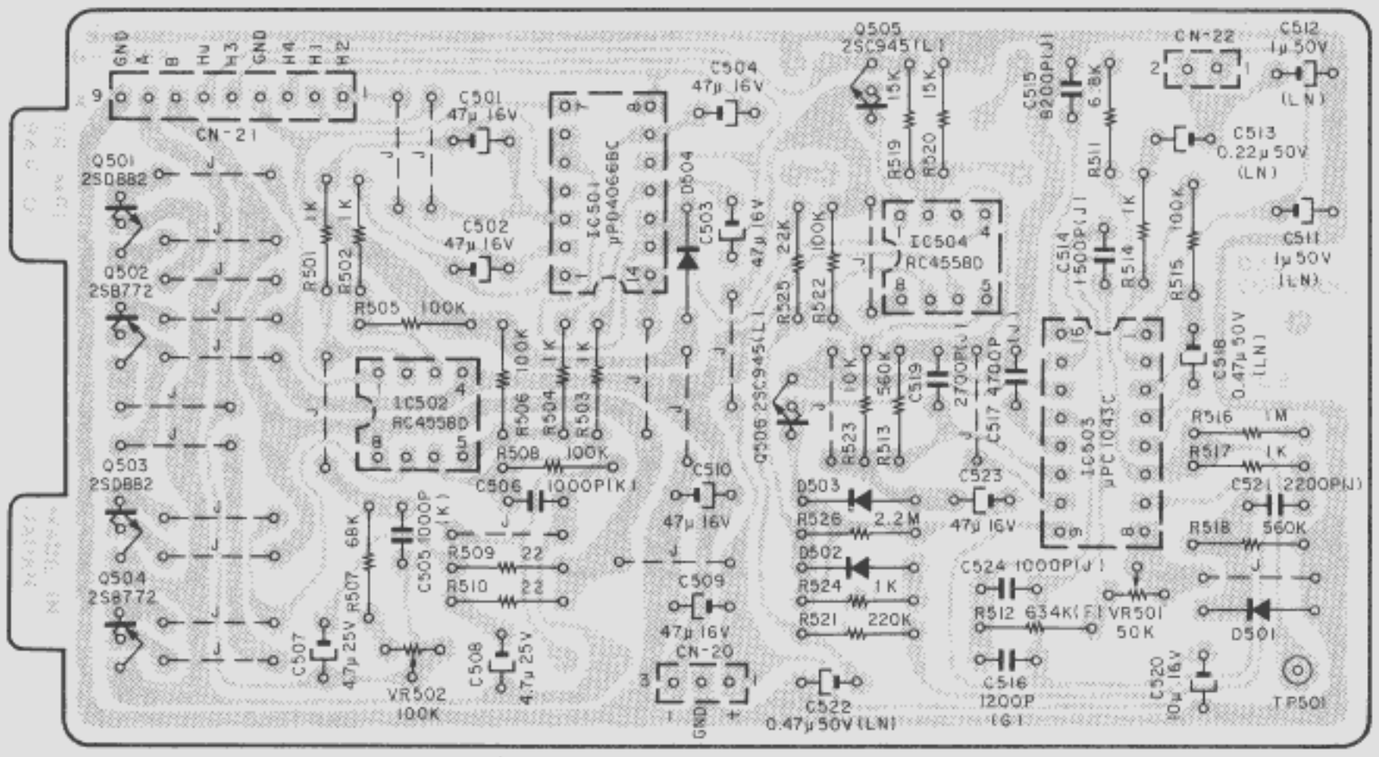

Fig. 6.12

6.13. Motor P.C.B. Ass'y

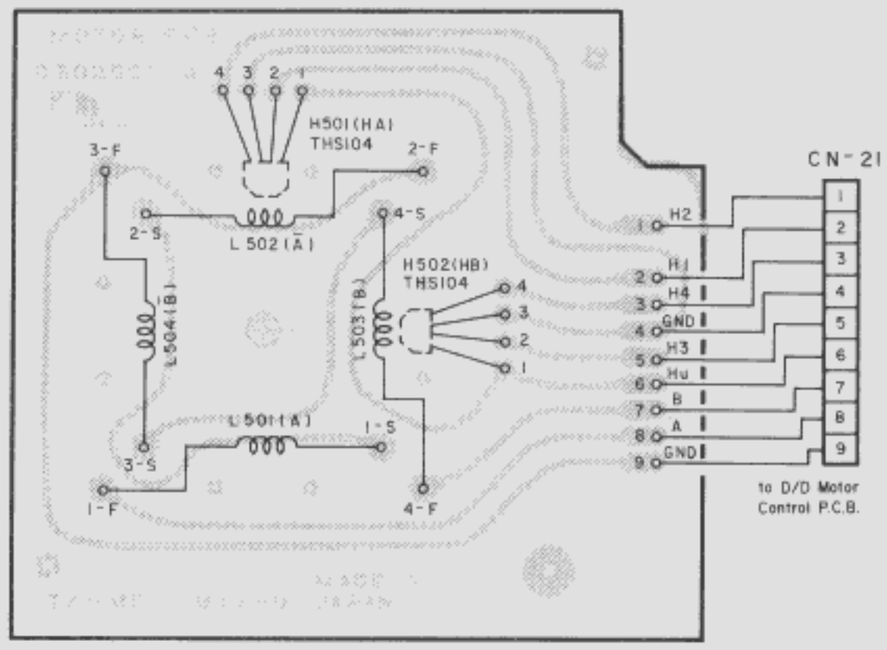

Fig. 6.13

6.14. Dolby NR P.C.B. Ass'y

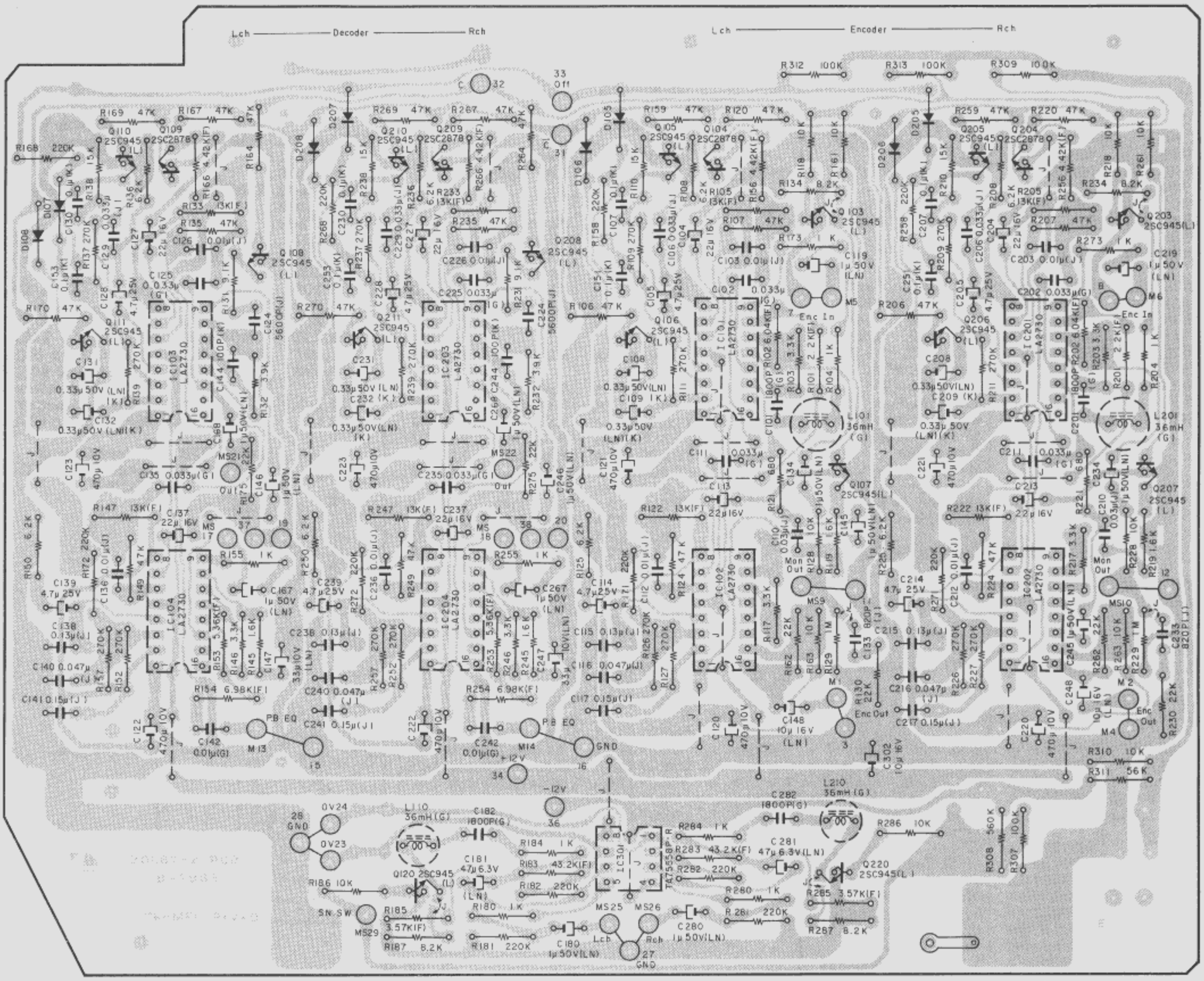

Fig. 6.14

Schematic Ref. No.	Part No.	Description
	BA04777A	D/D Motor Control P.C.B. Ass'y
	0B02552A	D/D Motor Control P.C.B.
IC501	0B06144A	IC μPD4066BC
IC502,504	0B06124B	IC RC4558D
IC503	0B06377A	IC μPC1043C
Q501,503	0B06316A	TR 2SD882
Q502,504	0B06303A	TR 2SB772 (P,Q)
Q505,506	0B01872A	TR 2SC945 (L)
D501-504	0B01909A	SiD 1S1555
VR501	0B09808A	Semi-fixed VR 50K
VR502	0B09060A	Semi-fixed VR 100K
R501,502 503,504 514,517 524	0B01857A	RK 1K 1/4W J
R505,506 508,515 522	0B01889A	RK 100K 1/4W J
R507	0B05692A	RK 68K 1/4W J
R509,510	0B09049A	RF 22 1/4W J
R511	0B01682A	RK 6.8K 1/4W J
R512	0B09822A	RM 634K 1/4W F
R513,518	0B05784A	RK 560K 1/4W J
R516	0B05776A	RK 1M 1/4W J
R519,520	0B01683A	RK 15K 1/4W J
R521	0B05625A	RK 220K 1/4W J
R523	0B01888A	RK 10K 1/4W J
R525	0B05615A	RK 22K 1/4W J
R526	0B05671A	RK 2.2M 1/4W J
C501,502 503,504 509,510 523,525	0B01403A	CE 47μ 16V
C505,506	0B09288A	CC 1000P 50V K
C507,508	0B01402A	CE 4.7μ 25V
C511,512	0B09223A	CE 1μ 50V (LN)
C513	0B09144A	CE 0.22μ 50V (LN)
C514	0B05653A	CM 1500P 50V J
C515	0B05814A	CM 8200P 50V J
C516	0B09820A	CP 1200P 100V G
C517	0B05652A	CM 4700P 50V J
C518,522	0B09222A	CE 0.47μ 50V (LN)
C519	0B09189A	CM 2700P 50V J
C520	0B01412A	CE 10μ 16V
C521	0B01802A	CM 2200P 50V J
C524	0B05550A	CM 1000P 50V J
CN20	0B08653A	3P-T Post
CN21	0B08645A	9P-T Post
CN22	0B08656A	2P-T Post
	0J04485A	Heat Sink B (2)
	0B08964A	TR Mica TO-126 (4)
	0E00521A	M3x8 ⊕Pan (4)
	0E00507A	Nut Hex. M3 (4)
	BA04759A	Motor P.C.B. Ass'y
	0B02551A	Motor P.C.B.
H501,502	0B06374A	Hall Sensor THS104
L501-504	CA08392A	Motor Coil Ass'y
CN21	0B02239A	9P-H Connector

Schematic Ref. No.	Part No.	Description
	BA04766A	Dolby NR P.C.B. Ass'y
	— PB Dolby NR —	
IC103,104 203,204	0B06388A	IC LA2730
Q108,110 111,208 210,211	0B01872A	TR 2SC945 (L)
Q109,209	0B06299A	TR 2SC2878
D107,108 207,208	0B01909A	SiD 1S1555
R131,231	0B05694A	RK 9.1K 1/4W J
R132,232	0B05675A	RK 3.9K 1/4W J
R133,147 233,247	0B09557A	RM 13K 1/4W F
R135,149 164,167 169,170 235,249 264,267 269,270	0B05641A	RK 47K 1/4W J
R136,150 236,250	0B09271A	RK 6.2K 1/4W J
R137,139 152,157 237,239 252,257	0B05620A	RK 270K 1/4W J
R138,238	0B01683A	RK 15K 1/4W J
R145,245	0B09565A	RK 1.6K 1/4W J
R146,246	0B01681A	RK 3.3K 1/4W J
R153,253	0B09426A	RM 5.36K 1/4W F
R154,254	0B09604A	RM 6.98K 1/4W F
R155,255	0B01857A	RK 1K 1/4W J
R166,266	0B09558A	RM 4.42K 1/4W F
R168,172 268,272	0B05625A	RK 220K 1/4W J
R175,275	0B05615A	RK 22K 1/4W J
C122,123 222,223	0B05884A	CE 470μ 10V
C124,224	0B05659A	CM 5600P 50V J
C125,135 225,235	0B09240A	CP 0.033μ 100V G
C126,136 226,236	0B05681A	CM 0.01μ 50V J
C127,137 227,237	0B01862A	CE 22μ 16V
C128,139 228,239	0B01402A	CE 4.7μ 25V
C129,229	0B05583A	CM 0.033μ 50V J
C130,153 230,253	0B01603A	CM 0.1μ 50V K
C131,132 231,232	0B09567A	CE 0.33μ 50V K (LN)
C138,238	0B09566A	CM 0.13μ 50V J
C140,240	0B05796A	CM 0.047μ 50V J
C141,241	0B05914A	CM 0.15μ 50V J
C142,242	0B09312A	CP 0.01μ 100V G
C144,244	0B09282A	CC 100P 50V K
C146,167 168,246 267,268	0B09814A	CE 1μ 50V (LN)
C147,247	0B09817A	CE 33μ 10V (LN)
	0B08714A	IC Socket 16P (4)
	0E00037A	Earth Lug B-5 (1)
	— Rec. Dolby NR —	
IC101,102 201,202	0B06338A	IC LA2730
Q103,105 106,107 203,205 206,207	0B01872A	TR 2SC945 (L)
Q104,204	0B06299A	TR 2SC2878
D105,106 205,206	0B01909A	SiD 1S1555
L101,201	0B06676A	Inductor 36mH G
R101,201	0B09420A	RM 2.2K 1/4W F
R102,202	0B09811A	RM 6.04K 1/4W F
R103,117 203,217	0B01681A	RK 3.3K 1/4W J
R104,173 204,273	0B01857A	RK 1K 1/4W J
R105,122 205,222	0B09557A	RM 13K 1/4W F
R106,107 120,124	0B05641A	RK 47K 1/4W J

Schematic Ref. No.	Part No.	Description
R159,206 207,220 224,259	0B05641A	RK 47K 1/4W J
R108,125 208,225	0B09271A	RK 6.2K 1/4W J
R109,111 126,127 209,211 226,227	0B05620A	RK 270K 1/4W J
R110,210	0B01683A	RK 15K 1/4W J
R118,128 161,163 218,228 261,263	0B01888A	RK 10K 1/4W J
R119,219	0B09565A	RK 1.6K 1/4W J
R121,221	0B05794A	RK 680 1/4W J
R129,229	0B05776A	RK 1M 1/4W J
R130,162 230,262	0B05615A	RK 22K 1/4W J
R134,234	0B01856A	RK 8.2K 1/4W J
R156,256	0B09558A	RM 4.42K 1/4W F
R158,171 258,271	0B05625A	RK 220K 1/4W J
C101,201	0B09409A	CP 1800P 100V G
C102,111 202,211	0B09240A	CP 0.033μ 100V G
C103,112 203,212	0B05681A	CM 0.01μ 50V J
C104,113 204,213	0B01862A	CE 22μ 16V
C105,114 205,214	0B01402A	CE 4.7μ 25V
C106,206	0B05583A	CM 0.033μ 50V J
C107,151 207,251	0B01603A	CM 0.1μ 50V K
C108,109 208,209	0B09567A	CE 0.33μ 50V K (LN)
C110,210	0B09594A	CM 0.03μ 50V J
C115,215	0B09566A	CM 0.13μ 50V J
C116,216	0B05796A	CM 0.047μ 50V J
C117,217	0B05914A	CM 0.15μ 50V J
C119,134 219,234	0B09223A	CE 1μ 50V (LN)
C120,121 220,221	0B05884A	CE 470μ 10V
C133,233	0B09783A	CP 820P 100V J
C145,245	0B09814A	CE 1μ 50V (LN)
C148,248	0B09816A	CE 10μ 16V (LN)
	0B08714A	IC Socket 16P (4)
	— Line Amp. —	
IC301	0B06287A	IC TA75558P-R
Q120,220	0B01872A	TR 2SC945 (L)
L110,210	0B06676A	Inductor 36mH G
R180,184 280,284	0B01857A	RK 1K 1/4W J
R181,182 281,282	0B05625A	RK 220K 1/4W J
R183,283	0B09582A	RM 43.2K 1/4W F
R185,285	0B09507A	RM 3.57K 1/4W F
R186,286 310	0B01888A	RK 10K 1/4W J
R187,287	0B01856A	RK 8.2K 1/4W J
R307,309 312,313	0B01889A	RK 100K 1/4W J
R308	0B05784A	RK 560K 1/4W J
R311	0B05508A	RK 56K 1/4W J
C180,280	0B09814A	CE 1μ 50V (LN)
C181,281	0B09815A	CE 47μ 6.3V (LN)
C182,282	0B09409A	CP 1800P 100V G
C302	0B01412A	CE 10μ 16V
	— Miscellaneous —	
	0B07992E	Dolby NR P.C.B.

6.15. Logic & Power P.C.B. Ass'y

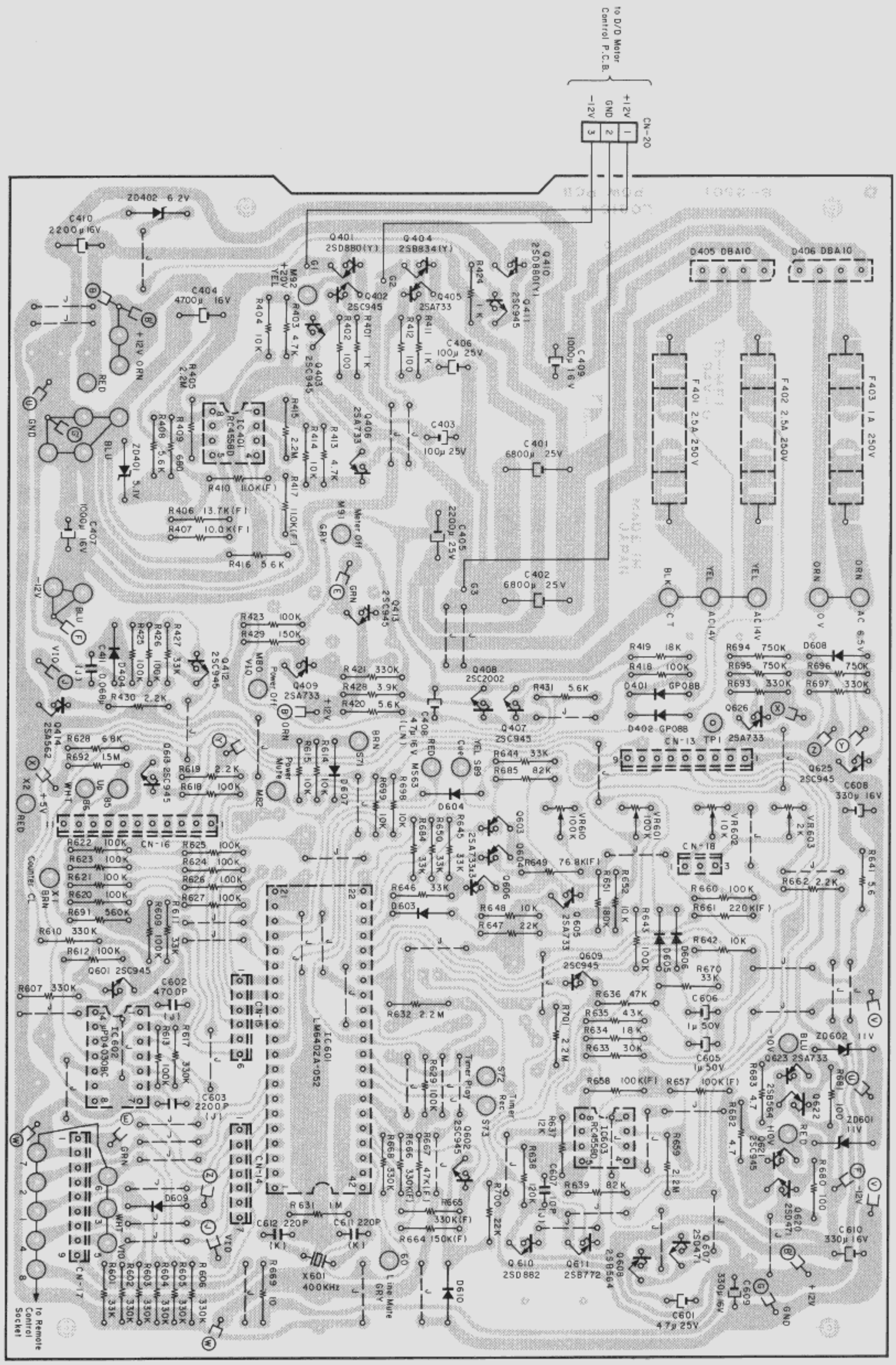

Fig. 6.15

Schematic Ref. No.	Part No.	Description
	BA04775A	Logic & Power P.C.B. Ass'y (U.S.A., Canada & Others)
	BA04774A	Logic & Power P.C.B. Ass'y (Japan)
	BA04776A	Logic & Power P.C.B. Ass'y (UK, Australia & 220V Class 2)
	— DC Supply —	
IC401	0B06124B	IC RC4558D
Q402,403 407,411 412,413	0B06100A	TR 2SC945 (A)
Q405,406 409	0B06013A	TR 2SA733
Q408	0B06322A	TR 2SC2002
Q414	0B06202A	TR 2SA562 (Y)
ZD401	0B06058A	ZD 5.1V YZ051
ZD402	0B06314A	ZD 6.2V YZ062
D401,402	0B06109A	SiD GP08B
D404	0B01909A	SiD 1S1555
D405,406	0B06282A	Diode Bridge DBA10
R401,411 424	0B01857A	RK 1K 1/4W J
R402,412	0B01679A	RK 100 1/4W J
R403,413	0B01846A	RK 4.7K 1/4W J
R404,414	0B01888A	RK 10K 1/4W J
R405,415	0B05671A	RK 2.2M 1/4W J
R406	0B09523A	RM 13.7K 1/4W F
R407	0B09203A	RM 10K 1/4W F
R408,416 420,431	0B01887A	RK 5.6K 1/4W J
R409	0B05794A	RK 680 1/4W J
R410,417	0B09504A	RM 11K 1/4W F
R418,423 425,426	0B01889A	RK 100K 1/4W J
R419	0B05560A	RK 18K 1/4W J
R421	0B05627A	RK 330K 1/4W J
R427	0B05509A	RK 33K 1/4W J
R428	0B05675A	RK 3.9K 1/4W J
R429	0B05626A	RK 150K 1/4W J
R430	0B05622A	RK 2.2K 1/4W J
C401,402	0B09374A	CE 6800μ 25V
C403,406	0B01272A	CE 100μ 25V
C404	0B09377A	CE 4700μ 16V
C405	0B05654A	CE 2200μ 25V
C407,409	0B01397A	CE 1000μ 16V
C408	0B09218A	CE 47μ 16V (LN)
C410	0B01406A	CE 2200μ 16V
C411	0B05682A	CM 0.068μ 50V J
	0B08515A	Insu-Lock (2)
	— Logic —	
IC601	0B06324A	IC LM6402A-052
IC602	0B06317A	IC μPD4030BC
IC603	0B06124B	IC RC4558D
Q601,602 609,613 621,625	0B06100A	TR 2SC945 (A)
Q603,604 605,606 623,626	0B06013A	TR 2SA733
Q607,620	0B06066A	TR 2SD471
Q608,622	0B06069A	TR 2SB564
Q610	0B06316A	TR 2SD882
Q611	0B06303A	TR 2SB772
ZD601,602	0B06231A	ZD 11V RD11EB2
D603-610	0B01909A	SiD 1S1555 (8)
X601	0B08908A	Xtal KBR400BT
VR601,610	0B07257A	Semi-fixed VR 100K
VR602	0B07256A	Semi-fixed VR 10K
VR603	0B07329A	Semi-fixed VR 2K
R601,611 644,645 646,650 670,684	0B05509A	RK 33K 1/4W J
R602-607 610,617 668,693 697	0B05627A	RK 330K 1/4W J (11)
R609,612 613,618 620-627 629,643 660	0B01889A	RK 100K 1/4W J (15)

Schematic Ref. No.	Part No.	Description
R614,615 642,648 652,698 699	0B01888A	RK 10K 1/4W J
R619,662	0B05622A	RK 2.2K 1/4W J
R628	0B01682A	RK 6.8K 1/4W J
R631	0B05776A	RK 1M 1/4W J
R632,659 701	0B05671A	RK 2.2M 1/4W J
R633	0B09075A	RK 30K 1/4W J
R634	0B05560A	RK 18K 1/4W J
R635	0B09750A	RK 43K 1/4W J
R636	0B05641A	RK 47K 1/4W J
R637	0B09263A	RK 12K 1/4W J
R638	0B05621A	RK 120K 1/4W J
R639,685	0B05668A	RK 82K 1/4W J
R641	0B09217A	RF 5.6 1/4W J
R647,700	0B05615A	RK 22K 1/4W J
R649	0B09751A	RM 76.8K 1/4W F
R651	0B05640A	RK 180K 1/4W J
R657,658	0B09305A	RM 100K 1/4W F
R661	0B09472A	RM 220K 1/4W F
R664	0B09300A	RM 150K 1/4W F
R665,666	0B09756A	RM 330K 1/4W F
R667	0B09451A	RM 47K 1/4W F
R669	0B09216A	RF 10 1/4W J
R680,681	0B09215A	RF 100 1/4W J
R682,683	0B09321A	RF 4.7 1/4W J
R691	0B05784A	RK 560K 1/4W J
R692	0B09380A	RK 1.5M 1/4W J
R694,695 696	0B09755A	RK 750K 1/4W J
C601	0B01402A	CE 4.7μ 25V
C602	0B05652A	CM 4700P 50V J
C603	0B01802A	CM 2200P 50V J
C605,606	0B01405A	CE 1μ 50V
C607	0B09277A	CC 10P 50V J
C608,609 610	0B01502A	CE 330μ 16V
C611,612	0B09283A	CC 220P 50V K
CN13	0B08645A	9P-T Post
CN14	0B08643A	7P-T Post
CN15	0B02285A	6P-T Post GRN
CN16	0B08655A	11P-T Post
CN17	0B02287A	9P-T Post GRN
CN18	0B08653A	3P-T Post
	0B08964A	TR Mica TO-126 (2)
	0E00507A	Nut Hex. M3 (2)
	0E00624A	M3x10 ⊕ Pan (2A) (2)
	0J04485A	Heat Sink B (1)
	— Miscellaneous —	
	0B02501D	Logic & Power P.C.B.
F401,402	0B08369A	Fuse 3A 250V (U.S.A., Canada & Others)
F401,402	0B08781A	Fuse 3A 250V (Japan)
F401,402	0B02240A	Fuse T1.25A 250V (UK, Australia & 220V Class 2)
F403	0B08374A	Fuse 1A 250V (U.S.A., Canada & Others)
F403	0B08686A	Fuse 1A 250V (Japan)
F403	0B08457A	Fuse T500mA 250V (UK, Australia & 220V Class 2)
CN20	0B08672A	3P-H Connector
	0E00857A	BT M3x6 ⊕ Binding (2)
	0B08349A	Fuse Clip (UK, Australia & 220V Class 2) (6)
	0M04187A	Fuse Label 3A 250V (U.S.A., Canada, Others & Japan)
	0M04096C	Fuse Label T500mA (UK, Australia & 220V Class 2) (1)

Schematic Ref. No.	Part No.	Description
	0M04391A	Fuse Label T1.25A 250V (UK, Australia & 220V Class 2) (2)
Q401,410	0B06255A	TR 2SD880 (Y)
Q404	0B06256A	TR 2SB834 (Y,GR)
	0B08601A	TR Mica TO-220 (3)
	0B08602A	TR Bushing TO-220 (3)
	0E00037A	Earth Lug B-5 (1)
	0E00172A	Washer 3mm Toothed Lock (1)
	0E00507A	Nut Hex. M3 (3)
	0E00608A	M3x10 ⊕ Pan (3A) (3)
	0E00857A	BT M3x6 ⊕ Binding (1)
	0J04484B	Heat Sink (1)

Schematic Ref. No.	Part No.	Description
	BA04763A	Main P.C.B. Ass'y
	— PB Eq. Amp. —	
Q106,206	0B06376A	FET 2SK170 (GR)
Q107,207	0B06180A	TR 2SA970 (GR)
Q108,208	0B06142A	TR 2SC2240 (BL)
L103,203	0B00068A	Trap Coil 10.5mH
VR104,204	0B07233A	Semi-fixed VR 10K
R147,154 247,254	0B01889A	RK 100K 1/4W J
R148,248	0B09810A	RM 82 1/4W F
R150,250	0B09768A	RM 3.92K 1/4W F
R151,251	0B09471A	RM 205K 1/4W F
R152,252	0B01857A	RK 1K 1/4W J
R153,157 253,257	0B01888A	RK 10K 1/4W J
R155,255	0B01933A	RK 220 1/4W J
R156,256	0B05575A	RK 560 1/4W J
R158,160 258,260	0B09162A	RF 82 1/4W J
R159,259	0B09431A	RM 8.06K 1/4W F
C123,223	0B05885A	CE 100μ 10V
C124,224	0B09281A	CC 150P 50V K
C125,225	0B05841A	CE 330μ 10V
C126,226	0B09812A	CC 2P 50V C
C127,227	0B09833A	CE 4.7μ 25V (LN)
C128,228	0B01804A	CM 3900P 50V J
C129,229	0B09247A	C 220P 50V J
C130,131 230,231	0B01392A	CE 470μ 16V
C132,232	0B09490A	CP 0.015μ 100V G
	— Rec. Amp. —	
IC301	0B06387A	IC RC2043DD
Q101,102 201,202	0B06299A	TR 2SC2878
D101,201	0B06181A	SiD 1SS53
L101,102 201,202	0B06705A	Trap Coil 1.05mH
R101,103 114,201 203,214	0B01683A	RK 15K 1/4W J
R102,202	0B09604A	RM 6.98K 1/4W F
R104,106 204,206	0B05640A	RK 180K 1/4W J
R105,116 205,216	0B01679A	RK 100 1/4W J
R107,207	0B01854A	RK 39K 1/4W J
R108,208	0B05675A	RK 3.9K 1/4W J
R109,209	0B05560A	RK 18K 1/4W J
R110,210	0B05691A	RK 390 1/4W J
R111,211	0B09230A	RM 1.5K 1/4W F
R112,212	0B01888A	RK 10K 1/4W J
R113,213	0B05560A	RK 18K 1/4W J
R115,215	0B01682A	RK 6.8K 1/4W J
R117,217	0B05936A	RK 10 1/4W J
R970	0B01933A	RK 220 1/4W J
C101,201	0B09783A	CP 820P 100V J
C102,202	0B05681A	CM 0.01μ 50V J
C103,203	0B05583A	CM 0.033μ 50V J
C104,204	0B09814A	CE 1μ 50V (LN)
C105,205	0B09815A	CE 47μ 6.3V (LN)
C106,206	0B05685A	CM 0.082μ 50V J
C107,207	0B05659A	CM 5600P 50V J
C108,208	0B01914A	CM 3300P 50V J
C109,209	0B09834A	CP 2200P 100V J
C110,210	0B09286A	CP 470P 50V K
C111,211	0B09322A	CP 330P 100V J
C301,302	0B01502A	CE 330μ 16V
	— Bias Osc. —	
Q301,302	0B01872A	TR 2SC945 (L)
Q303	0B06013A	TR 2SA733
Q304	0B06202A	TR 2SA562 (Y)
D355	0B06181A	SiD 1SS53
T301	0B06613A	Osc. Coil
R303,304	0B05668A	RK 82K 1/4W J
R305,306	0B09212A	RF 2.2 1/4W J
R307	0B01889A	RK 100K 1/4W J
R308	0B05692A	RK 68K 1/4W J
R309	0B09296A	RF 39 1/2W J
R310	0B09295A	RF 82 2W J
R311	0B05575A	RK 560 1/4W J
R312	0B01681A	RK 3.3K 1/4W J
R313	0B05560A	RK 18K 1/4W J

Schematic Ref. No.	Part No.	Description
R905	0B01857A	RK 1K 1/4W J
C303	0B01402A	CE 4.7μ 25V
C304	0B09254A	CP 0.068μ 100V J
C305	0B09405A	CP 0.022μ 100V J
C306,307	0B09191A	CP 4700P 100V G
	0J04450A	Osc. Coil Cap (1)
	— Meter Amp. —	
IC303	0B06216A	IC μPC4556C
IC312,313	0B06280A	IC MSM4066RS
Q105,205 305	0B01872A	TR 2SC945 (L)
ZD101,201	0B06058A	ZD 5.1V YZ051
D102,103 104,202 203,204 354	0B06181A	SiD 1SS53
VR101,201	0B07256A	Semi-fixed VR 10K
VR102,202	0B07269A	Semi-fixed VR 50K
VR103,203	0B07341A	Semi-fixed VR 5K
R123,124 223,224	0B01856A	RK 8.2K 1/4W J
R125,126 225,226 316,317 318	0B01889A	RK 100K 1/4W J
R127,165 227,265	0B01920A	RK 100K 1/4W VJ
R128,228 319	0B05615A	RK 22K 1/4W J
R129,229	0B09432A	RM 8.25K 1/4W F
R130,132 230,232	0B05625A	RK 220K 1/4W J
R131,137 231,237	0B01857A	RK 1K 1/4W J
R133,233	0B01887A	RK 5.6K 1/4W J
R134,234	0B05627A	RK 330K 1/4W J
R135,235	0B09510A	RM 66.5K 1/4W F
R136,236	0B09446A	RM 33.2K 1/4W F
R975	0B05509A	RK 33K 1/4W J
C114,115 116,214 215,216	0B01405A	CE 1μ 50V
C117,217	0B09288A	CC 1000P 50V K
C118,218	0B09218A	CE 47μ 16V (LN)
C119,219	0B09385A	CE 0.33μ 50V (LN)
C310,311	0B01403A	CE 47μ 16V
C347	0B01862A	CE 22μ 16V
	— Headphone Amp. —	
IC302	0B06217A	IC RC4560D
Q103,203	0B06069A	TR 2SB564
Q104,204	0B06066A	TR 2SD471
R119,120 219,220	0B01889A	RK 100K 1/4W J
R121,221	0B01706A	RK 47 1/4W J
R122,222	0B09331A	RF 8.2 1/4W J
R314,315	0B09216A	RF 10 1/4W J
C113,213	0B09586A	CC 2200P 50V K
C308,309	0B01400A	CE 100μ 16V
	— Tone Osc. —	
IC305	0B06127A	IC RC4559D
IC306	0B06219A	IC μPD4081BC
Q314	0B01872A	TR 2SC945 (L)
Q315	0B06013A	TR 2SA733
D306	0B06181A	SiD 1SS53
L301	0B03919B	Inductor 36mH
VR302	0B07270A	Semi-fixed VR 20K
VR303	0B07269A	Semi-fixed VR 50K
R353,354 359	0B09315A	RM 332K 1/4W F
R355	0B09583A	RM 97.6K 1/4W F
R356,363 367,371	0B01889A	RK 100K 1/4W J
R357,368	0B05615A	RK 22K 1/4W J
R358	0B01888A	RK 10K 1/4W J
R360	0B01682A	RK 6.8K 1/4W J
R361,362 969	0B05508A	RK 56K 1/4W J
R364	0B09527A	RK 130K 1/4W J
R365	0B05676A	RK 390K 1/4W J
R366	0B05622A	RK 2.2K 1/4W J
R369	0B09263A	RK 12K 1/4W J
R370	0B05509A	RK 33K 1/4W J
R372,373	0B09215A	RF 100 1/4W J

Schematic Ref. No.	Part No.	Description
C317	0B09836A	CP 360P 100V J
C318	0B09584A	CP 0.018μ 100V G
C319	0B05582A	CM 0.022μ 50V J
C320	0B01802A	CM 2200P 50V J
C321	0B09045A	CM 0.027μ 50V J
C322	0B05813A	CM 0.056μ 50V J
C323	0B01780A	CM 0.1μ 50V J
C324	0B09302A	C 100P 100V J
C325	0B09322A	CP 330P 100V J
C326	0B01914A	CM 3300P 50V J
C327,328	0B01412A	CE 10μ 16V
	— Azimuth —	
IC307	0B06124B	IC RC4558D
IC308	0B06216A	IC μPC4556C
IC309	0B06213A	IC TC4013BP
Q316,333	0B06013A	TR 2SA733
Q317,318 319,330 331,332 334,335	0B01872A	TR 2SC945 (L)
D105,106 205,206 308,309 310 335-349 351,352 353,356	0B06181A	SiD 1SS53 (26)
VR304	0B07270A	Semi-fixed VR 20K
R138,139 238,239 935,937 939,942 946,956 958,959 961	0B01889A	RK 100K 1/4W J
R140,240 384,385	0B01846A	RK 4.7K 1/4W J
R141,241 934,941 943,944 945,947 952	0B05625A	RK 220K 1/4W J
R142,144 145,242 244,245 377,382 938,948 949	0B01888A	RK 10K 1/4W J
R143,243	0B05622A	RK 2.2K 1/4W J
R374,375 376,381 389,950 957	0B05615A	RK 22K 1/4W J
R378,379 380,974	0B01857A	RK 1K 1/4W J
R383,971	0B01681A	RK 3.3K 1/4W J
R386,963	0B05743A	RK 27K 1/4W J
R936,955 965	0B05509A	RK 33K 1/4W J
R940	0B05784A	RK 560K 1/4W J
R951,953	0B09311A	RK 68K 1/4W J
R954	0B05626A	RK 150K 1/4W J
R960,964	0B05627A	RK 330K 1/4W J
C120,121 220,221 329,332	0B01405A	CE 1μ 50V
C122,222	0B05796A	CM 0.047μ 50V J
C330,337 341	0B01412A	CE 10μ 16V
C338,346	0B09372A	CE 2.2μ 50V
C344,345	0B01862A	CE 22μ 16V
	— Fader —	
IC304	0B06216A	IC μPC4556C
Q307,310 311,313	0B06013A	TR 2SA733
Q308,309 312	0B01872A	TR 2SC945 (L)
ZD301	0B06290A	ZD 5.6V RD5.6EB2
D302,303 304,305	0B06181A	SiD 1SS53
R326,328 330	0B05676A	RK 390K 1/4W J
R327,329	0B05640A	RK 180K 1/4W J
R331,342	0B05692A	RK 68K 1/4W J
R332	0B05641A	RK 47K 1/4W J

Schematic Ref. No.	Part No.	Description
R333,334	0B05668A	RK 82K 1/4W J
R335,337 344,347	0B01888A	RK 10K 1/4W J
R336	0B05621A	RK 120K 1/4W J
R338	0B01889A	RK 100K 1/4W J
R339,345	0B01887A	RK 5.6K 1/4W J
R340	0B05629A	RK 2.7K 1/4W J
R341	0B05627A	RK 330K 1/4W J
R343,346 350	0B05622A	RK 2.2K 1/4W J
R348	0B05691A	RK 390 1/4W J
R349	0B01857A	RK 1K 1/4W J
R351	0B05576A	RK 470 1/4W J
R352	0B05743A	RK 27K 1/4W J
C313	0B05550A	CM 1000P 50V J
C314	0B01913A	CM 1800P 50V J
C315	0B01409A	CE 47μ 25V
C316	0B01674A	CE 10μ 25V
	— Miscellaneous —	
	0B02548A	Main P.C.B.
IC310	0B06143A	IC μPD4001BC
Q109,110 209,210	0B06299A	TR 2SC2878
Q320,324	0B06013A	TR 2SA733
Q321,322 323,326 327,328	0B01872A	TR 2SC945 (L)
D314-318 320-324 327-332	0B06181A	SiD 1SS53 (16)
R161,261	0B05622A	RK 2.2K 1/4W J
R162,262 916,917 920,921	0B01887A	RK 5.6K 1/4W J
R163,263	0B05691A	RK 390 1/4W J
R164,264	0B01846A	RK 4.7K 1/4W J
R397,903 907,909 962	0B01889A	RK 100K 1/4W J
R398,906	0B05641A	RK 47K 1/4W J
R399,972 973	0B01888A	RK 10K 1/4W J
R901,932	0B05743A	RK 27K 1/4W J
R902	0B01857A	RK 1K 1/4W J
R908	0B05509A	RK 33K 1/4W J
R912,913	0B01854A	RK 39K 1/4W J
R914,915	0B05675A	RK 3.9K 1/4W J
R918,922	0B05629A	RK 2.7K 1/4W J
R919,923 924	0B05577A	RK 330 1/4W J
R925,927	0B05776A	RK 1M 1/4W J
R926,928	0B05671A	RK 2.2M 1/4W J
R967,968	0B09214A	RF 1 1/4W J
C133,233	0B09187A	CE 1μ 50V (BP)
C335	0B09286A	CC 470P 50V K
C339,340	0B01405A	CE 1μ 50V
C342,343	0B01397A	CE 1000μ 16V
C348	0B09279A	CC 22P 50V K
CN1	0B08656A	2P-T Post
CN2	0B02281A	4P-T Post RED
CN3,19	0B08654A	4P-T Post
CN4,5	0B08183A	5P-T Post
CN6	0B02284A	6P-T Post RED
CN7	0B02283A	4P-T Post BLU
CN8	0B02286A	6P-T Post BLU
CN9	0B02280A	2P-T Post BLU
CN10	0B08642A	6P-T Post
CN11	0B08645A	9P-T Post
CN12	0B02288A	9P-T Post BLU
	0B07395A	Push Switch 6-6-0 (1)
	0E00507A	Nut Hex. M3 (2)
	0E00510A	M3x8 ⊕Pan (2A) (2)
	0J04479A	Shield Case A (1)
	0J04480A	Shield Case B (1)

6.16. Main P.C.B. Ass'y

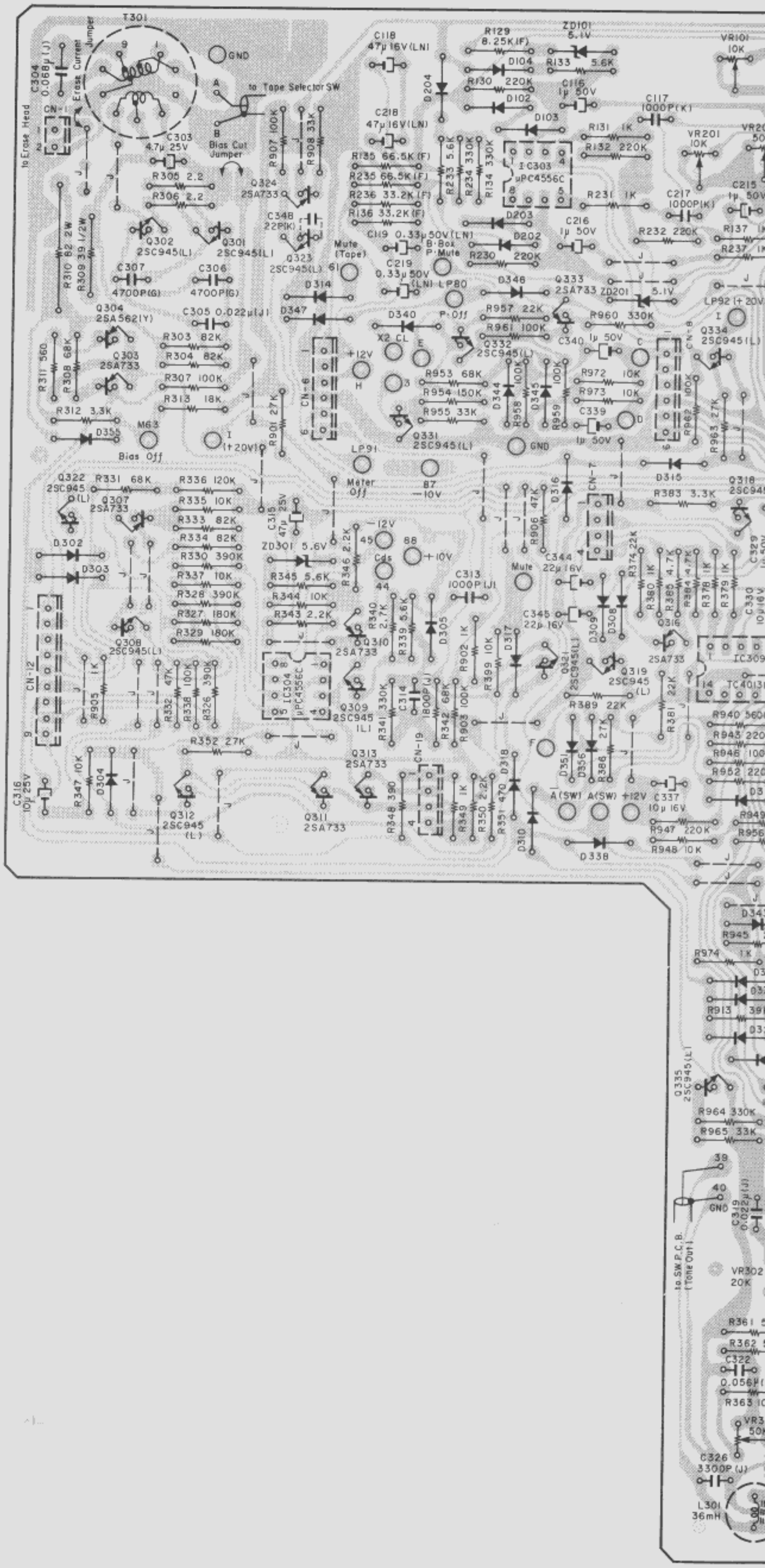

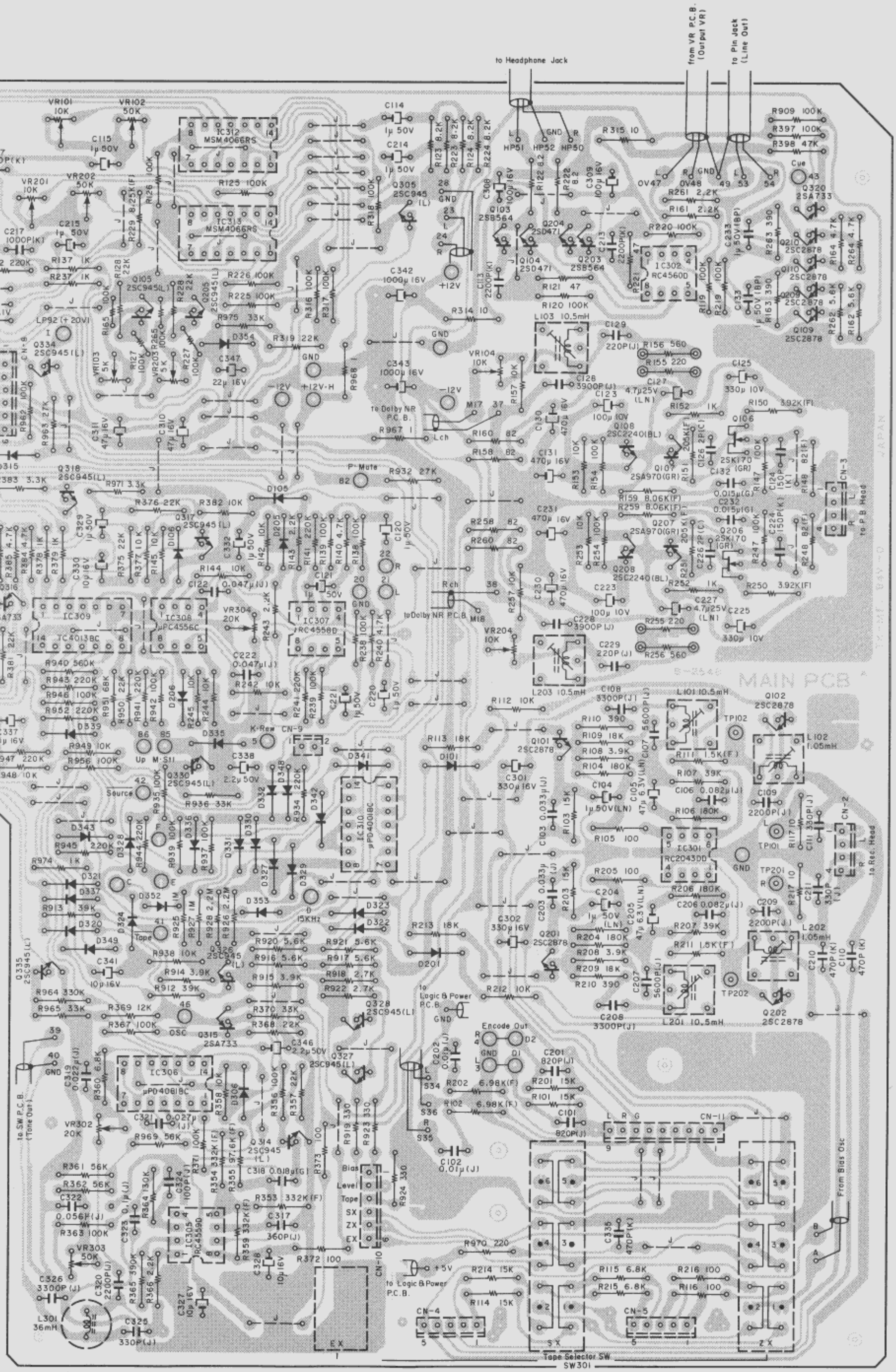
to Headphone Jack
from VR P.C.B. (Output VR)
to Pin Jack (Line Out)
MAIN PCB
to Dolby NR P.C.B.
to Logic & Power P.C.B.
to P.B Head
to Rec. Head
to SW P.C.B. (Tone Out)
From Bias Osc
Tape Selector SW
SW301
Encode Out
JAPAN

Fig. 6.16

7. SCHEMATIC DIAGRAMS

7.1. Attention to Servicemen

(1) Parts Replacement

Following parts shall be replaced with the specified ones.
Refer to the parts list.

(a) Power Supply Circuit
- Power Cord
- Power Transformer: T1

(b) Power Switch P.C.B. Ass'y
- Power Switch: SW1
- Spark Killer: M2

(c) Logic & Power P.C.B. Ass'y
- Fuses: F401, 402, 403
- Power Transistors: Q401, 404, 408, 410, 414, 607, 608, 610, 611, 620, 622
- Diode Bridges: D405, 406
- Fail Safe Type Resistors: R641, 669, 680, 681, 682, 683

(d) Main P.C.B. Ass'y
- Power Transistors: Q103, 104, 203, 204, 304
- Fail Safe Type Resistors: R122, 158, 160, 222, 258, 260 301, 302, 305, 306, 309, 310, 314, 315, 372, 373, 967, 968

(e) Shut-off P.C.B. Ass'y
- Fail Safe Type Resistor: R605
- Lamp: PL407

(f) Indicator P.C.B. Ass'y
- Power Transistors: Q901, 902, 903, 904, 905
- Fail Safe Type Resistor: R916
- Thermal Fuse: TF901

(g) Switch P.C.B. Ass'y
- Fail Safe Type Resistors: R301, 302

(h) D/D Motor Control P.C.B. Ass'y
- Power Transistors: Q501, 502, 503, 504
- Fail Safe Type Resistors: R509, 510

(i) Cassette Case Lamp

(2) Insulation Check

Before returning the repaired ZX-9 to a customer, check to insure that the exposed part is accurately insulated from the AC line by measuring the leakage current or the insulation resistance between them.

7.2. IC Block Diagrams

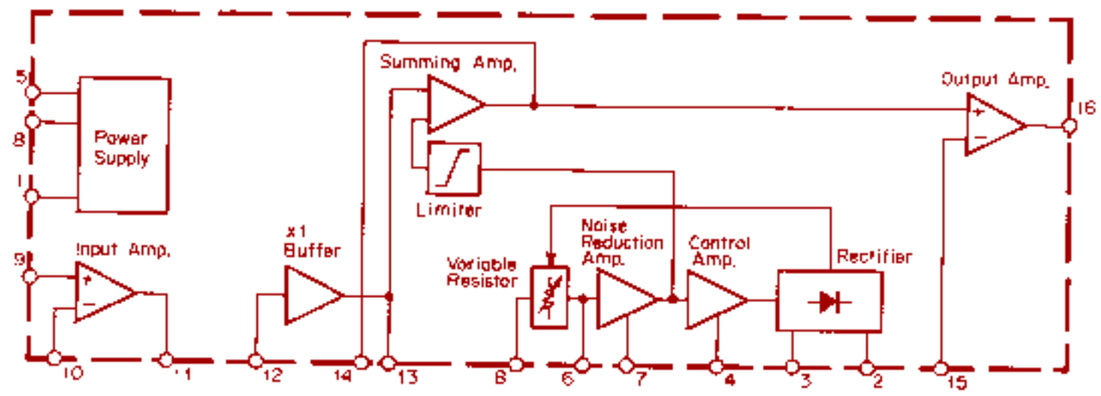

Fig. 7.2.1 Dolby NR IC LA2730

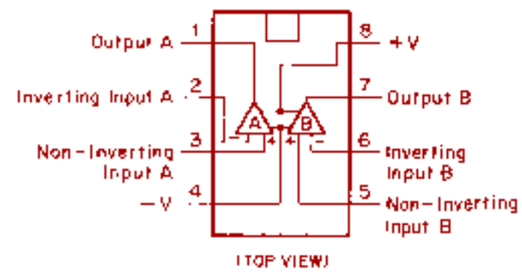

Fig. 7.2.2 Operational Amp. IC RC4558D, RC2043DD, μPC4556C, RC4560D, RC4559D, TA75558P-R

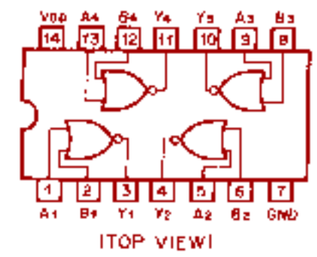

Fig. 7.2.3 NOR Gate C-MOS IC

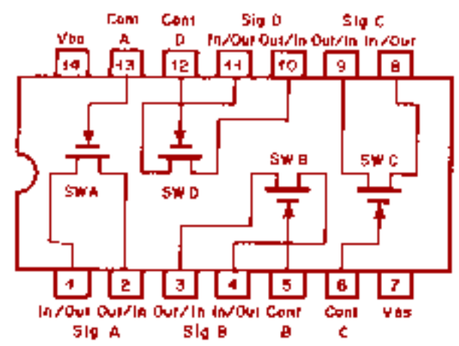

Fig. 7.2.4 Bilateral Switch C-MOS IC μPD4066BC, MSM4066RS

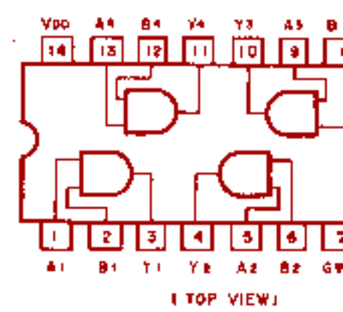

Fig. 7.2.5 AND Gate C-MOS IC

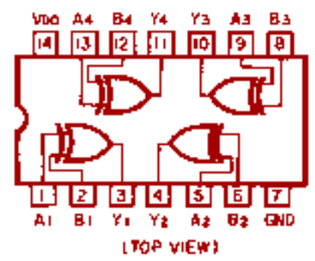

Fig. 7.2.6 Exclusive OR Gate C-MOS IC μPD4030BC

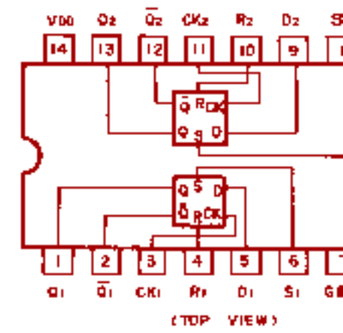

Fig. 7.2.7 D-Type Flip-Flop C TC4013BP

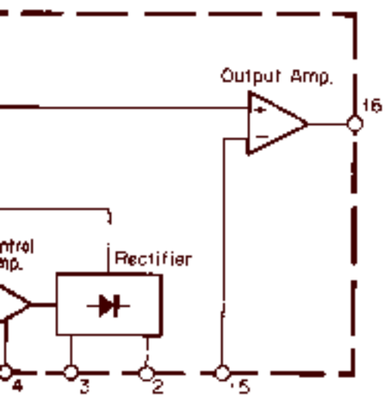

A2730

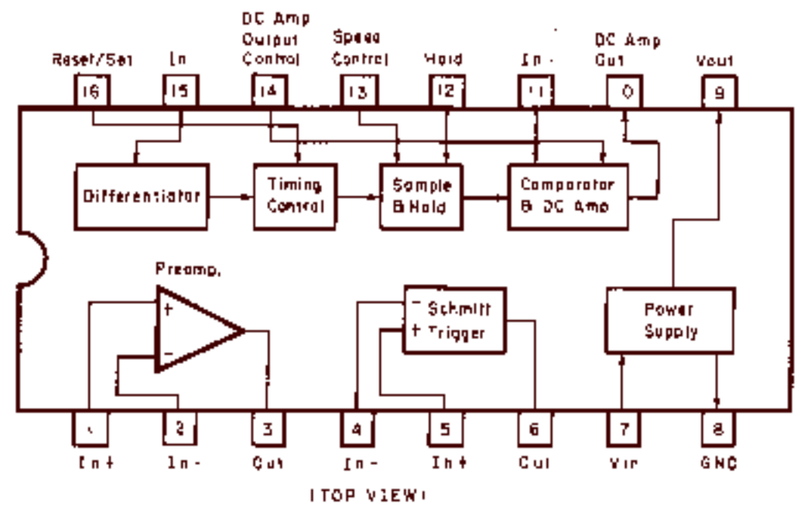

Fig. 7.2.8 Motor Control IC μPC1043C

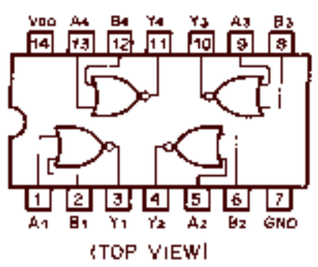

Fig. 7.2.3 NOR Gate C-MOS IC μPD4001BC

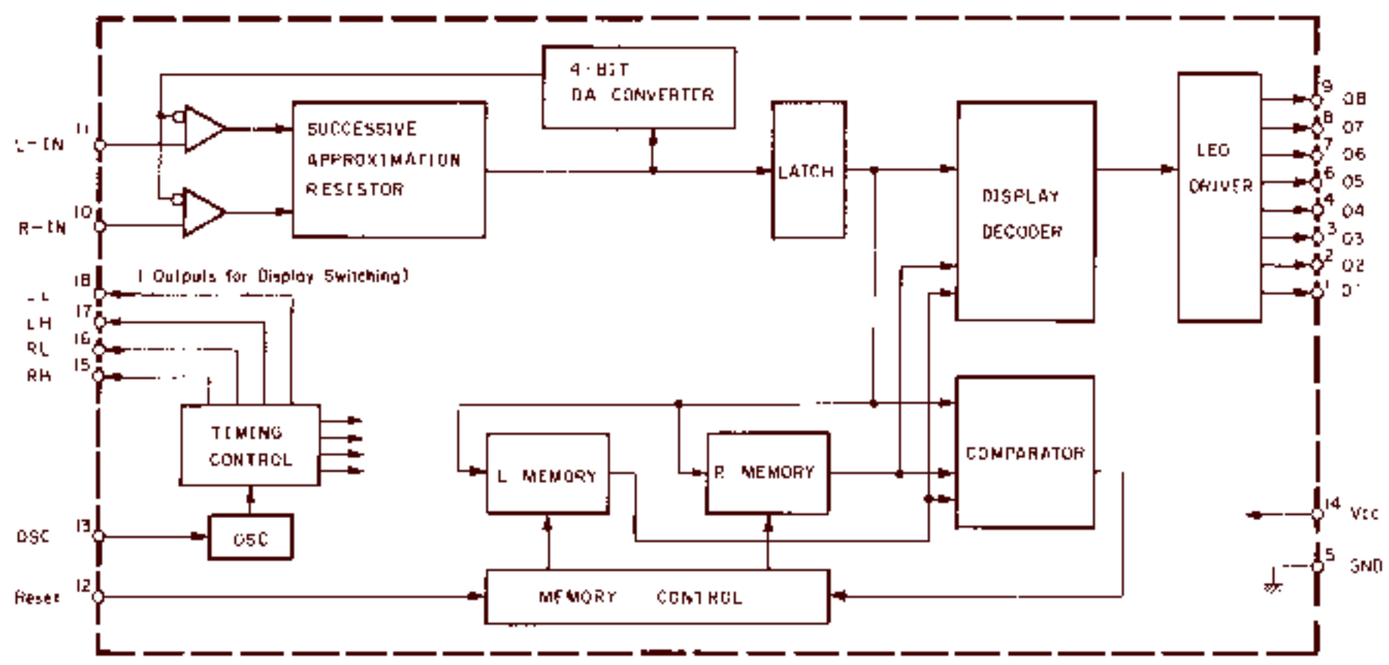

Fig. 7.2.9 Level Meter Control IC MSL9350RS

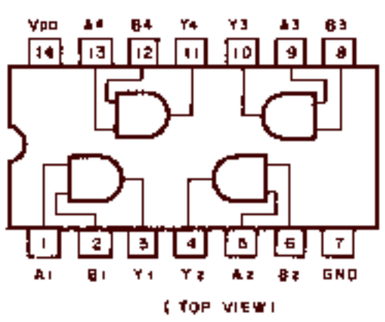

Fig. 7.2.5 AND Gate C-MOS IC μPD4081BC

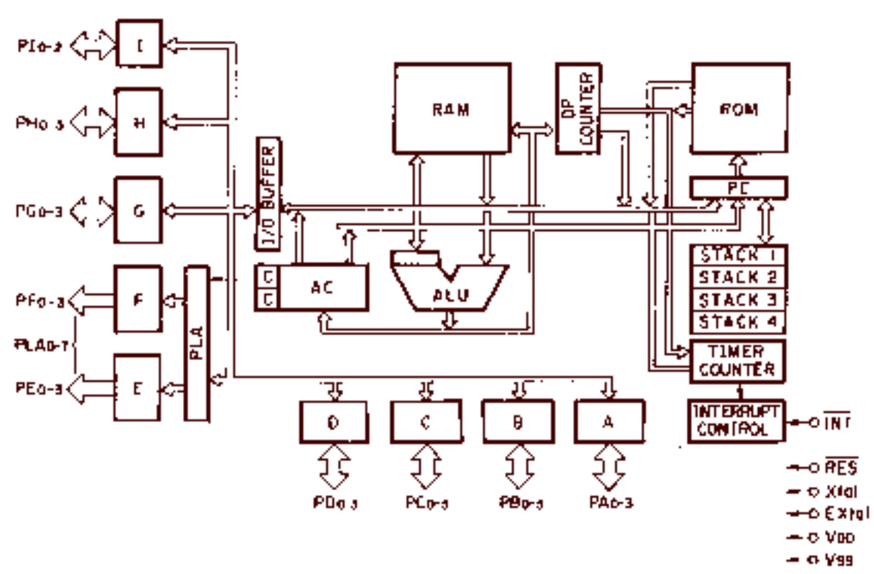

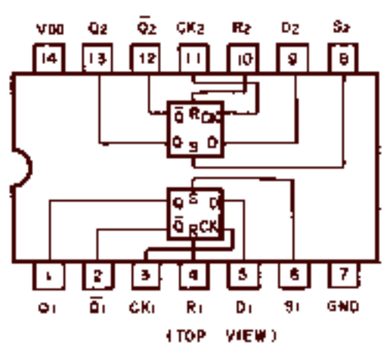

Fig. 7.2.7 D-Type Flip-Flop C-MOS IC TC4013BP

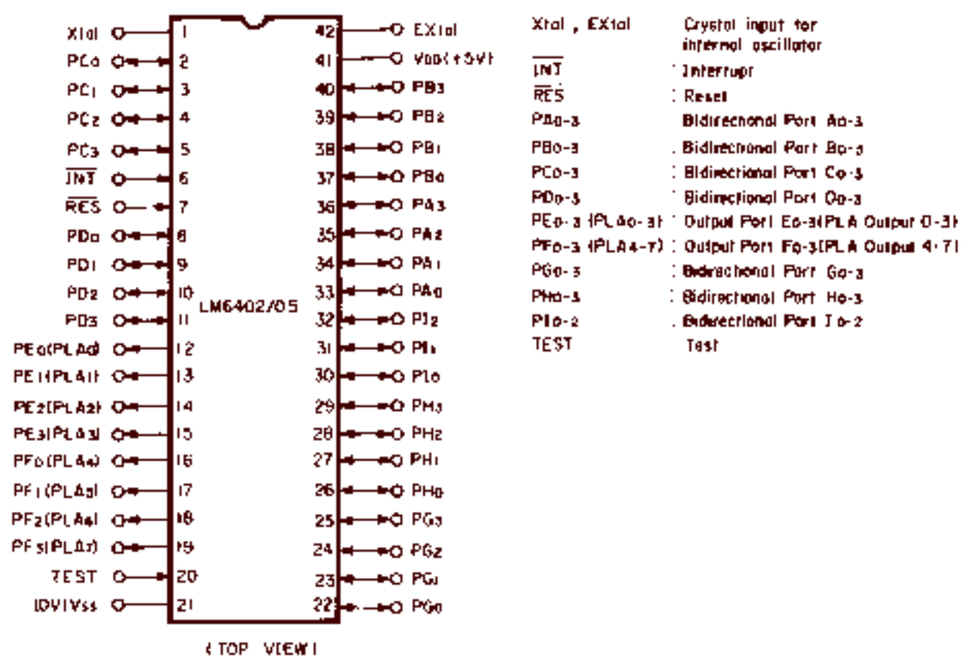

Fig. 7.2.10 4-Bit Micro-processor LM6402A-052/048

7.3. Mechanism Control Section

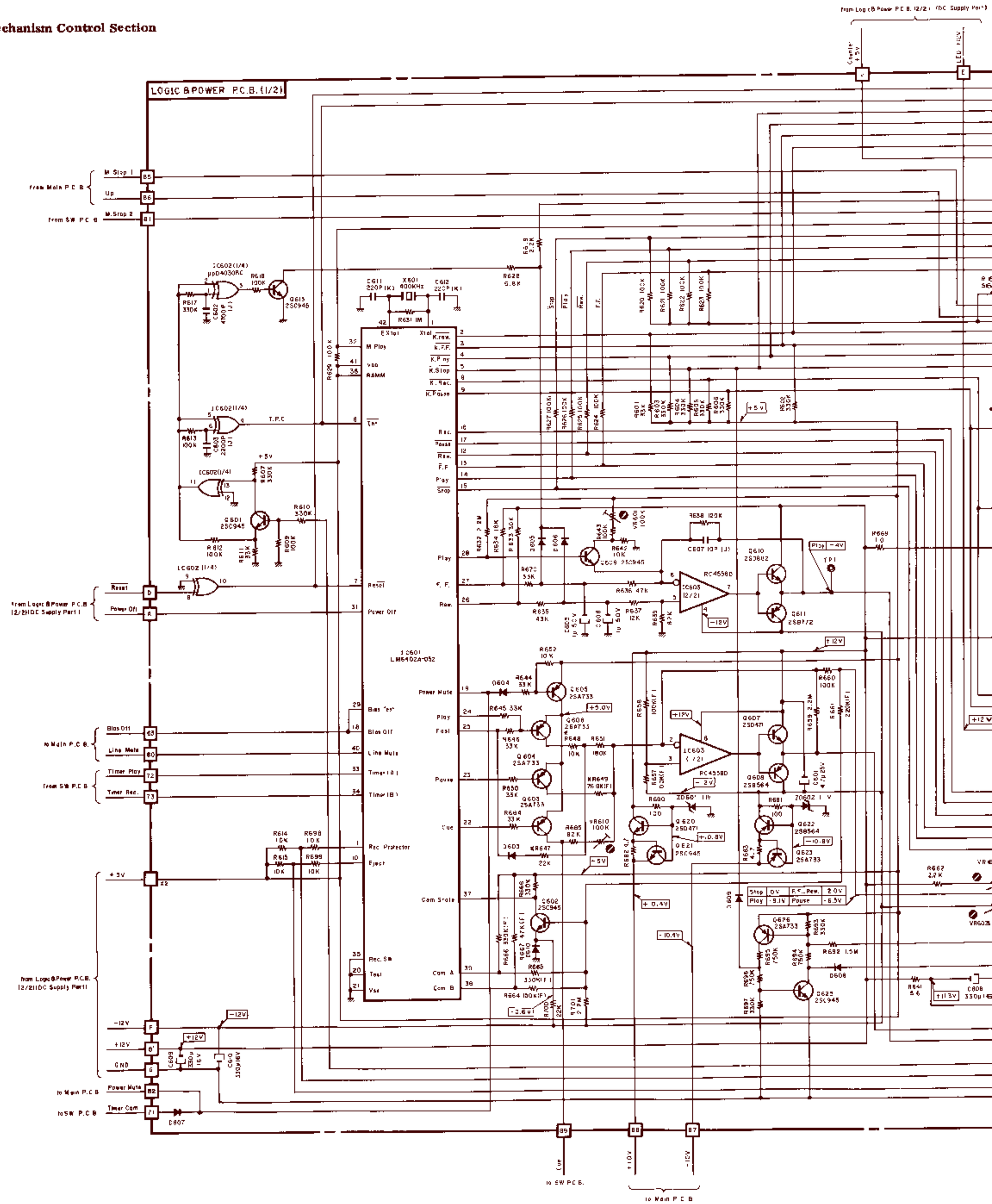

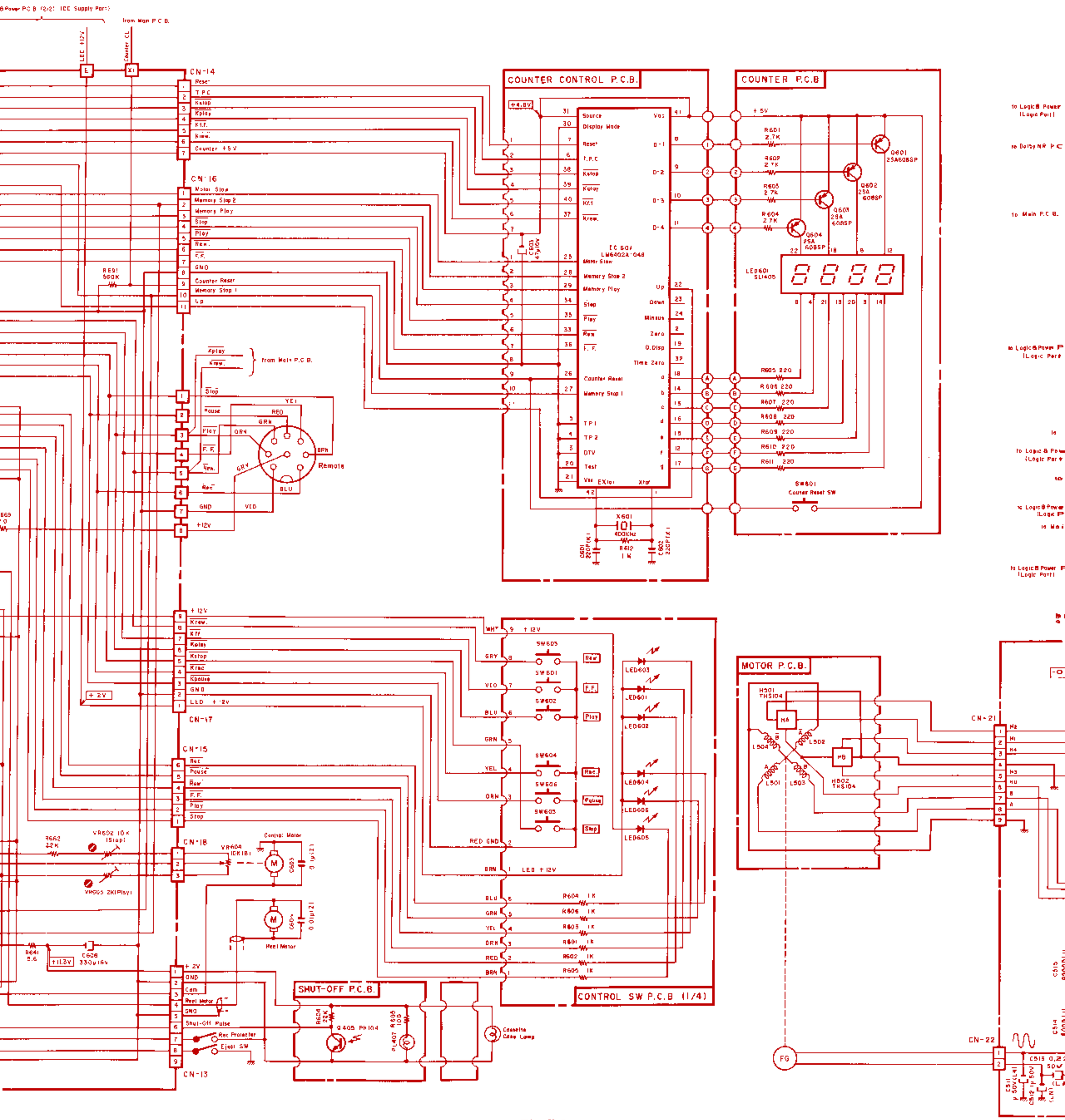
COUNTER CONTROL P.C.B.
COUNTER P.C.B
MOTOR P.C.B.
SHUT-OFF P.C.B.
CONTROL SW P.C.B (1/4)
CN-14
CN-16
CN-17
CN-15
CN-18
CN-13
CN-21
CN-22
Remote
Reel Motor
Cassette Case Lamp
Rec Protector
Eject SW
Counter Reset SW
IC 601
LM6402A-048
LED601
5L1405
X601
400KHz
R612
1K
R662
22K
VR602 10K
VR603 2K
R641
2.6
C628
330μ/16V
R654
22K
Q405 PH104
R605
10Ω
Q601
2SA608SP
Q602
2SA
608SP
Q603
2SA
608SP
Q604
2SA
608SP
R601
2.7K
R602
2.7K
R603
2.7K
R604
2.7K
R605 220
R606 220
R607 220
R608 220
R609 220
R610 220
R611 220
SW601
SW602
SW603
SW604
SW605
SW606
LED603
LED601
LED602
LED604
LED606
LED605
R604 1K
R606 1K
R603 1K
R601 1K
R602 1K
R605 1K
H501
TH5104
H502
TH5104
L501
L502
L503
L504
FG
C603
47μ/10V
C601
220P(K)
C602
220P(K)
C615
C614
C613 0.22
C611
μ 50V(LM)
C612 1μ 50V

Fig. 7.3

Notes: 1. Diode is 1SS53, 1S953, or 1S
2. Resistor and capacitor mark

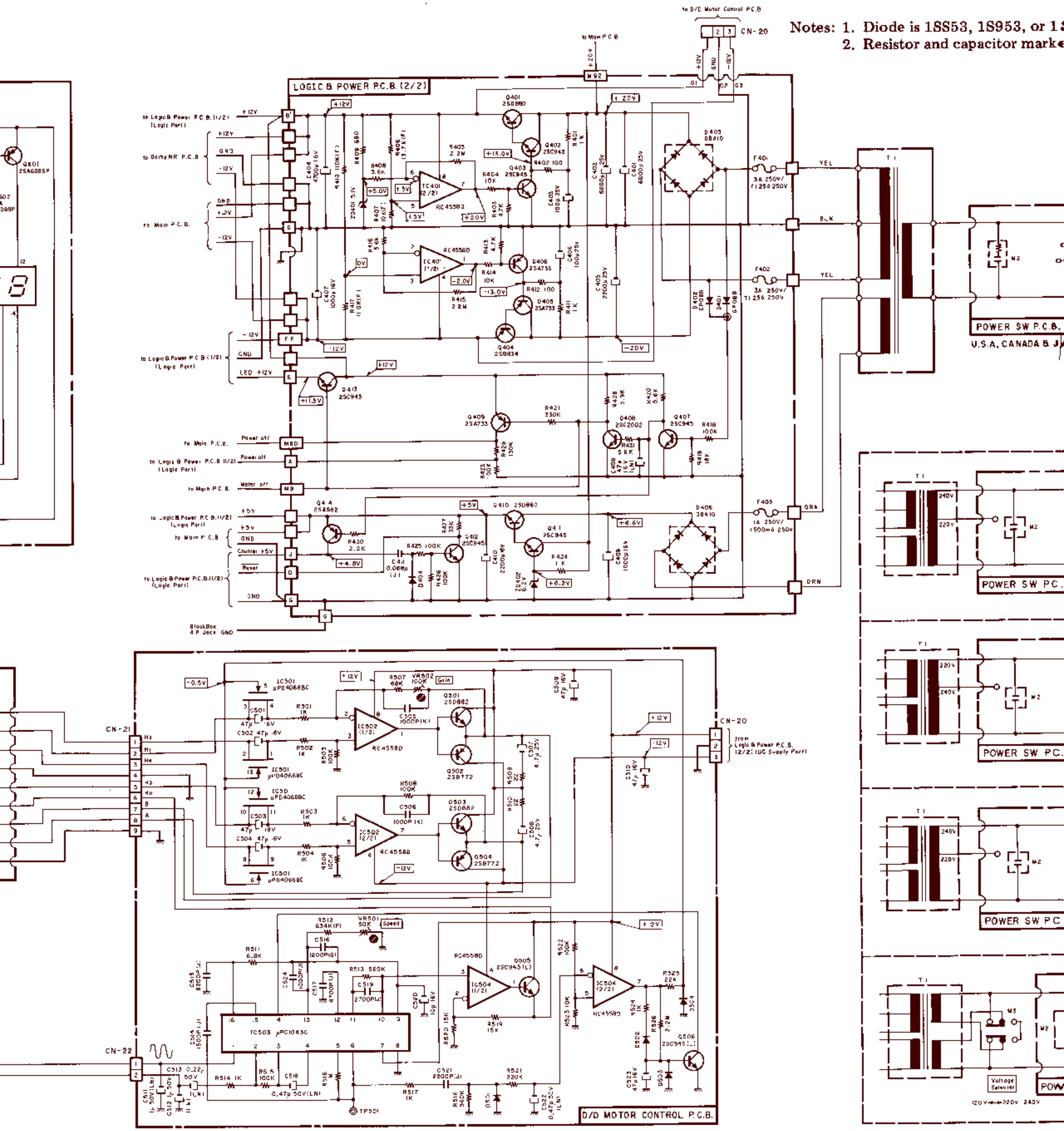

Notes: 1. Diode is 1SS53, 1S953, or 1S1555 unless otherwise specified.
2. Resistor and capacitor marked with * show typical value.

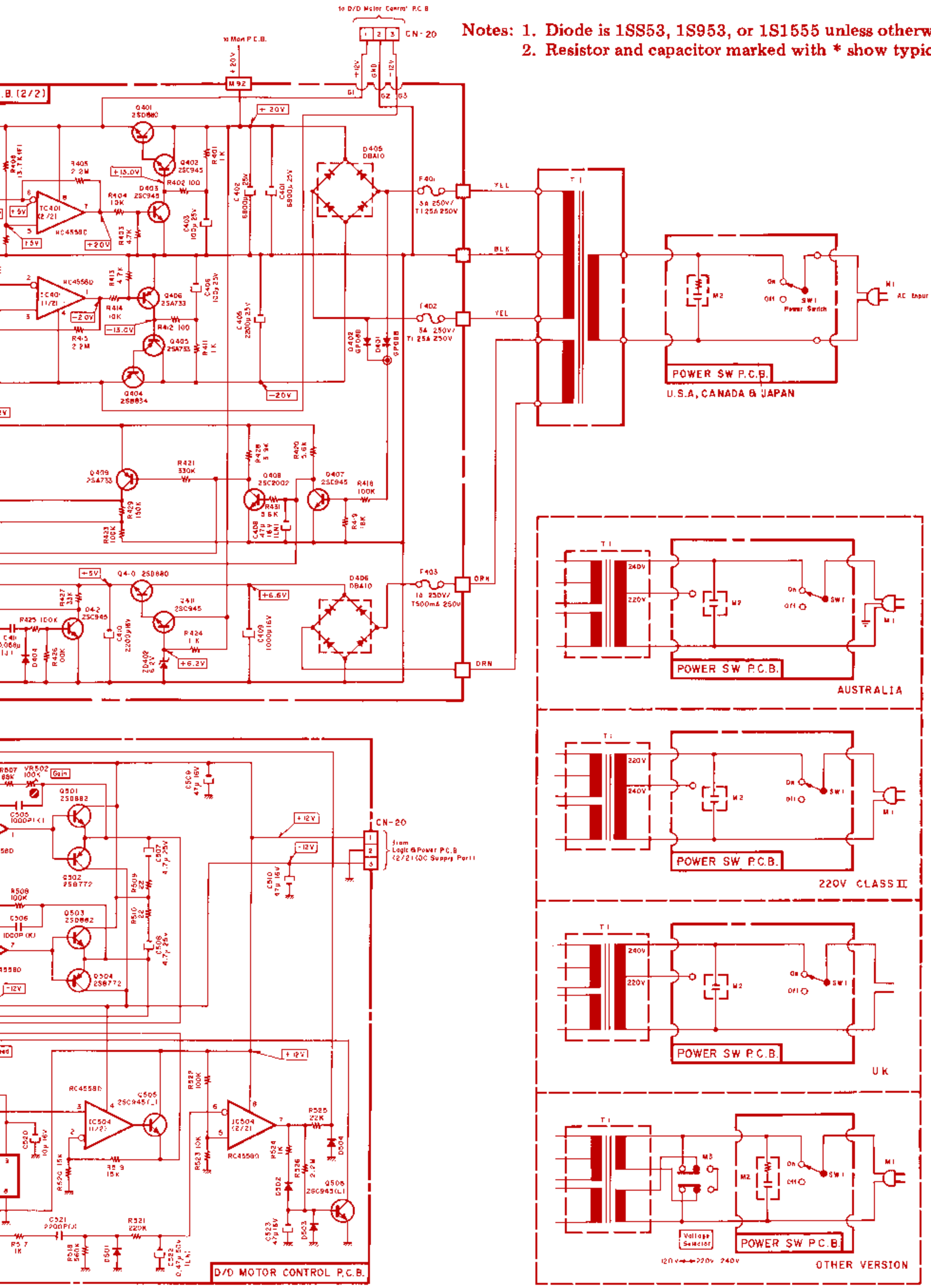

7.4. Amplifier Section

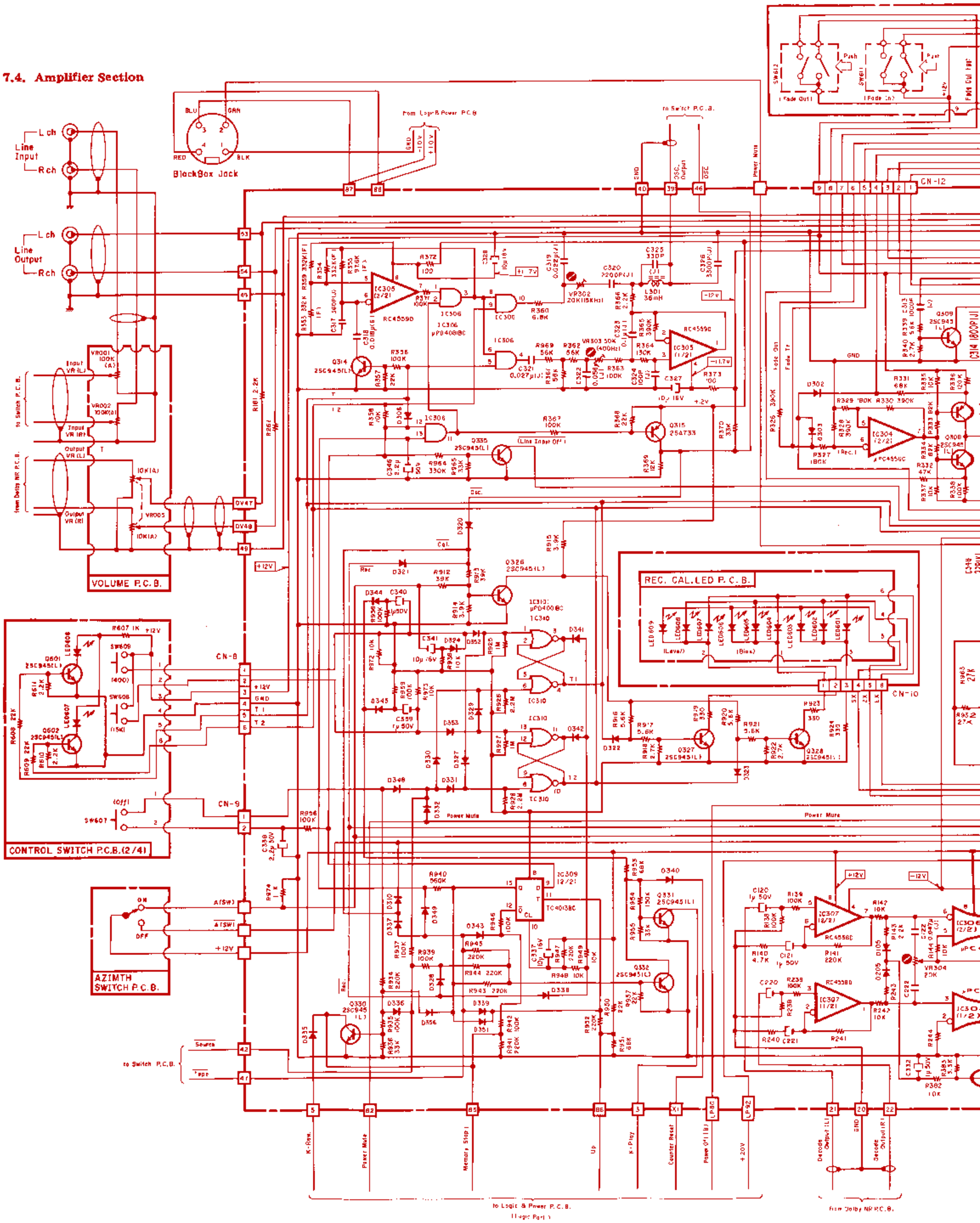

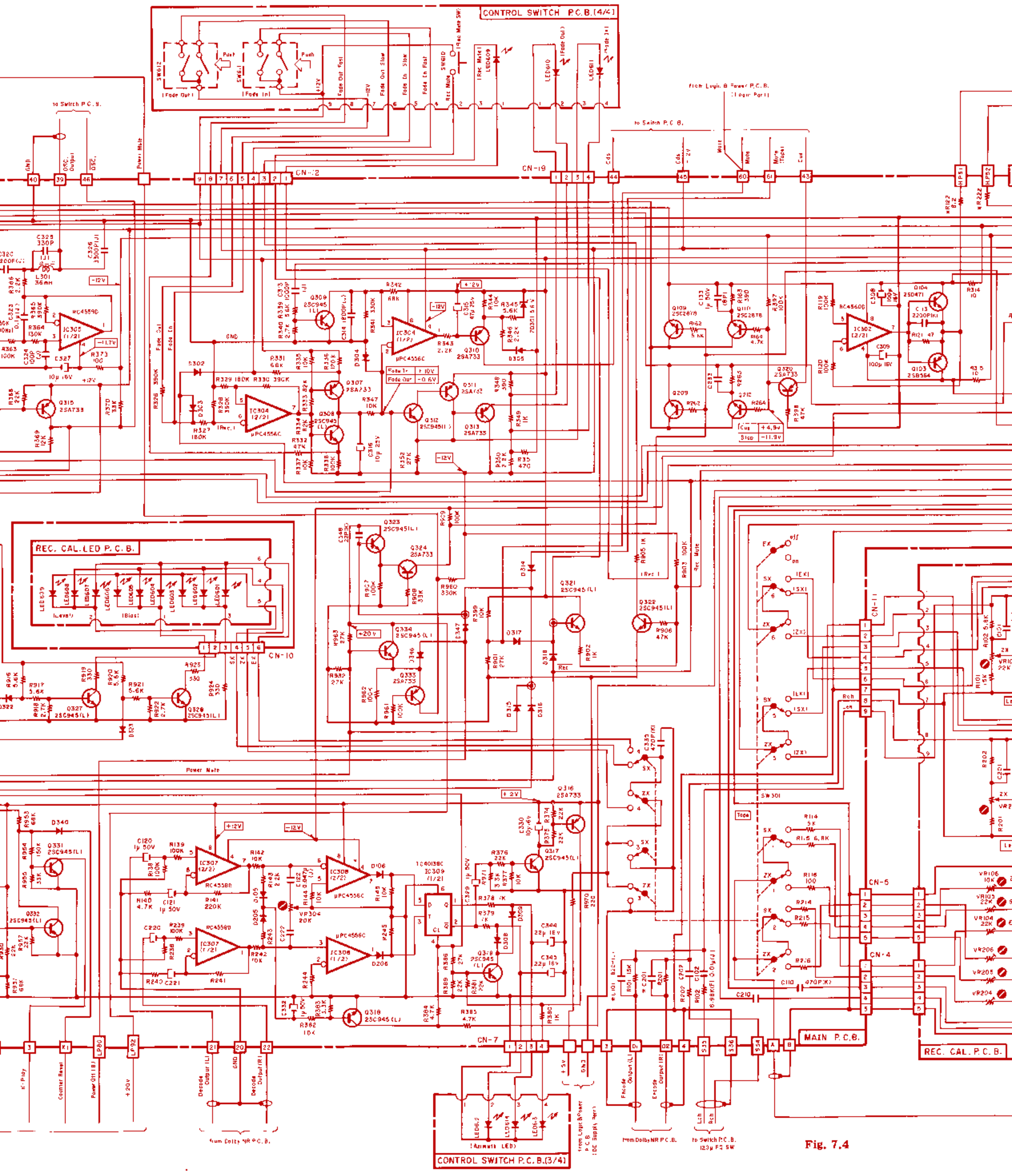
CONTROL SWITCH P.C.B.(4/4)
REC. CAL. LED P.C.B.
MAIN P.C.B.
REC. CAL. P.C.B.
CONTROL SWITCH P.C.B.(3/4)
CN-2
CN-19
CN-10
CN-11
CN-5
CN-4
CN-7
to Switch P.C.B.
from Logic & Power P.C.B.
from Dolby NR P.C.B.
to Switch P.C.B.
Power Mute
Rec Mute
Fade Out
Fade In
Fade Out Fast
Fade Out Slow
Fade In Slow
Fade In Fast
Rec Mute SW
Rec Mute
Mute
Mute (Tape)
Cut
Cds
Rch
Lch
Tape
Rec
Play
Counter Reset
Power Off (B)
+20V
Decode Output (L)
Decode Output (R)
Encode Output (L)
Encode Output (R)
GND
+5V
(Azimuth LED)
IC304 (1/2)
IC305 (1/2)
IC306 (1/2)
IC307 (1/2)
IC308 (1/2)
IC309 (1/2)
IC302 (2/2)
RC4559D
RC4560D
μPC4556C
Q309 2SC945 (L)
Q310 2SA733
Q311 2SA733
Q312 2SC945 (L)
Q313 2SA733
Q315 2SA733
Q316 2SA733
Q317 2SC945 (L)
Q318 2SC945 (L)
Q319 2SC945 (L)
Q320 2SA733
Q321 2SC945 (L)
Q322 2SC945 (L)
Q323 2SC945 (L)
Q324 2SA733
Q327 2SC945 (L)
Q328 2SC945 (L)
Q331 2SC945 (L)
Q332 2SC945 (L)
Q333 2SA733
Q334 2SC945 (L)
Q104 2SD471
Q103 2SB364
Q320 2SA733
Q209 2SC2878
Q210 2SC2878
Q315 2SA733
Q316 2SA733
Q317 2SC945 (L)
Q318 2SC945 (L)
Q319 2SC945 (L)
Q321 2SC945 (L)
Q322 2SC945 (L)
Q323 2SC945 (L)
Q324 2SA733
Q327 2SC945 (L)
Q328 2SC945 (L)
Q331 2SC945 (L)
Q332 2SC945 (L)
Q333 2SA733
Q334 2SC945 (L)
Q309 2SC945 (L)
Q310 2SA733
Q311 2SA733
Q312 2SC945 (L)
Q313 2SA733
Q315 2SA733
Q316 2SA733
Q317 2SC945 (L)
Q318 2SC945 (L)
Q319 2SC945 (L)
Q320 2SA733
Q321 2SC945 (L)
Q322 2SC945 (L)
Q323 2SC945 (L)
Q324 2SA733
Q327 2SC945 (L)
Q328 2SC945 (L)
Q331 2SC945 (L)
Q332 2SC945 (L)
Q333 2SA733
Q334 2SC945 (L)
Fade In
Fade Out
+12V
-12V
+20V
+2V
-11.7V
SW301
Tape
Rch
Lch

Fig. 7.4

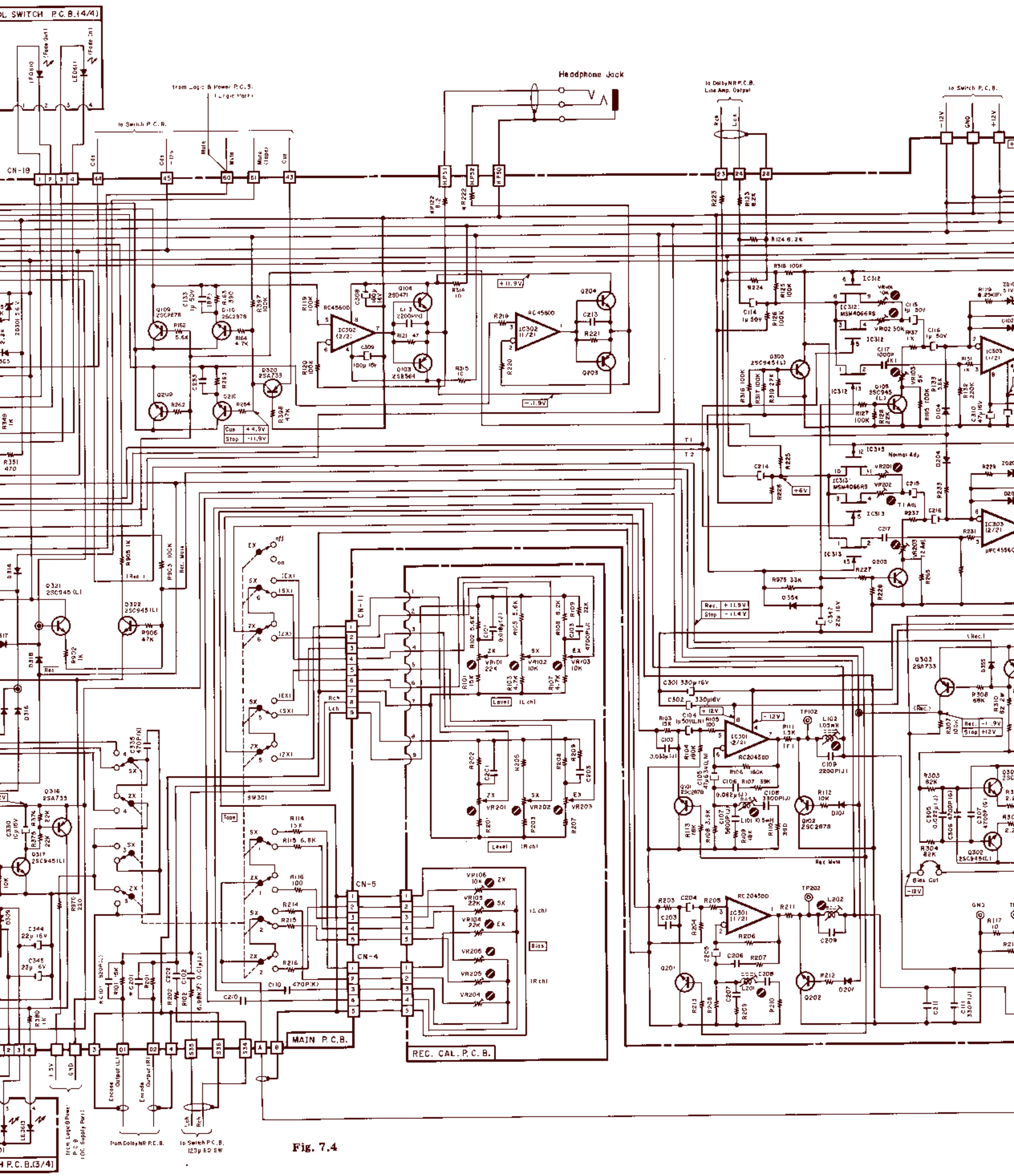
Headphone Jack
MAIN P.C.B.
REC. CAL. P.C.B.
CN-19
CN-11
CN-5
CN-4
IC302 (2/2)
IC302 (1/2)
IC301 (2/2)
IC301 (1/2)
IC303 (1/2)
IC312
IC313
Level (L ch)
Level (R ch)
Bias
Tape
Rec
Stop
Cue
Mute
Rec. Mute
Bias Cut
Rec. Mute
Normal Adj.
T1 Adj.
T2 Adj.
Rch
Lch
+11.9V
-11.9V
+6V
+12V
-12V
GND
Cue 4.4.9V
Stop -11.9V
Rec. +11.9V
Stop -11.4V
Rec. -1.9V
Stop +12V
Rch
Lch
Encode Output (L)
Encode Output (R)
Lch
Rch
From Dolby NR P.C.B.
To Switch P.C.B. (23μ ED SW)
From Logic & Power P.C.B. (DC Supply Part)
To Switch P.C.B.
To Dolby NR P.C.B. Line Amp. Output
From Logic & Power P.C.B. (Logic Part)
SWITCH P.C.B.(4/4)
P.C.B.(3/4)

Fig. 7.4

Notes: 1. Diode is 1SS53, 1S953, or 1S1555 unless otherwise specified.
2. Resistor and capacitor marked with * show typical value.

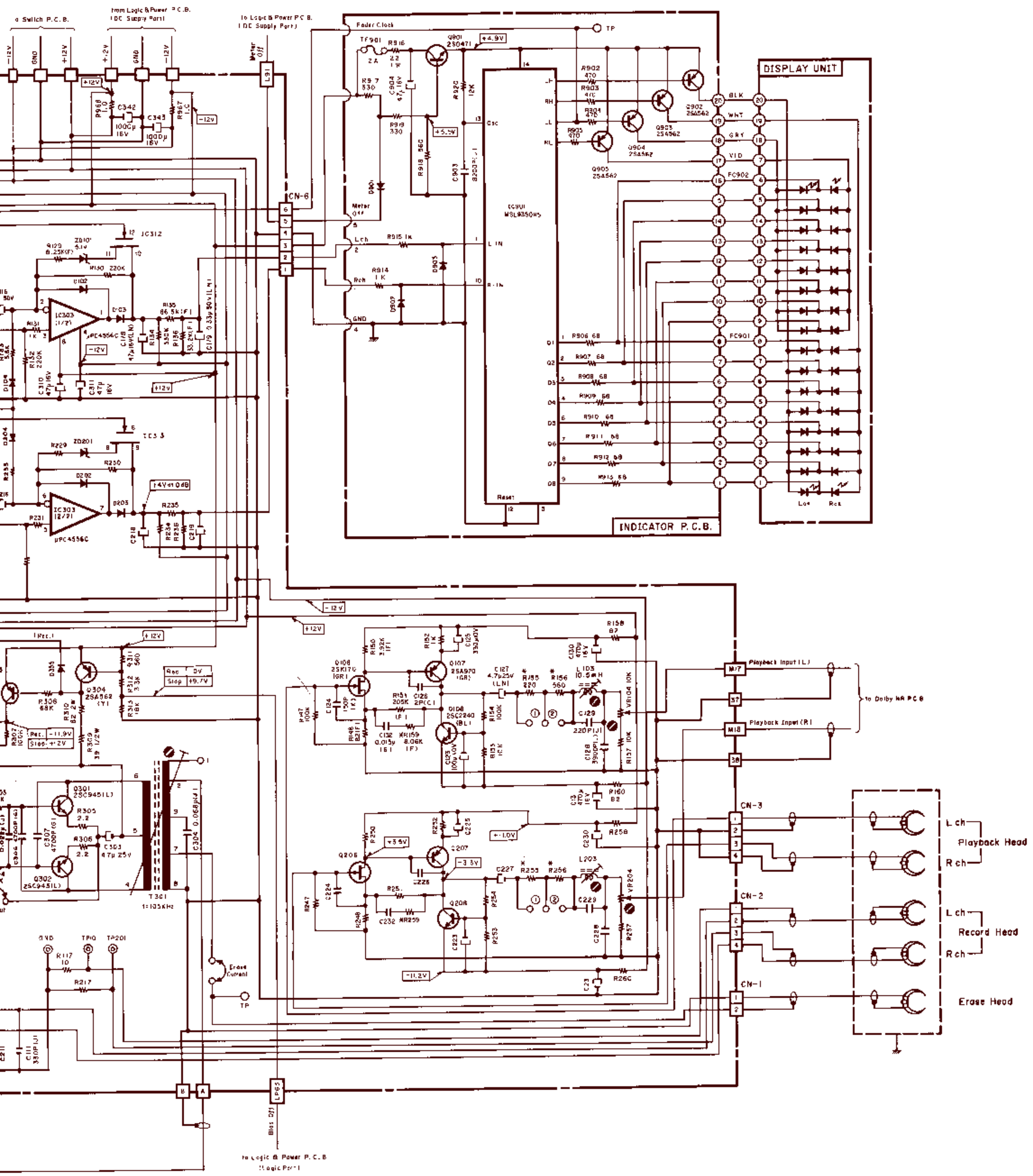

7.5. Dolby NR Section

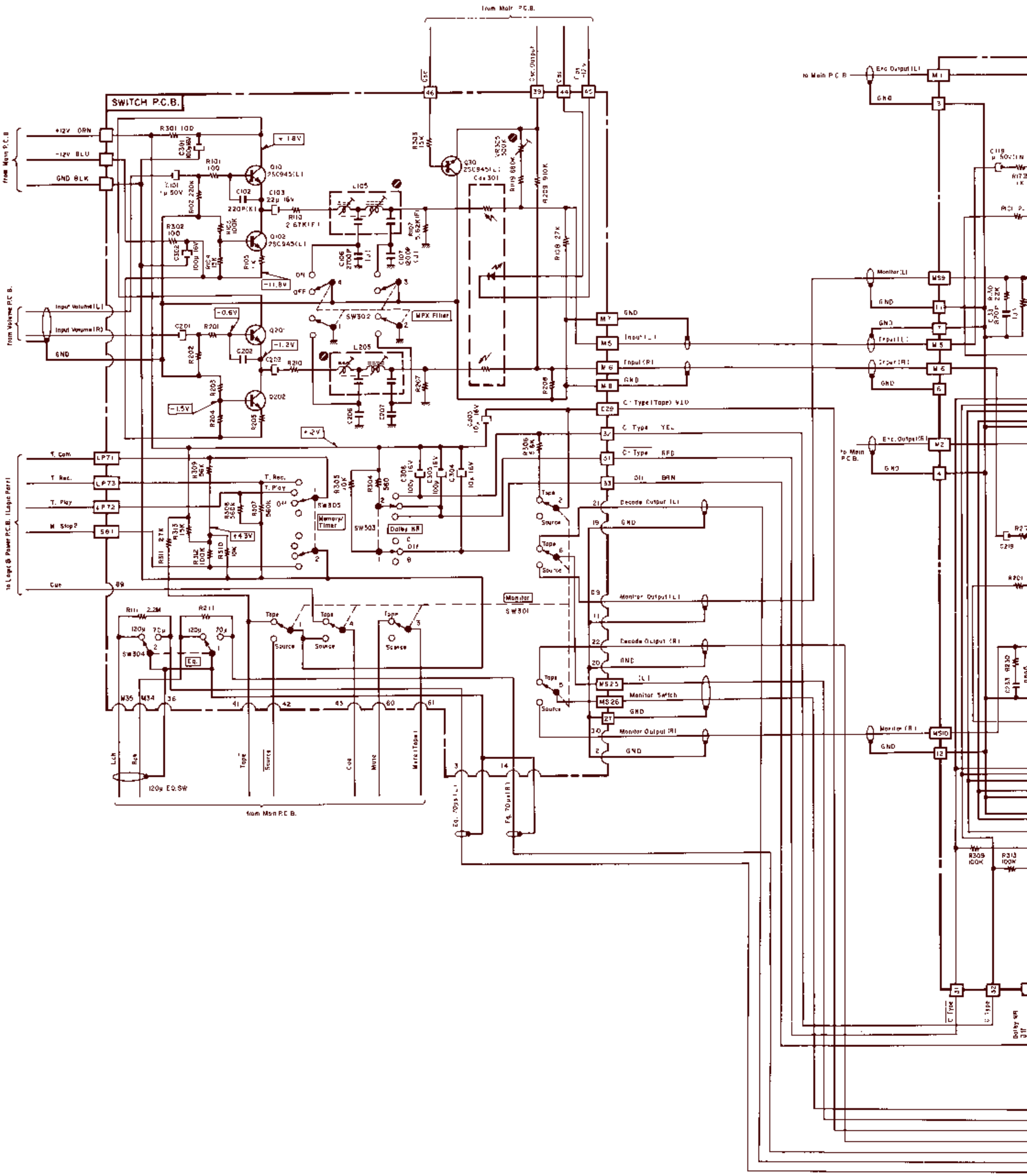

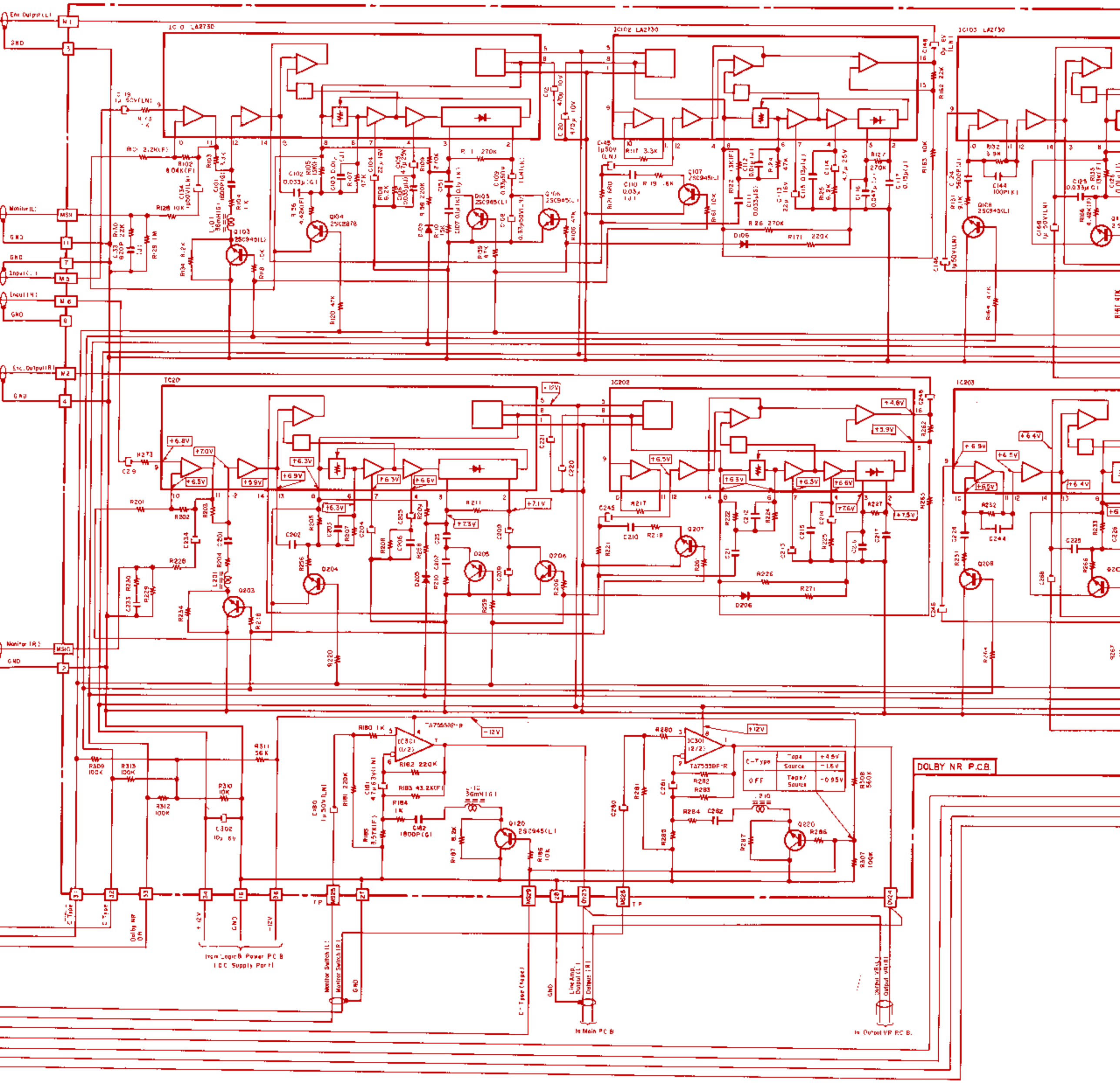
DOLBY NR P.C.B.
C-Type
Tape
Source
OFF
Tape/Source
Dolby NR ON
Main Logic & Power P.C.B. (DC Supply Part)
Monitor Switch (L)
Monitor Switch (R)
GND
C-Type (Tape)
Line Amp. Output (L)
Output (R)
to Main P.C.B.
Output VR (L)
Output VR (R)
to Output VR P.C.B.

Fig. 7.5

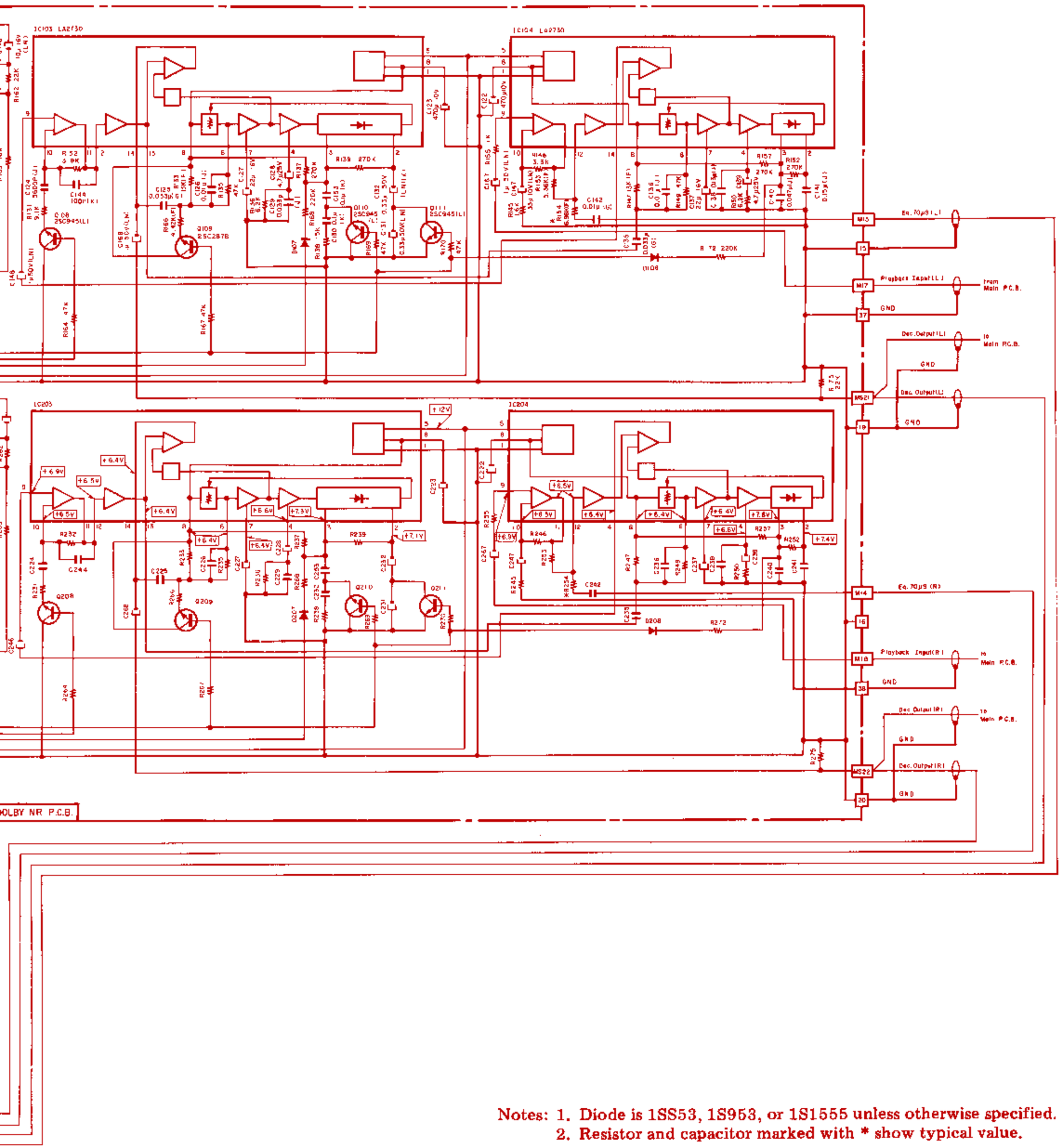

Notes: 1. Diode is 1SS53, 1S953, or 1S1555 unless otherwise specified.
2. Resistor and capacitor marked with * show typical value.

8. WIRING DIAGRAM

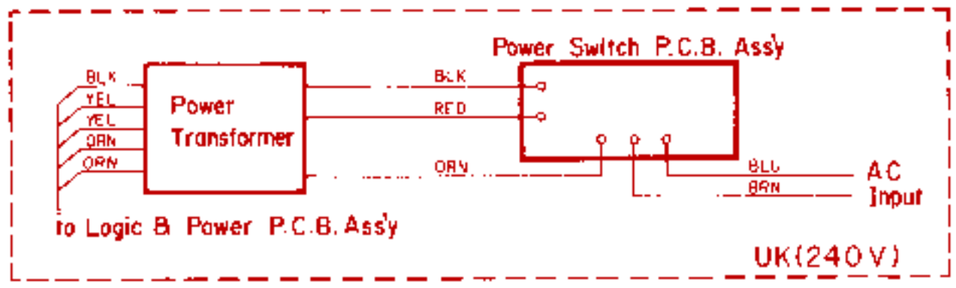

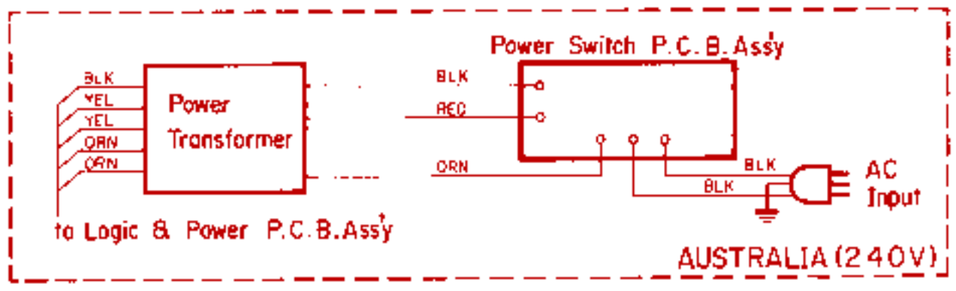

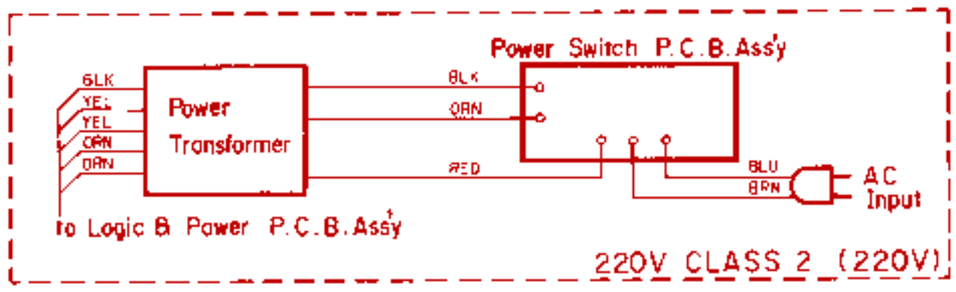

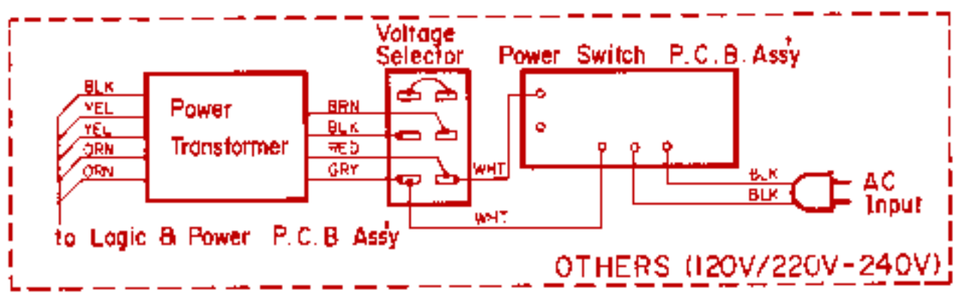

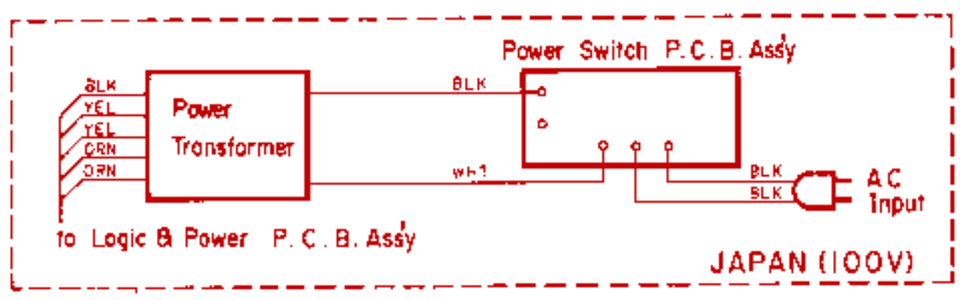

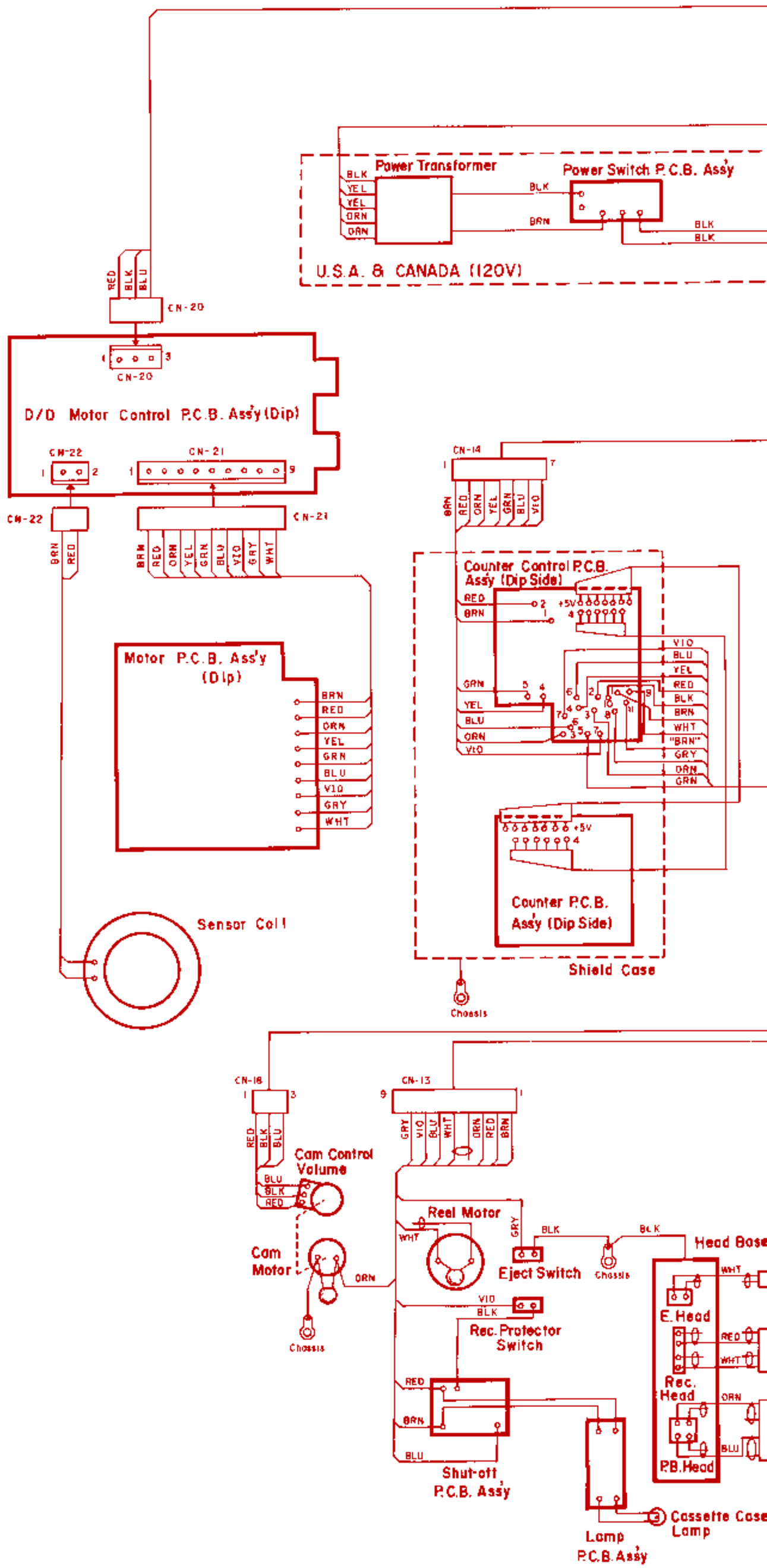

Notes: 1. Table of wire colors

- BLK — Black
- BLU — Blue
- ORN — Orange
- GRY — Gray
- GRN — Green
- RED — Red
- BRN — Brown
- YEL — Yellow
- WHT — White
- VIO — Violet

2. Component side view of the P.C.B. is illustrated unless otherwise specified.
3. Wire tube color is shown in ( ).

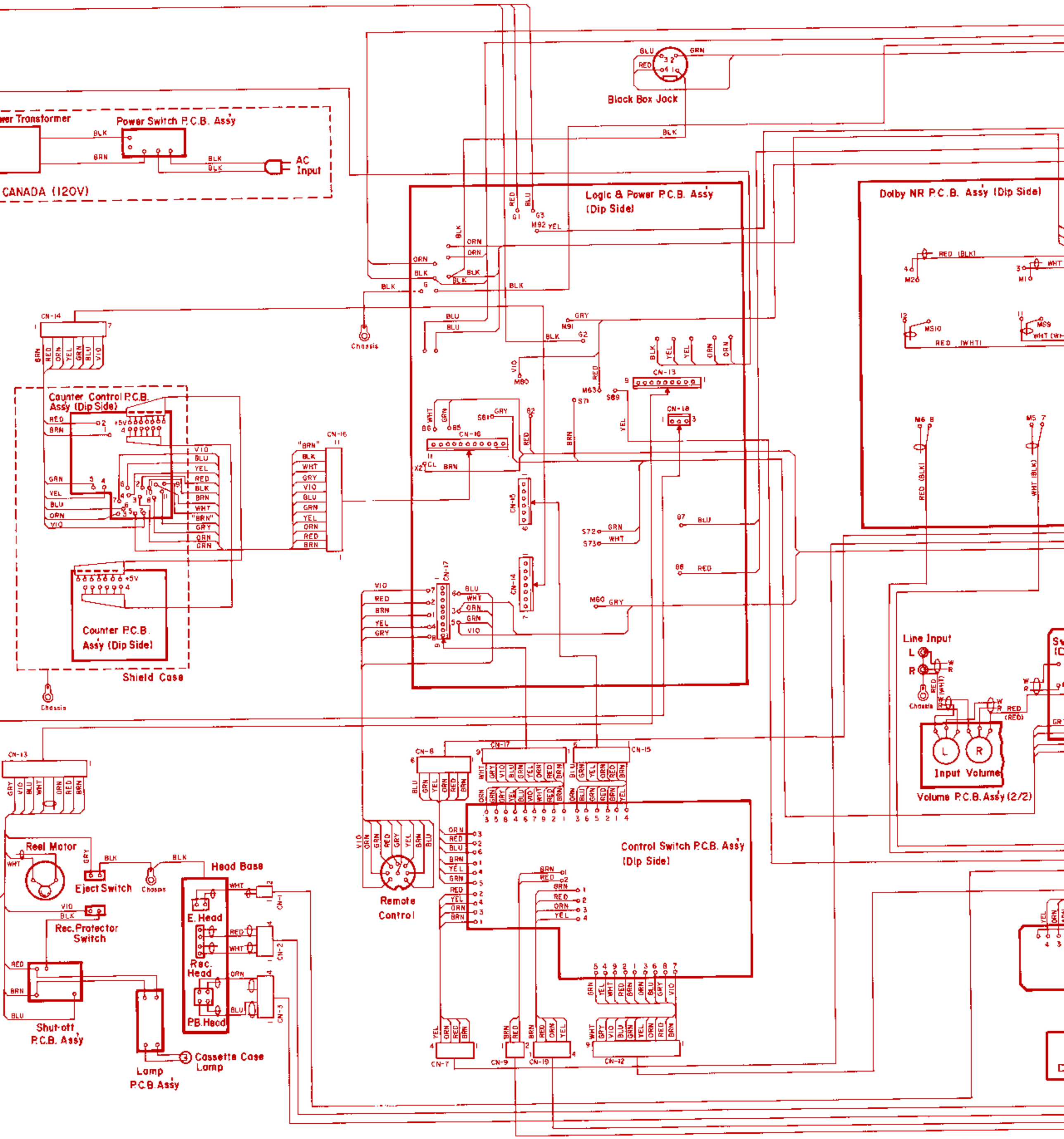
Power Transformer
Power Switch P.C.B. Assy
AC Input
CANADA (120V)
Black Box Jack
Logic & Power P.C.B. Assy (Dip Side)
Dolby NR P.C.B. Assy (Dip Side)
Counter Control P.C.B. Assy (Dip Side)
Counter P.C.B. Assy (Dip Side)
Shield Case
Chassis
Line Input
Input Volume
Volume P.C.B. Assy (2/2)
Reel Motor
Eject Switch
Rec. Protector Switch
Shut-off P.C.B. Assy
Head Base
E. Head
Rec. Head
PB. Head
Lamp P.C.B. Assy
Cassette Case Lamp
Remote Control
Control Switch P.C.B. Assy (Dip Side)

Fig. 8

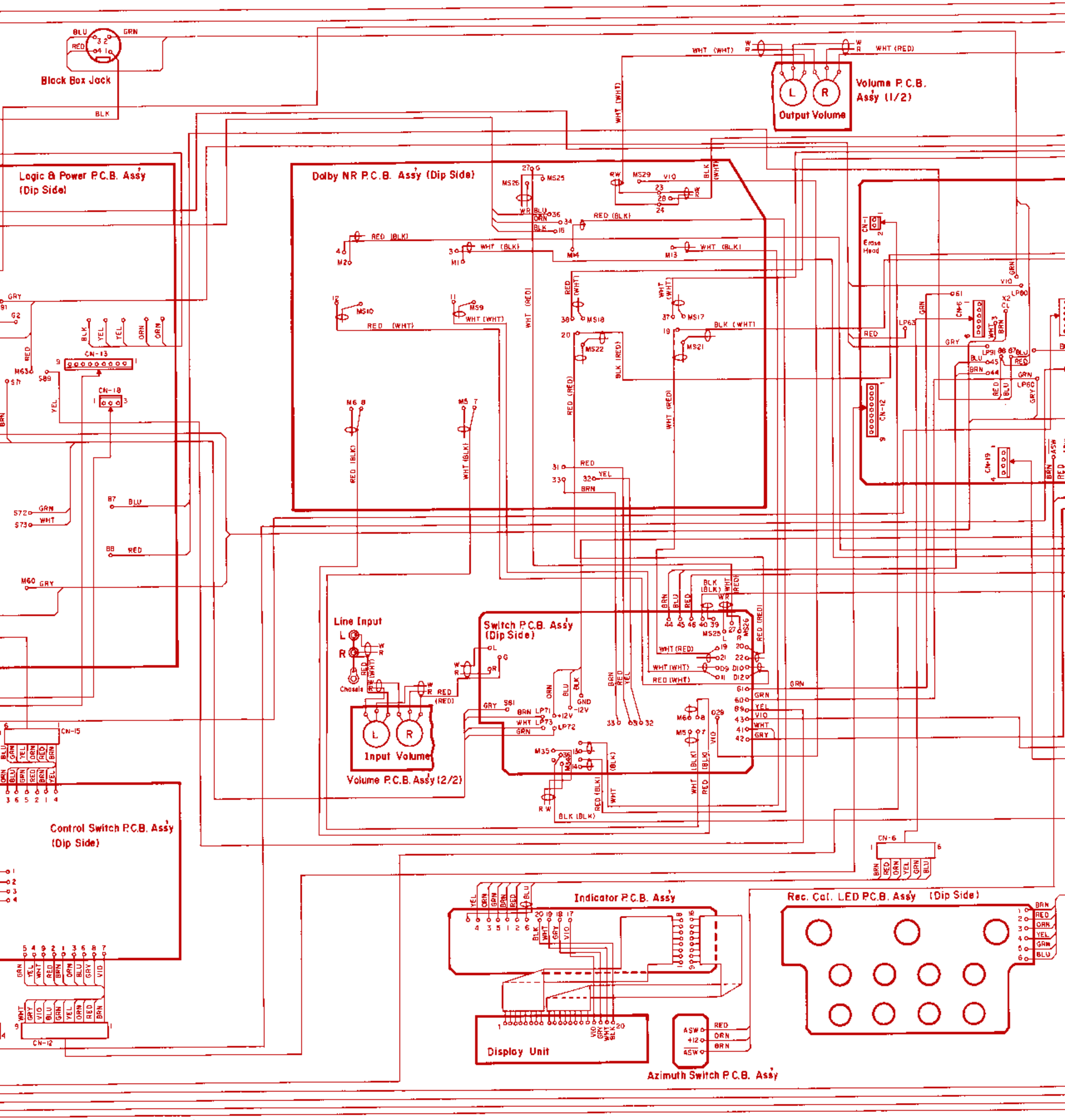
Black Box Jack
Logic & Power P.C.B. Assy (Dip Side)
Dolby NR P.C.B. Assy (Dip Side)
Volume P.C.B. Assy (1/2)
Output Volume
Erase Head
Line Input
Chassis
Input Volume
Volume P.C.B. Assy (2/2)
Switch P.C.B. Assy (Dip Side)
Control Switch P.C.B. Assy (Dip Side)
Indicator P.C.B. Assy
Rec. Cal. LED P.C.B. Assy (Dip Side)
Display Unit
Azimuth Switch P.C.B. Assy

Fig. 8

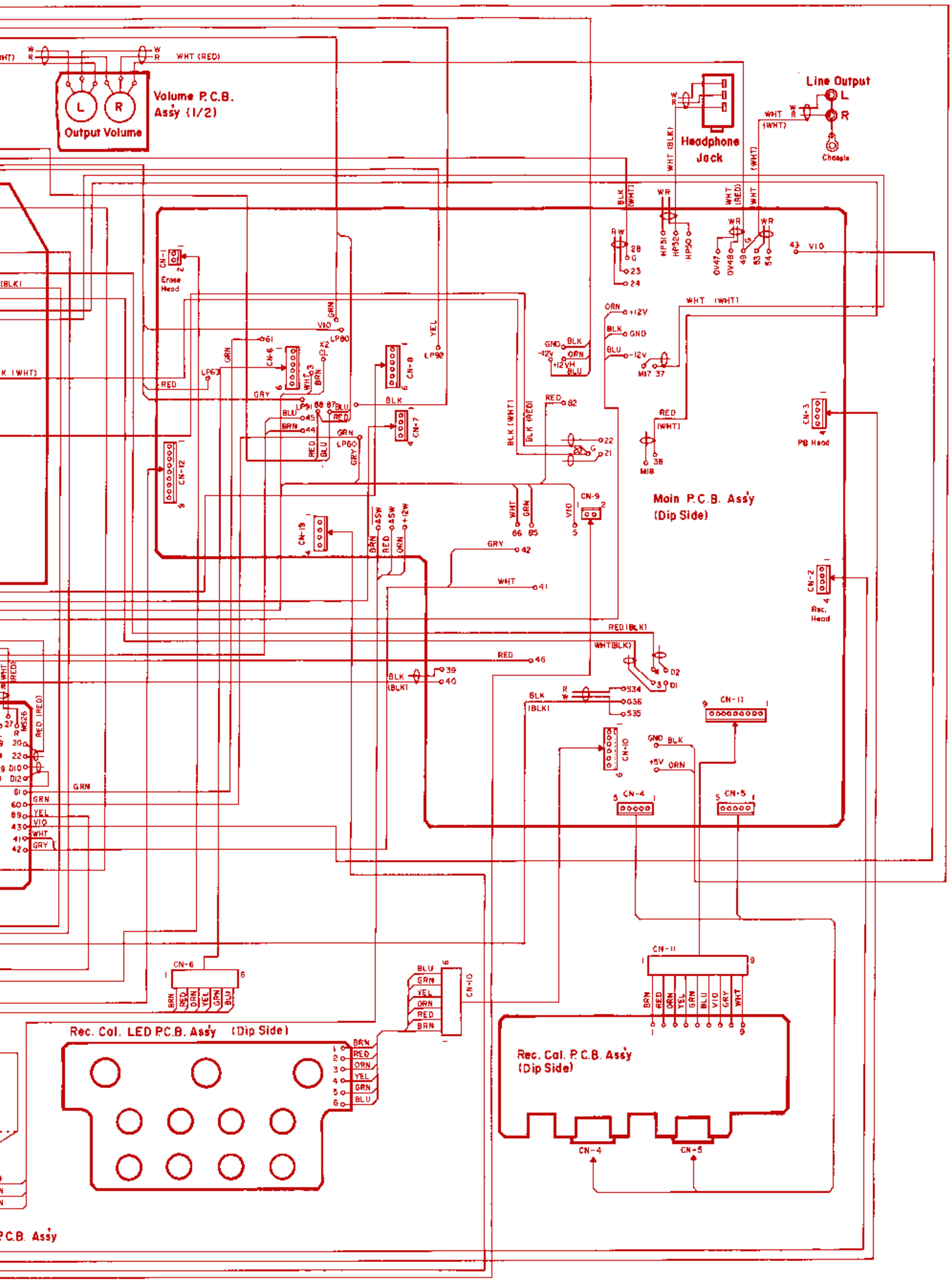
Volume P.C.B. Assy (1/2)
Output Volume
Headphone Jack
Line Output
Chassis
Erase Head
Main P.C.B. Assy (Dip Side)
PB Head
Rec. Head
Rec. Col. LED P.C.B. Assy (Dip Side)
Rec. Col. P.C.B. Assy (Dip Side)
CN-1
CN-2
CN-3
CN-4
CN-5
CN-6
CN-7
CN-8
CN-9
CN-10
CN-11
CN-12
CN-19