NIKKO

Stereo receiver 8085

Service manual

www.hifiengine.com

CONTENTS

1. SPECIFICATION 1-2
2. EXTERNAL VIEW 3
3. INTERNAL VIEW 4
4. PARTIAL DISASSEMBLY 4-6
5. DIAL MECHANISM 6
6. MEASUREMENT AND ADJUSTMENT 7-8-9
7. PRINTED CIRCUIT BOARD
   - TUNER PCB ASSEMBLY 10
   - MAIN AMP ASSEMBLY 11
   - MAIN AMP PCB ASSEMBLY 12
   - PRE AMP PCB ASSEMBLY 13
8. BLOCK DIAGRAM 14
9. OVERALL DIAGRAM 15
10. PARTIAL CHANGES MADE
    - ACCORDING DESTINATION 16-17
11. PARTS LIST 18-19-20-21-22
12. SEMICONDUCTOR SPECIFICATION
    - TRANSISTOR COMPLEMENT 23
    - FIELD EFFECT TRANSISTOR COMPLEMENT 23
    - RECTIFIER, DIODE, ZENER-DIODE COMPLEMENT 23
    - INTEGRATED CIRCUITS COMPLEMENT 24-25-26-27

www.hifiengine.com

SPECIFICATION

		NOMINAL	LIMIT
Sensitivity	(IHF)	1.9μV	2.8μV
Quieting Slope	(S/N 50dB)	3.0μV	5.0μV
Selectivity	(IHF)	75dB	65dB
Image Rejection	(98MHz)	90dB	75dB
IF Rejection	(98MHz)	100dB	90dB
Signal to Noise ratio		70dB	60dB
Capture Ratio	(IHF)	1.0dB	3.0dB
Muting Sensitivity		5.0dB	±6.0dB
Distortion	(MONO)	0.2%	0.5%
Distortion	(STEREO 1KHz)	0.4%	0.7%
Stereo Separation	(1KHz)	45dB	35dB
Output voltage	(TAPE OUT)	750mV	±2dB

2. AM TUNER SECTION

Sensitivity	(IHF)	300μV/m	1000μV/m
Selectivity	(IHF) ±10KHz	35dB	30dB
Image Rejection	(1000KHz)	45dB	40dB
IF Rejection	(1000KHz)	40dB	35dB
Distortion		1.0%	3.0%
Signal to Noise ratio		45dB	40dB
Output level	(TAPE OUT)	150mV	±2dB

3. AMPLIFIER SECTION

Input sensitivity	PHONO	2.5mV	±2dB
	AUX	180mV	±2dB
	MIC	2.5mV	±2dB
	TAPE MON.	180mV	±2dB
	TAPE MON. (DIN)	180mV	±2dB
	4 CH. IN (MAIN IN)	1300mV	±2dB
Signal to Noise (INPUT SHORT)			
	PHONO	65dB	57dB
	AUX	80dB	75dB
	TAPE MON.	80dB	75dB
	4CH. IN. (MAIN IN)	90dB	85dB
	MIC.	65dB	60dB
Continuous power output			
20Hz ~ 20KHz (8Ω) 2CH Driven		48W x 2	45W x 2
20Hz ~ 20KHz (4Ω) 2CH Driven		53W x 2	49W x 2
1KHz 2CH Driven (8Ω)		50W x 2	46W x 2
1KHz 2CH Driven (4Ω)		60W x 2	50W x 2
Power Bandwidth			
2CH Driven (8Ω) IHF Dist. 0.5%		10Hz ~ 30KHz	20Hz ~ 20KHz

www.hifiengine.com

Frequency response				
PHONO (RIAA EQUALIZATION)		30Hz ~ 15KHz		±1dB
TAPE MON.		20Hz ~ 25KHz		±2dB
OTHERS (TONE DEFEAT)		15Hz ~ 25KHz		±1dB
Output level				
TAPE OUT		170mV		±2dB
TAPE OUT (DIN.)		35mV		±2dB
2CH OUT (PRE. OUT)		1300mV		±2dB
Tone control				
BASS 70Hz	CUT	–11dB		±2dB
	BOOST	+11dB		±2dB
TREBLE 10KHz	CUT	–9dB		±2dB
	BOOST	+9dB		±2dB
Loudness Control				
(VOLUME: –30dB)	70Hz	+10dB		±2dB
	10KHz	+4dB		±2dB
Low Filter	70Hz	–8dB		±2dB
High Filter	10KHz	–7dB		±2dB
Idling Current		30mV		±5mA
Mid-Point Voltage		0mV		±30mV
Residual Hum & Noise (8Ω)		0.6mV		1.5mV
Muting Delay		3 sec.		±1.5 sec.

www.hifiengine.com

EXTERNAL VIEW

FRONT PANEL

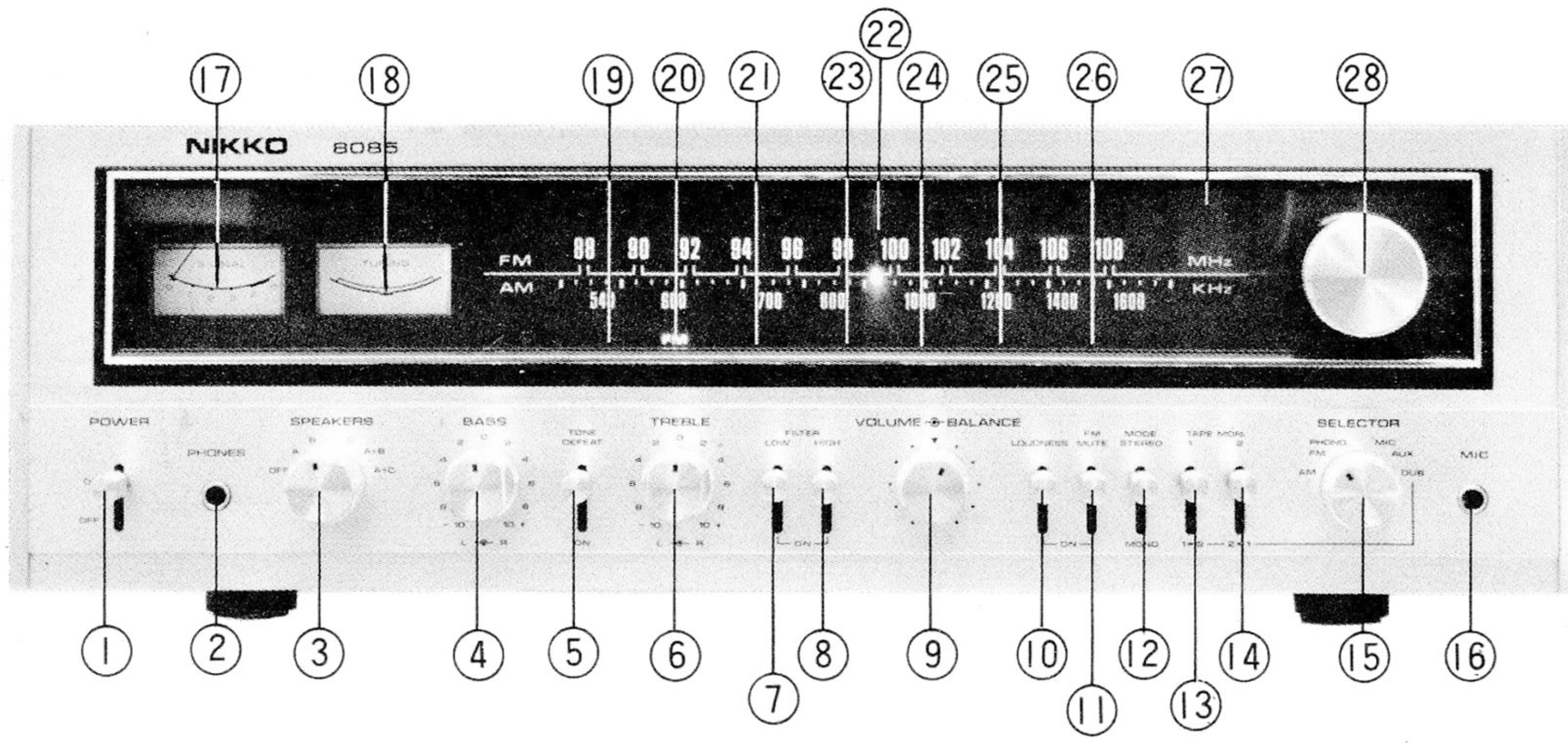

1 POWER SWITCH
2 HEAD-PHONE JACK
3 SPEAKERS SWITCH
4 BASS CONTROL
5 TONE DEFEAT SWITCH
6 TREBLE CONTROL
7 LOW FILTER SWITCH
8 HIGH FILTER SWITCH
9 VOLUME/BALANCE CONTROL
10 LOUDNESS SWITCH
11 FM MUTING SWITCH
12 MODE SWITCH
13 TAPE MONITOR SWITCH #1
14 TAPE MONITOR SWITCH #2
15 SELECTOR SWITCH
16 MIC JACK
17 SIGNAL METER
18 TUNING METER
19 AM INDICATOR
20 FM INDICATOR
21 PHONO INDICATOR
22 DIAL POINTER
23 MIC INDICATOR
24 AUX INDICATOR
25 TAPE INDICATOR
26 DUBBING INDICATOR
27 STEREO INDICATOR
28 TUNING KNOB

REAR PANEL

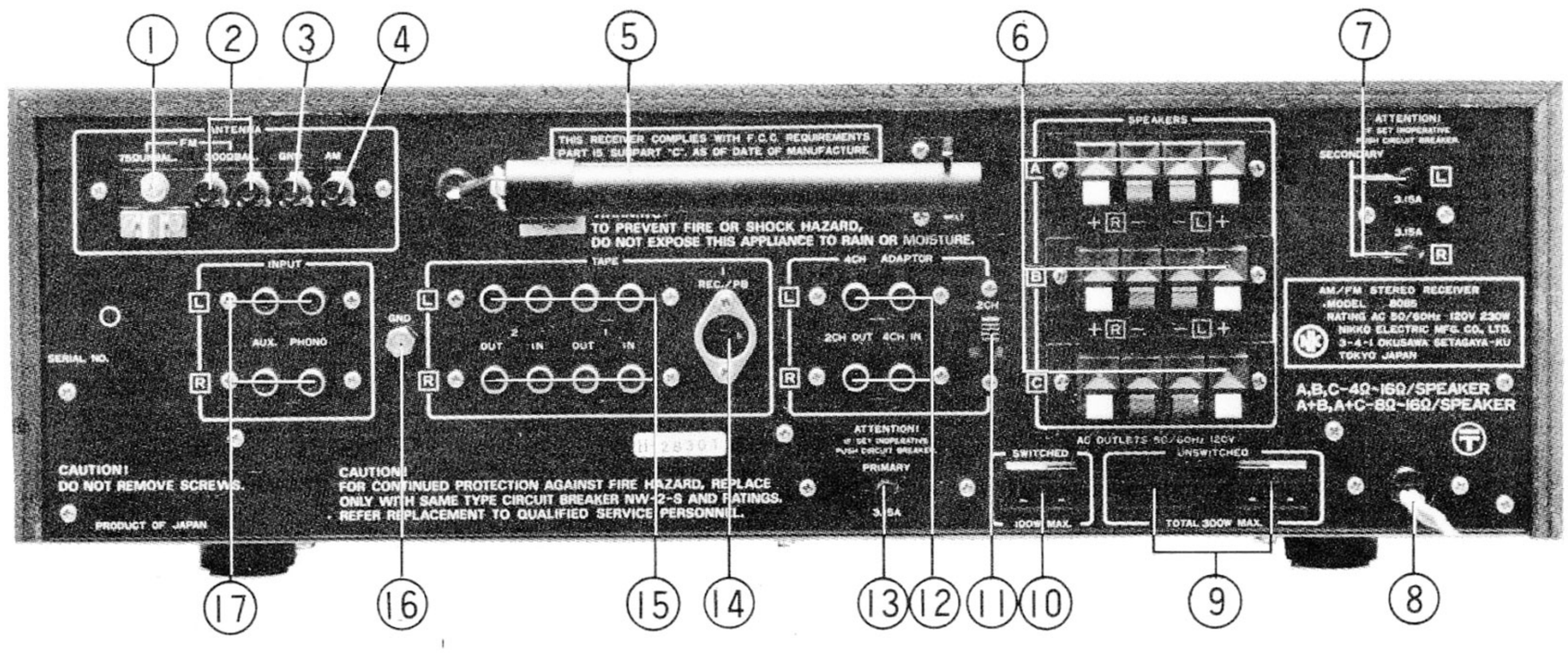

1 FM ANTENNA TERMINAL (75Ω UNBALANCED)
2 FM ANTENNA TERMINALS (300Ω BALANCED)
3 GND TERMINAL
4 AM ANTENNA TERMINAL
5 AM BAR ANTENNA
6 SPEAKER TERMINALS
7 SECONDARY NO FUSE BREAKERS
8 AC CORD
9 AC OUTLETS (UNSWITCHED)
10 AC OUTLET (SWITCHED)
11 2CH / 4CH SWITCH
12 4CH ADAPTER TERMINALS
13 PRIMARY NO FUSE BREAKER
14 TAPE REC/PB DIN SOCKET
15 TAPE IN/OUT TERMINALS
16 PHONO GND TERMINAL
17 INPUT TERMINALS

www.hifiengine.com

INTERNAL VIEW

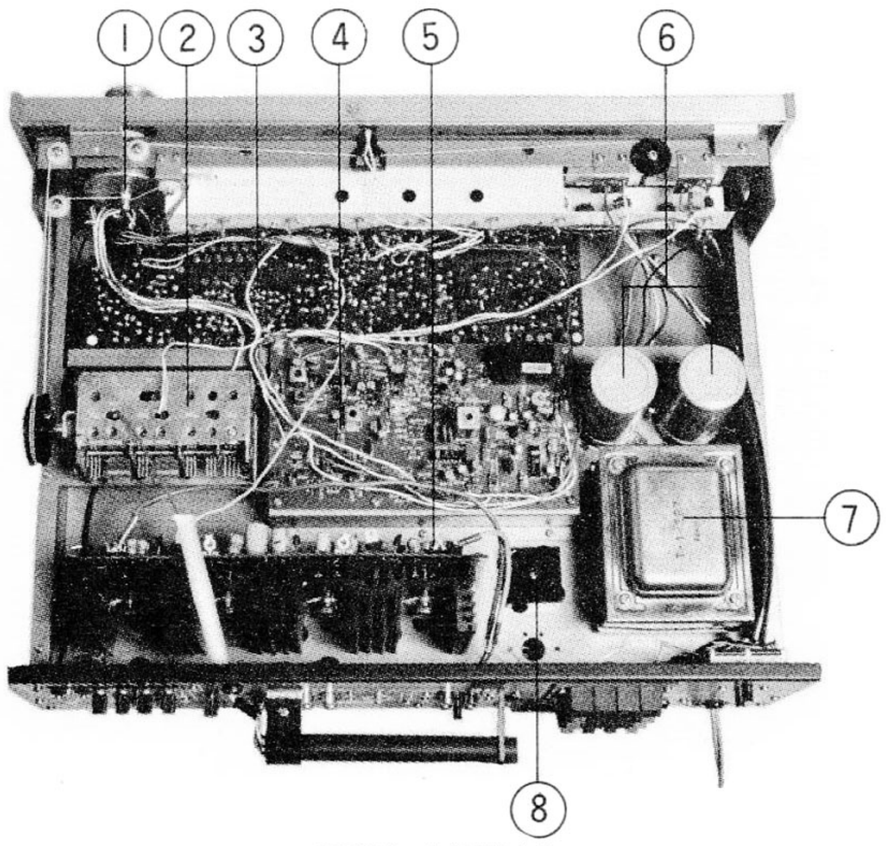

TOP VIEW

1	FLYWHEEL	
2	FRONT END	Parts No. 4910020
3	PRE AMP PCB ASSY BOARD	Parts No. 9440770
4	TUNER PCB ASSY BOARD	Parts No. 9492070
5	MAIN AMP PCB ASSY BOARD	Parts No. 9430370
6	E-CAP 50L10000	Parts No. 212545Q
7	POWER TRANSFORMER T-1-227	Parts No. 1102270
8	DIODE	Parts No. 560034S

PARTIAL DISASSEMBLY

CABINET REMOVAL

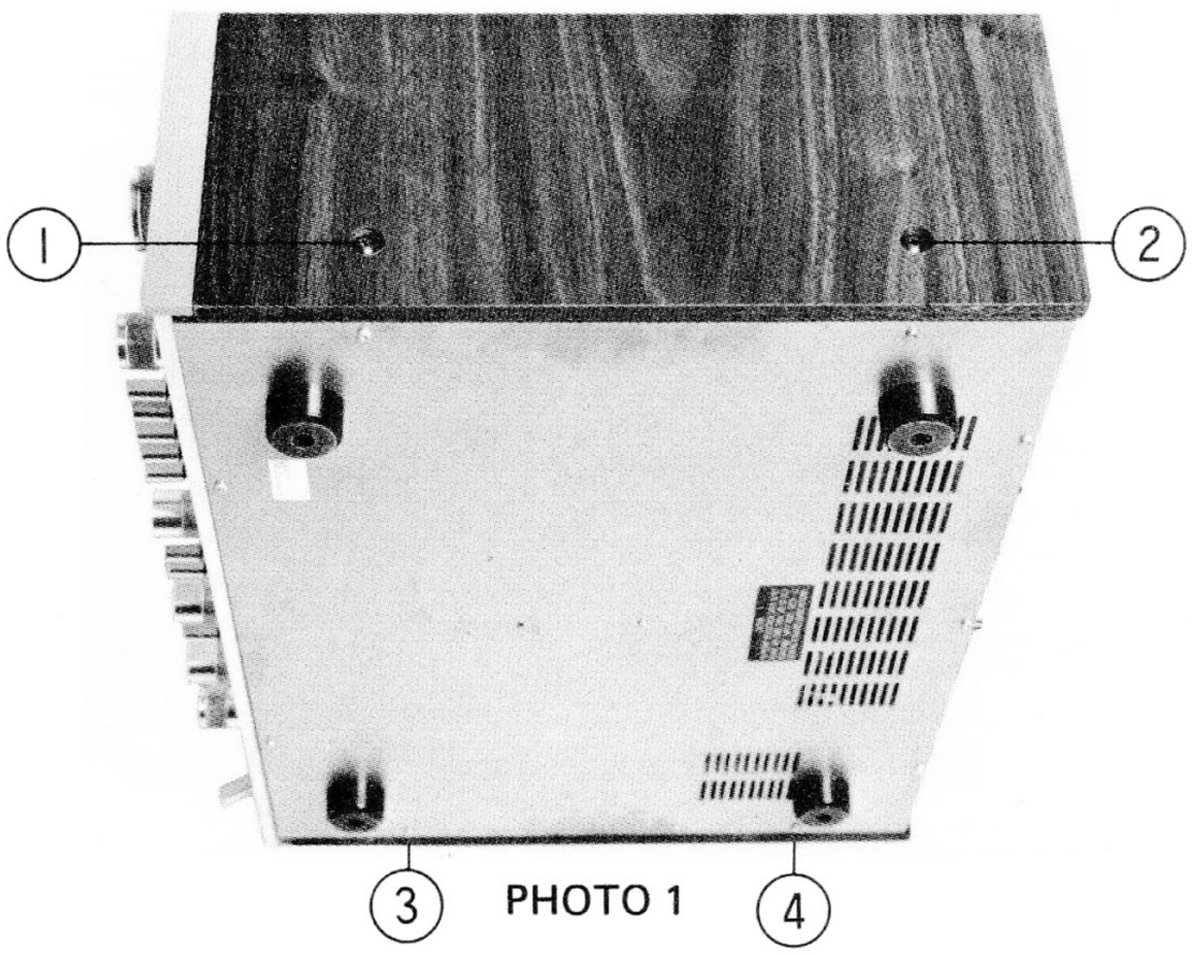

PHOTO 1

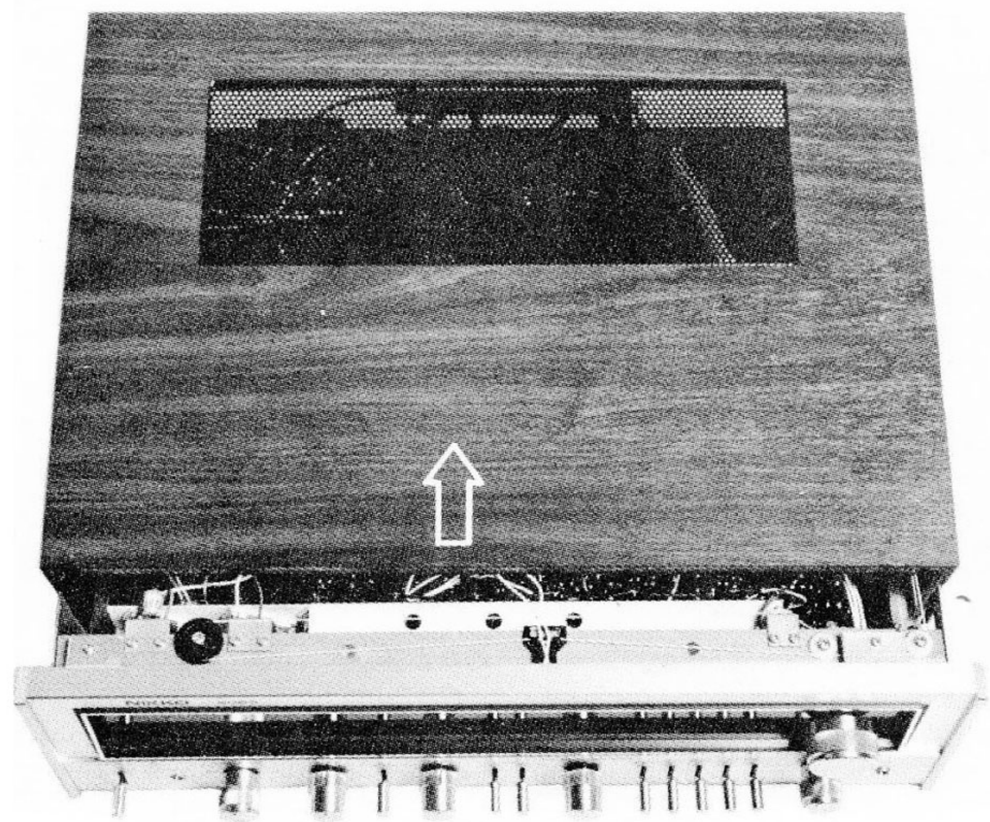

PHOTO 2

a. Stand the cabinet up and remove screws (1 ~ 4) as shown in Photo 1.

b. Return the cabinet to its original position and pull forward and then lift up to remove it. (Photo 2)

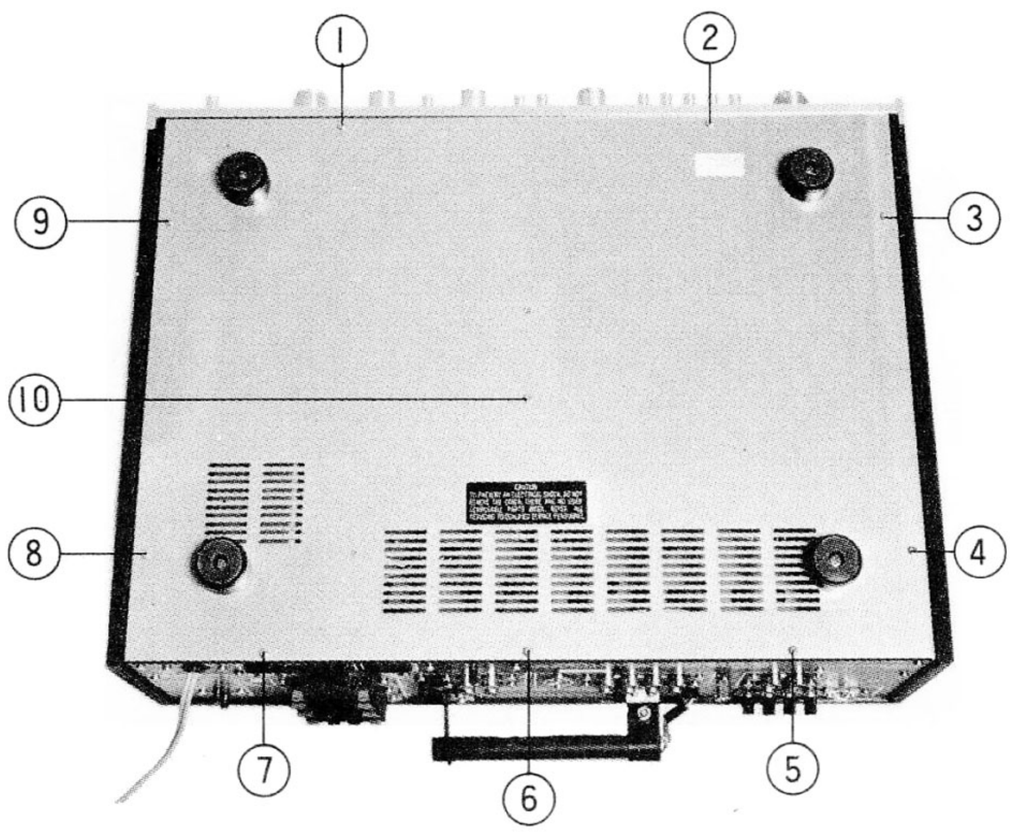

BOTTOM PLATE REMOVAL

Turn the cabinet and remove screws (1 ~ 10) as shown in Photo 3.

www.hifiengine.com

FRONT PANEL REMOVAL

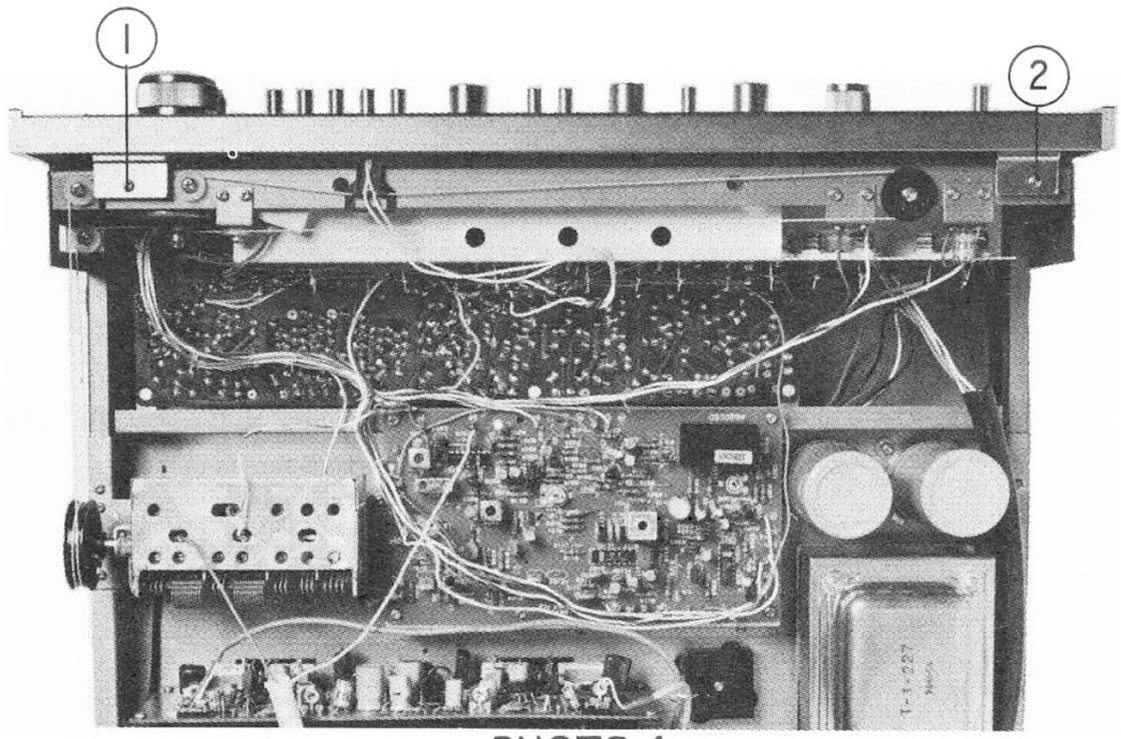

PHOTO 4

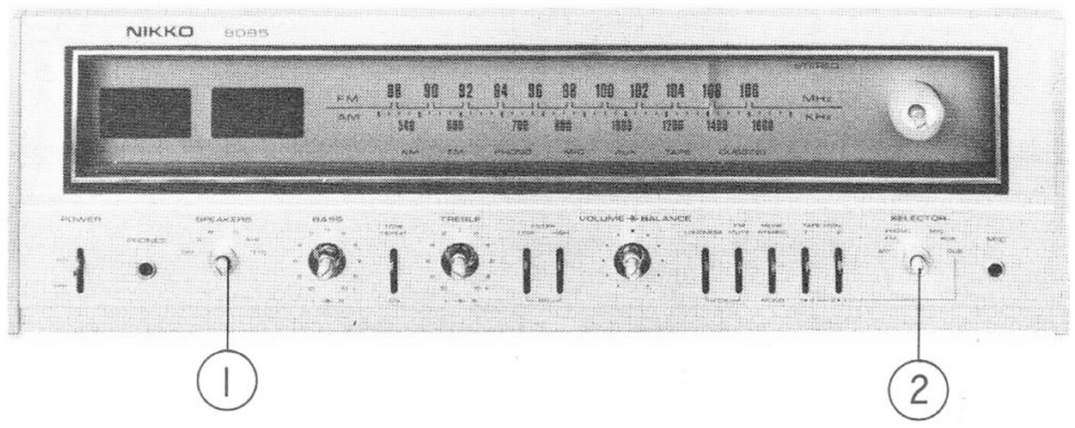

PHOTO 5

Remove screws (1 ~ 2) and nuts (1 ~ 2) as shown in Photo 4 ~ 5.

TUNER PCB ASSY BOARD REMOVAL

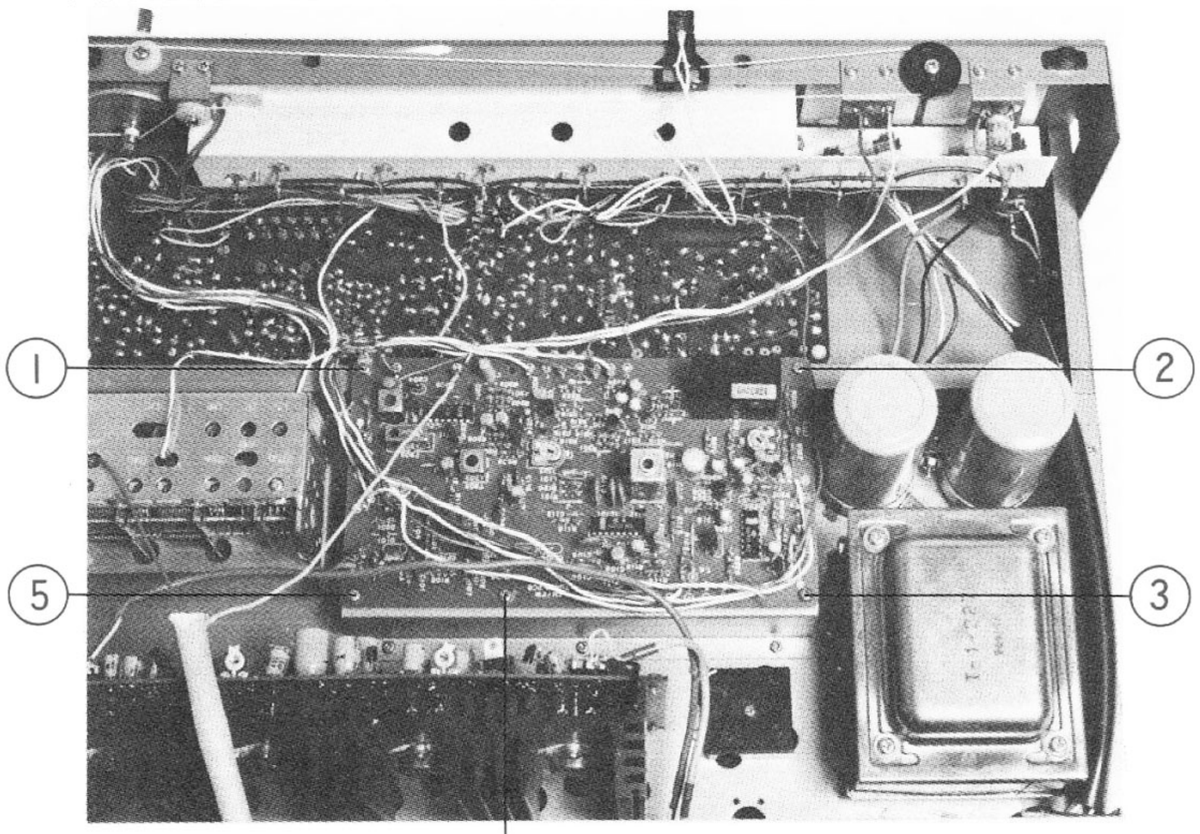

PHOTO 6

Remove screws (1 ~ 5) as shown in Photo 6 then lift the circuit board up to remove it.

PAWER TRANSFORMER REMOVAL

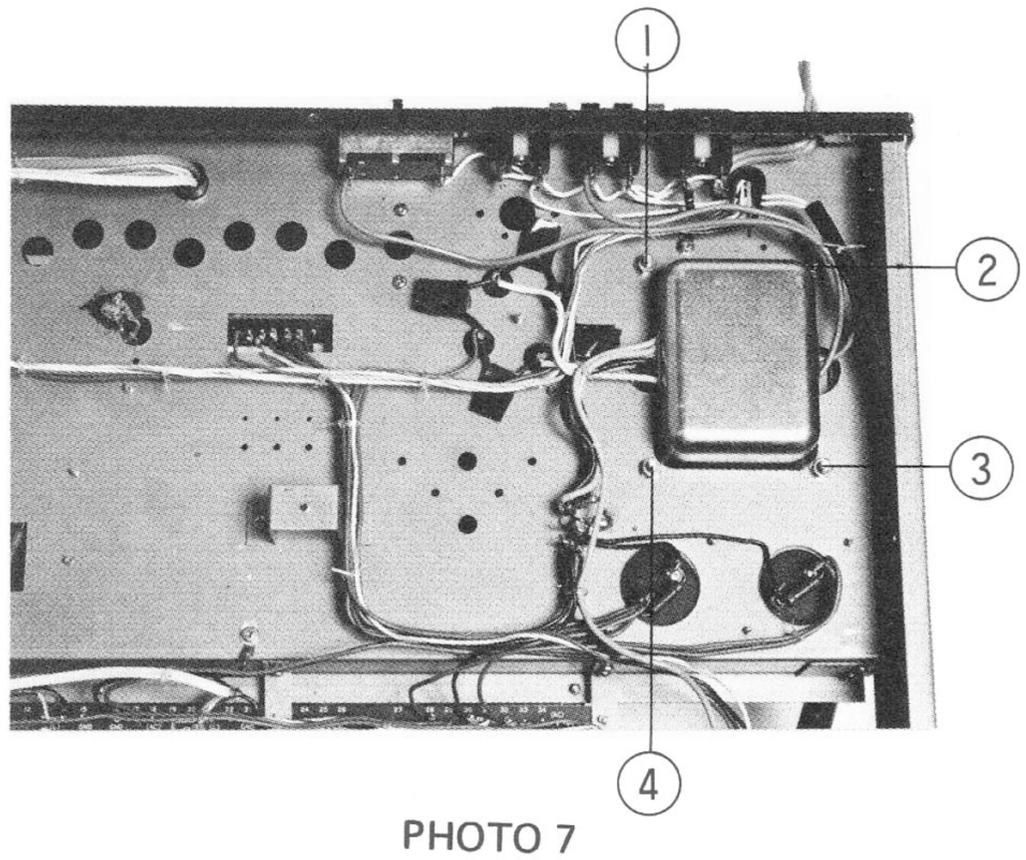

PHOTO 7

Remove nuts (1 ~ 4) as shown in Photo 7 then lift the transformer up to remove it.

PRE AMP PCB ASSY BOARD REMOVAL

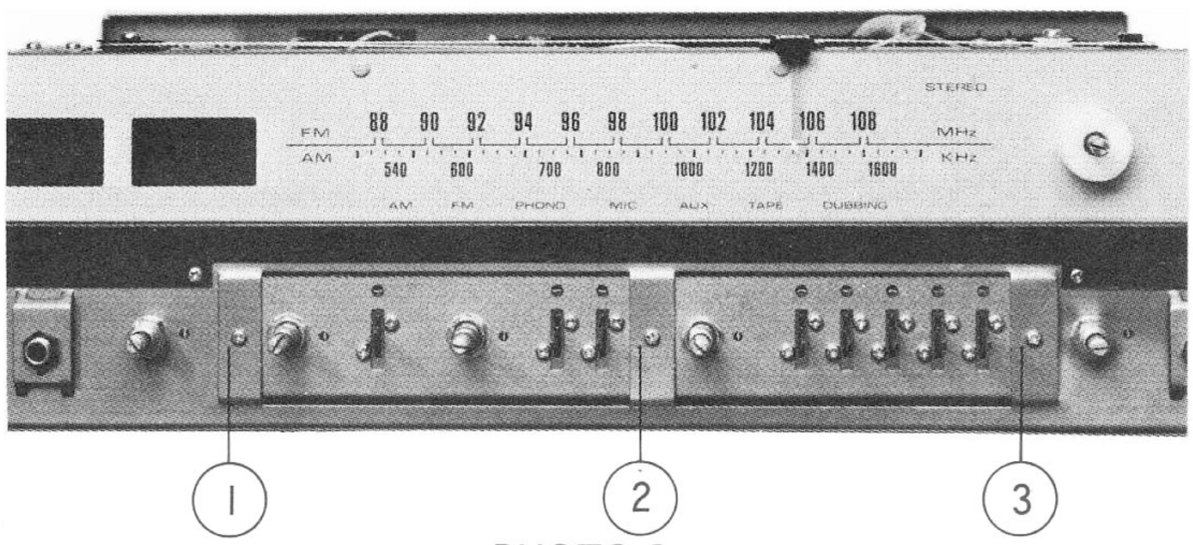

PHOTO 8

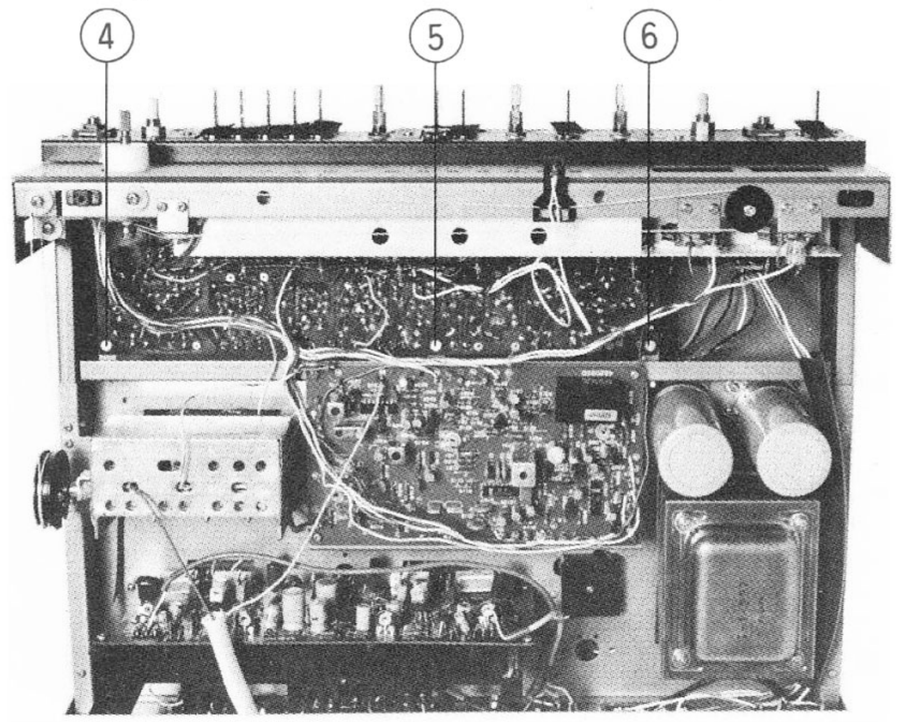

PHOTO 9

Remove screws (1 ~ 3) as shown in Photo 8 and remove rivets (4 ~ 6) as shown in Photo 9.

www.hifiengine.com

FRONT END REMOVAL

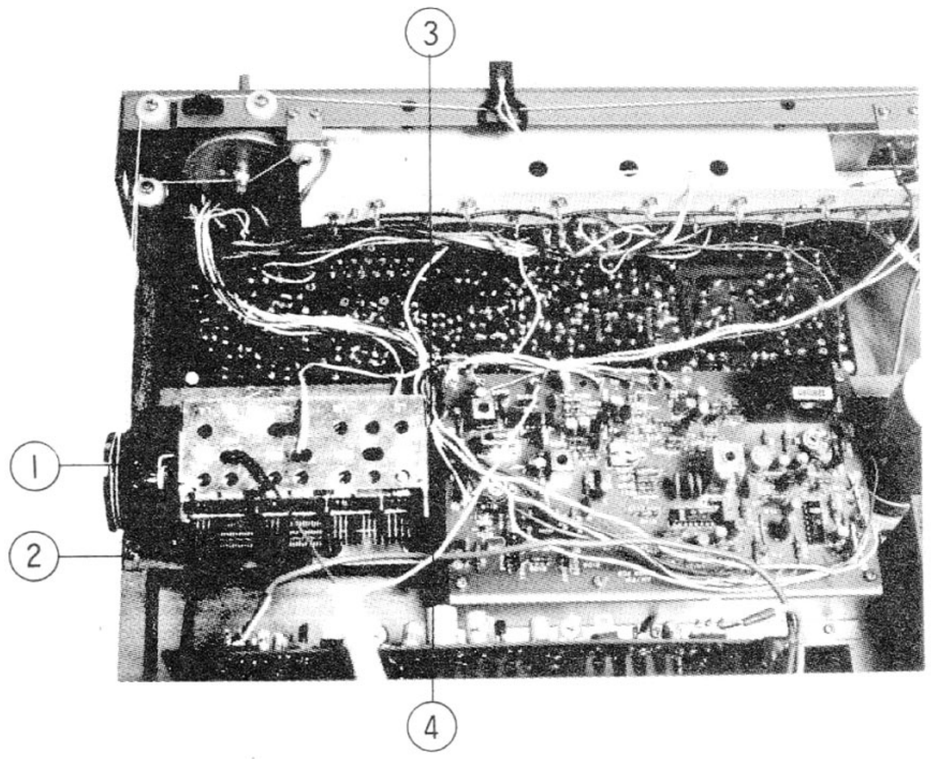

PHOTO 10

Remove the dial drum and remove screws (1 ~ 4) as shown in Photo 10.

MAIN AMP PCB ASSY BOARD REMOVAL

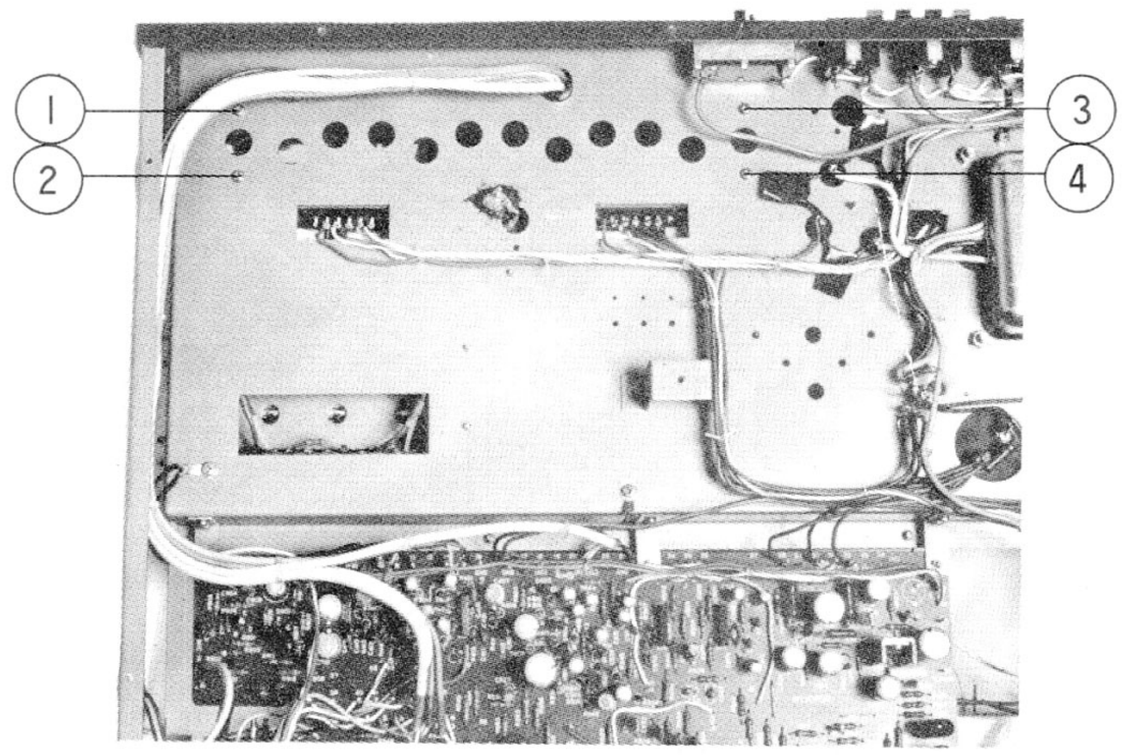

PHOTO 11

Remove screws (1 ~ 4) as shown in Photo 11.

METER REMOVAL

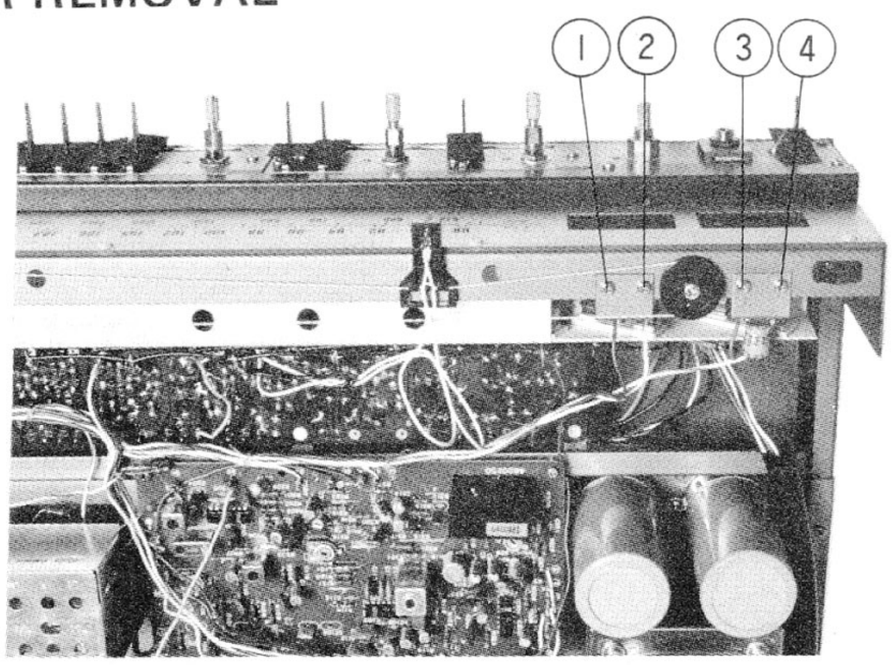

PHOTO 12

Remove screws (1 ~ 4) as shown Photo 12 and pull forward to remove it.

PEFLEX PLT REMOVAL

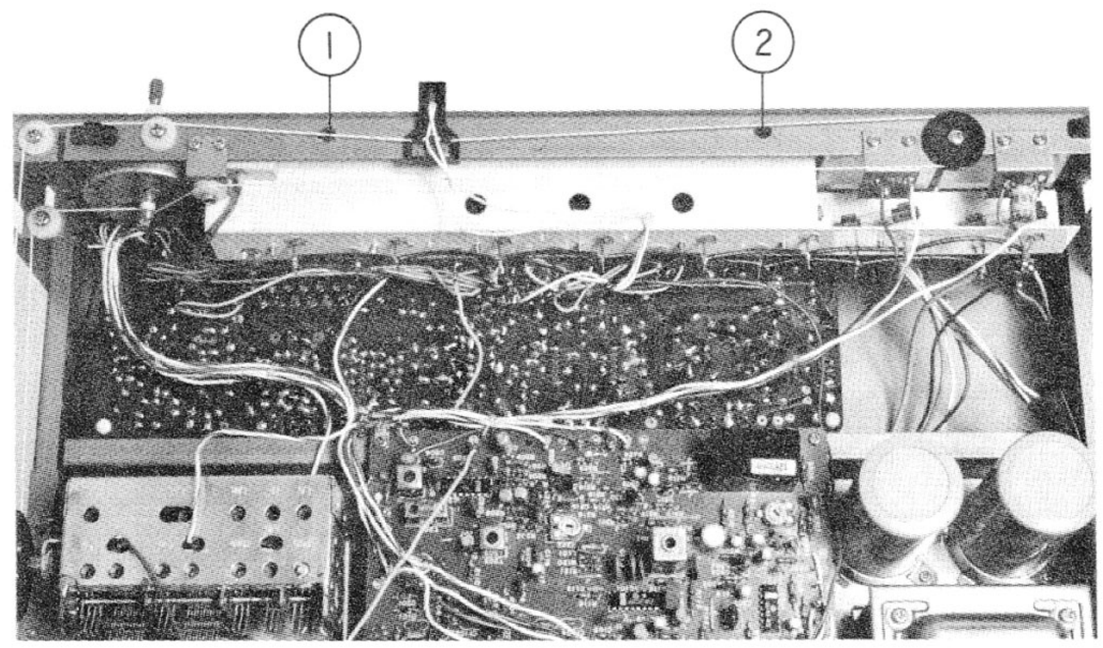

PHOTO 13

Remove screws (1 ~ 2) as shown in Photo 13 then pull foward to remove it.

DIAL MECHANISM

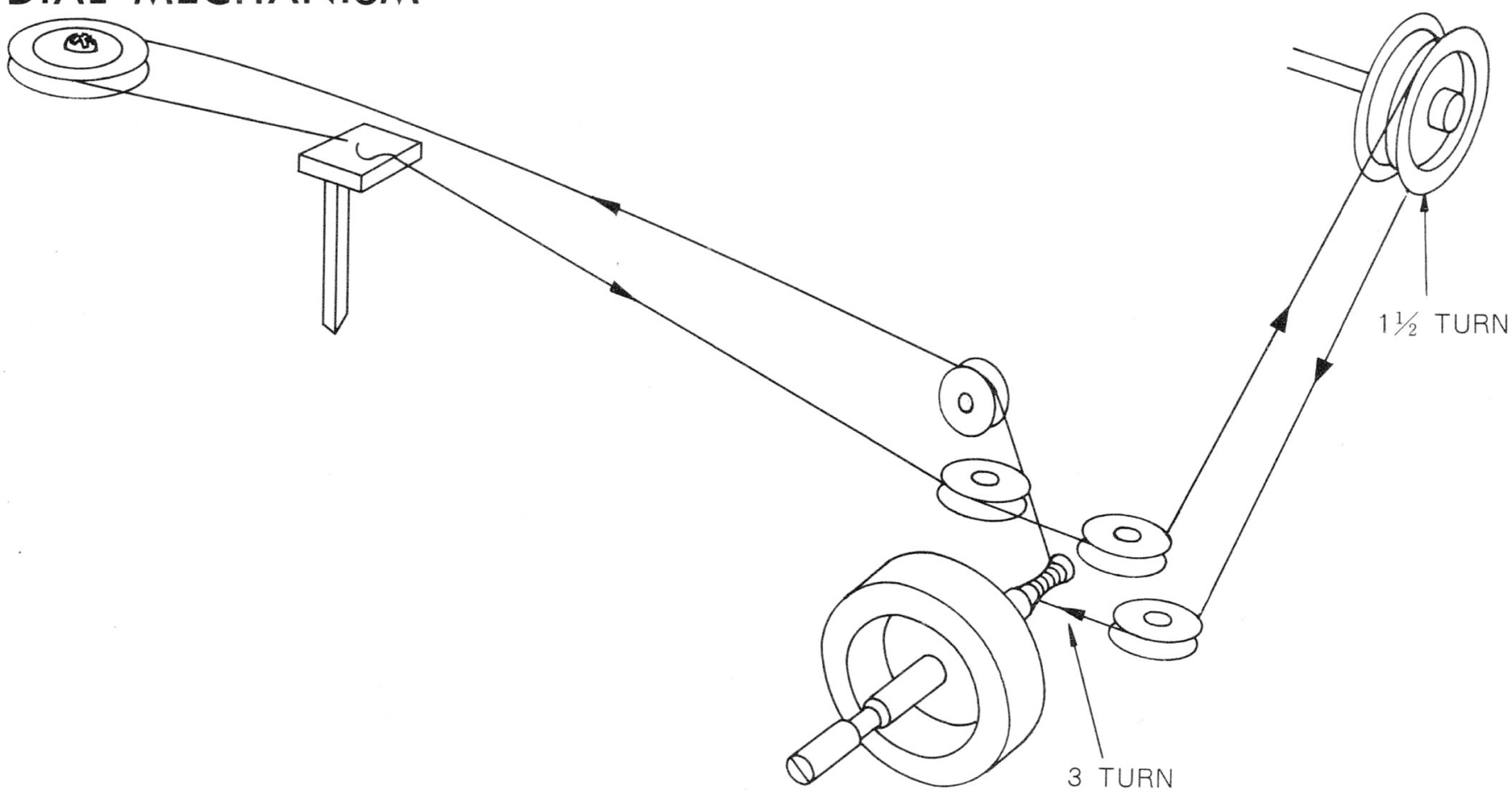

www.hifiengine.com

MEASUREMENT AND ADJUSTMENT

FM SECTION ADJUSTMENT

1. FM-IF ADJUSTMENT

For adjustment of the discriminator coil T101, connect the testing instruments as shown in Fig. 1 and then proceed as follows:

(1) With no RF signal applied to the receiver, adjust the lower core of T101 until the pointer of the tuning meter (M1) on the receiver indicates the center position of the meter scale.

(2) Apply RF signal to the receiver and adjust the tuning knob so that the tuning meter (M1) indicates the center position and the signal meter (M2) causes maximum deflection.

(3) Under this condition, adjust the upper core of T101 for minimum distortion.

(4) Repeat the above steps (1) through (3) two or three times so that the distortion factor is most improved.

Note: For adjusting point, refer to Fig. 3.

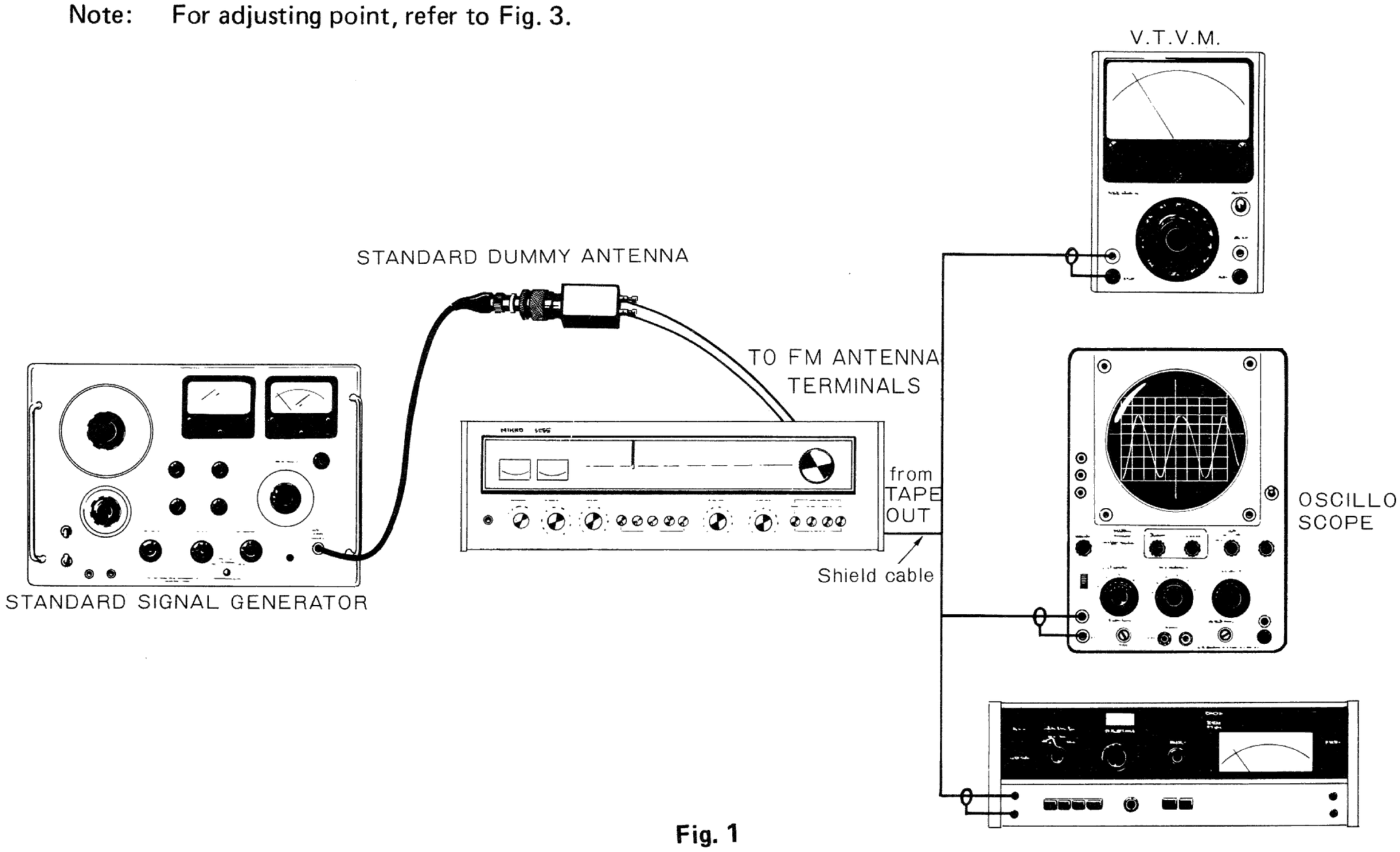

Fig. 1

2. FREQUENCY COVERAGE ADJUSTMENT

The tuner section is provided with the pre-adjusted front end, eliminating the need for frequency coverage adjustment; however, the dial scale may be checked by adjusting TCO and LO as necessary (see Fig. 2).

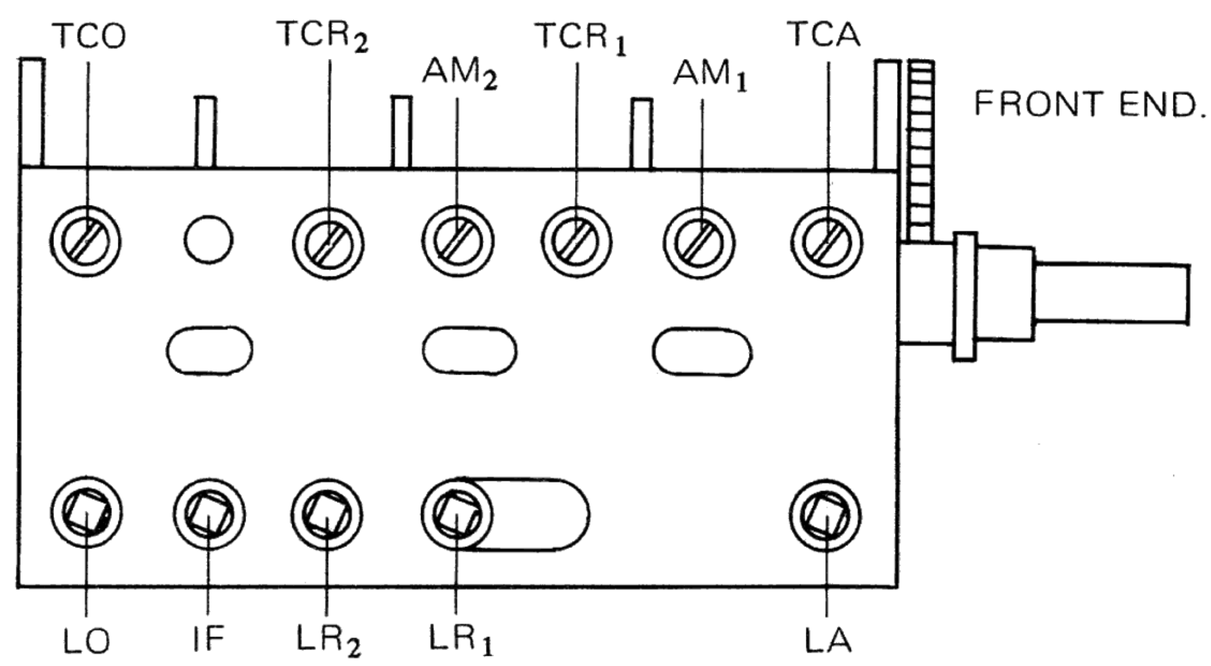

Fig. 2

3. TRACKING ADJUSTMENT

The tracking adjustment is not required because of the use of pre-adjusted front end. If necessary, adjust LA, LR_1, LR_2, TCA, TCR_1 and TCR_2 for maximum sensitivity. The input of SG should be controlled with ATT.

Note: For adjusting points, refer to Fig. 2.

www.hifiengine.com

4. FM SEPARATION ADJUSTMENT

With stereo-modulated RF signal applied to the receiver, make adjustment as follows:

(1) Turn the semi-fixed resistor R322 (HVR 20K-B) fully clockwise.

(2) Connect a frequency counter to the point #14 on the Tuner PCB Ass'y Board. Adjust the semi-fixed resistor R305 (HVR 5K-B) for the frequency of 19KHz ±19Hz.

(3) Adjust the semi-fixed resistor R322 (20K-B) for maximum stereo separation.

Note: For adjusting points, refer to Fig. 3

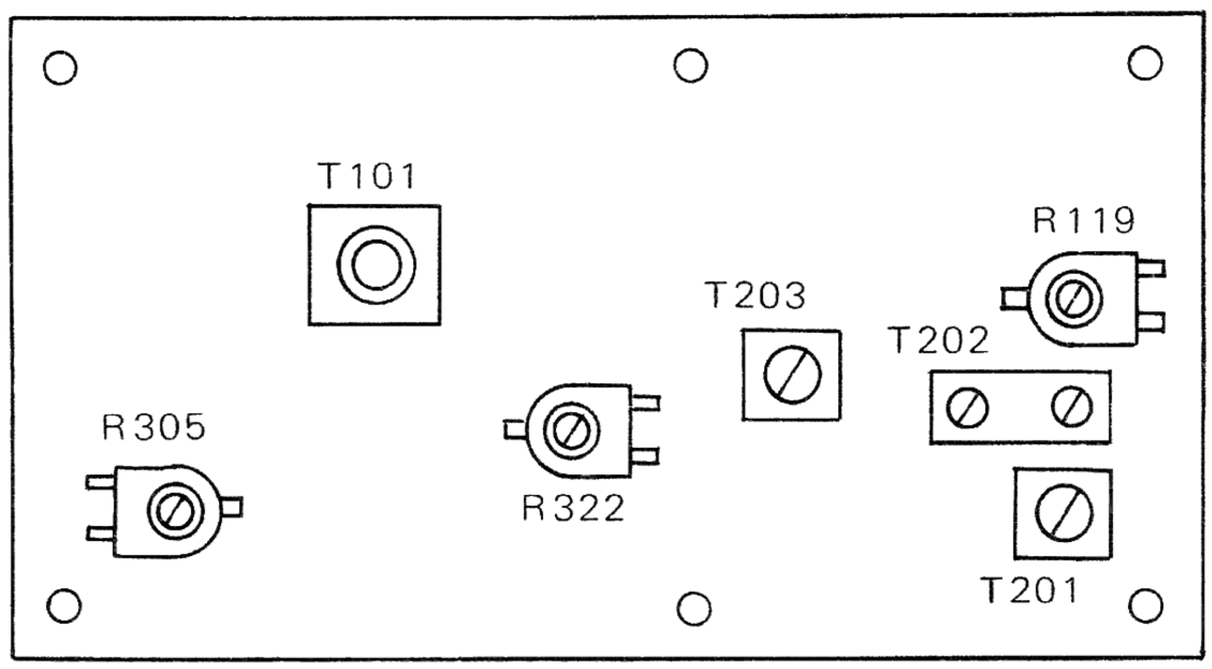

Fig. 3 TUNER PCB ASS'Y BOARD

AM SECTION ADJUSTMENT

The following is intended to describe the procedure of adjusting the AM section of the receiver using a sweep generator. In the adjustment, the output voltage is applied through inductive coupling.

1. AM-IF ADJUSTMENT

For adjustment, place a loop antenna near the receiver under test and observe the waveform of detector output (at the point #22 on the Tuner PCB Ass'y Board) displayed on the alignment oscilloscope.

The adjusting procedure is as follows:

(1) With the receiver set to a high receiving frequency (variable capacitor in full open position), adjust T202 and T203 until the IF waveform becomes maximum.

(2) If, in this case, the adjustment is difficult because of disturbing signals, the variable capacitor may be turned to facilitate the adjustment.

(3) The waveform displayed on the alignment oscilloscope is as shown in Fig. 4.

Note: For adjusting points, refer to Fig. 3.

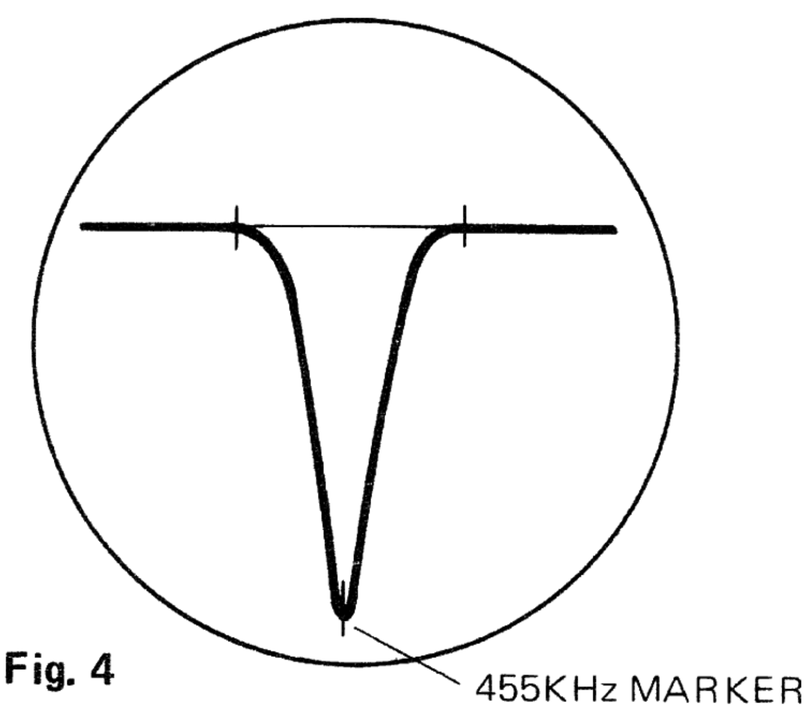

Fig. 4

2. FREQUENCY COVERAGE ADJUSTMENT

This adjustment is similar to the AM-IF adjustment. Switch the sweep generator from IF to RF and follow the procedure below.

www.hifiengine.com

(1) With the variable capacitor fully closed, adjust T201 for 520kHz. Then, fully open the variable capacitor and turn AM2 for 1,650kHz.
Repeat the above adjustments two or three times so that the receiving range of 520kHz to 1,650kHz can be obtained.

(2) The waveform displayed on the alignment oscilloscope is as shown in Fig. 5.

Note: For adjusting points, refer to Fig. 2. and Fig. 3.

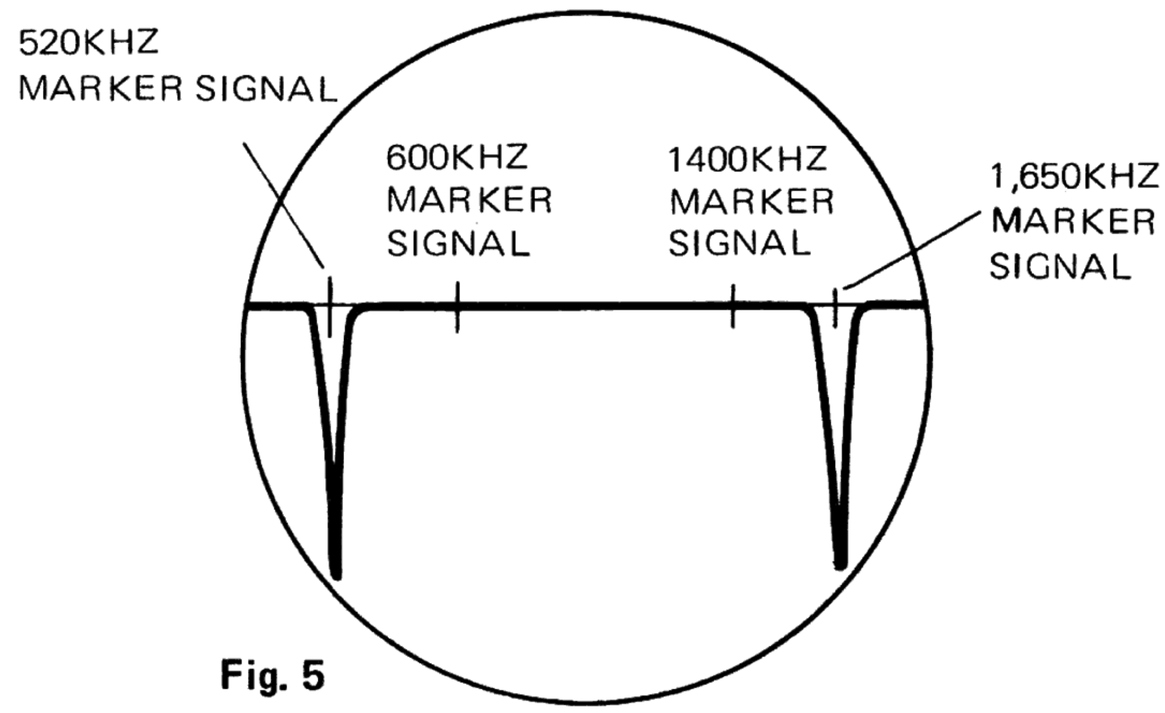

Fig. 5

3. TRACKING ADJUSTMENT

(1) Use the sweep generator in the same manner as described in Item 2 "Frequency Coverage Adjustment". First set the sweep waveform to the 600kHz marker and adjust AM ANT Coil (T3) for maximum waveform. Then set the receiver to 1400kHz and adjust AM1 for maximum waveform. Repeat the above adjustments two or three times so that tracking error can be fully eliminated.
Note: To obtain maximum sensitivity, the input signal level should be adjusted with an attenuator.

(2) To check tracking errors, use a jig made up of a copper wire ring and ferrite rod (see Fig. 6). Bring the ring and the ferrite rod alternately close to the ANT Coil and confirm that the sweep waveform is minimized.
Note: For adjusting points, refer to Fig. 2.

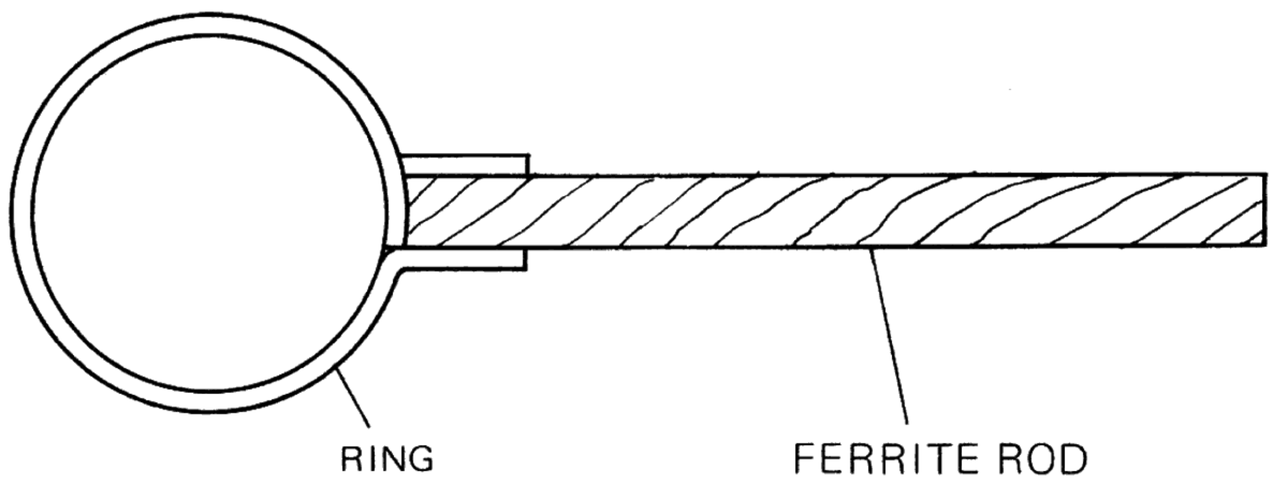

Fig. 6

AMPLIFIER SECTION ADJUSTMENT

(1) THE CENTER VOLTAGE ADJUSTMENT

Connect an 8-ohm dummy load resistor across the speaker terminals and set the Volume Control to the minimum position (fully counter-clockwise). Using a high sensitivity DC voltmeter, adjust R708 so that the voltage between GND (chassis) and TP9 on the Main Amplifier PCB Ass'y Board becomes 0±30mV. Similarly, adjust R709 so that the voltage between GND and TP16 becomes above value.

(2) IDLE CURRENT ADJUSTMENT

This adjustment is similar to the center voltage adjustment. Adjust R730 so that the voltage between TP 7 and TP 16 becomes 15mV, with the Volume control set to the minimum position. (Similary, adjust R731 so that the voltage between TP 18 and TP 16 becomes above value.)

www.hifiengine.com

PRINTED CIRCUIT
TUNER PCB ASSEMBLY BOARD

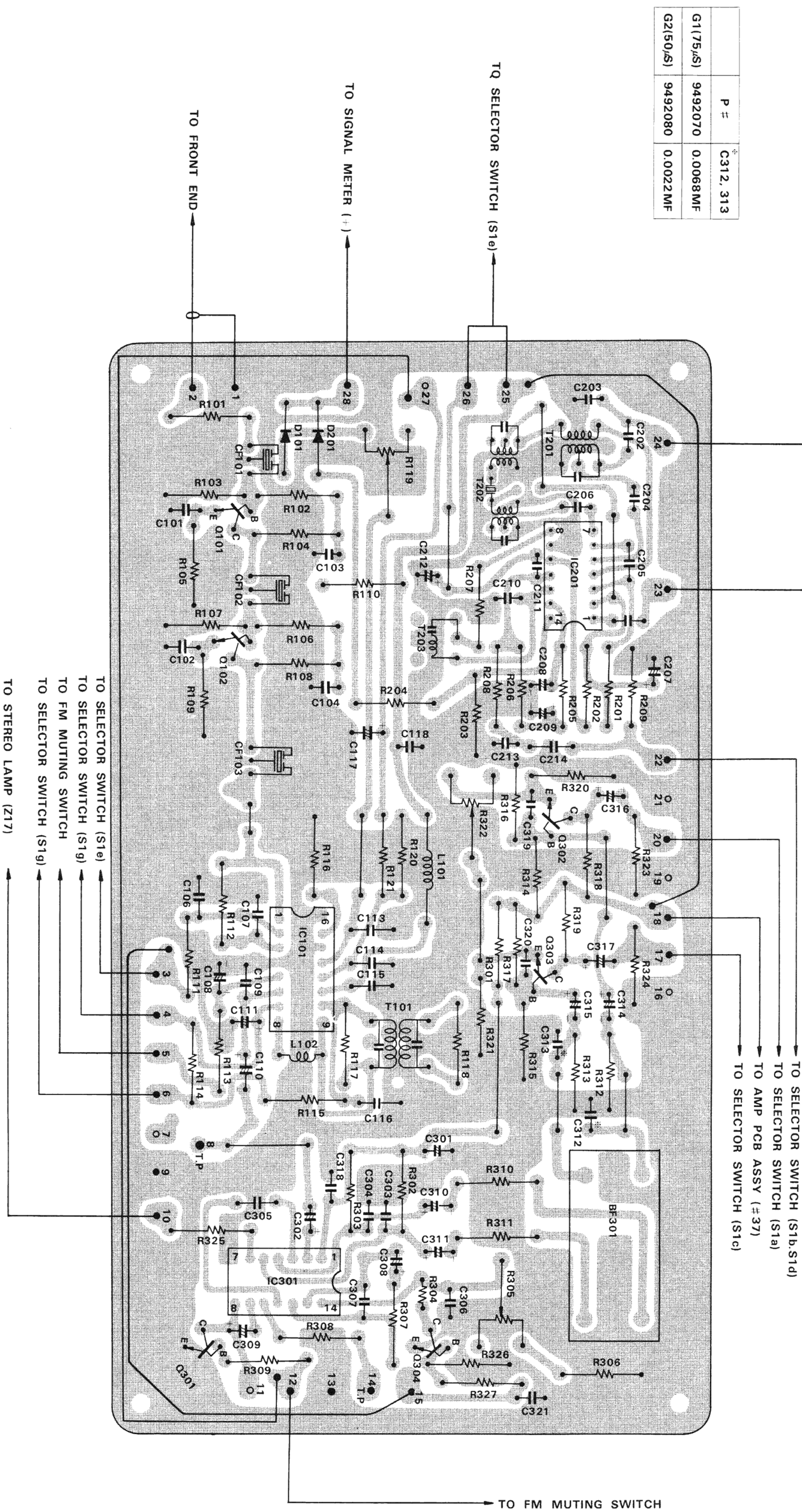

	P #	※C312, 313
G1(75μS)	9492070	0.0068MF
G2(50μS)	9492080	0.0022MF

www.hifiengine.com

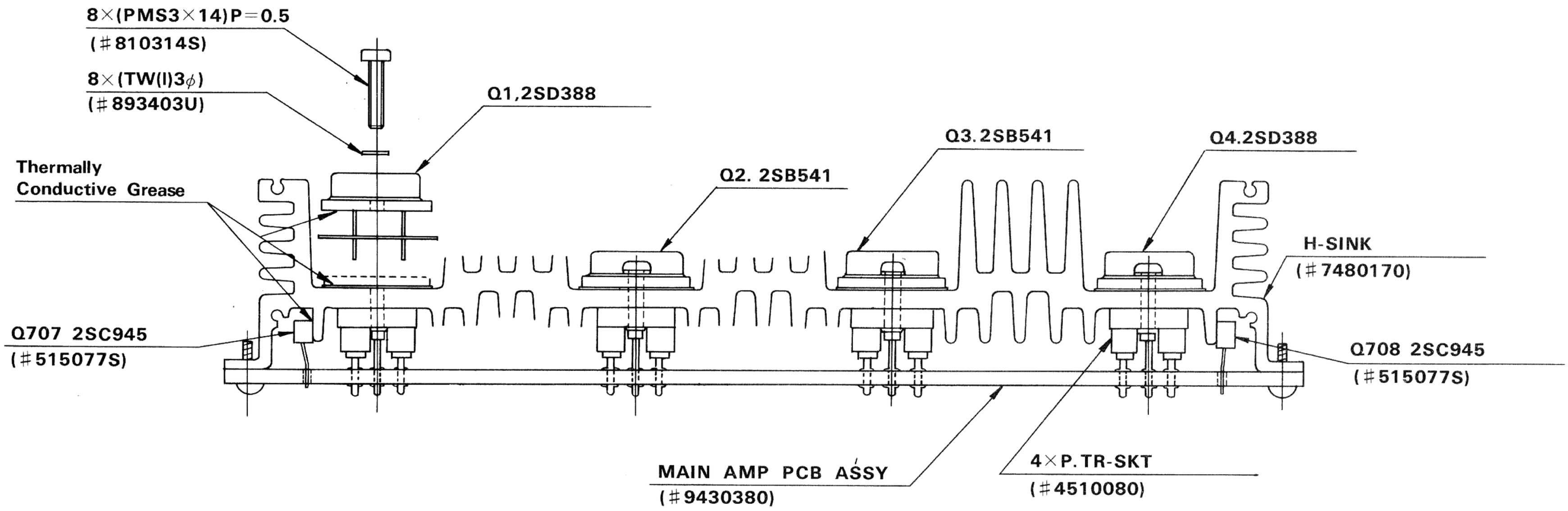

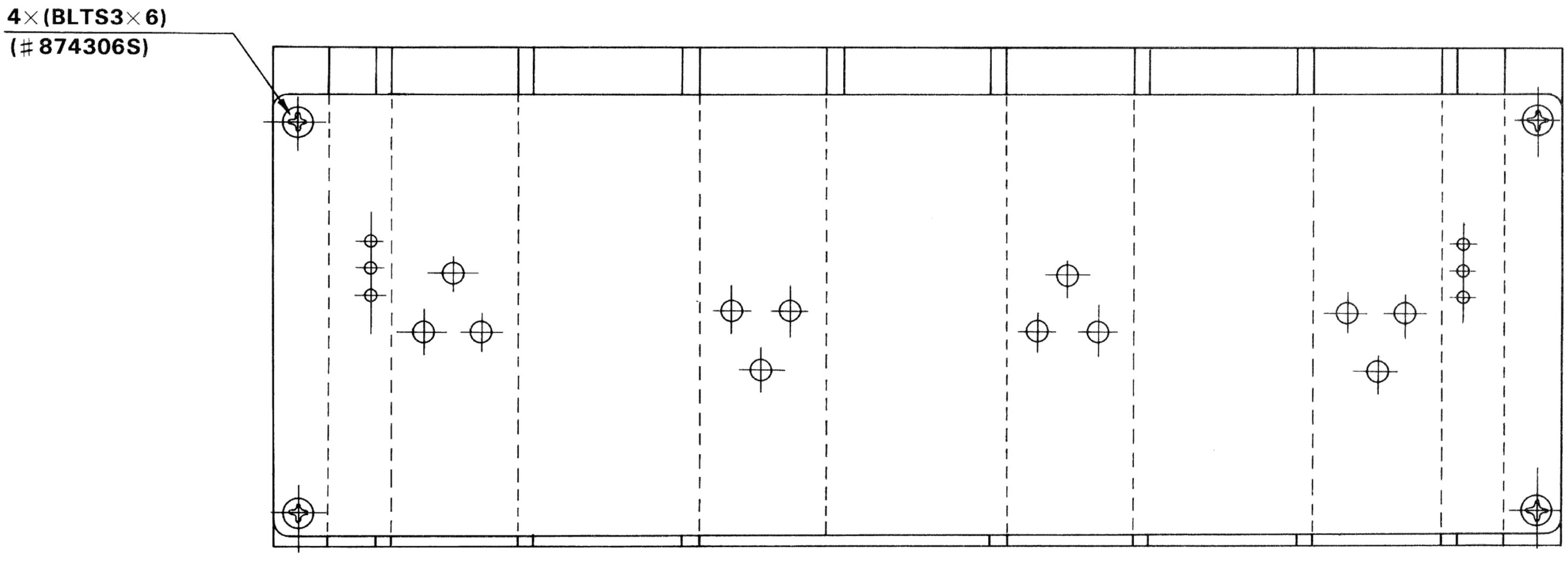

www.hifiengine.com

MAIN AMP PCB ASSEMBLY

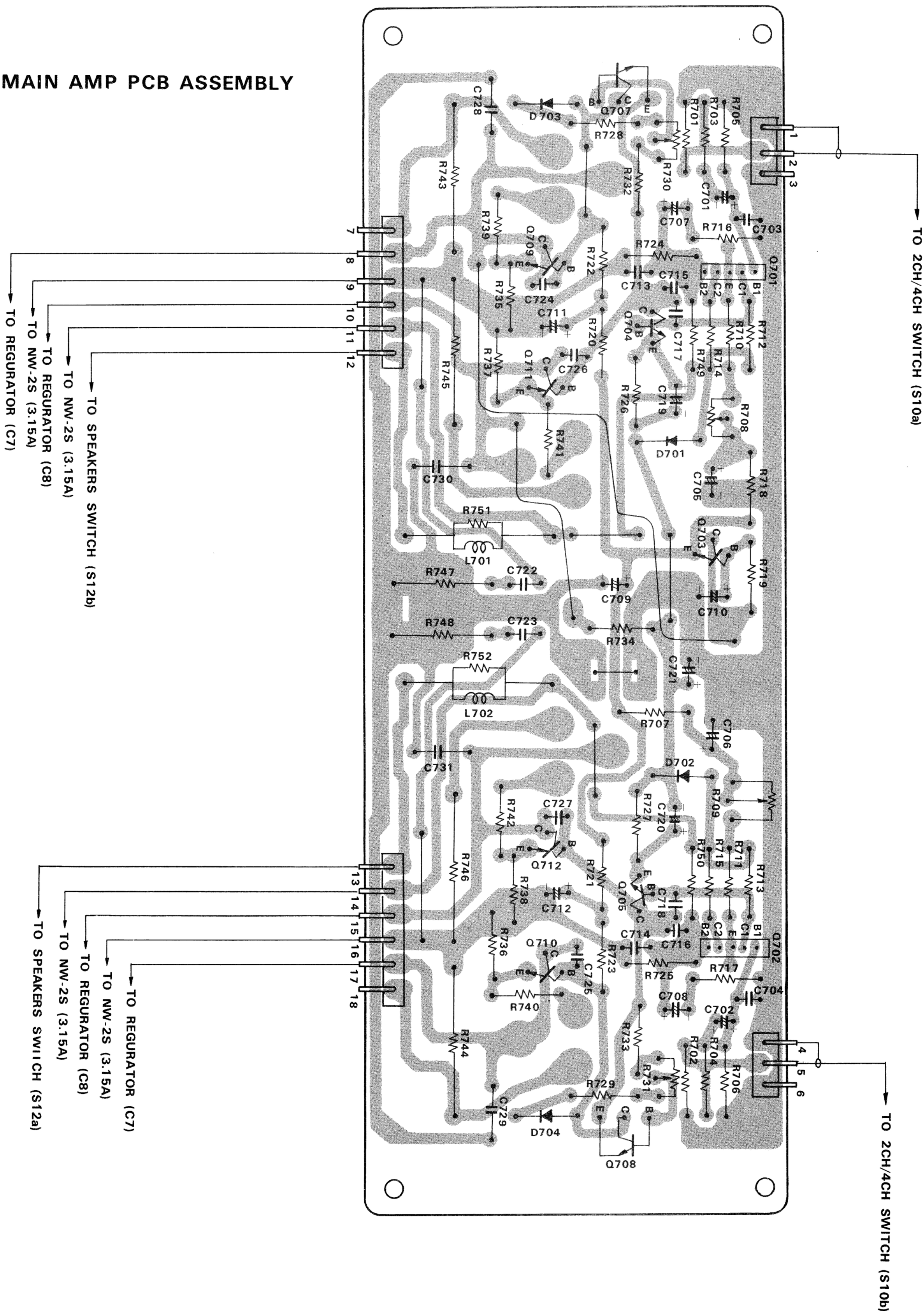

PRE AMP PCB ASSEMBLY

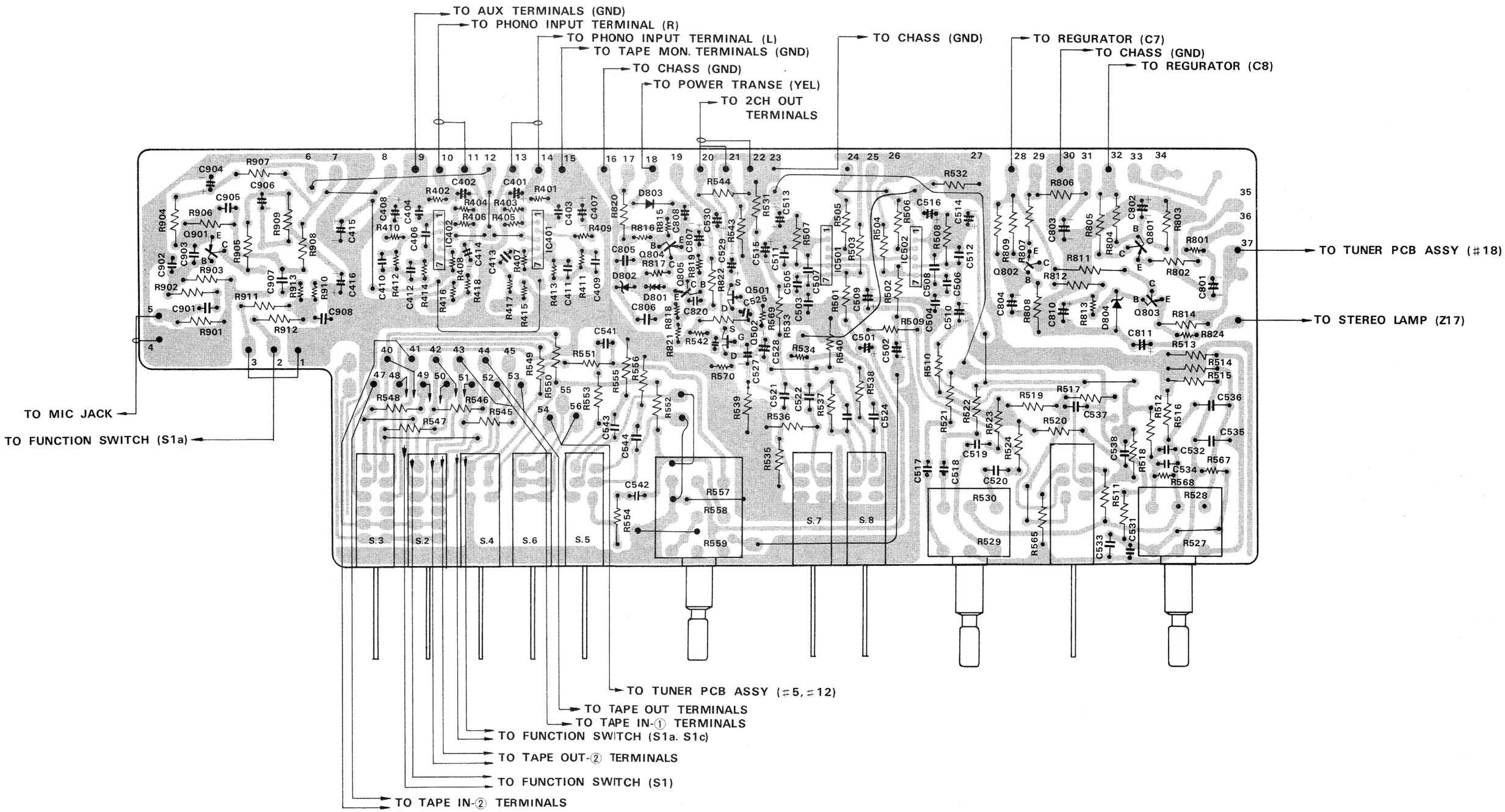

BLOCK DIAGRAM

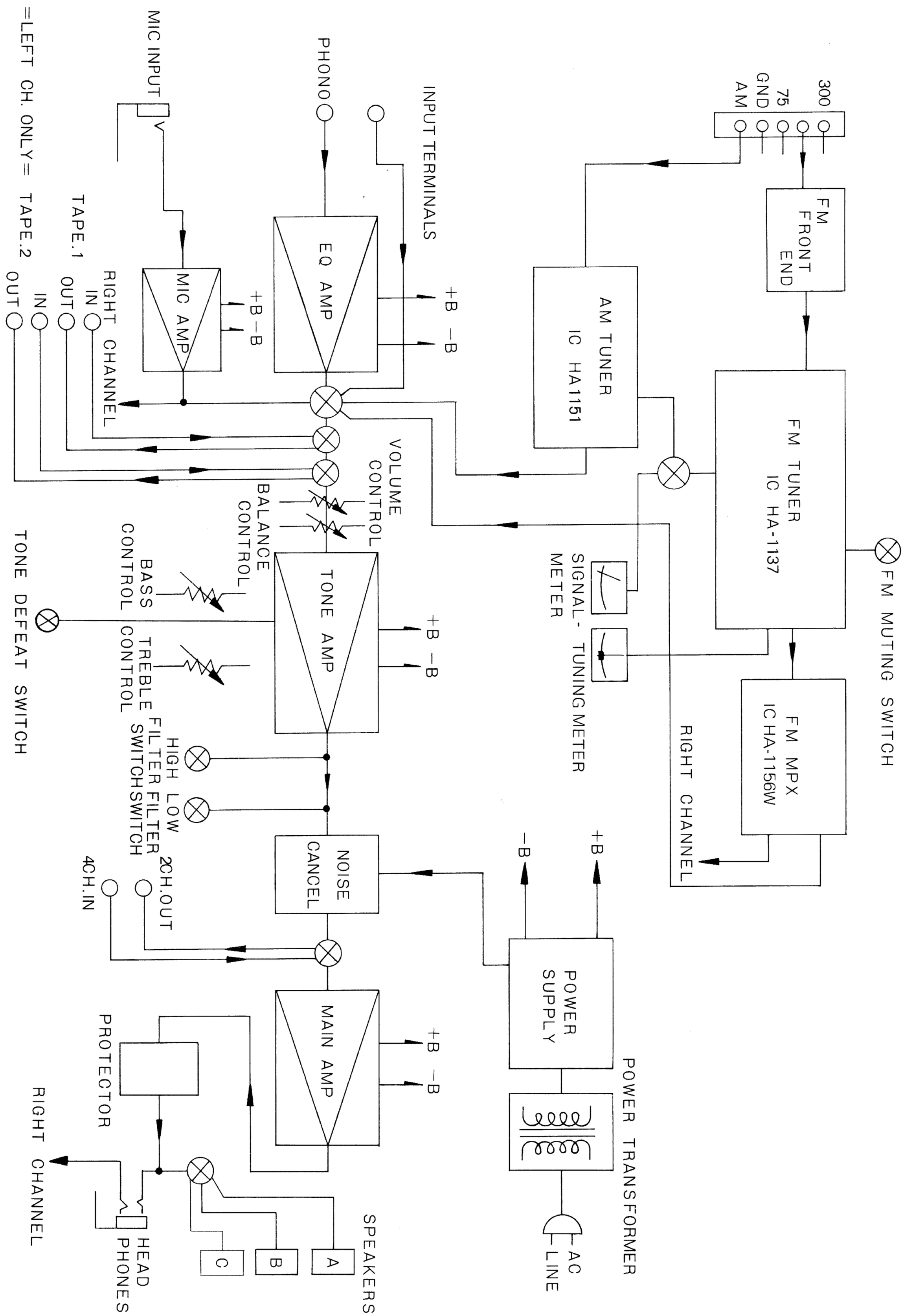

www.hifiengine.com

OVERALL DIAGRAM MODEL 8085

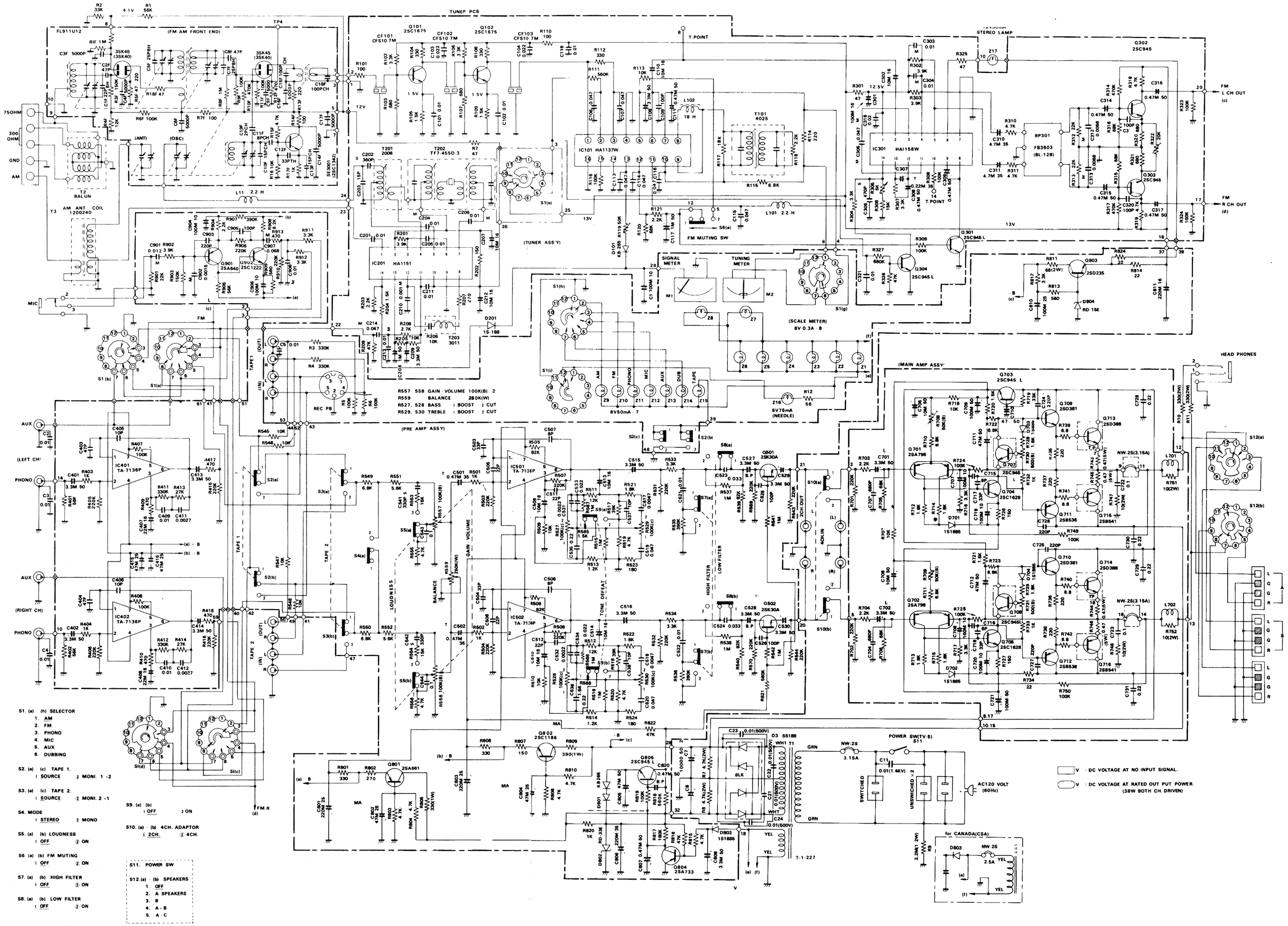

PARTIAL CHANGES MADE ACCORDING DESTINATION

120V	U.S.A

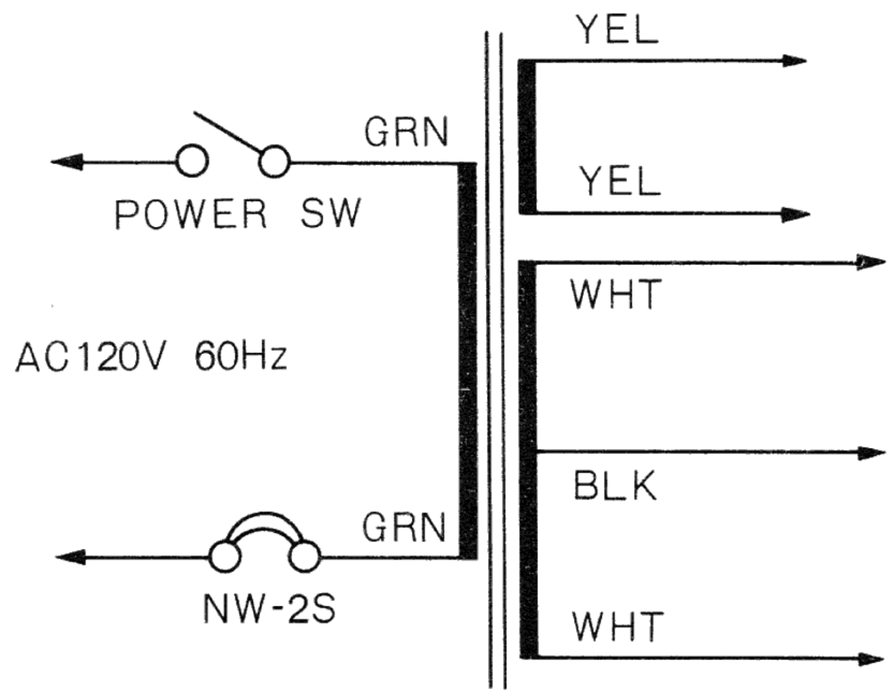

120V	CANADA

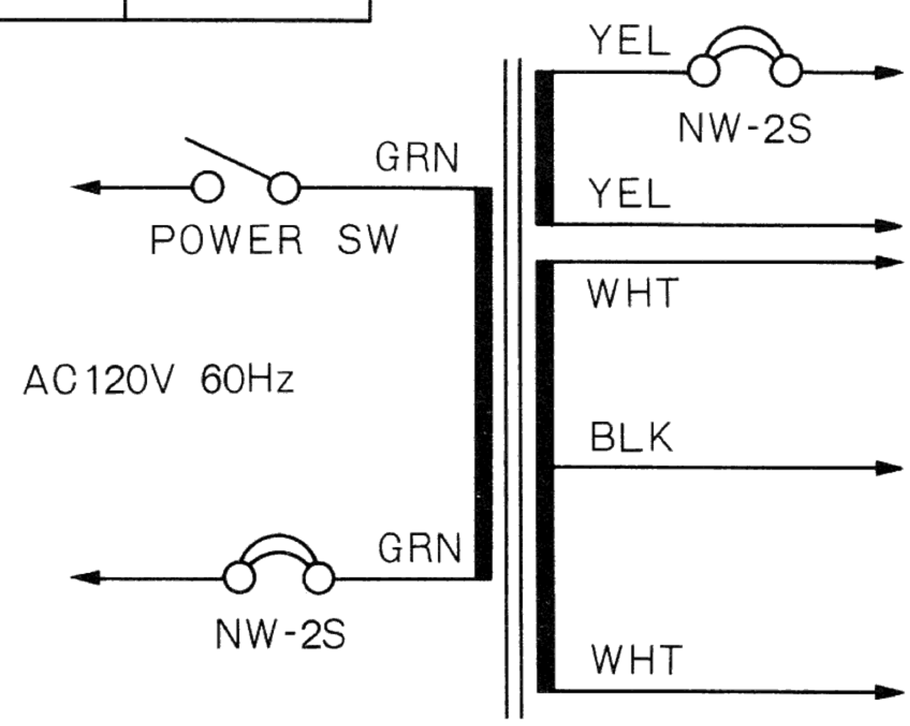

220V	SWEDEN	WEST-GERNANY
	DENMARK	

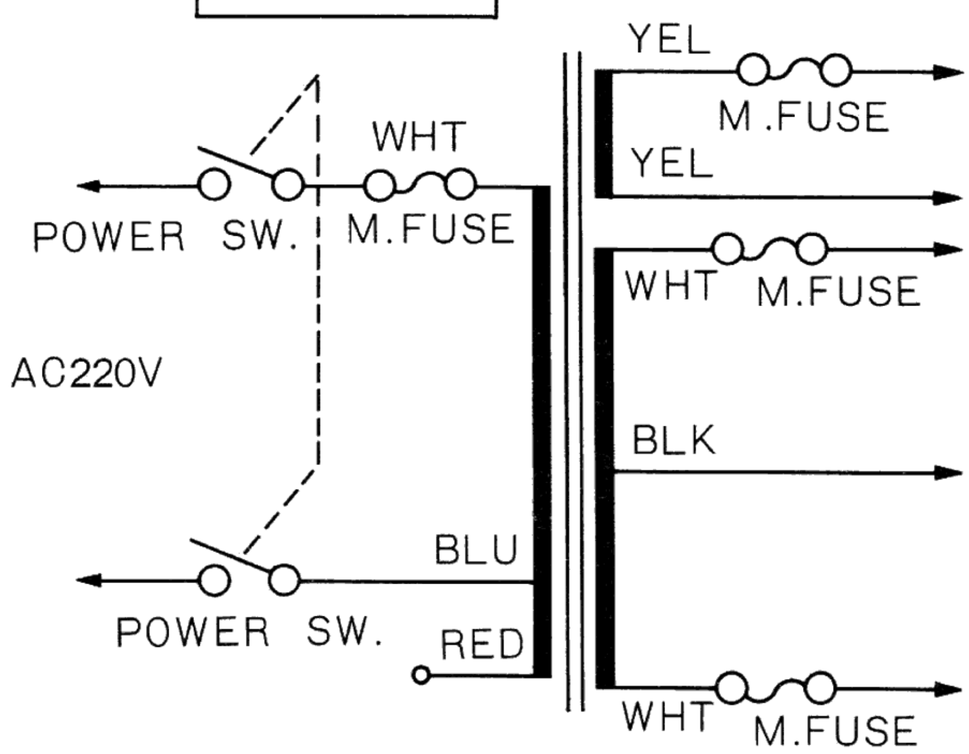

www.hifiengine.com

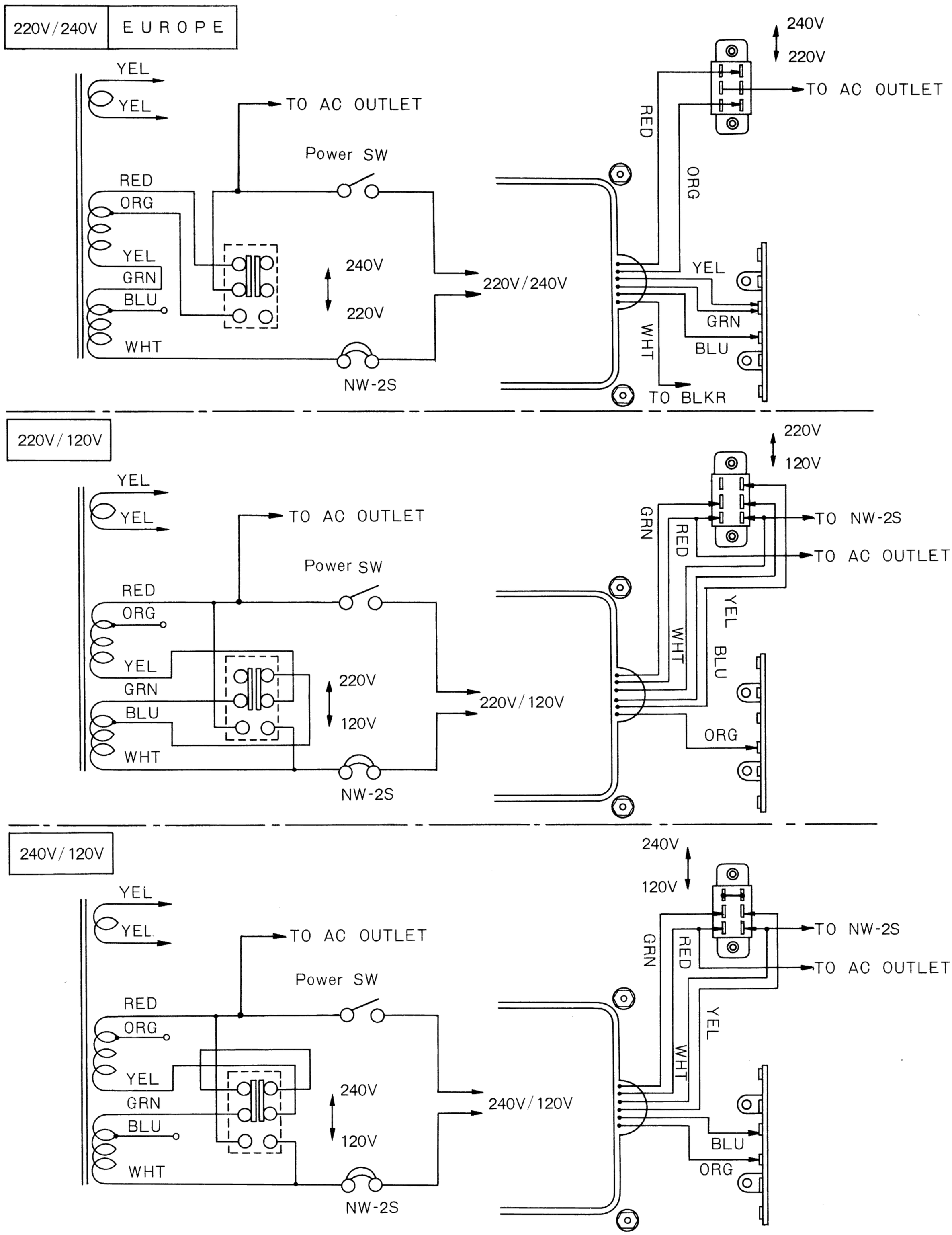
220V/240V
EUROPE
YEL
YEL
TO AC OUTLET
Power SW
RED
ORG
YEL
GRN
BLU
WHT
240V
220V
220V/240V
NW-2S
240V
220V
TO AC OUTLET
RED
ORG
YEL
GRN
WHT
BLU
TO BLKR
220V/120V
YEL
YEL
TO AC OUTLET
Power SW
RED
ORG
YEL
GRN
BLU
WHT
220V
120V
220V/120V
NW-2S
220V
120V
TO NW-2S
TO AC OUTLET
GRN
RED
YEL
WHT
BLU
ORG
240V/120V
YEL
YEL
TO AC OUTLET
Power SW
RED
ORG
YEL
GRN
BLU
WHT
240V
120V
240V/120V
NW-2S
240V
120V
TO NW-2S
TO AC OUTLET
GRN
RED
YEL
WHT
BLU
ORG

PARTS LIST

Parts No.	Description	Symbol
FINAL ASSEMBLY		
982480 O	CARTON BOX	
984058 O	STYROL PAD	
960149 E	OWNERS MANNAL	
961119 E	DIAGRAM	
967003 A	WARRANTY CARD	
969004 O	POLI CLOTH	
458136 O	Q-MATCH ANTENNA	
788310 O	PANEL SUB ASSEMBLY	
700167 O	DUST RING	
785104 O	KNOB R9G1-37	TUNING
785102 O	KNOB R9GL-23D	SPEAKERS. SELECTOR
785112 O	KNOB R9GL-20F	VOLUME
785110 O	KNOB R9GL-20CF	TONE
785114 O	KNOB R9GL-22R	TONE BALANCE
785095 O	KNOB 8GL-9CLS	LEVER SWITCH
783105 O	WOOD COVER	
887416 W	TFTS 4×16	WOOD COVER
732362 O	BOTOM PLT	
740078 O	POLT FOOT 30×14	
CHASS ASSEMBLY		
110227 O	POWER TRANSE T-1-227	T1
740081 O	DIAL DRUM 40ϕ	
744029 O	SPRING (J)	
121070 O	PEAKING COIL	L11
212550 Q	E-CAP 50L10000MF CE62W	C7, C8
560034 S	DIODE S5188	D3
786046 O	NEEDLE SUB ASSEMBLY	
580505 O	PL-5 5V75MA WIRE FR-1	Z16
362472 S	MO-RES RS2S 4.7K OHM 2W	R7, R8
238103 P	C-CAP 0.01MF $\left(^{+100}_{-0}\%\right)$ 500V	C21, C22, C23, C24
491002 O	FM FRONTEND FL911U12	
324563 J	RES RD1/4S 56K OHM 1/4W	R1
324333 J	RES RD1/4S 33K OHM 1/4W	R2
324470 J	RES RD1/4S 47 OHM 1/4W	R17
FRONT PLATE ASSEMBLY		
580806 O	PL-8 8V0.3A	Z1~Z8
580107 O	PL-12 12V30mA WIRE FR-1	Z17
580810 O	PL-8 8V50mA WIRE FR-1	Z9~Z14
324330 J	RES RD1/4S 33 OHM 1/4W	R12
712098 O	PULLY SHAFT 4L	
740079 O	PULLY 9ϕ	
740083 O	PULLY 20ϕ	
715212 O	DIAL SHAFT	

Parts No.	Description	Symbol
780189 O	DIAL SCALE	
458155 O	METER 49H219 (TUNING)	M2
458156 O	METER 49H218 (SIGNAL)	M1
405094 O	ROTARY SW. SR26N 5-10-6	S1(SELECTOR)
405093 O	ROTARY SW. SR26N 1-2-6	S12(SPEAKERS)
402509 O	LEVER SW SYO2U74SM TV-5	S11(POWER SW)
239103 P	C-CAP 0.01MF $\left(^{+100}_{-0}\%\right)$ 1.4KV	C11
455013 O	EAR JACK SE-MONO	MIC
455010 O	EAR JACK SE-(US)	HEAD PHONE
740085 O	PANEL SPACER	
362331 S	MO-RES RS2S 330 OHM 2W	R10, R11
211130 Q	E-CAP 10R100 CE04W	C1
BACK PLATE ASSEMBLY		
606002 J	PLUG CORD KP-2	
740062 O	CORD STOPER SR-3P-4	
450015 O	AC SOCKET	
490069 O	NW-2S 3.15A ℓ =12	
446047 O	PUSH TERMINAL 4P	SPEAKERS
445052 O	ANTENNA TERMINAL	
121042 O	BALUN	T2
120024 O	AM BAR ANTENNA	T3
444081 O	US PIN TER 4P×2	
444047 O	US PIN TER 2P×2	
402044 O	SLIDE SW SL-13-1OH	S10
453022 O	DIN. CONNECTOR	
324334 J	RES RD1/4S 330K OHM 1/4W	R3, R4
324104 J	RES RD1/4S 100K OHM 1/4W	R5, R6
315225 K	RES RC1/2GF 2.2M OHM 1/2W	R9
TUNER PCB ASSEMBLY		
462025 O	TUNER PCB	
491002 O	FRONT END	
FM IF SECTION		
518038 S	IC HA1137W	IC101
515082 S	TR 2SC1675	Q101, 102
505011 S	DIODE HV KB-265	D101
121067 O	INDUCTOR 180J 18μH	L102
121070 O	PEAKIG COIL 2.2μH	L101
124025 O	FM DET	T101
430048 O	KVSF10-7SNF (B)50K	R119
128023 A	C-FIL. SEE10.7MA8 (RED)	CF101, 102, 103
324101 J	RES RD1/4S 100 ONM 1/4W	R101, 110
324271 J	RES RD1/4S 270 OHM 1/4W	R114
324331 J	RES RD1/4S 330 OHM 1/4W	R104, 108, 112

www.hifiengine.com

Parts No.	Description	Symbol
324681 J	RES RD1/4S 680 OHM 1/4W	R163, 107
324152 J	RES RD1/4S 1.5K OHM 1/4W	R105, 109
324222 J	RES RD1/4S 2.2K OHM 1/4W	R121, 118
324332 J	RES RD1/4S 3.3K OHM 1/4W	R102, 106
324103 J	RES RD1/4S 10 KOHM 1/4W	R113, 115
324183 J	RES RD1/4S 18K OHM 1/4W	R117
324104 J	RES RD1/4S 100K OHM 1/4W	R116
324564 J	RES RD1/4S 560K OHM 1/4W	R111
232101 K	C-CAP 100PF(±10%) SL	C109
231103 Z	C-CAP 0.01MF $\left(\begin{smallmatrix}+80\% \\ -20\end{smallmatrix}\right)$ CK45YG	C101, 102, 118
231203 Z	C-CAP 0.02MF $\left(\begin{smallmatrix}+80\% \\ -20\end{smallmatrix}\right)$ CK45YG	C103, 104
231473 Z	C-CAP 0.047MF $\left(\begin{smallmatrix}+80\% \\ -20\end{smallmatrix}\right)$ CK45YG	C116, 115, 106 C107, 113, 114
211505 Q	E-CAP 50R0.47 CE04W	C111
211513 Q	E-CAP 50R3.3 CE04W	C108
211220 Q	E-CAP 16R10 CE04W	C110
211510 Q	E-CAP 50R1 CE04W	C117

AM SECTION

518039 S	IC HA1151	IC201
500009 G	DIODE IS1881 FM-1	D201
122006 O	AM OSC COIL	T201
123011 O	AM IFT COIL	T203
128021 O	C-FIL. CFT-455D-3	T202
324151 J	RES RD1/4S 150 OHM 1/4W	R202
324271 J	RES RD1/4S 270 OHM 1/4W	R207
324152 J	RES RD1/4S 1.5K OHM 1/4W	R204
324222 J	RES RD1/4S 2.2K OHM 1/4W	R203
324272 J	RES RD1/4S 2.7K OHM 1/4W	R208
324392 J	RES RD1/4S 3.9K HOM 1/4W	R201
324403 J	RES RD1/4S 10K OHM 1/4W	R205, 206
324473 J	RES RD1/4S 47K OHM 1/4W	R209
232150 K	C-CAP 15PF(±10%) SL	C203
231103 Z	C-CAP 0.01MF $\left(\begin{smallmatrix}+80\% \\ -20\end{smallmatrix}\right)$ CK45 YG	C211, 205, 206
222102 K	M-CAP 0.001MF (±10%) CQ92M	C210
222473 K	M-CAP 0.047MF (±10%) CQ92M	C214
222103 K	M-CAP 0.01MF (±10%) CQ92M	C204, 213, 206
223361 K	S-CAP 360PF (±10%) CQ09S	C202
211510 Q	E-CAP 50R1 CE04W	C208
211513 Q	E-CAP 50R3.3 CE04W	C209
211220 Q	E-CAP 16R10 CE04W	C207, 212

MPX. SECTION

518036 S	IC HA1156W	IC301
515077 S	TR 2SC945 Ⓛ	Q301, 302, 303, 304
128026 O	MPX FIL. FB-3603	BF301
32470 J	RES. RD1/4S 47 OHM 1/4W	R301, 325
324681 J	RES RD1/4S 680 OHM 1/4W	R320, 321
324332 V	RES RD1/4U 3.3K OHM 1/4W	R304
324332 J	RES RD1/4S 3.3K OHM 1/4W	R307
324392 J	RES RD1/4S 3.9K OHM 1/4W	R302, 303
324472 J	RES RD1/4S 4.7K OHM 1/4W	R318, 319, 310, 311
324153 J	RES RD1/4S 15K OHM 1/4W	R306
324223 J	RES RD1/4S 22K OHM 1/4W	R312, 313
324683 J	RES RD1/4S 68K OHM 1/4W	R316, 315
324473 J	RES RD1/4S 47K OHM 1/4W	R326
324104 J	RES RD1/4S 100K OHM 1/4W	R308, 323, 324, 309
324474 J	RES RD1/4S 470K OHM 1/4W	R314, 317
324684 J	RES RD1/4S 680K OHM 1/4W	R327
430031 O	KUSF 10-7 ANF (B) 5K	R305
430033 O	KVSF 10-7 ANF (B) 20K	R322
222103 K	M-CAP. 0.01MF(±10%) CQ92M	C303, 304
222222 K	M-CAP. 0.0022MF(±10%) CQ92M	(C312, 313) 50μsec
222682 K	M-CAP. 0.0068MF(±10%) CQ92M	(C312, 313) 75μsec
222473 K	M-CAP. 0.047MF(±10%) CQ92M	C305
252402 M	T-CAP 35D 0.22 CS15E	E307
231103 Z	C-CAP 0.01MF CK45 YG	C321
231203 Z	C-CAP 0.02 MF CK45 YG	C318
223471 J	S-CAP 470PF(±5%) CO09S	C306
211505 Q	E-CAP 50R0.47 CE04W	C309, 308, 314 C315, 316, 317
211415 Q	E-CAP 35R4.7 CE04W	C310, 311
211230 Q	E-CAP 16R100 CE04W	C301
211220 Q	E-CAP 16R10 CE04W	C302
232101 K	C-CAP 100PF(±10%) SL	C319, 320

MAIN AMP ASSEMBLY

943038 O	MAIN AMP PCB ASSY	
874306 S	BLTS 3×6	
748017 O	HEAT SINK	
451008 O	POWER TRANSISTOR SOCKET	

www.hifiengine.com

Parts No.	Description	Symbol
513041 S	TR. 2SD388	Q713, 714
513053 S	TR. 2SB541	Q715, 716
810314 S	PMS 3×14 P=0.5	
893403 U	TW(I) 3φ	

MAIN AMP PCB ASSEMBLY

Parts No.	Description	Symbol
463059 O	MAIN AMP PCB	
510039 S	TR. 2SB536	Q711, 712
510038 S	TR. 2SD381	Q709, 710
515078 S	TR. 2SC1628 Ⓨ	Q704, 705
515077 S	TR. 2SC945 Ⓛ	Q703, 707, 708
514086 S	TR. 2SA798	Q701, 702
560032 S	DIODE IS1885	D701, 702, 703, 704
430044 O	KVSF10-5BM (B) 500 OHM	R730, 731
430050 O	KVSF10-5BM (B) 50K OHM	R708, 709
121069 O	CH COIL ASSY	L701, 702
362100 S	MO-RES RS2S 10 OHM 2W	R751, 752
363479 B	CEM-RES. RGB5L 0.47OHM 5W	R743, 744, 745, 746
362100 B	MO-RES RS2S 10 OHM 2W	R747, 748
324688 J	RES RD1/4S 6.8 OHM 1/4W	R739, 740, 741, 742
324151 J	RES RD1/4S 150 OHM 1/4W	R726, 727
324221 J	RES RD1/4S 220 OHM 1/4W	R735, 736, 737, 738
324220 J	RES RD1/4S 22 OHM 1/4W	R734
324102 J	RES RD1/4S 1K OHM 1/4W	R732, 733
324152 J	RES RD1/4S 1.5 OHM 1/4W	R720, 721
324182 J	RES RD1/4S 1.8K OHM 1/4W	R728, 729, 712 R713, 714, 715
324222 J	RES RD1/4S 2.2K OHM 1/4W	R703, 704
324332 J	RES RD1/4S 3.3K OHM 1/4W	R716, 717
324682 J	RES RD1/4S 6.8K OHM 1/4W	R722, 723, 710, 711
324103 J	RES RD1/4S 10K OHM 1/4W	R707, 708
324683 J	RES RD1/4S 68K OHM 1/4W	R705, 706
324333 J	RES RD1/4S 33K OHM 1/4W	R719
324104 J	RES RD1/4S 100K OHM 1/4W	R724, 725, 749, 750
324224 J	RES RD1/4S 220K OHM 1/4W	R701, 702
211513 L	E-CAP 50R3.3 CE04W-LC	C701, 702
211525 Q	E-CAP 50R47 CE04W	C711, 712, 710
211520 Q	E-CAP 50R10 CE04W	C705, 706
211530 Q	E-CAP 50R100 CE04W	C721, 709
211130 Q	E-CAP 10R100 CE04W	C707, 708, 719, 720
222104 K	M-CAP 0.1MF(±10%) CQ92M	C722, 723

Parts No.	Description	Symbol
222224 K	M-CAP 0.22MF(±10%) CQ92M	C728, 729, 730, 731
232609 D	C-CAP 6PF±0.5PF SL	C713, 714, 715, 716
232330 K	C-CAP 33PF(±10%) SL	C717, 718
232221 K	C-CAP 220PF(±10%) SL	C724,725,726,727
232681 K	C-CAP 680PF(±10%) SL	C703, 704

PRE AMP PCB ASSEMBLY

Parts No.	Description	Symbol
463060 O	PRE AMP PCB	

MIC AMP SECTION

Parts No.	Description	Symbol
514069 S	TR 2SA640	Q901
515068 S	TR 2SC1222	Q902
324561 J	RES RD1/4S 560 OHM 1/4W	R909
324222 J	RES RD1/4S 2.2K OHM 1/4W	R904
324332 J	RES RD1/4S 3.3K OHM 1/4W	R911, 912
324392 J	RES RD1/4S 3.9K OHM 1/4W	R902
324822 J	RES RD1/4S 8.2K OHM 1/4W	R908
324223 J	RES RD1/4S 22K OHM 1/4W	R901
324563 J	RES RD1/4S 56K OHM 1/4W	R905
324224 J	RES RD1/4S 220K OHM 1/4W	R906
324394 J	RES RD1/4S 390K OHM 1/4W	R907
324154 J	RES RD1/4S 150K OHM 1/4W	R903
324224 V	RES RD1/4U 220K OHM 1/4W	R910
324471 V	RES RD1/4U 470 OHM 1/4W	R913
222683 K	M-CAP 0.068MF(±10%) CQ92M	C907
211325 Q	E-CAP 25R47 CE04W	C415, 416
211130 Q	E-CAP 10R100 CE04W	C904, 906
222123 K	M-CAP 0.012MF(±10%) CQ92M	C901
222152 K	M-CAP 0.0015MF(±10%) CQ92M	C902
222103 K	M-CAP 0.01MF(±10%) CQ92M	C908
232221 K	C-CAP 220PF(±10%) SL	C903
232101 K	C-CAP 100PF(±10%) SL	C905

EQ AMP SECTION

Parts No.	Description	Symbol
518040 S	IC TA-7136P	TC401, 402
402512 O	LV. SLD SW S×15-9 Ⓜ	S4.S5(a)~(b), S6
402514 O	LV. SLD SW S×15-11 Ⓑ	S2(a)~(b), S3(a)~(b)
434010 O	FJ60E. 250KW-100KB×2	R557, 558, 559
324102 V	RES RD1/4U 1K OHM 1/4W	R403, 404

www.hifiengine.com

Parts No.	Description	Symbol
324563 V	RES RD1/4U 56K OHM 1/4W	R401, 402
324104 V	RES RD1/4U 100K OHM 1/4W	R407, 408
324224 V	RES RD1/4U 220K OHM 1/4W	R405, 406, 415, 416
324471 V	RES RD1/4U 470 OHM 1/4W	R409, 410, 417, 418
324273 V	RES RD1/4U 27K OHM 1/4W	R413, 414
324334 V	RES RD1/4U 330K OHM 1/4W	R411, 412
211513 Q	E-CAP 50R3.3 CE04W	C401, 402, 413, 414
211222 Q	E-CAP 16R22 CE04W	C407, 408
222272 J	M-CAP 0.0027MF(±5%) CQ92M	C411, 412
222103 J	M-CAP 0.01MF(±5%) CQ92M	C409, 410
232100 K	C-CAP 10PF(±10%) SL	C405, 406
232470 K	C-CAP 47PF(±10%) SL	C403, 404
	TONE FILTER MUTING SECTION	
518040 S	IC TA-7136P	IC501, 502
516013 S	FET 2SK30A	Q501, 502
515077 S	TR 2SC945 Ⓛ	Q805
514074 S	TR 2SA733	Q804
505011 S	D. HV KB-265	D801
502029 S	ZD RD33E	D802
560032 S	D. IS1885	D803
402512 O	LV SLD SW SX15-9 Ⓜ	S7(a)~(b), S8(a)~(b) S9(a)~(b)
433005 O	VR DJ20E-100K(C)×2	R527, 528, 529, 530
324152 J	RES RD1/4S 1.5 K OHM 1/4W	R565, 566
324181 J	RES RD1/4S 180K OHM 1/4W	R523, 524
324102 J	RES RD1/4S 1K OHM 1/4W	R501, 502, 820
324122 J	RES RD1/4S 1.2 K OHM 1/4W	R513, 514
324182 J	RES RD1/4S 1.8 K OHM 1/4W	R521, 522
324332 J	RES RD1/4S 3.3 K OHM 1/4W	R533
324472 J	RES RD1/4S 4.7 K OHM 1/4W	R519, 520, 555, 556
324682 J	RES RD1/4S 6.8 K OHM 1/4W	R549, 550
324103 J	RES RD1/4S 10K OHM 1/4W	R545, 546, 547, 548, 509, 510
324133 J	RES RD1/4S 12K OHM 1/4W	R511, 512
324153 J	RES RD1/4S 15K OHM 1/4W	R553, 554
324393 J	RES RD1/4S 39K OHM 1/4W	R517, 518
324823 J	RES RD1/4S 82K OHM 1/4W	R505, 506, 539, 540
324473 J	RES RD1/4S 47K OHM 1/4W	R822
324562 J	RES RD1/4S 5.6 K OHM 1/4W	R551, 552

Parts No.	Description	Symbol
324224 J	RES RD1/4S 220K OHM 1/4W	R503, 504, 507, 508 R531, 532, 543, 544
324394 J	RES RD1/4S 390K OHM 1/4W	R535, 536
324105 J	RES RD1/4S 1 M OHM 1/4W	R537, 538, 541, R515, 516
324332 V	RES RD1/4U 3.3K OHM 1/4W	R534
324472 V	RES RD1/4U 4.7K OHM 1/4W	R815
324473 V	RES RD1/4U 47K OHM 1/4W	R816
324104 V	RES RD1/4U 100K OHM 1/4W	R819
324184 J	RES RD1/4S 180K OHM 1/4W	R817
324564 V	RES RD1/4U 560K OHM 1/4W	R818, 821
324105 V	RES RD1/4U 1M OHM 1/4W	R542, 567, 568
324224 V	RES RD1/4U 220K OHM 1/4W	R569, 570
211505 Q	E-CAP 50R0.47 CE04W	C807
211513 Q	E-CAR 50R3.3 CE04W	C808, 515, 516, 529, 530
211220 Q	E-CAP 16R10 CE04W	C509, 510, 513, 514
211525 Q	E-CAP 50R47 CE04W	C805
211432 Q	E-CAP 35R220 CE04W	C806
215513 N	BP-CAP 50R3.3 CE04D	C527, 528
252405 M	T-CAP 35D0.47 CS15E	C501, 502
223331 J	S-CAP 330PF(±5%) CQ09S	C541, 542
222222 K	M-CAP 0.0022MF(±10%) CQ92M	C531, 532
222472 K	M-CAP 0.0047MF(±10%) CQ92M	C517, 518
222223 K	M-CAP 0.022MF(±10%) CQ92M	C534, 533
222103 K	M-CAP 0.01MF(±10%) CQ92M	C521, 522
222333 K	M-CAP 0.033MF(±10%) CQ92M	C523, 524
222473 K	M-CAP 0.047MF(±10%) CQ92M	C519, 520
222104 K	M-CAP 0.1MF(±10%) CQ92M	C529, 530
222224 K	M-CAP 0.22MF(±10%) CQ92M	C519, 520
232809 D	C-CAP 8PF(±0.5PF) SL	C507, 508
232100 K	C-CAP 10PF(±10%) SL	C517, 518
232101 K	C-CAP 100PF(±10%) SL	C525, 526
2322220 K	C-CAP 22PF(±10%) SL	C511, 512, 505, 506
232330 K	C-CAP 33PF(±10%) SL	C503, 504
	REG. SECTION	
502027 S	ZD RD15E	D804
514084 S	TR 2SA661 (O,Y)	Q801
515075 S	TR 2SC1166 (O.Y)	Q802
513056 S	TR 2SD235 (O.Y)	Q803
361101 S	MO-RES RSIS 100 OHM 1W	R811
361391 S	MO-RES RSIS 390 OHM 1W	R805, 809
708170 O	H-SINK(M) AL100P H12	

www.hifiengine.com

Parts No.	Description	Symbol	Parts No.	Description	Symbol
324150 J	RES RD1/4S 15 OHM 1/4W	R802			
324220 J	RES RD1/4S 22 OHM 1/4W	R814			
324121 J	RES RD1/4S 120 OHM 1/4W	R807			
324331 J	RES RD1/4S 330 OHM 1/4W	R806			
324332 J	RES RD1/4S 3.3K OHM 1/4W	R812			
324472 J	RES RD1/4S 4.7K OHM 1/4W	R804, 810, 803, 808			
324331 V	RES RD1/4U 330 OHM 1/4W	R801			
324561 J	RES RD1/4S 560 OHM 1/4W	R813			
324220 V	RES RD1/4U 22 OHM 1/4W	R824			
211232 Q	E-CAP 16R220 CE04W	C811			
211325 Q	E-CAP 25R47 CE04W	C802, 804			
211330 O	E-CAP 25R100 CE04W	C810			
211332 Q	E-CAP 25R220 CE04W	C801, 803			
215505 N	BP-CAP 50R0.47 CE04D	C820			

www.hifiengine.com

SEMICONDUCTOR SPECIFICATION

TRANSISTOR COMPLEMENT.

Type	Description ★Note	Class of Service	Maximum Ratings (T_A=25°C) (Absolute Values) Collector to Base Voltage V_{CBO} (V)	Emitter to Base Voltage V_{EBO} (V)	Collector Current I_C (mA)	Emitter Current I_E (mA)	Collector Dissipation P_C (mw)	Junction Temperature (°C)	Electrical Characteristics (Typical Value) T_A=25°C Condition of Measurement V_{CE} (V)	I_E (mA)	hfe (hFE)	NF (dB)	$f_{\alpha b}$ (fT) MHz	Cob pF	hie (real) Ω	Collector Cut-off Current I_{CBO} (max. μA)	V_{CB} (V)	Emitter Cut-off Current V_{EB} (max. μA)	V_{EB} (V)	Manufacture
2SC1342	NPN Si-P	RF AMP	30	20	30		100	125	6.0	1.0	35 ~200	MAX 8.5	MIN. 150	MAX 1.5		0.5	10			HITACHI
2SC1675	NPN Si-EP	RF AMP	50	5	30		250	125	6.0	1.0	90	2.0	250	1.9		0.1	50	0.1	5	NEC
2SC945	NPN Si-E	LOW FREQ. AMP	50	5	100		250	125	6.0	1.0	150	4.0	300	4.5		0.1	40	0.1	3	NEC
2SD235	NPN Si-D-J	Power Out put	50	10	3.0A		1.5W	150	5.0	500	80		1.0			100	20	100	5	TOSHIBA
2SA640	PNP Si-E	LOW FREQ. AMP	− 50	−5	−30		250	125	−3.0	−0.1	300	1.5	100	8.0		−0.1	− 40	−0.1	−3	NEC
2SC1222	NPN Si-E	LOW FREQ. AMP	50	5	30		250	125	3.0	0.1	320	1.5	100			0.05	25	0.1	3	NEC
2SA733	PNP Si-E	LOW FREQ. AMP	− 50	−5	−100		250	125	−6.0	−1.0	200	6.0	180	8.0		−0.1	− 40	−0.1	−5	NEC
2SA661	PNP Si-E	DRIVER STAGE AMP	− 60	−5	−200		600	150	−2.0	−50	100		100	9.0		−0.1	− 20	−0.1	−5	TOSHIBA
2SC1166	NPN Si-E	DRIVER STAGE AMP	60	5	200		600	150	2.0	50	100		120	9.0		0.1	20	0.1	5	TOSHIBA
2SD388	NPN Si-T-D	Power Out put	150	7	8A		80W	150	5.0	1A	80					100	100	100	5	NEC
2SB541	PNP Si-T-D	Power Out put	−110	−6	−8A		80W	150	−5.0	−1A	80					−100	−100	−500	−5	NEC
2SB536	PNP Si-E	Power Out put	−130	−5	−1.5A		20W	150	−5.0	−0.3A	110					−1.0	−120	−1.0	−3	NEC
2SD381	NPN Si-E	Power Out put	130	5	1.5A		20W	150	5.0	0.3A	110					1.0	120	1.0	3	NEC
2SC1628	NPN Si-T-D	DRIVER STAGE AMP	180	5	50		1.0W	150	5.0	10	120		120	5.0		1.0	100	1.0	5	TOSHIBA
2SA798	PNP Si EP	AF LOW NOISE AMP	− 50	−5	−100		200	125	−6.0	−1.0	600		100	3.0		−0.1	− 35	−0.1	−2	MITSUBISHI

★Note.
- Si-P; Silicon Planar Transistor
- Si-EP; Silicon Eptaxial Planar Transistor
- Si-D-J; Silicon Diffused Junction Transistor
- Si-E; Silicon Eptaxial Transistor
- Si-T-D; Silicon Triple Diffused Transistor

FIELD EFFECT TRANSISTOR COMPLEMENT.

Type	Description	Class of Service	Maximum Ratings B_{DSE} (V)	V_{GDO} (V)	I_D (mA)	P_T (mw)	T_{stg} (°C)	T_{ch} (°C)	Electrical Characteristics (Typical Value) T_A=25°C I_{GSS} Condition	(nA)	I_{DSS} Condition	(mA)	V_{GS} Condition	(V)	Y_{fs} Condition	(m℧)	Y_{OS} Condition	(m℧)	C_{RSS} Condition	(PF)	P_G Condition	(dB)	NF Condition	(dB)	Manufacture
3SK45	N-CH. MOS-FET	RF AMP	(V_{GS} −7 ~ +7)	(V_{DS} −0.2 ~ +22)	35	330	−65 ~ +175		V_{G1S}=±7V V_{DS}=0V V_{G2S}=0V V_{G2S}=±7V V_{DS}=0V V_{G1S}=0V	IG1SS 20 IG2SS 20	V_{DS}=15V V_{G2S}=4V V_{G1S}=0V	4 ~ 32	V_{DS}=15V V_{G2S}=4V I_D=100μA V_{DS}=15V V_{G1S}=0V I_D=100μA	V_{G1S} MAX −0.3 V_{G2S} MIN −2.0							V_{DD}=15V V_{G2S}=4V I_D=20mA f=200MHZ	MIN 17	V_{DD}=15V V_{G2S}=4V I_D=10mA f=200MHZ	MAX 3.3	HITACHI
3SK40	N-CH. MOS-FET	RF AMP	(V_{GS} −7 ~ +7)	(V_{DS} 20)	25	250	−65 ~ +150	150	V_{G1S}=±5V V_{DS}=0V V_{G2S}=0V V_{G2S}=±5V V_{DS}=0V V_{G1S}=0V	100 100	V_{DS}=10V V_{G1S}=0V V_{G2S}=4V	4 ~ 25	V_{DS}=15V V_{G2S}=0V I_D=100μA V_{DS}=15V V_{G1S}=0V I_D=100μA	V_{G1S} MAX −4V V_{G2S} MAX −4V							V_{DS}=15V I_D=5mA f=200MHZ	MIN 18	V_{DS}=15V I_D=5mA f=200MHZ	MAX 4.5	NEC
2SK30A	N-CH. J-FET	AF AMP		(V_{GDS} −50)		100	−55 ~ +125		V_{GS}=−30V V_{DS}=0V	−1.0	V_{DS}=10V V_{GS}=0V	0.3 ~ 6.5							V_{GD}=−10V V_{DS}=0V f=1MHZ	2.6			V_{DS}=15V V_{GS}=0V R_g=100KΩ f=120HZ	MAX 5.0	TOSHIBA

RECTIFIER, DIODE, ZENER-DIODE COMPLEMENT.

Type	Description	Maximum Ratings (T_A=25°C) Peak Inverse Voltage (V)	Dissipation (mw)	Out-put Current (mA)	Inverse Current (A)	Surge Current (A)	Junction Temperature (°C)	Electrical Characteristics (Typical Value) T_A=25°C Condition		Condition		Condition		Manufacture
S5188	Si RECTIFIER	200		11	MAX. 2mA (V_R=200V)	250	150							TOSHIBA
KB-265	Si VARISTER	6		30	10μA (V_R=6V)		110	I_F=3mA	V_F= 1.24V~ 1.38V	I_F=3mA	γF= −4mV/°C			KURAKE
1S188 FM-1	Ge. FM DETECTOR	35		50	MAX. 75μA (V_R=10V)	500mA	70	40MHz	γ= 50%	V_R=1V	C= 0.8pF			KURAKE
1S1885	Si RECTIFIER	100		1.0A (Ta=65°C)	MAX. 0.4 (V_R=100V)	60	150							TOSHIBA
RD33E	Si ZENER DIODE			400	V_R=25V 2μA		175	I_Z=5mA	V_Z= 31.0V~ 35.0V	I_Z=5mA	R_D= MAX 160Ω	I_Z=0.5mA	Z_{EK}= MAX 400Ω	NEC
RD15E	Si ZENER DIODE			400	V_R=11V 2μA		175	I_Z=10mA	V_Z= 13.8V~ 15.6V	I_Z=10mA	R_D= MAX 30Ω	I_Z=0.5mA	Z_{EK}= MAX 150Ω	NEC

www.hifiengine.com

INTEGRATED CIRCUIT COMPLEMENT

Type	Class of Service	Maximum Rating $T_A=25℃$						Electrical Characteristics (Typical Value) $T_A=25℃$							Manufacture
		Power Supply Vcc (V)	Power Dissipation Pd (mw)	Lamp Driver I_L (mA)	Input Voltage V_{IN} (V)	Operating Temp. Range Topt (℃)	Storage Temp. Range Tstg (℃)	Input Impedance Zin (KΩ)	Stereo Separation Sep (dB)	Channel Balance (dB)	Distortion (Stereo) (%)	SCA Rejection (dB)	Lamp Level (mV)	Output Voltage Vout (mV)	
HA1156W	FM STEREO DEMODULATOR	16	400	75	1.3	−20～+85	−55～+125	50	40 (at 1KHZ)	0.5	0.15 (at 1KHZ)	75	16	300	HITACHI

CONNECTION DIAGRAM(TOP VIEW)

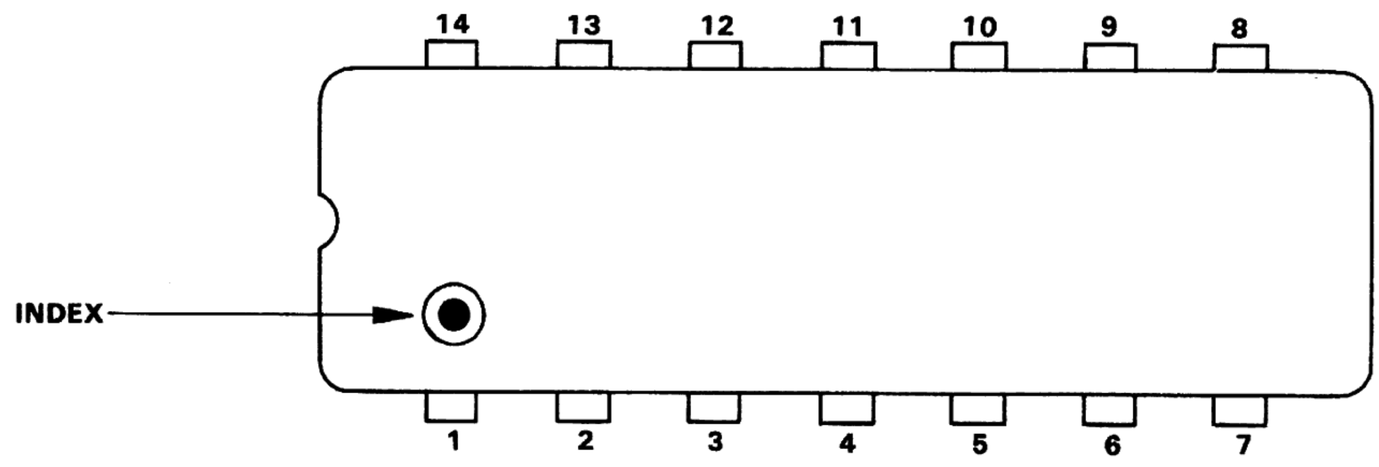

SCHEMATIC DIAGRAM

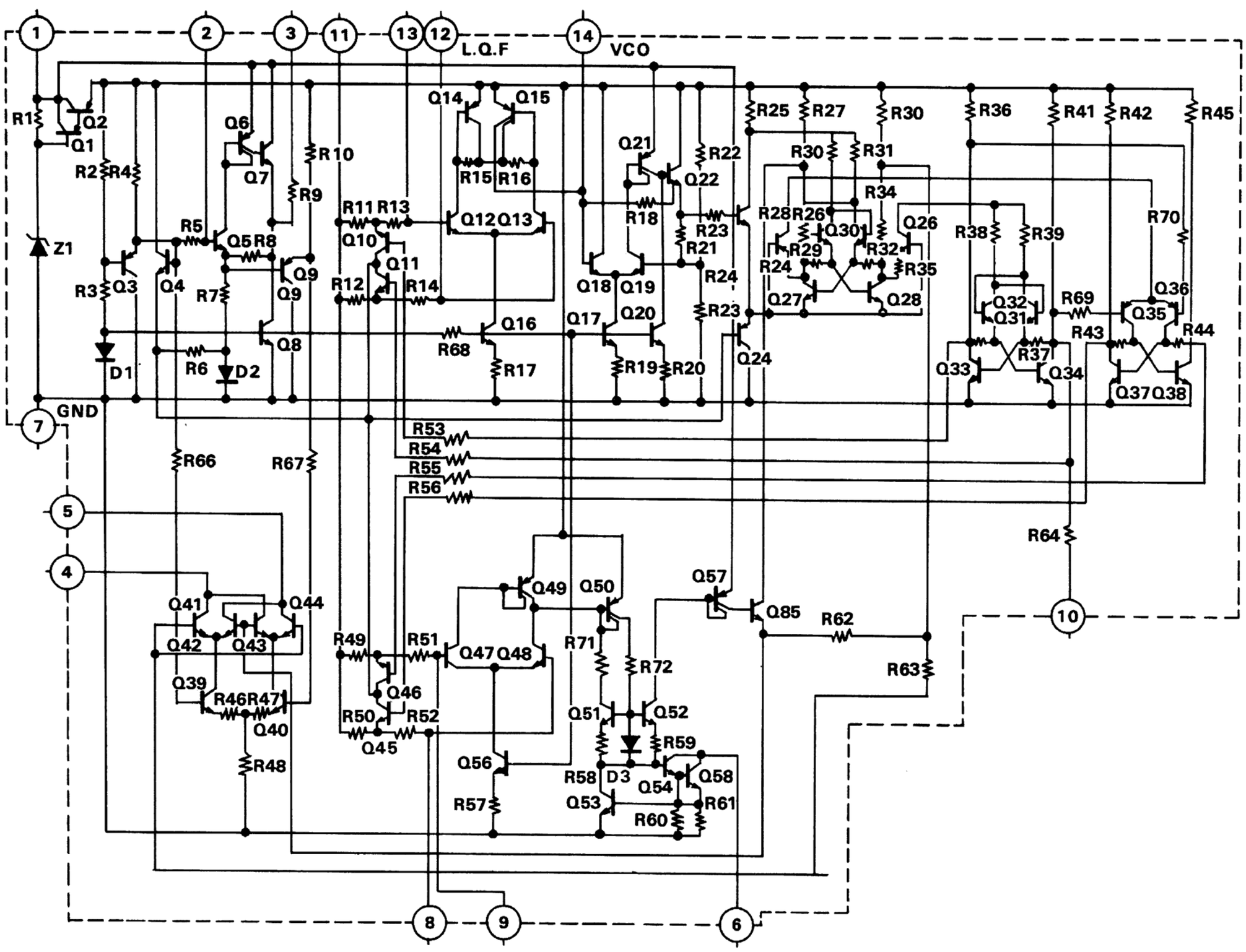

www.hifiengine.com

INTEGRATED CIRCUIT COMPLEMENT

Type	Class of Service	Maximum Rating $T_A=25℃$					Electrical Characteristics (Typical Value) $T_A=25℃$						Manufacture
		Power Supply Vcc (V)	Power Dissipation Pd (mw)	Input Voltage V_{IN} (V)	Operating Temp. Range Topt (℃)	Storage Temp. Range Tstg (℃)	Power Con-Sumption Vcc=13V (mA)	Input Limitting Sensitivity (μV)	Detector Output (mV)	Distortion (%)	Signai to Noise Ratio (dB)	AM Rejection Ratio (dB)	
HA1137W	FM-IF Quadrature-Detector Audio-Preamp.	14	550	1.9	−20∼+60	−55∼+125	32	15 (−3dB point)	300	0.1	MIN. 57	45	HITACHI

CONNECTION DIAGRAM (TOP VIEW)

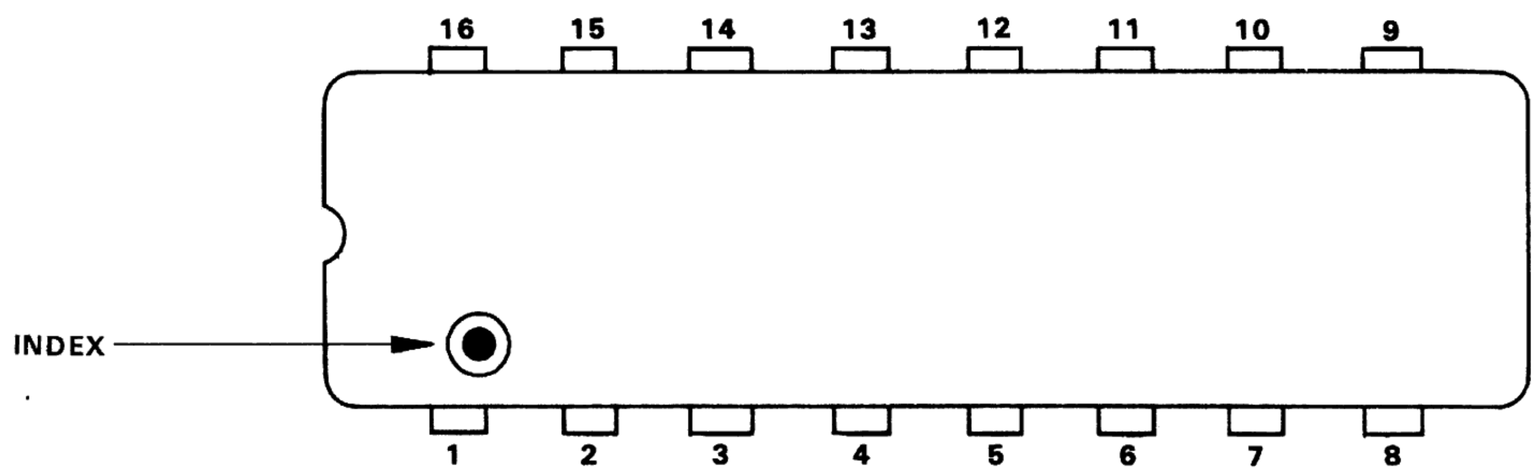

SCHEMATIC DIAGRAM

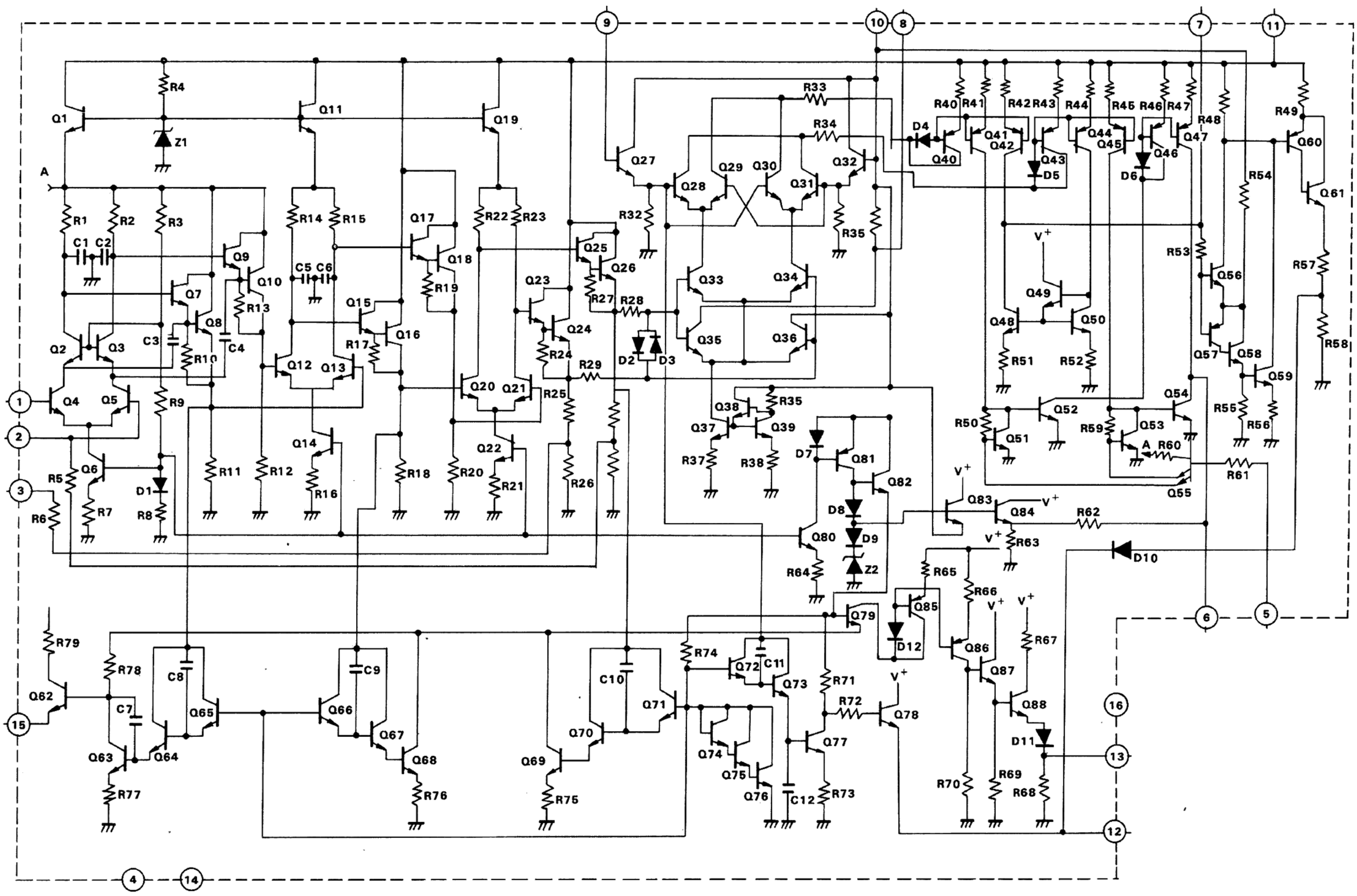

www.hifiengine.com

INTEGRATED CIRCUIT COMPLEMENT

Type	Class of Service	Maximum Rating $T_A=25℃$				Electrical Characteristics (Typical Value) $T_A=25℃$				Manufacture
		Power Supply Vcc (V)	Power Dissipation Pd (mw)	Operating Temp. Range Topt (℃)	Storage Temp. Range Tstg (℃)	Signal to Noise Ratio Input=74dB/m Mod.=30% (dB)	Distortion Input=74dB/m Mod.=30% (%)	Detector Output Input=74dB/m Mod.=30% (mV)	Power Consumption Vcc=12V (mA)	
HA1151	AM RADIO	18	500	−30～+70	−55～+125	46	1.0	170	13	HITACHI

CONNECTION DIAGRAM (TOP VIEW)

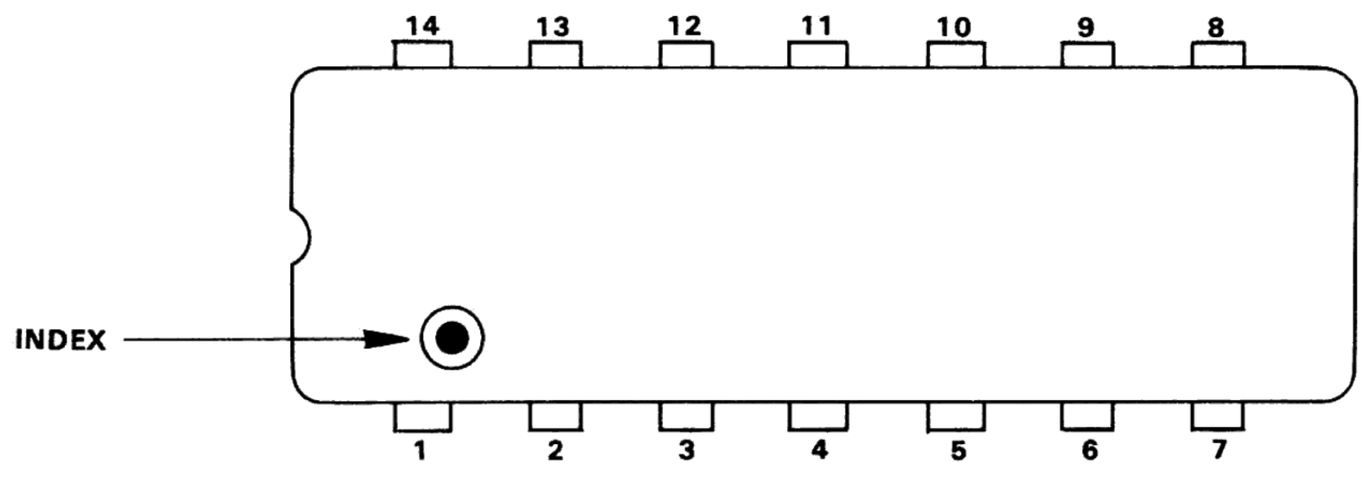

SCHEMATIC DIAGRAM

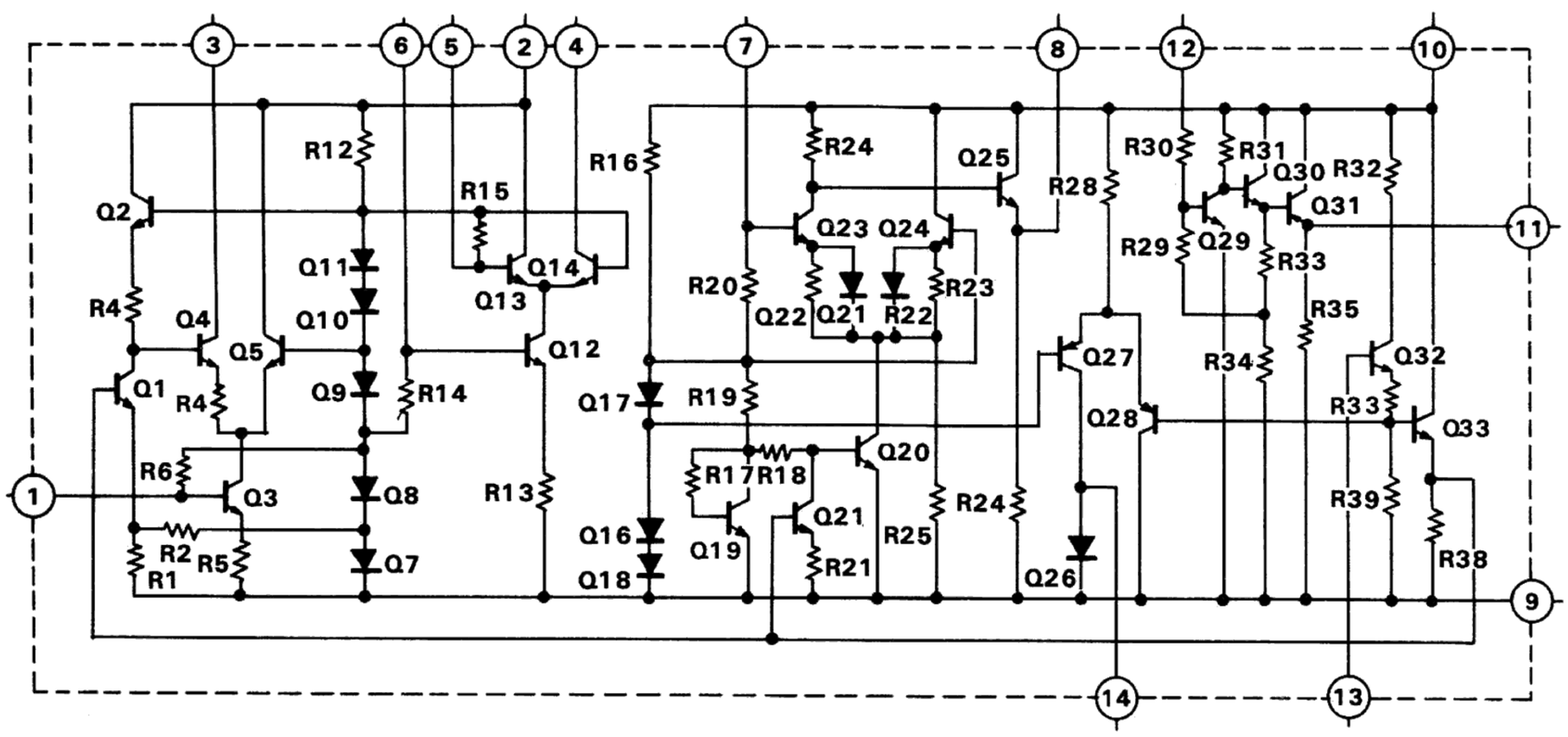

www.hifiengine.com

INTEGRATED CIRCUIT COMPLEMENT

Type	Class of Service	Maximum Ratings $T_A=25℃$				Electrical Characteristics (Typical Value) $T_A=25℃$				Manufacture
		Power Supply Vcc (V)	Power Dissipation Pd (mw)	Operating Temp. Range Topt (℃)	Storage Temp. Range Tstg (℃)	Gain (dB)	Maximum Output Voltage (V)	Power Consuption (mA)	Equivalent Input Noise Voltage (μV)	
TA7136P	Audio-Amplifier	40	400	−25～+75	−55～+125	MIN. 87	MIN. 7.0	MAX. 4.2	MAX. 1.5	TOSHIBA

CONNECTION DIAGRAM

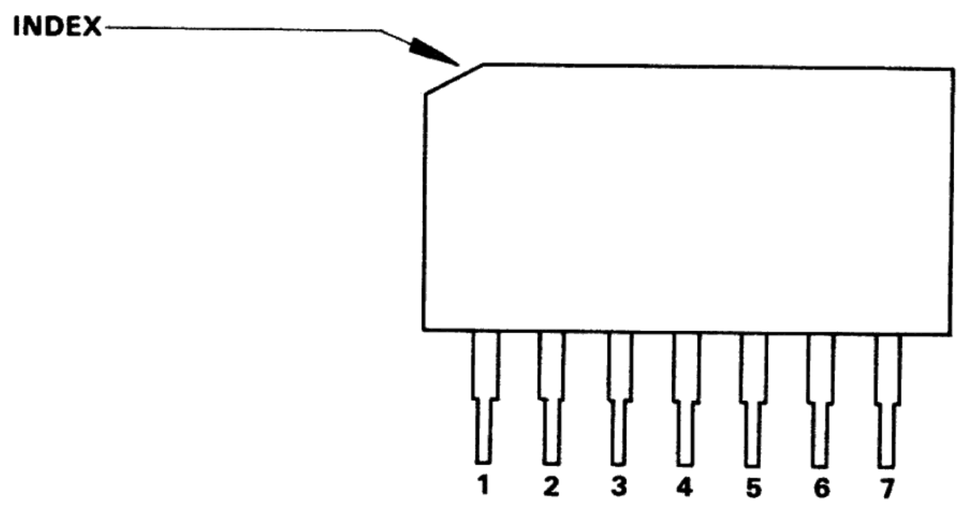

SCHEMATIC DIAGRAM

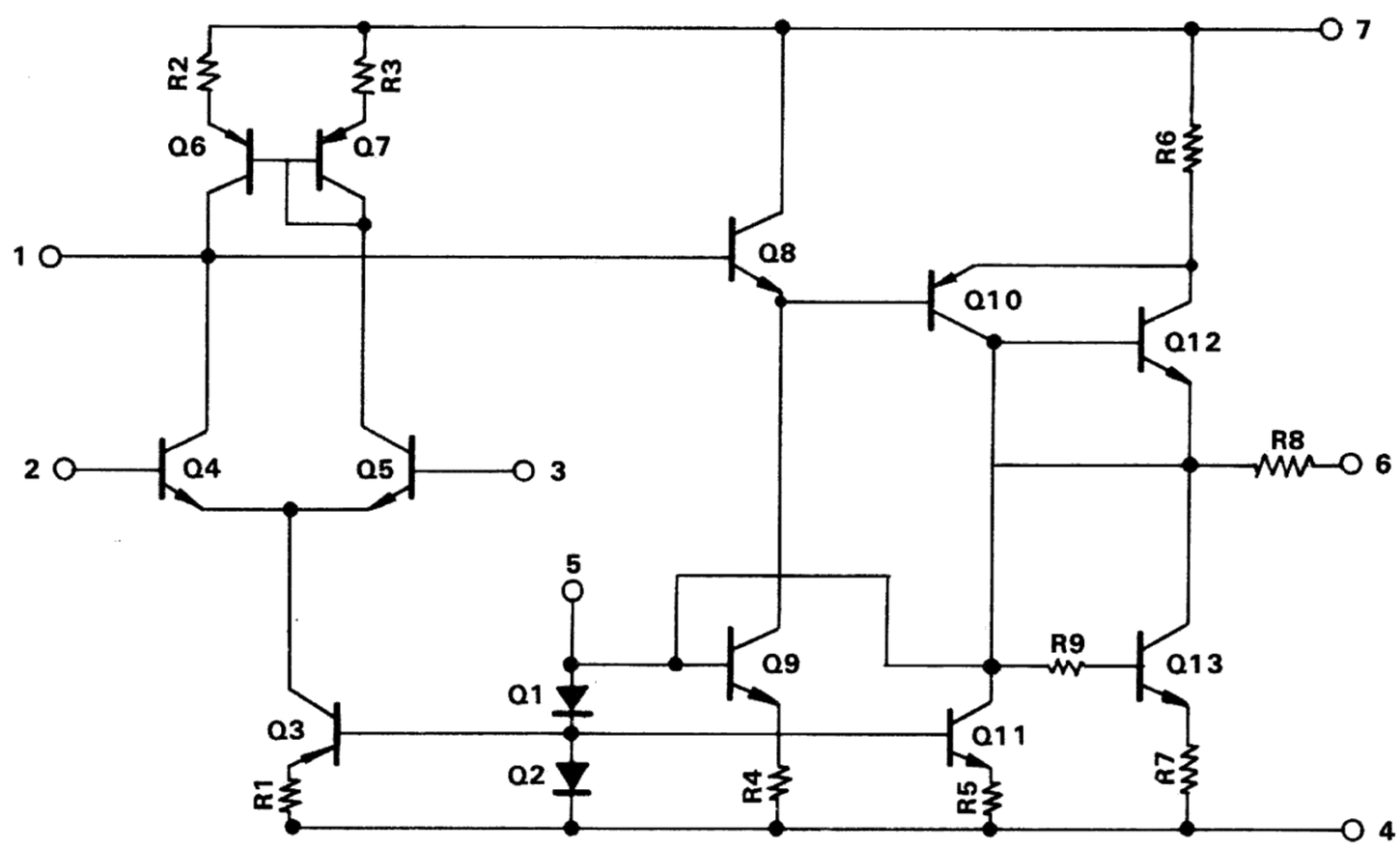

www.hifiengine.com

NIKKO ELECTRIC CORP. OF AMERICA
16270 RAYMER STREET
VAN NUYS CALIF. 91406 U.S.A.

NIKKO ELECTRIC CORP. OF AMERICA
218 SHERWOOD AVENUE
FARMINGDALE NEW YORK 11735, U.S.A.

NIKKO ELECTRIC MFG. CO., LTD.
4-1, 3-CHOME, OKUSAWA
SETAGAYA-KU, TOKYO, JAPAN

PRINTED IN JAPAN

965148E