NIKKO RECEIVER

NR-850
NR-1050

AM/FM STEREO RECEIVER





SERVICE MANUAL

CONTENTS

SAFETY INSTRUCTIONS 1
SPECIFICATIONS 2
DISASSEMBLY 3
ALIGNMENT ..... 4 ~ 7
PWB BOARD ..... 8 ~ 11
SCHEMATIC DIAGRAM NR-850 (W) 12, 13
SCHEMATIC DIAGRAM NR-1050 (W) 14, 15
BLOCK DIAGRAMS 16, 17
EXPLODED VIEWS 18, 19
PARTS LIST ..... 20 ~ 23
CIRCUIT DATA ..... 24 ~ 34

www.hifiengine.com

SAFETY INSTRUCTIONS

PRECAUTIONS DURING SERVICING

1. Parts identified by the ⚠ symbol parts are critical for safety. Replace only with same parts number specified.

2. Other parts and assemblies are specified to conform with such regulations as those applying to spurious radiation.

   These must also be replaced only with specified replacements.

   Examples: RF converters, tuner units, RF cables, noise blocking capacitors, noise blocking filters, etc.

3. Use specified internal wiring
   a) Primary leads
   b) Wires covered with PVC tubing
   c) Double insulated wire

4. Use specified insulating materials for hazardous live parts.
   a) Insulation Tape
   b) Insulated Barriers (Spacers)
   c) PVC tubing
   d) Plastic screws for fixing microswitch (Especially in turntable)
   e) Terminal strips

5. When replacing the primary components (transformer, power supply cord switch, by-pass capacitor, etc.), wrap ends of wires securely about the terminals before soldering.

   Where hand soldering is involved, a minimum spacing below between terminals of uninsulated live parts of primary or supply circuitry through air or over surface is to be maintained.

   120V appliance : 3mm spacing min.
   220V and 240V appliance : 6mm spacing min.

6. Observe that wires do not contact heat producing parts (heatsinks, oxide metal resistance, rectifiers, etc.)

7. Check that replaced wires do not contact sharp edges or pointed parts.

8. Do not leave electric conductive parts (screws, droplets, etc.) inside the appliance.

SAFETY RECHECK AFTER SERVICING

Confirm the specified insulation resistance between power plug prongs and externally exposed parts of the appliance is greater than 10Mohms, however, for equipment with external antenna terminals (tuner, receiver, etc.) specified insulation resistance should be more than 2.2Mohms (ground terminals, in-output jacks etc.).

www.hifiengine.com

SPECIFICATIONS

Amplifier Section

Continuous Power Output ..... 65 W + 65 W (NR-850)
105 W + 105 W (NR-1050)
Minimum RMS power per channel into 8 ohms from 20 Hz to 20 kHz at rated T.H.D., both channels driven.
Both Channels Driven at 1,000 Hz, 1% Distortion
4 ohms ..... 90 W + 90 W (NR-850)
120 W + 120 W (NR-1050)
Both Channels Driven at 1,000 Hz
8 ohms ..... 70 W + 70 W (NR-850)
115 W + 115 W (NR-1050)
Total Harmonic Distortion
At rated power into 8 ohms
no more than 0.05% (NR-850)
no more than 0.03% (NR-1050)
At rated power into 4 ohms
no more than 0.09% (NR-850)
no more than 0.06% (NR-1050)
Intermodulation Distortion
no more than 0.05% (NR-850)
no more than 0.03% (NR-1050)
Power Bandwidth (IHF) ..... 10 Hz — 50 kHz
Damping Factor (8 ohms) ..... more than 40
Input Sensitivity/Impedance
PHONO (MC) ... 0.25 mV/100 ohms (only NR-1050)
PHONO (MM) ..... 2.5 mV/50 kohms
CD/VIDEO 1 ..... 150 mV/40 kohms
TAPE 1, 2, VIDEO 2 ..... 150 mV/40 kohms
Signal-to-Noise Ratio (IHF-A network)
PHONO (MC) ..... 70 dB (only NR-1050)
PHONO (MM) ..... 88 dB
CD/VIDEO 1 ..... 100 dB
TAPE 1, 2, VIDEO 2 ..... 100 dB
PHONO Overload Level (1 kHz 0.1% T.H.D.)
MC ..... 10 mV (only NR-1050)
MM ..... 170 mV (NR-850)
120 mV (NR-1050)
Frequency Response (20 Hz to 20 kHz)
PHONO (RIAA) ..... ±0.5 dB
CD/VIDEO, TAPE ..... ±1.0 dB
Tone Controls
BASS ..... ±7.5 dB (70 Hz)
TREBLE ..... ±7.5 dB (10 kHz)
Output Level (TAPE REC) ..... 150 mV

FM Tuner Section

Usable Sensitivity (300 ohms) ..... 11.2 dBf/1.9 μV
50 dB Quieting Sensitivity
STEREO ..... 35 μV
MONO ..... 3.0 μV
Signal-to-Noise Ratio
STEREO ..... 60 dB
MONO ..... 70 dB
Total Harmonic Distortion
STEREO 0.2%
MONO 0.1%
Frequency Response
50Hz to 15kHz ..... +0.5 dB, −1.0 dB
Capture Ratio ..... 1.5 dB
Alternate Channel Selectivity ..... 60 dB
Spurious Response Ratio ..... 70 dB
Image Response Ratio ..... 75 dB
IF Rejection Ratio ..... 80 dB
AM Suppression Ratio ..... 60 dB
Stereo Separation
1 kHz ..... 50 dB
50 Hz to 10 kHz ..... 40 dB
Sub-Carrier Suppression ..... 65 dB
Antenna Impedance ..... 75 ohms and 300 ohms

AM Tuner Section

Usable Sensitivity ..... 350 μV
Selectivity ..... 30 dB
Signal-to-Noise Ratio ..... 50 dB
Image Rejection ..... 40 dB
IF Rejection ..... 40 dB
Total Harmonic Distortion 0.5%

General

Power Requirement
U.S.A. & Canada ..... AC 120 V, 60 Hz
Europe ..... AC 220 V, 50 Hz
Power Consumption
CSA Standard ..... 320 W, 400 VA (NR-850)
420 W, 530 VA (NR-1050)
IEC Standard ..... 460 W (NR-850)
680 W (NR-1050)
Dimensions ..... 440(W)x110(H)x375(D) mm
(17-1/4"x4-1/4"x14-3/4")
Weight (excl.package) ..... 10 kg (22.4 lbs) (NR-850)
12 kg (26.9 lbs) (NR-1050)

* Specifications are subject to change without notice.

www.hifiengine.com

DISASSEMBLY

TOP COVER REMOVAL

1. Remove two black screws from the rear of the main unit.
2. Remove 6 screws from the cover (three from each side).
3. Lift the cover away from the unit.

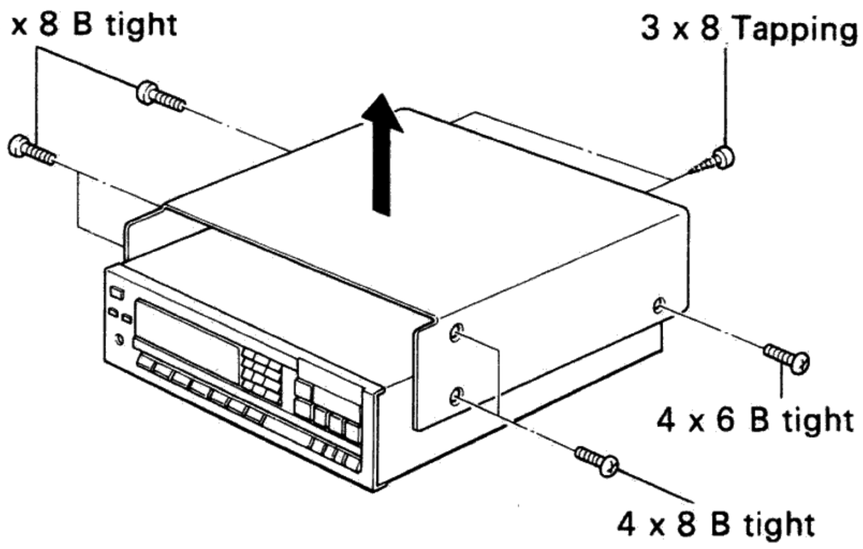

BOTTOM PLATE REMOVAL

1. Remove 15 screws from the bottom of the unit.
2. Remove the bottom plate.

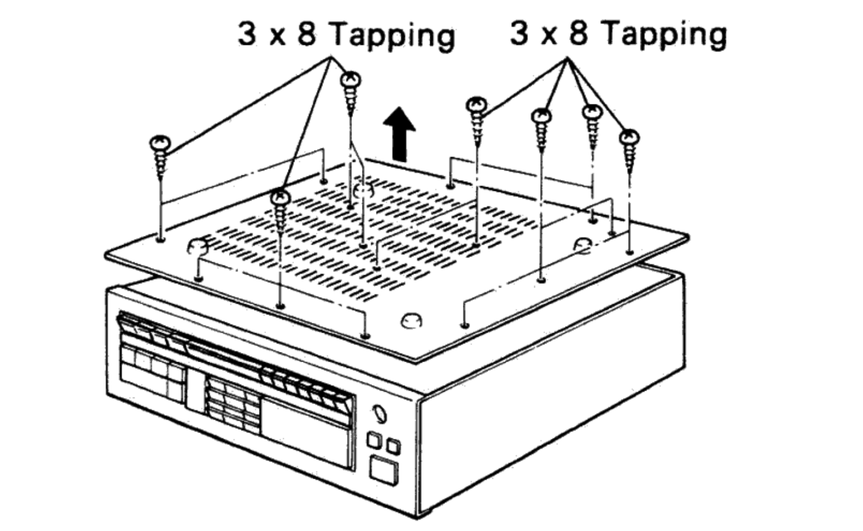

TRANSFORMER REMOVAL

1. Remove the top cover.
2. Disconnect wires running from the transformer.
3. Remove 4 screws that are holding the transformer in place.
4. Remove the transformer by lifting it up.

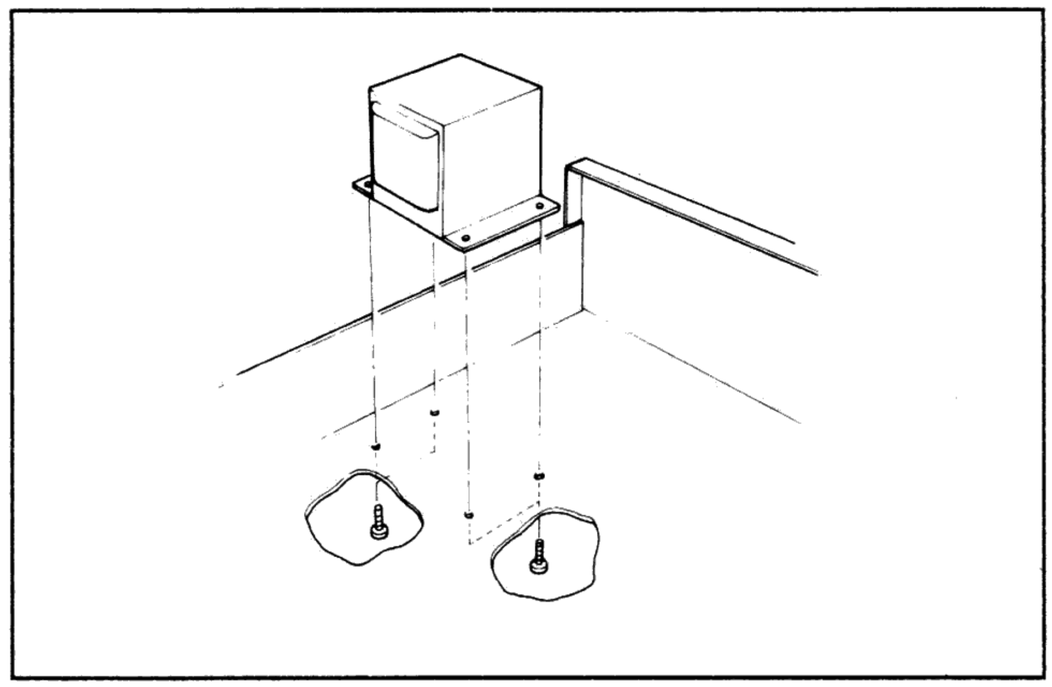

BACK PLATE REMOVAL

1. Remove the top cover.
2. Separate the AC cord from the main unit.
3. Remove the leads attached to the AC socket.
4. Remove 3 screws from the antenna terminal.
5. Remove 7 screws from the pin jack and speaker terminal.
6. Remove 10 screws from the back plate.
7. Remove 2 screws from the bottom of the back plate.
8. Detach the back plate from the main unit by pulling it towards you.

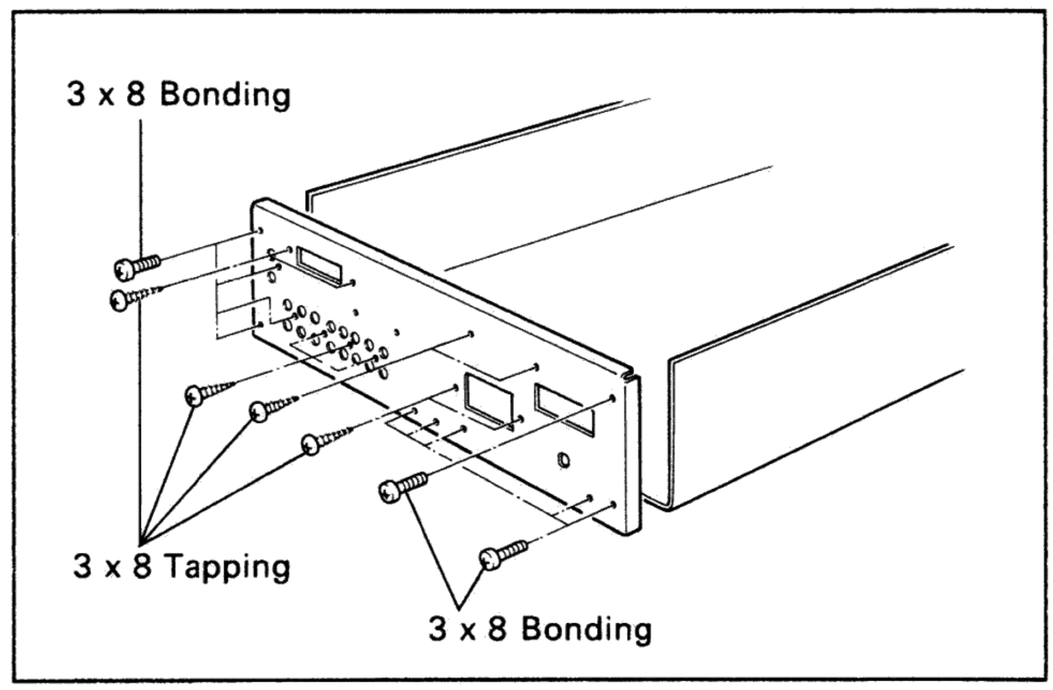

www.hifiengine.com

ALIGNMENT

TEST EQUIPMENTS

FM Signal Generator (FM SG)
Oscilloscope
AC Voltmeter
Distortion Meter
MPX Signal Generator (MPX SG)
Frequency Counter
AM Sweep Generator (AM SG)
DC Voltmeter

GENERAL ALIGNMENT INSTRUCTIONS

1. Always observe response curve on oscilloscope during alignment procedure.
2. Do not apply signals from FM or AM broadcast stations. Apply signals from generators only.
3. Use of excessive signal from FM SG or AM SG can cause overloading of the tuner circuits. To properly align the tuner, adjust FM SG or AM SG output level control so that response curve on oscilloscope is not distorted.
4. Input signal levels shown in the tables are measured at the antenna terminals of the tuner.
5. Allows a minimum of 10 minutes warm-up for test equipments and the tuner to be tested.

FM SECTION

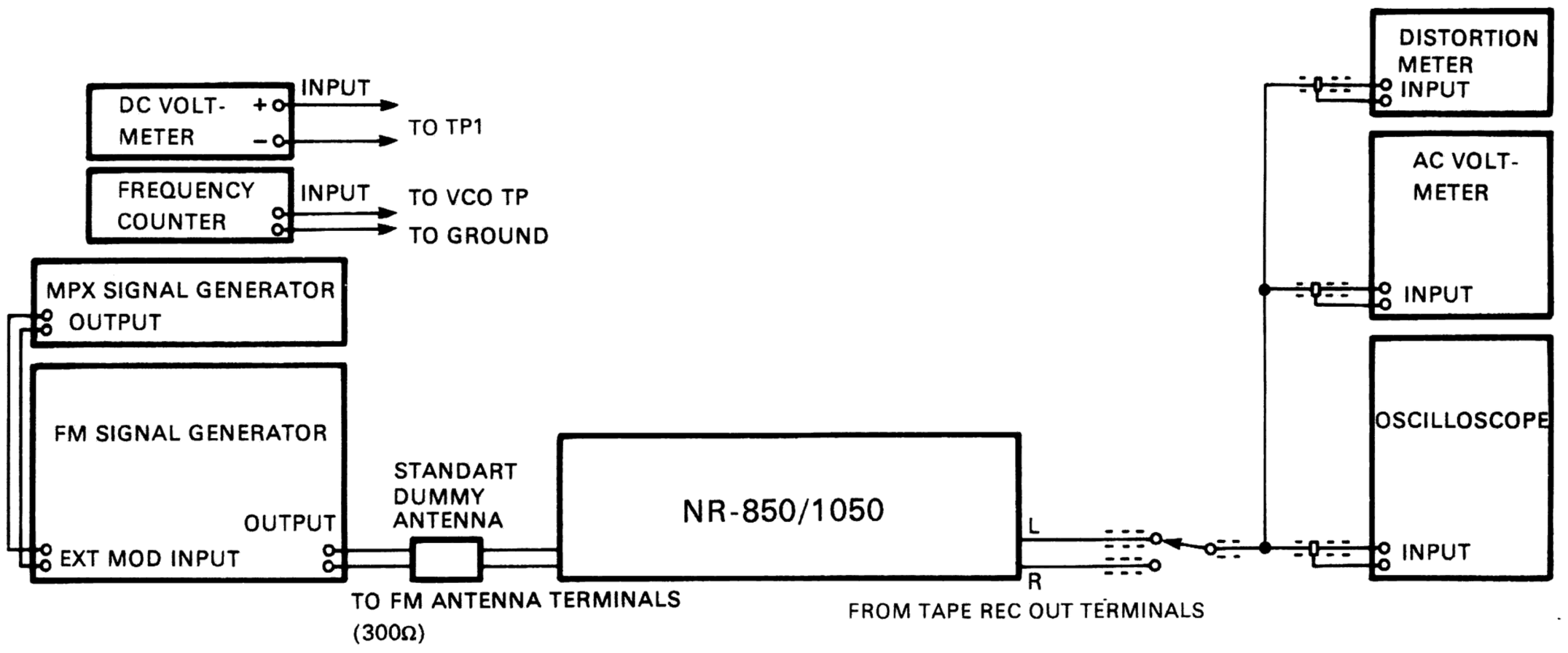

Figure 1 Test Equipment Hook-up

FM IF Alignment

STEP	FM SG FREQUENCY/ CALIBRATION	MODULATING FREQUENCY/ DEVIATION	SWITCHES OF THE RECEIVER	FREQUENCY DISPLAY	TEST POINT	ADJUST-MENT POINT	PROCEDURE	REMARKS
1	98.1 MHz/ 60 dBμ		A. POWER to "ON". B. SELECTOR to "FM".	When no signal is tuned.	TP1	Primary core of T101	Adjust until DC voltmeter indicates zero volt.	Repeat step 1 and 2 until distortion can no longer be minimized.
2		400 Hz/mono		98.1MHz	OUTPUT JACKS (L or R)	Secondary core of T101	Adjust for minimum distortion	

FM Muting Alignment

STEP	FM SG FREQUENCY/ CALIBRATION	MODULATING FREQUENCY/ DEVIATION	SWITCHES OF THE RECEIVER	FREQUENCY DISPLAY	TEST POINT	ADJUST-MENT POINT	PROCEDURE	REMARKS
1	98.1 MHz/ 30 dBμ	400 Hz/mono	A. POWER to "ON". B. SELECTOR to "FM".	98.1 MHz	OUTPUT JACKS (L or R)	HVR101	Adjust so that signals disappear or barely showing.	

www.hifiengine.com

Signal Alignment

STEP	FM SG FREQUENCY/ CALIBRATION	MODULATING FREQUENCY/ DEVIATION	SWITCHES OF THE RECEIVER	FREQUENCY DISPLAY	TEST POINT	ADJUST-MENT POINT	PROCEDURE	REMARKS
1	98.1 MHz/ 55 dBμ	400 Hz/mono	A. POWER to "ON". B. SELECTOR to "FM".	98.1 MHz	LED Display	HVR102	Adjust so that max. LED indi-cation is reached.	

FM MPX Alignment

STEP	FM SG FREQUENCY/ CALIBRATION	MODULATING FREQUENCY/ DEVIATION	SWITCHES OF THE RECEIVER	FREQUENCY DISPLAY	TEST POINT	ADJUST-MENT POINT	PROCEDURE	REMARKS
1	98.1 MHz/ 60 dBμ	1 kHz/stereo	A. POWER to "ON". B. SELECTOR to "FM".	98.1 MHz	OUTPUT JACKS (L and R)	HVR301	Adjust so that separation is at max.	

AM SECTION

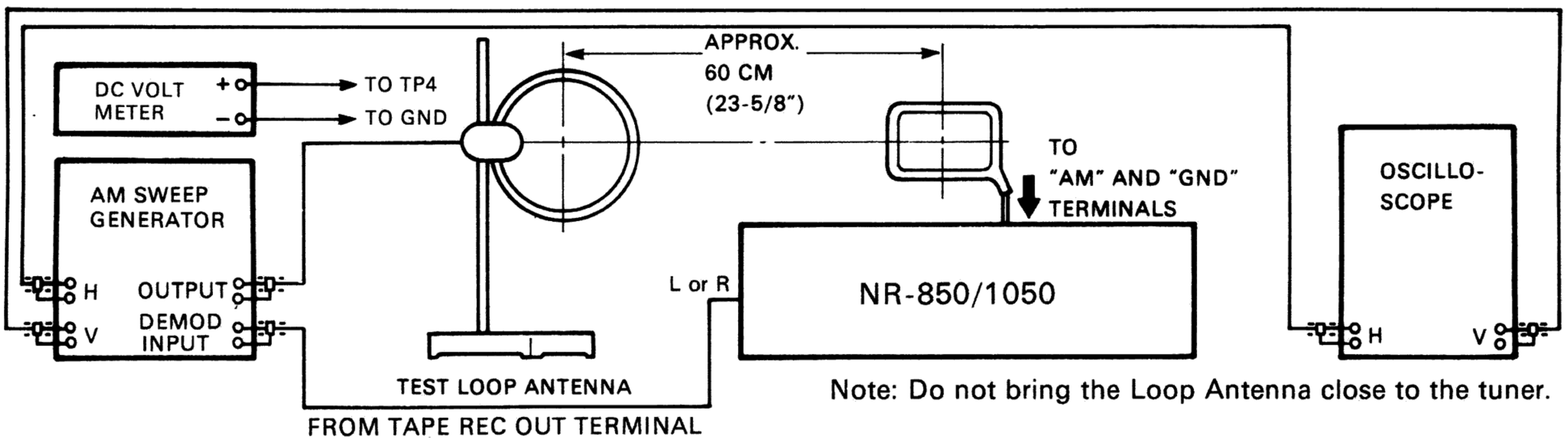

Figure 2 Test Equipment Hook-up

AM-IF Alignment

STEP	AM SG FREQUENCY/ CALIBRATION	MODULATING FREQUENCY/ MODULATION	SWITCHES OF THE RECEIVER	FREQUENCY DISPLAY	TEST POINT	ADJUSTMENT POINT FOR MAX. SCOPE INDICATION	REMARKS
1	Set IF/PF switch of AM SG to "IF" position. 450kHz, 50 dB/m	(Unmodulated carrier)	A. POWER to "ON". B. SELECTOR to "AM".	1610kHz/W-Type 1611kHz/E-Type	OUTPUT JACKS (L or R)	T202 T203	Best IF waves should be ob-tained.

Signal-strength Display Circuit Adjustment

STEP	AM SG FREQUENCY/ CALIBRATION	MODULATING FREQUENCY/ MODULATION	SWITCHES OF THE RECEIVER	FREQUENCY DISPLAY	TEST POINT	ADJUSTMENT POINT FOR MAX. SCOPE INDICATION	REMARKS
1	1000kHz, 60 dB/m (W-Type) 999kHz, 60 dB/m (E-Type)	400Hz/30%	A. POWER to "ON". B. SELECTOR to "AM".	1000kHz/W-Type 999kHz/E-Type	LED display	HVR 201	Max. LED indication should be reached.

www.hifiengine.com

AM Frequency Coverage Alignment

STEP	SWITCHES OF THE TUNER	FREQUENCY DISPLAY	TEST POINT	ADJUSTMENT POINT	PROCEDURE	REMARKS
1	A. POWER to "ON". B. SELECTOR to "AM".	1610kHz/W-Type 1611kHz/E-Type	TP3	TC202	Adjust until DC voltmeter indicates approx. 23 V.	Repeat steps 1 and 2 several times and finally adjust the voltages to 23 V ±100 mV at the highest frequency and 2.3 V ±50 mV at the lowest frequency.
2		530kHz/W-Type 522kHz/E-Type		T204	Adjust until DC voltmeter indicates approx. 2.3 V.	

NOTE: Apply no signal AM SG.

AM Tracking Alignment

STEP	AM SG FREQUENCY/ CALIBRATION		MODULATING FREQUENCY/ MODULATION	SWITCHES ON THE RECEIVER	FREQUENCY DISPLAY	TEST POINT	ADJUSTMENT POINT FOR MAX. SCOPE INDICATION	REMARKS
1	600kHz, 50 dB/m (W-Type) 603kHz, 50 dB/m (E-Type)	Set IF/RF switch of AM SG to "RF" position.	400Hz/30%	A. POWER to "ON". B. SELECTOR to "AM".	600kHz/W-Type 603kHz/E-Type	Output JACKS (L or R)	T201	Repeat steps 1 and 2 several times.
2	1400kHz, 50 dB/m (W-Type) 1404kHz, 50 dB/m (E-Type)				1400kHz/W-Type 1404kHz/E-Type		TC201	

NOTE: To check tracking errors, use an apparatus made of ferrite rod and copper wire (See Figure). Move it toward the AM loop antenna gradually, while checking for the response curve on oscilloscope becoming smaller. If the response curve becomes larger, repeat steps 1 and 2 (See Figure).

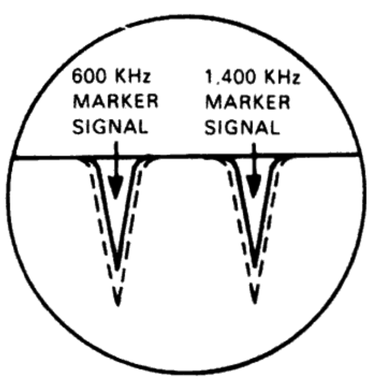

Figure 3 AM Tracking

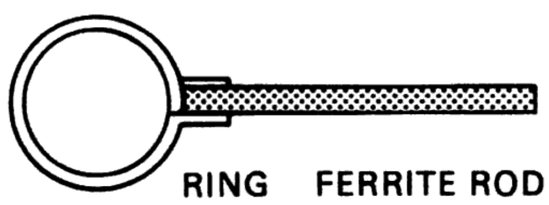

Figure 4 Apparatus

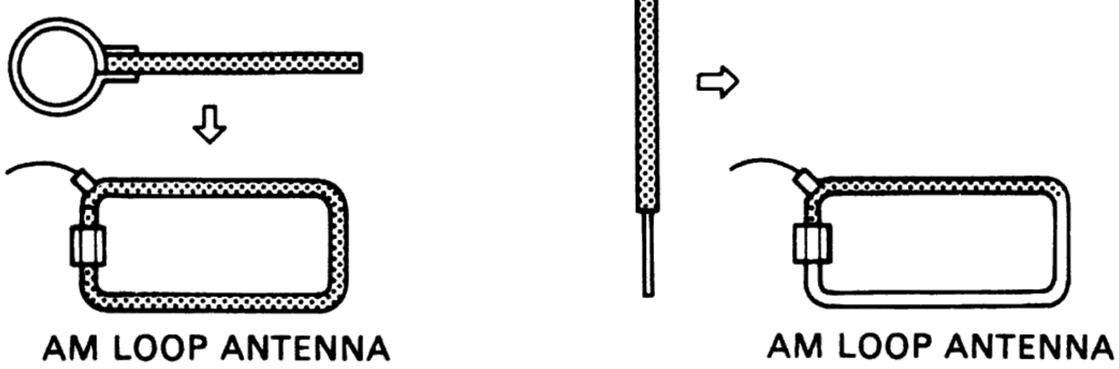

Figure 5 Tracking Errors

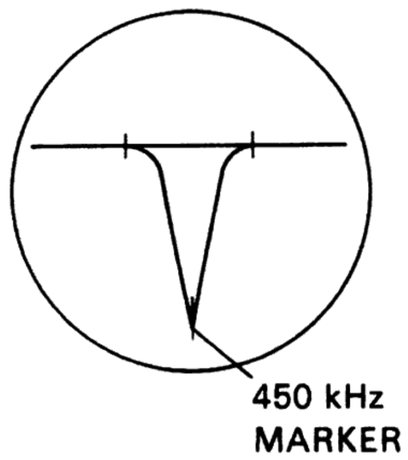

Figure 6 AM IF

www.hifiengine.com

Adjustment Points

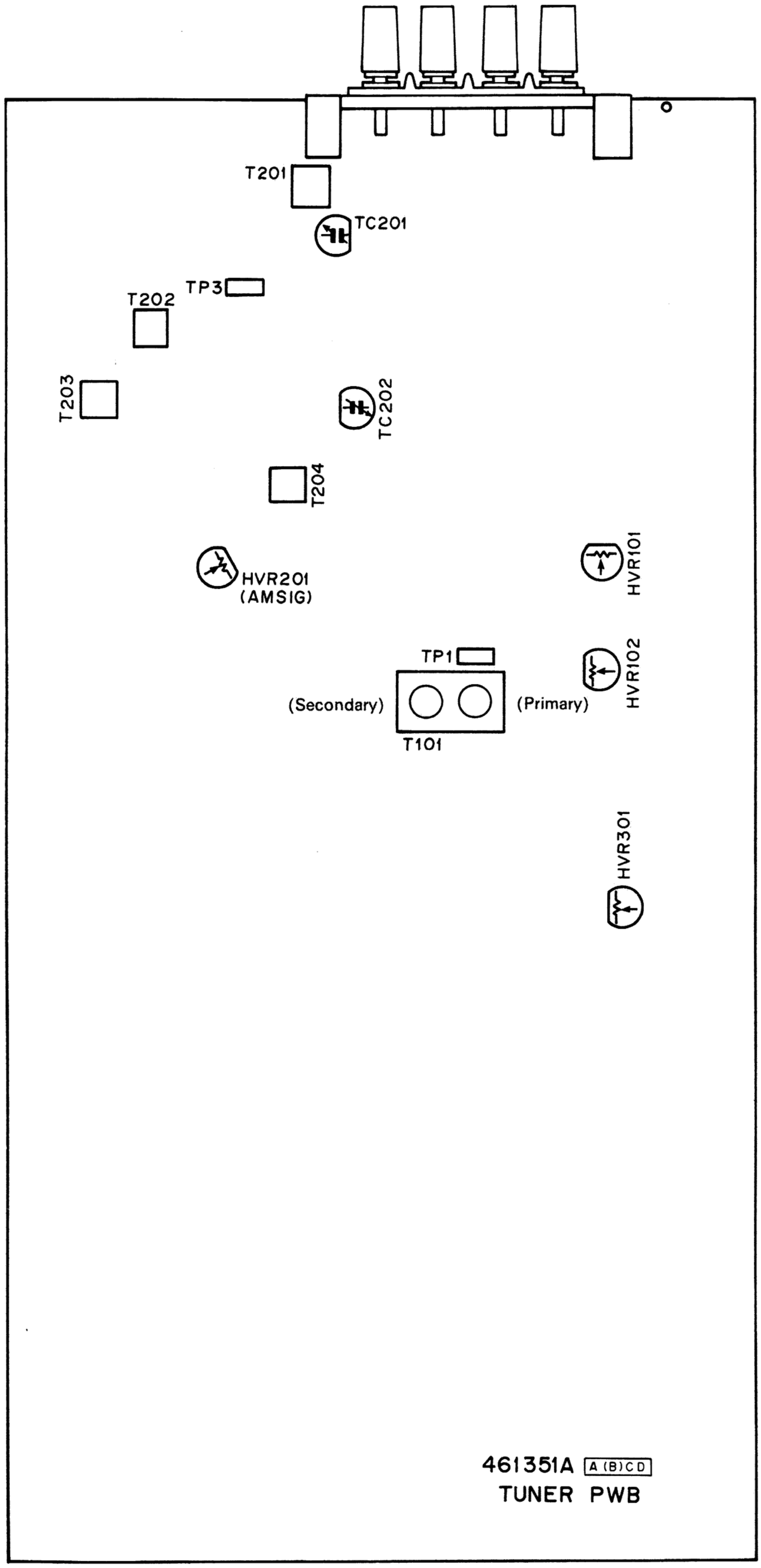

461351A A(B)CD
TUNER PWB

www.hifiengine.com

PWB BOARD

MAIN AMP PWB

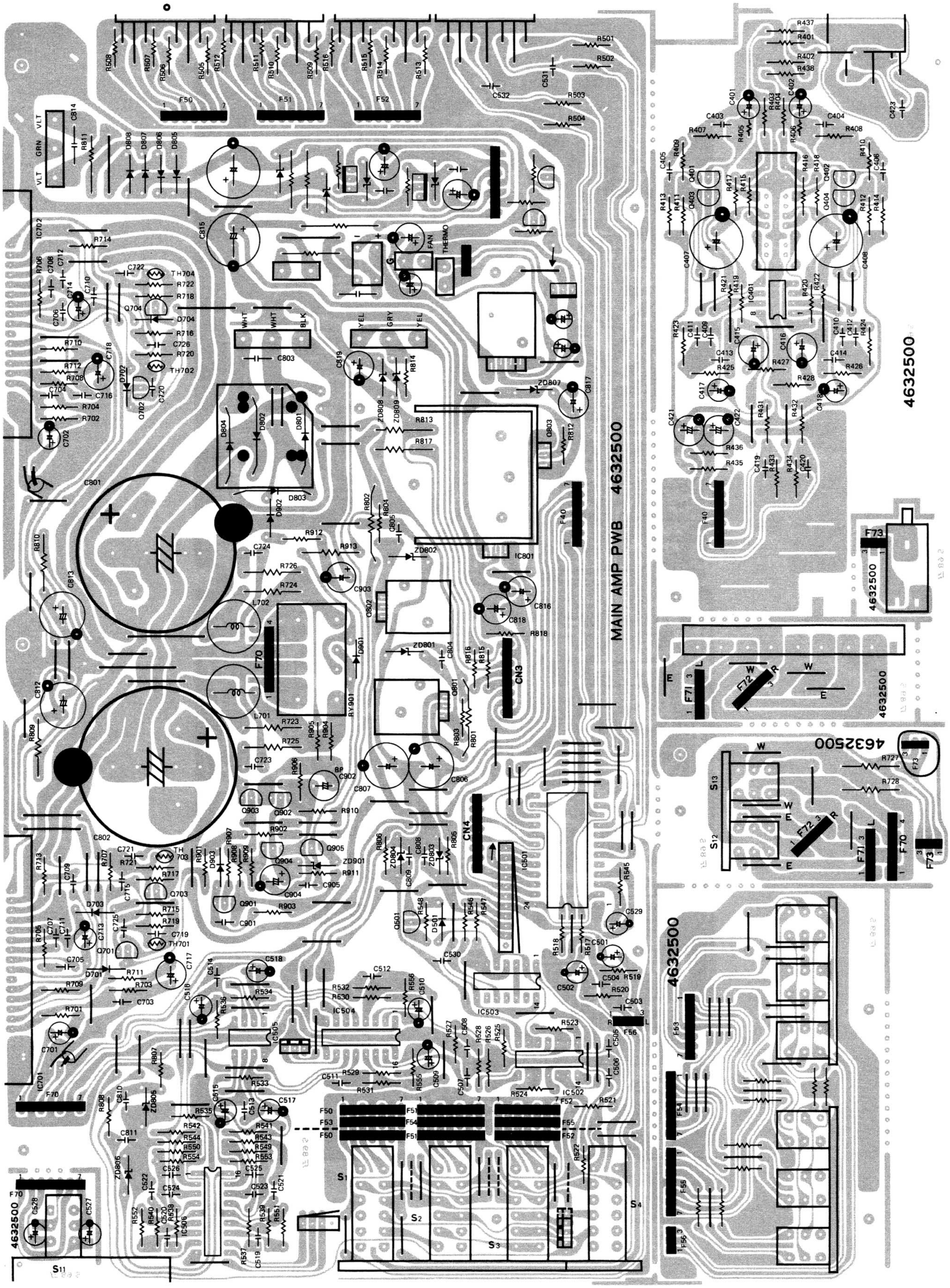
MAIN AMP PWB 4632500
4632500
4632500

TUNER PWB

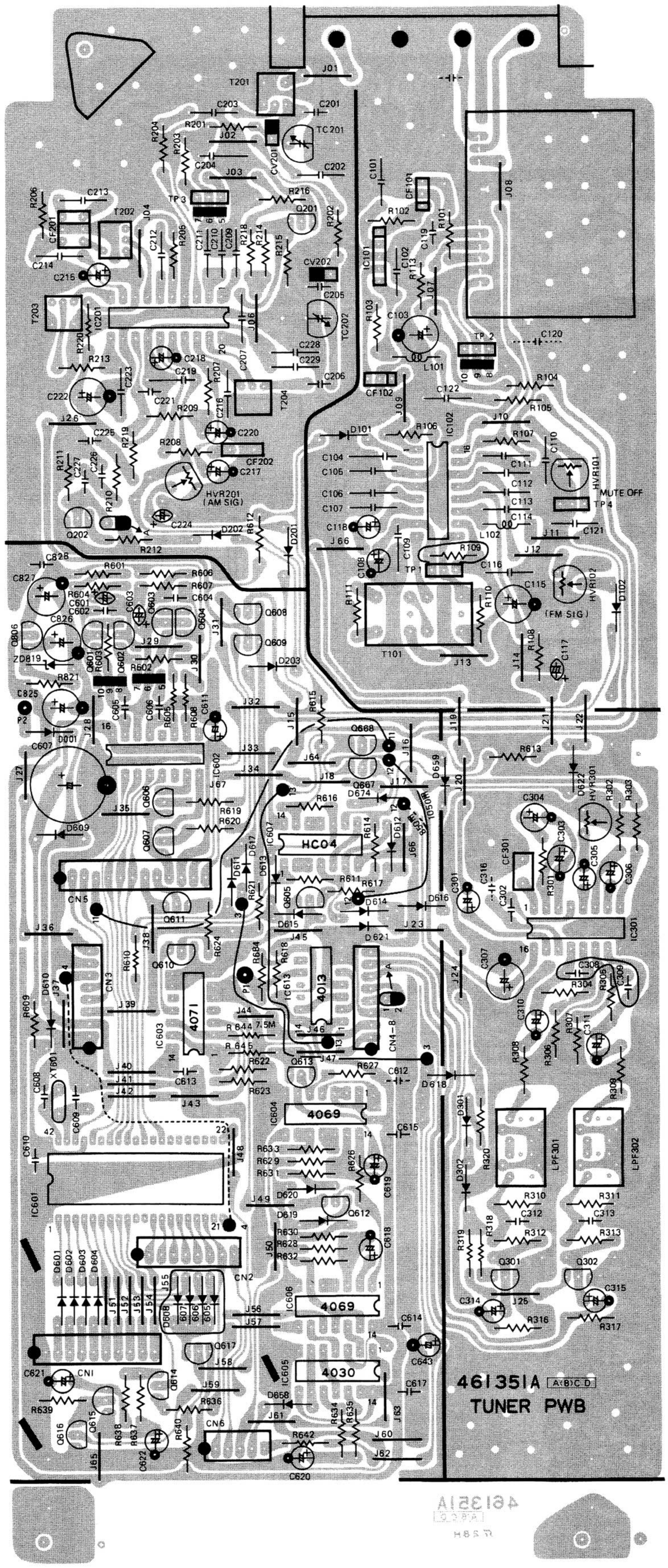
4613514 A(B)C D
TUNER PWB
MUTE OFF
(AM SIG)
(FM SIG)
HC04
4071
4013
4069
4069
4030

DISPLAY PWB

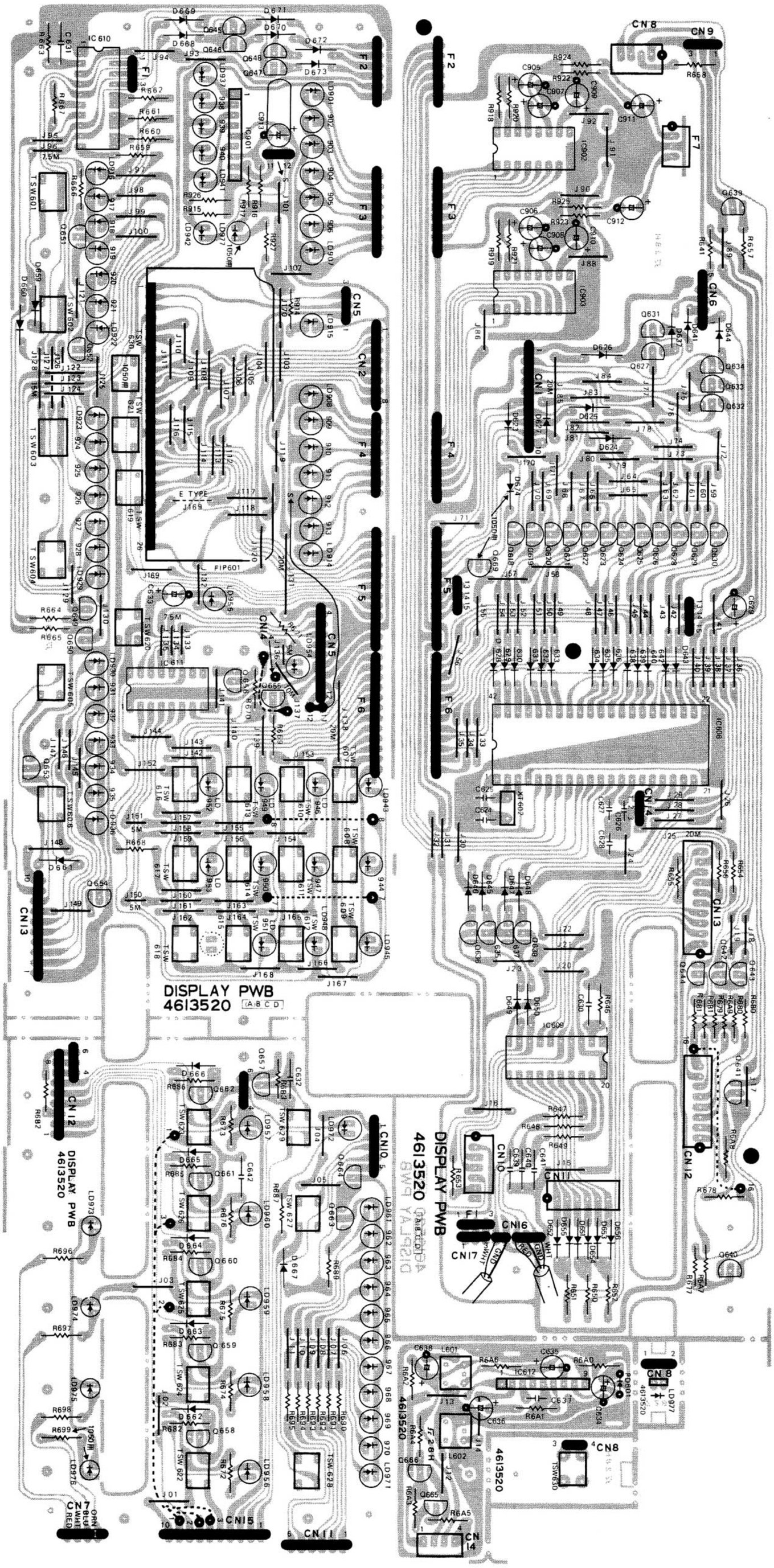
DISPLAY PWB
4613520 (A,B,C,D)
IC610
IC609
IC608
IC612
IC611
CN1
CN2
CN3
CN4
CN5
CN6
CN7
CN8
CN9
CN10
CN11
CN12
CN13
CN14
CN15
CN16
CN17
FIP601
E TYPE
J169
F1
F2
F3
F4
F5
F6
F7
TSW601
TSW602
TSW603
TSW604
TSW605
TSW606
TSW620
TSW621
TSW622
TSW623
TSW624
TSW625
TSW626
TSW627
TSW628
TSW629
TSW630
TSW631
TSW632
TSW633
TSW634
TSW635
TSW636
TSW637
TSW638
TSW639
TSW640
TSW641
TSW642
TSW643
TSW644
TSW645
TSW646
TSW647
TSW648
TSW649
TSW650
TSW651
TSW652
TSW653
TSW654
TSW655
TSW656
TSW657
TSW658
TSW659

POWER SW PWB

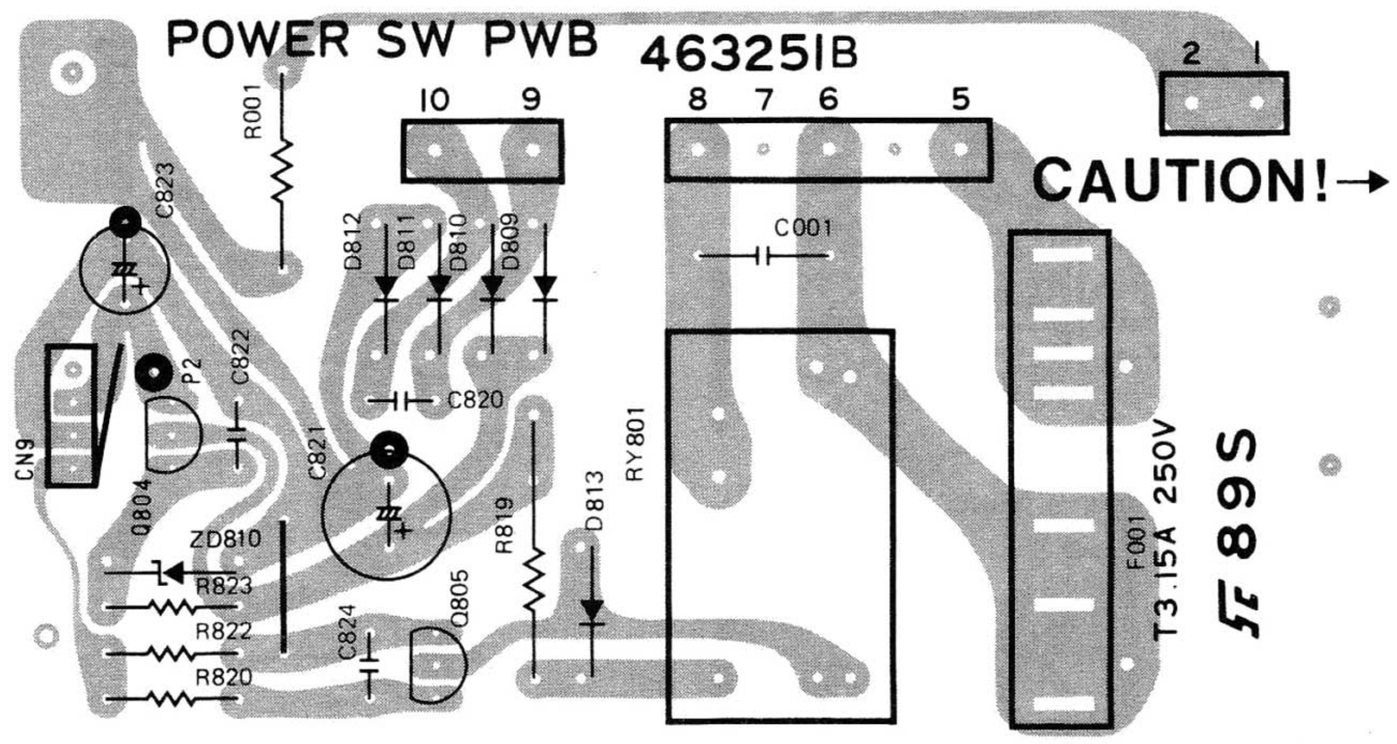

SCHEMATIC DIAGRAM NR-850/1050 (E)

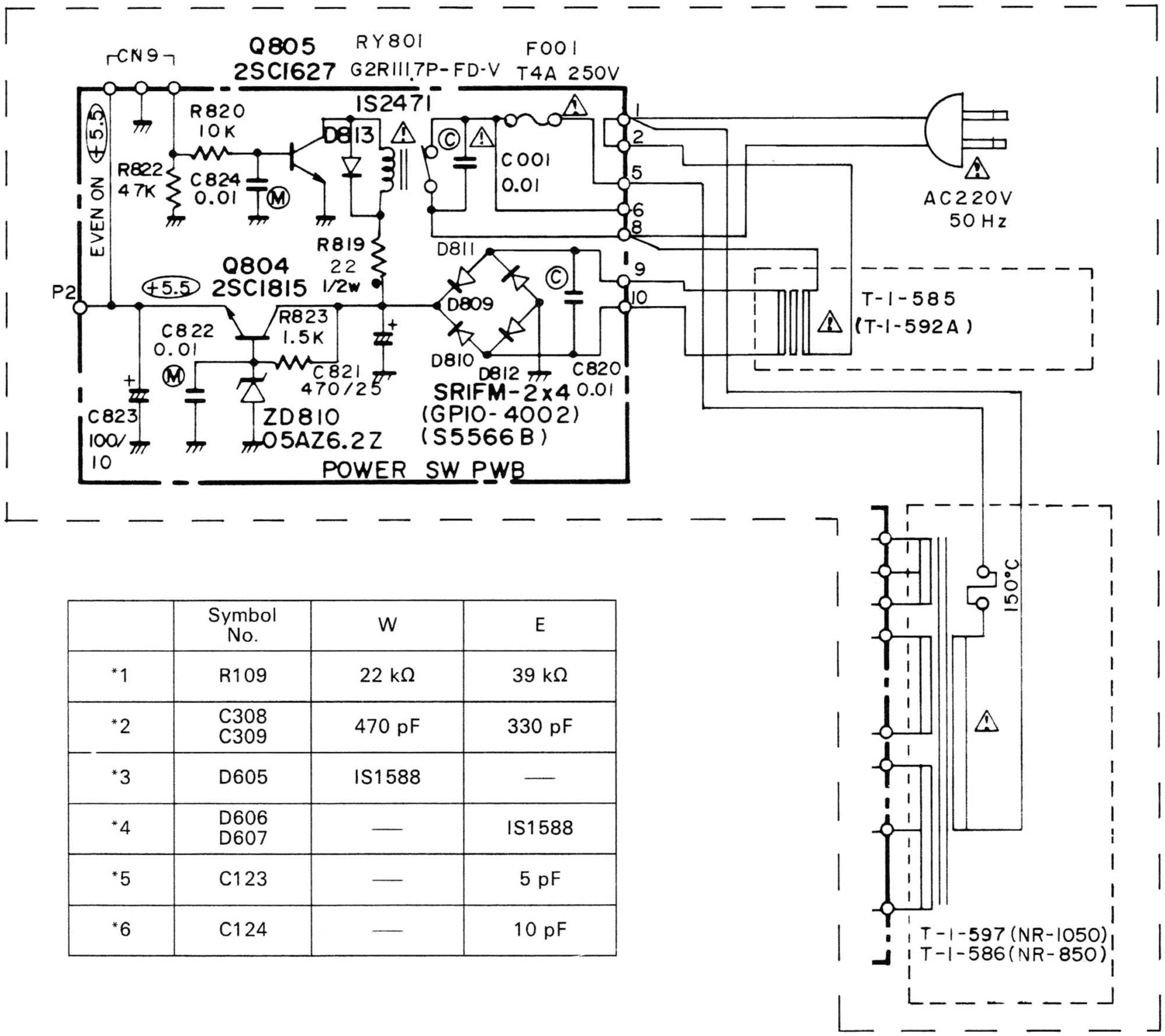

	Symbol No.	W	E
*1	R109	22 kΩ	39 kΩ
*2	C308 C309	470 pF	330 pF
*3	D605	IS1588	—
*4	D606 D607	—	IS1588
*5	C123	—	5 pF
*6	C124	—	10 pF

www.hifiengine.com

SCHEMATIC DIAGRAN NR-850 (W)

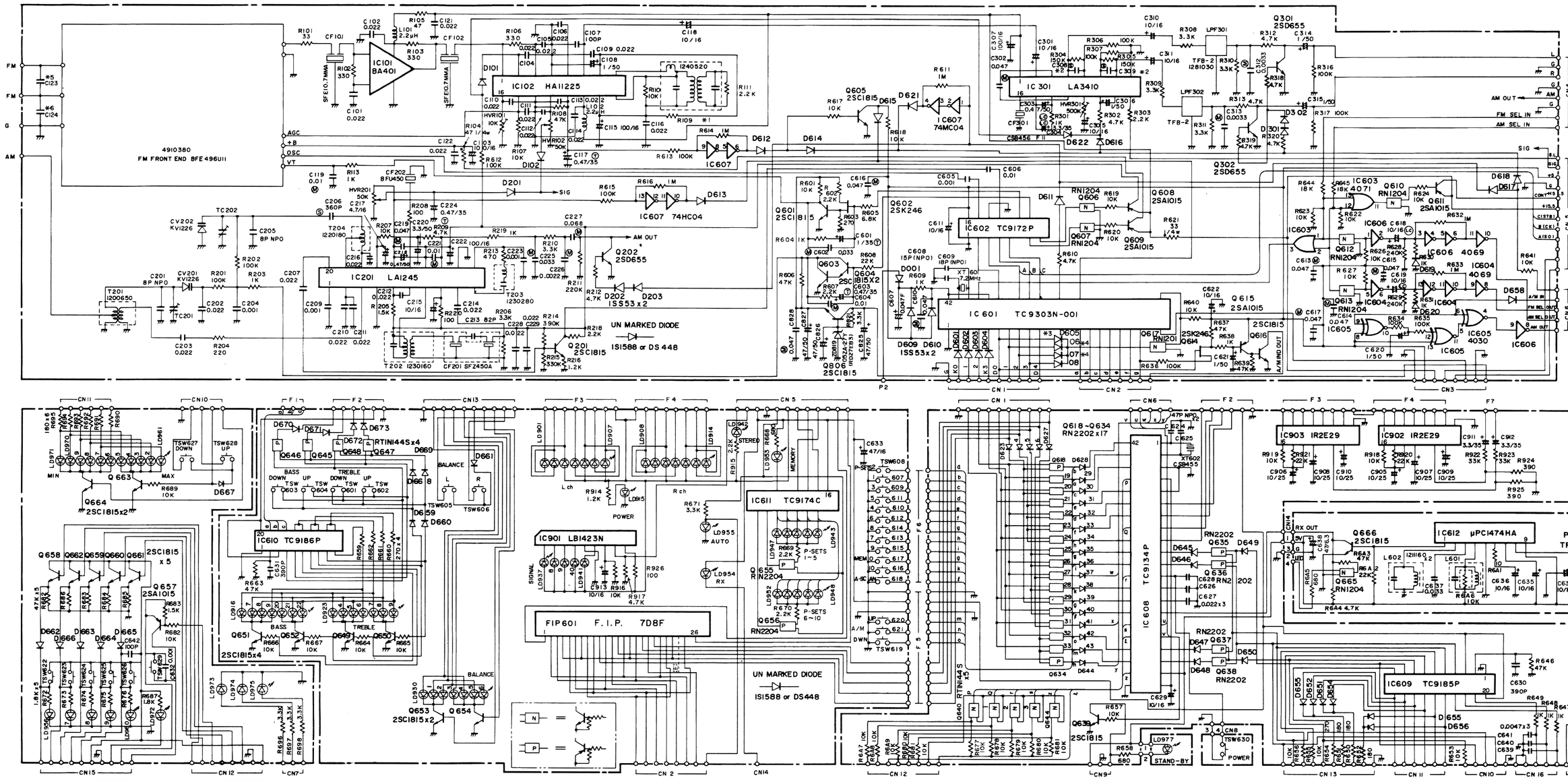

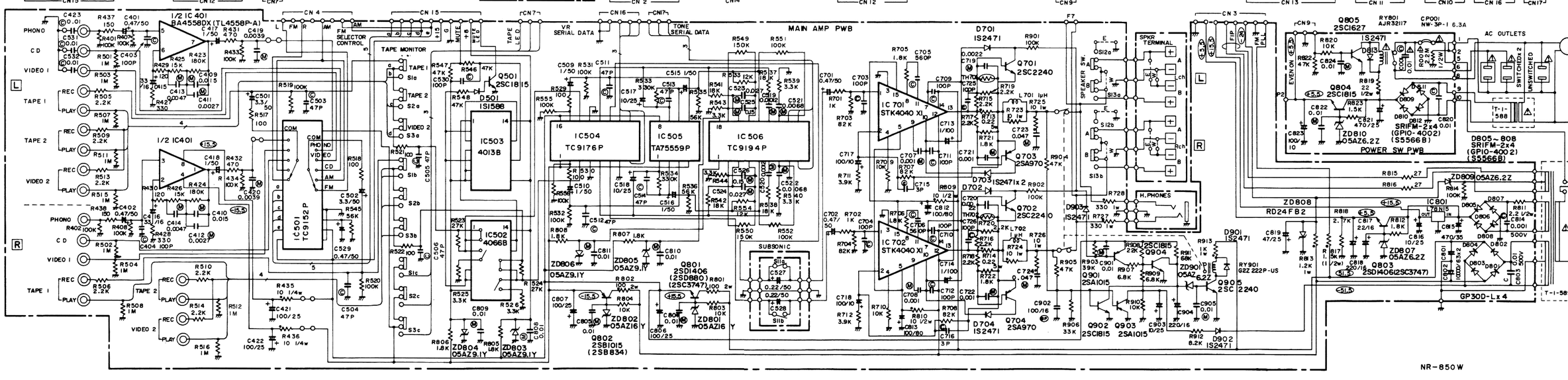

SCHEMATIC DIAGRAN NR-1050 (W)

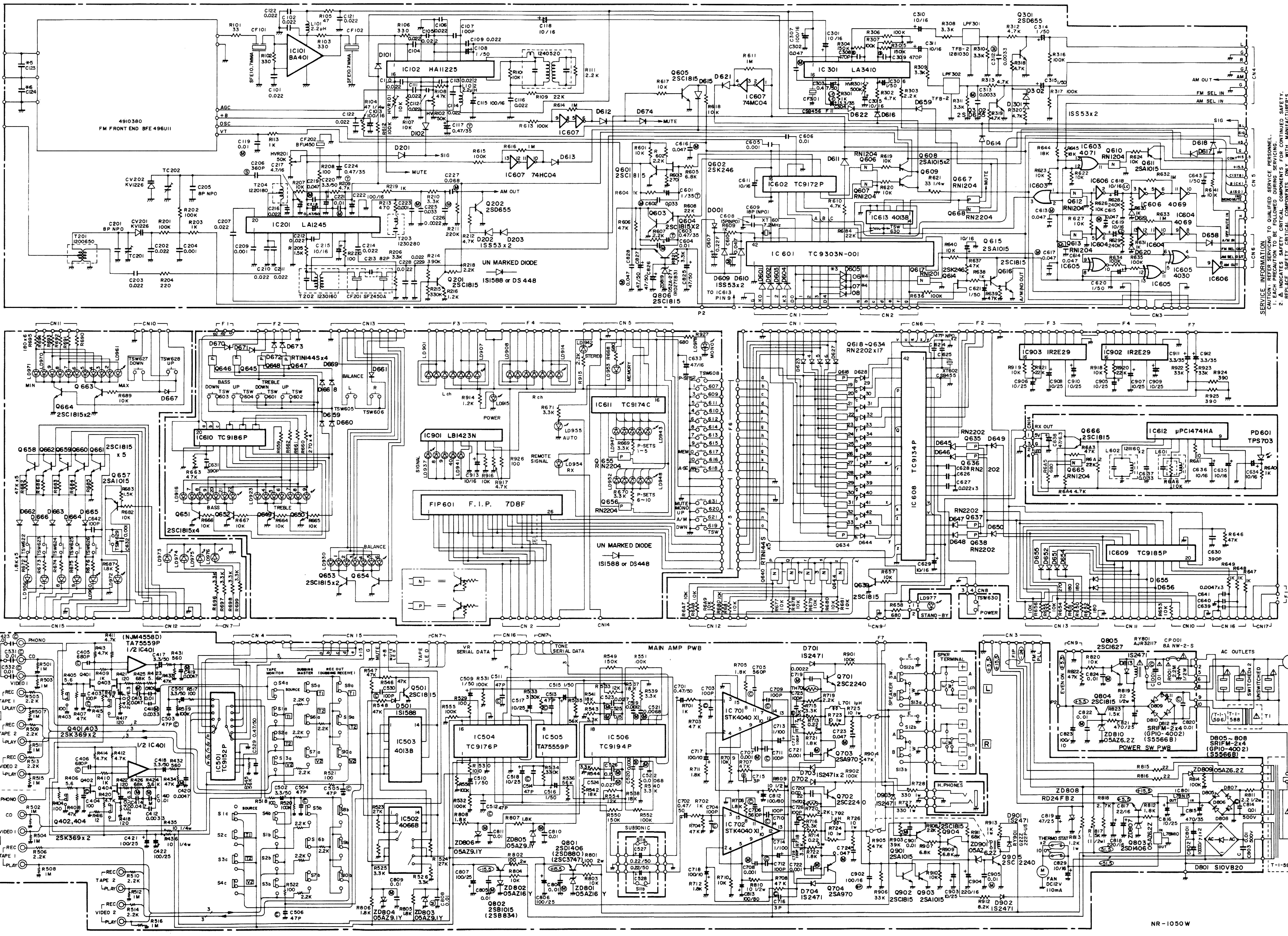

SERVICE INFORMATION
CAUTION: REFER SERVICING TO QUALIFIED SERVICE PERSONNEL.
1. EACH PRECAUTION TO BE FOLLOWED DURING SERVICING.
2. ⚠ INDICATES SAFETY CRITICAL COMPONENTS FOR CONTINUED SAFETY. REPLACE SAFETY CRITICAL COMPONENTS ONLY WITH MANUFACTURER'S RECOMMENDED PARTS.
3. BEFOR RETURNING THIS APPLIANCE TO THE CUSTOMER, YOU MAKE LEAKAGE-CURRENT OR RESISTANCE MEASUREMENTS TO DETERMINE THAT EXPOSED PARTS ARE ACCEPTABLY INSULATED FROM THE SUPPLY CIRCUIT.

1. VOLTAGE ARE MEASURED TO CHASS GROUND WITH A "DC VOLT METER" VOLTAGES ARE MEASURED WITH NO SIGNAL APPLIED.
2. -ww- : NONFLAMMABLE RESISTOR.
3. WARNING: ⚠ INDICATED SAFETY CRITICAL COMPONENTS FOR CONTINUED SAFETY CRITICAL COMPONENTS ONLY MANUFACTURE'S RECOMMENDED PARTS.

BLOCK DIAGRAM

TUNER SECTION

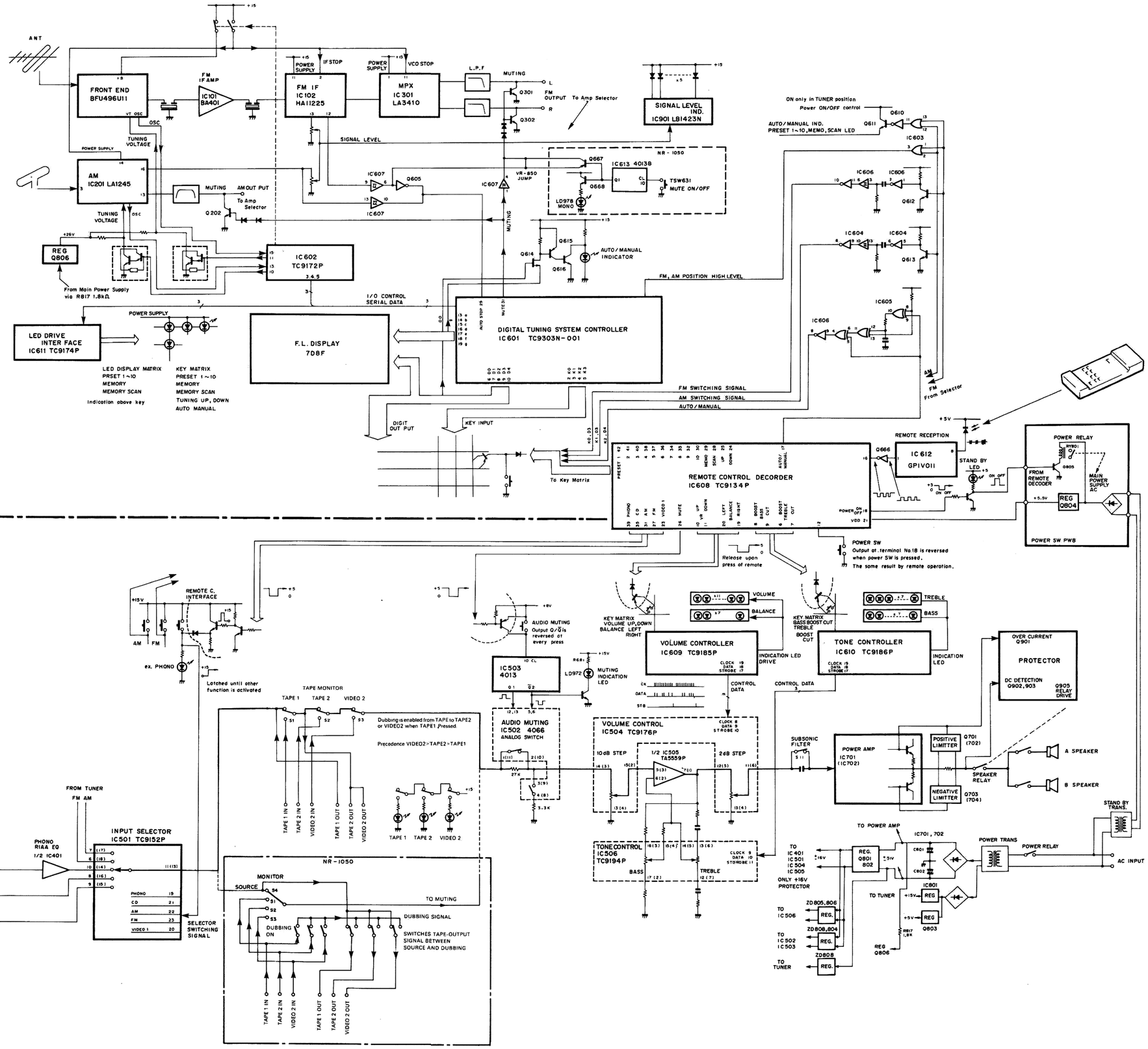

AMP SECTION

EXPLODED VIEWS

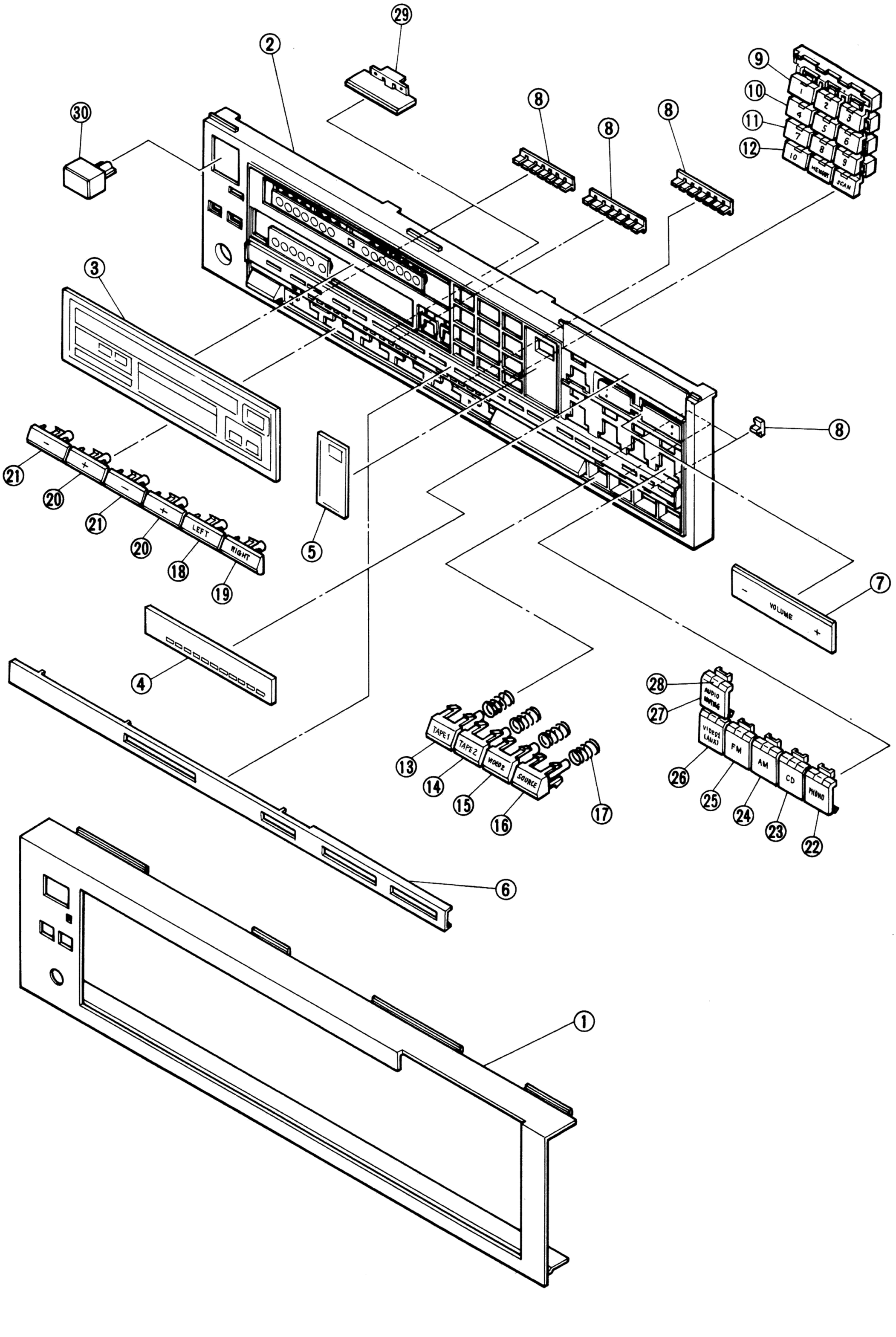

www.hifiengine.com

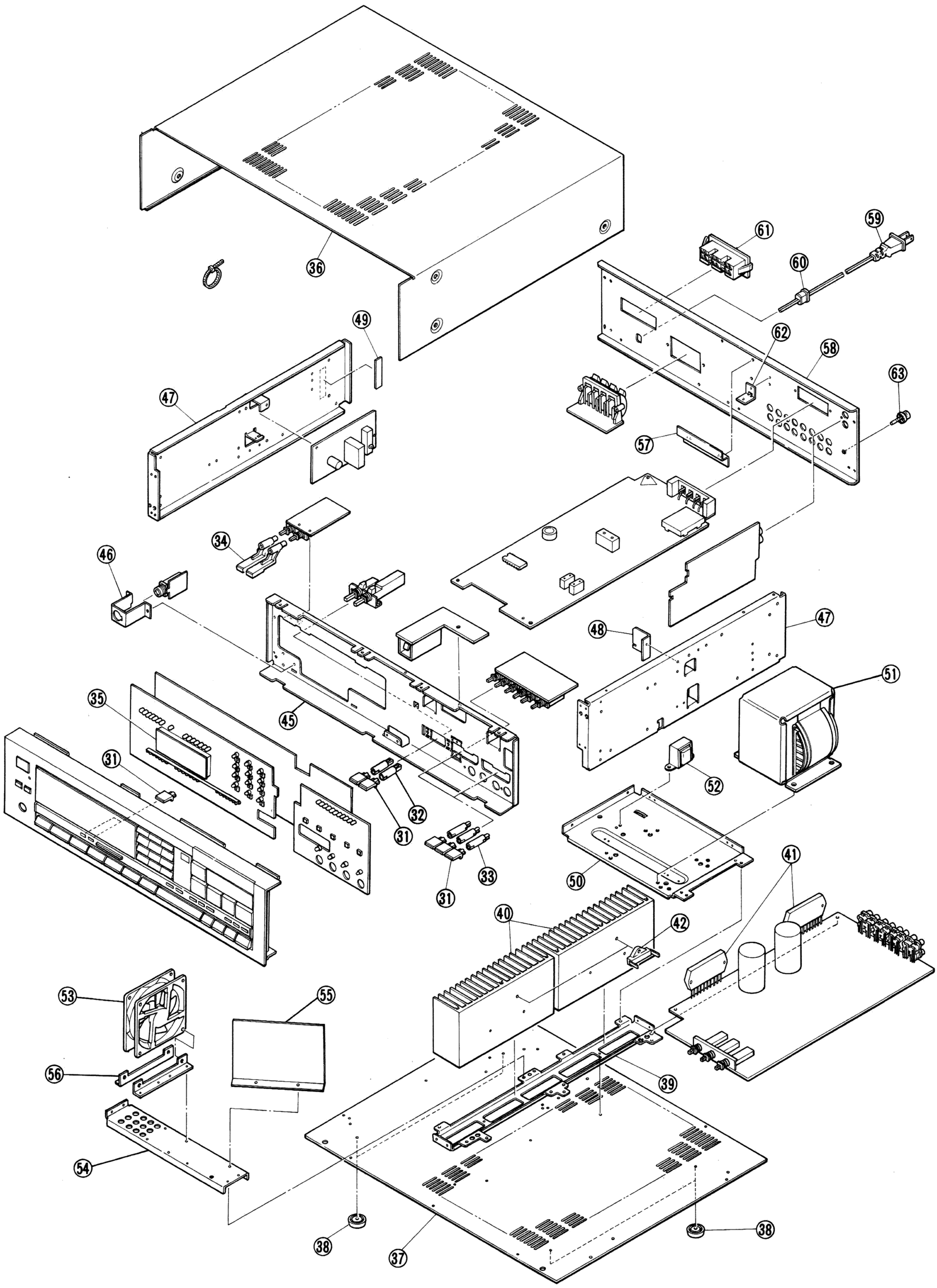

www.hifiengine.com

PARTS LIST

NOTES:

1. \+ Numberals in file indicate the quantity of parts used in one type.
   W ..... AC 120V 60Hz, U.S.A. & Canada Model
   E ..... AC 220V 50Hz, European Model
2. ++ TR: Transistor
   F: Fuse resistor
   FET: Field effect transistor
   VR: Volume control (Variable resistor)
   RES: Carbon film resistor
   MO-RES: Metal oxide film fixed resistor
   CEM-RES: Cemented wirewound fixed resistor
   FP: Flame proof
   BP-CAP: Bipolar electrolytic capacitor
   C-CAP: Ceramic capacitor
   E-CAP: Aluminum electrolytic capacitor
   M-CAP: Polyester film capacitor
   S-CAP: Polystyrene film capacitor
   T-CAP: Tantalum electrolytic capacitor
3. Assemblies and parts are subject to change without notice.
4. Parts ordering procedure:
   A. DO NOT USE THE "REFERENCE" number and "SYMBOL" number. (these are control # for the factory only.)
   B. Include in any order
      a. Part number. b. Part description. c. Model number.
      (any of the above lacking from an order may delay shipment of that order.)

WARNING

⚠ INDICATES SAFETY CRITICAL COMPONENTS.
FOR CONTINUED SAFETY, REPLACE SAFETY CRITICAL COMPONENTS ONLY WITH MANUFACTURER'S RECOMMENDED PARTS.

KEY NO.	SYMBOL NO.	TYPE+ NR-850 W	NR-850 E	NR-1050 W	NR-1050 E	DESCRIPTION	PART NO.
		1	1	-	-	CARTON BOX NR-850	9827200
		-	-	1	1	CARTON BOX NR-1050	9827260
		2	2	2	2	STYROL PAD NR-850	9841410
		1	1	1	1	POLY SACK B1	9640730
		1	1	1	1	POLY SACK NO.13	9640320
		1	1	-	-	OWNERS MANUAL NR-850	960472H
		-	-	1	1	OWNERS MANUAL NR-1050	960477H
		1	-	1	-	WARRANTY CARD (U.S.A only)	967056A
		1	-	1	-	WARRANTY CARD (CANADA only)	967049A
		1	-	1	-	SERVICE STATION LIST (U.S.A only)	9690360
		1	1	1	1	Q-MATCH ANT (EX)	4581360
		1	1	1	1	AM LOOP ANT	1200550
		1	1	1	1	REMOCON UNIT TX-30	9680020
		1	1	1	1	BATTERY UM-3A	9020010
		1	1	1	1	CARTON BOX TX-30	9827270
	CABINET AND CHASSIS ASSEMBLY						
1-a		1	1	-	-	FRONT PANEL NR-850	7887160
1-b		-	-	1	1	FRONT PANEL NR-1050	7887410
2-a		1	1	-	-	SUB PANEL NR-850	7871620
2-b		-	-	1	1	SUB PANEL	7871630
3-a		1	1	-	-	PANEL WINDOW NR-850	7803600
3-b		-	-	1	1	PANEL WINDOW MK2 NR-1050	7803740
4		1	1	1	1	VOLUME LEVEL SMOKE 1050	7803750
5		1	1	1	1	SENSOR SMOKE NR-1050	7803760
6-a		1	1	-	-	DISPLAY PANEL NR-850	7803580
6-b		-	-	1	1	DISPLAY PANEL NR-1050	7803650
7		1	1	1	1	VOLUME CAP	7854710
8						INDICATOR GLB	7406370
9		1	1	1	1	PRESET BUTTON 1-3	7854780
10		1	1	1	1	PRESET BUTTON 4-6	7854790
11		1	1	1	1	PRESET BUTTON 7-9	7854800
12		1	1	1	1	PRESET BUTTON 10-SCAN	7854810
13		1	1	1	1	BUTTON P1912-TAPE 1	7854610
14		1	1	1	1	BUTTON P1912-TAPE 2	7854620
15		1	1	1	1	BUTTON P1912-VIDEO 2	7854630
16-a		1	1	-	-	BUTTON P1912	7854600
16-b		-	-	1	1	BUTTON P1912-SOURCE	7854830
17		4	4	4	4	SPRING C8002	7441420
18		1	1	1	1	BUTTON P2912-LEFT	7854650
19		1	1	1	1	BUTTON P2912-RIGHT	7854660
20		2	2	2	2	BUTTON P2912- +	7854670
21		2	2	2	2	BUTTON P2912- −	7854680
22		1	1	1	1	BUTTON P2022 (PHONO)	7854720
23		1	1	1	1	BUTTON P2022 (CD)	7854730
24		1	1	1	1	BUTTON P2022 (AM)	7854740
25		1	1	1	1	BUTTON P2022 (FM)	7854750
26		1	1	1	1	BUTTON P2022 (VIDEO 1)	7854760
27		1	1	1	1	BUTTON P2022 (AUDIO-M)	7854770
28		6	6	6	6	INDICATOR GLB 27C	7406380
29		1	1	1	1	BUTTON P344C	7854690
30		1	1	1	1	BUTTON P1420BK	7852870
31		2	2	10	10	BUTTON P314C-BK	7854640
32		1	1	2	2	RELAY SHAFT 24	7404110
33		-	-	6	6	RELAY SHAFT 31	7401890
34		2	2	2	2	BUTTON P510C	7854700
35		1	1	1	1	FILTER	7003340
36-a		1	-	-	-	COVER NR-850 BK	7821900
36-b		-	1	-	-	COVER NR-850 BK-2	7821970
36-c		-	-	1	-	COVER NR-1050 BK	7821940
36-d		-	-	-	1	COVER NR-1050 BK-2	7821960
37-a		1	1	-	-	BOTTOM PLATE NR-850	7329420
37-b		-	-	1	1	BOTTOM PLATE NR-1050	7329510
38		4	4	4	4	POLY FOOT 7114	7403520
39		1	1	1	1	H-SINK HOLD	7228360
40		2	2	2	2	H-SINK 850	7480630
41-a		2	2	-	-	IC STK4040XI	518303S
41-b		-	-	2	2	IC STK4044XI	518306S
42		-	-	2	2	THERMO STAT OHD3-100MU	4901150
43		-	1	-	1	GND PLATE NR-850	7036020
⚠ 44-a		-	1	-	-	MIDGET FUSE 3.15A	4721010
⚠ 44-b		-	-	-	1	MIDGET FUSE T4A	4721020

KEY NO.	SYMBOL NO.	TYPE+ NR-850 W	NR-850 E	NR-1050 W	NR-1050 E	DESCRIPTION	PART NO.
45		1	1	1	1	FRONT PLATE 850	7329390
46		1	1	1	1	EAR JACK HOLD	7035770
47		2	2	2	2	SIDE PLATE 850	7228340
48		1	1	1	1	PCB BRKT 850-T	7035990
49-a		1	-	-	-	BRKR LABEL NW-3P 6.3A	9638770
49-b		-	-	1	-	BRKR LAVEL NW-2S-8A	9638800
50		1	1	1	1	P.T HOLD 850	7228350
⚠ 51-a		1	-	-	-	P.T T-1-589	1105890
⚠ 51-b		-	1	-	-	P.T T-1-586	1105860
⚠ 51-c		-	-	1	-	P.T T-1-591	1105910
⚠ 51-d		-	-	-	1	P.T T-1-597	1105970
⚠ 52-a		1	-	1	-	P.T T-1-588	1105880
						(P.T T-1-596	1105960)
⚠ 52-b		-	1	-	1	P.T T-1-585	1105850
						(P.T T-1-592A	1105920)
53		-	-	1	1	DC FAN MMF-08B12DM-F03	MOT0006
54		-	-	1	1	FAN HOLD PLATE	7228380
55		-	-	1	1	GUIDE PLATE	7035960
56		-	-	2	2	FAN BRKT	7035950
57		1	1	1	1	WIRE GUIDE PLATE	7036010
	BACK PLATE ASSEMBLY						
58-a		1	-	-	-	BACK PLATE NR-850 (W)	7329400
58-b		-	1	-	-	BACK PLATE NR-850 (E)	7329410
58-c		-	-	1	-	BACK PLATE NR-1050 (W)	7329520
58-d		-	-	-	1	BACK PLATE NR-1050 (E)	7329530
⚠ 59-a		1	-	1	-	PLUG CORD SPT-2	606014A
⚠ 59-b		-	1	-	1	CEE STP PLUG CORD	600508A
⚠ 60		1	1	1	1	CORD STP SR-4N-4	7400690
⚠ 61		1	-	1	-	AC SKT AC-T01LB01	4500340
62		1	1	1	1	PWB BRKT	7035090
63		1	1	1	1	GND TERMINAL	4450660
	MAIN AMP PWB ASSEMBLY						
		1	1	1	1	MAIN AMP PWB	4632500
	PHONO EQ AMP SECTION						
		1	1	1	1	PINTER 2P	4442130
	IC401	1	1	-	-	IC BA4558DX	518270S
	IC401	-	-	1	1	IC TA75559P	518252S
	Q401 ~ 404	-	-	4	4	FET 2SK370	516055S
	R401,402	2	2	-	-	RES 100K OHM 1/4W 5%	328104J
	R403,404	-	-	2	2	RES 100 OHM 1/4W 5%	328101J
	R405,406	-	-	2	2	RES 5.6 OHM 1/4W 5%	328568J
	R407,408	2	2	-	-	RES 100K OHM 1/4W 5%	328104J
	R407,408	-	-	2	2	RES 47K OHM 1/4W 5%	328473J
	R409,410	-	-	2	2	RES 1K OHM 1/4W 5%	328102J
	R411 ~ 414	-	-	4	4	RES 4.7K OHM 1/4W 5%	328472J
	R415,416	-	-	2	2	RES 12 OHM 1/4W 5%	328120J
	R417,418	-	-	2	2	RES 120 OHM 1/4W 5%	328121J
	R419,420	-	-	2	2	RES 4.7K OHM 1/4W 5%	328472J
	R421,422	-	-	2	2	RES 120 OHM 1/4W 5%	328121J
	R423,424	2	2	-	-	RES 180K OHM 1/4W 5%	328184J
	R423,424	-	-	2	2	RES 5.6K OHM 1/4W 5%	328562J
	R425,426	2	2	-	-	RES 15K OHM 1/4W 5%	328153J
	R425,426	-	-	2	2	RES 68K OHM 1/4W 5%	328683J
	R427,428	2	2	-	-	RES 270 OHM 1/4W 5%	328271J
	R429,430	2	2	-	-	RES 120 OHM 1/4W 5%	328121J
	R431,432	2	2	-	-	RES 470 OHM 1/4W 5%	328471J
	R431,432	-	-	2	2	RES 560 OHM 1/4W 5%	328561J
	R433,434	2	2	-	-	RES 100K OHM 1/4W 5%	328104J
	R433,434	-	-	2	2	RES 47K OHM 1/4W 5%	328473J
	R435,436	2	2	2	2	FP-RES 10 OHM 1/4W 5%	328100L
	R437,438	2	2	-	-	RES 150 OHM 1/4W 5%	328151J
	C401,402	2	2	-	-	E-CAP 0.47 µF 50V	211505S
	C403,404	2	2	2	2	C-CAP 100 pF 50V	232101K
	C405,406	-	-	2	2	C-CAP 680 pF	232681K
	C407,408	-	-	2	2	E-CAP 2200 µF 6.3V	211042S
	C409,410	2	2	-	-	M-CAP 0.015 µF 50V	222153J
	C409,410	-	-	2	2	M-CAP 0.01 µF	222103J
	C411,412	2	2	-	-	M-CAP 0.0027µF 50V	222272J

www.hifiengine.com

PARTS ORDERING PROCEDURE ..... DO NOT USE THE "REFERENCE" number and "SYMBOL" number. (these are control # for the factory only.) Include in any order:
a. Part number, b. Part despcription, c. Model number. (any of the above lacking from an order may delay shipment of the order.)

KEY NO.	SYMBOL NO.	TYPE+ NR-850 W	NR-850 E	NR-1050 W	NR-1050 E	DESCRIPTION	PART NO.
	C411,412	-	-	2	2	M-CAP 0.0033µF	222332J
	C413,414	2	2	-	-	M-CAP 0.0047µF 50V	222472J
	C413,414	-	-	2	2	M-CAP 0.047 µF	222473J
	C415,416	2	2	-	-	E-CAP 33 µF 50V	211223S
	C417,418	2	2	-	-	E-CAP 1 µF 50V	211510S
	C417,418	-	-	2	2	E-CAP 3.3 µF 50V	211513S
	C419,420	2	2	-	-	M-CAP 0.0039µF 50V	222392J
	C419,420	-	-	2	2	M-CAP 0.0047µF	222472J
	C421,422	2	2	2	2	E-CAP 100 µF 25V	211330S
	C423	1	1	1	1	C-CAP 0.01 µF 50V	231102Z
		-	-	1	1	SLD SW SSR24351D	4020590
	SPEAKER SWITCH SECTION						
	S12,13	1	1	1	1	TWIN PUSH SW SPUN22	4042900
	R727,728	2	2	2	2	FP-MO-RES 330 OHM 1W	361331L
	SPEAKER TERMINAL SECTION						
		1	1	1	1	SPKR PUSH TER 8P	4460510
	HEAD PHONE JACK SECTION						
		1	1	1	1	EAR JACK YKB21-5009	4550640
	SUBSONIC FILTER SECTION						
	S11	1	1	-	-	MONO PUSH SW SPUF 12	4042940
	S11	-	-	1	1	TWIN PUSH SW	4043020
		-	-	1	1	REMOTE WIRE	4583400
	C527,528	2	2	2	2	E-CAP 0.22 µF 50V	211502S
	TAPE DUBBING SECTION						
	S5,10	-	-	2	2	PUSH SW SPUN32	4042970
	R505,506	-	-	2	2	RES 2.2K OHM 1/4W 5%	328222J
	R509,510	-	-	2	2	RES 2.2K OHM 1/4W 5%	328222J
	R513,514	-	-	2	2	RES 2.2K OHM 1/4W 5%	328222J
	R719,720	-	-	2	2	RES 2.2K OHM 1/4W 5%	328222J
	INPUT SELECTOR AND MUTING SECTION						
		1	1	1	1	PINTER 2Px2	4444190
		3	3	3	3	PINTER 2Px2	4444160
	S1~3	1	1	-	-	PUSH SW SPUL 34	4042950
	S1~4	-	-	1	1	PUSH SW SPUL 44	4042960
	IC501	1	1	1	1	IC TC9152P	518295S
	IC502	1	1	1	1	IC TC4066BP	518179S
	IC503	1	1	1	1	IC TC4013BP	518080S
	Q501	1	1	1	1	TR 2SC1815	512107S
	D501	1	1	1	1	D 1S1588	501030S
	R501~504	4	4	4	4	RES 1M OHM 1/4W 5%	328105J
	R505,506	2	2	2	2	RES 2.2K OHM 1/4W 5%	328222J
	R507,508	2	2	2	2	RES 1M OHM 1/4W 5%	328105J
	R509,510	2	2	2	2	RES 2.2K OHM 1/4W 5%	328222J
	R511,512	2	2	2	2	RES 1M OHM 1/4W 5%	328105J
	R513,514	2	2	2	2	RES 2.2K OHM 1/4W 5%	328222J
	R515,516	2	2	2	2	RES 1M OHM 1/4W 5%	328105J
	R517,518	2	2	2	2	RES 100 OHM 1/4W 5%	328101J
	R519,520	2	2	2	2	RES 100K OHM 1/4W 5%	328104J
	R521,522	2	2	2	2	RES 100 OHM 1/4W 5%	328101J
	R523,524	2	2	2	2	RES 27K OHM 1/4W 5%	328273J
	R525,526	2	2	2	2	RES 3.3K OHM 1/4W 5%	328332J
	R545	1	1	1	1	RES 56K OHM 1/4W 5%	328563J
	R546~548	3	3	3	3	RES 47K OHM 1/4W 5%	328473J
	C501,502	2	2	2	2	E-CAP 3.3 µF 50V	211513S
	C503~506	4	4	4	4	C-CAP 47 pF 50V	232470K
	C529	1	1	1	1	E-CAP 0.47 µF 50V	211505S
	C531,532	2	2	2	2	C-CAP 0.01 µF 50V	231103Z
	VR AND TONE SECTION						
	IC504	1	1	1	1	IC TC9176P	518277S
	IC505	1	1	1	1	IC TA75559P	518252S
	IC506	1	1	1	1	IC TC9194P	518280S
	R529,530	2	2	2	2	RES 100 OHM 1/4W 5%	328101J
	R531,532	2	2	2	2	RES 100K OHM 1/4W 5%	328104J
	R533,534	2	2	2	2	RES 330K OHM 1/4W 5%	328334J
	R535,536	2	2	2	2	RES 56K OHM 1/4W 5%	328563J
	R537,538	2	2	2	2	RES 18K OHM 1/4W 5%	328183J
	R539,540	2	2	2	2	RES 3.3K OHM 1/4W 5%	328332J
	R541,542	2	2	2	2	RES 18K OHM 1/4W 5%	328183J
	R543,544	2	2	2	2	RES 3.3K OHM 1/4W 5%	328332J
	R549,550	2	2	2	2	RES 150K OHM 1/4W 5%	328154J
	R551,552	2	2	2	2	RES 100K OHM 1/4W 5%	328104J
	R553,554	2	2	2	2	RES 12K OHM 1/4W 5%	328123J
	R555,556	2	2	2	2	RES 100K OHM 1/4W 5%	328104J
	C509,510	2	2	2	2	E-CAP 1 µF 50V	211510S
	C511~514	4	4	4	4	C-CAP 47 pF 50V	232470K
	C515,516	2	2	2	2	E-CAP 1 µF 50V	211510S
	C517,518	2	2	2	2	E-CAP 10 µF 25V	211320S
	C519,520	2	2	2	2	M-CAP 0.0012µF 50V	222122J
	C521,522	2	2	2	2	M-CAP 0.0068µF 50V	222682J
	C523,524	2	2	2	2	M-CAP 0.027 µF 50V	222273J
	C525,526	2	2	2	2	M-CAP 0.15 µF 50V	222154J

KEY NO.	SYMBOL NO.	TYPE+ NR-850 W	NR-850 E	NR-1050 W	NR-1050 E	DESCRIPTION	PART NO.
	MAIN AMP SECTION						
	Q701,702	2	2	2	2	TR 2SC2240	512102S
	Q703,704	2	2	2	2	TR 2SA970	510103S
	TH701,702	2	2	2	2	TH D2FHL 503S	5400200
	D701~704	4	4	4	4	D 1SS2471	501035S
	L701,702	2	2	2	2	CH-COIL 1µH	1210960
	R701,702	2	2	2	2	RES 1K OHM 1/4W 5%	328102J
	R703,704	2	2	-	-	RES 82K OHM 1/4W 5%	328823J
	R703,704	-	-	2	2	RES 47K OHM 1/4W 5%	328473J
	R705,706	2	2	2	2	RES 1.8K OHM 1/4W 5%	328182J
	R707,708	2	2	-	-	RES 82K OHM 1/4W 5%	328823J
	R707,708	-	-	2	2	RES 47K OHM 1/4W 5%	328473J
	R709,710	2	2	2	2	RES 10K OHM 1/4W 5%	328103J
	R711,712	2	2	-	-	RES 3.9K OHM 1/4W 5%	328392J
	R711,712	-	-	2	2	RES 1.8K OHM 1/4W 5%	328182J
	R713,714	2	2	2	2	CEM-RES 0.22 OHM 5W	384229W
	R715~718	4	4	-	-	RES 2.2K OHM 1/4W 5%	328222J
	R715~718	-	-	4	4	RES 3.3K OHM 1/4W 5%	328332J
	R719,720	2	2	2	2	RES 2.2K OHM 1/4W 5%	328222J
	R721,722	2	2	2	2	RES 1.8K OHM 1/4W 5%	328182J
	R723~726	4	4	4	4	FP-MO RES 10 OHM 1W	361100L
	C701,702	2	2	-	-	E-CAP 0.47 µF 50V	211505S
	C701,702	-	-	2	2	E-CAP 2.2 µF 50V	211512S
	C703,704	2	2	2	2	C-CAP 100 pF 50V	232101K
	C705,706	2	2	2	2	C-CAP 560 pF 50V	232561K
	C707,708	2	2	2	2	M-CAP 0.001 µF 50V	222102K
	C709~712	4	4	4	4	C-CAP 100 pF 50V	234101K
	C713,714	2	2	2	2	E-CAP 1 µF 100V	211810S
	C715,716	2	2	2	2	C-CAP 3 pF 50V	232309D
	C717,718	2	2	2	2	E-CAP 100 µF 10V	211130S
	C719,720	2	2	2	2	M-CAP 0.0022µF 50V	222222K
	C721,722	2	2	2	2	M-CAP 0.001 µF 50V	222102K
	C723,724	2	2	2	2	M-CAP 0.047 µF 250V	274473K
	C725,726	2	2	2	2	C-CAP 100 pF 50V	232101K
	PROTECTOR SECTION						
	RY901	1	1	1	1	RELAY G2Z-222P-US	1700300
	Q901	1	1	1	1	TR 2SA1015	510102S
	Q902	1	1	1	1	TR 2SC1815	512107S
	Q903	1	1	1	1	TR 2SA1015	510102S
	Q904	1	1	1	1	TR 2SC1815	512107S
	Q905	1	1	1	1	TR 2SC2240	512102S
	D901~903	3	3	3	3	D 1S2471	501035S
	ZD901	1	1	1	1	ZD 05A6.2Z	502146S
	R901,902	2	2	2	2	RES 100K OHM 1/4W 5%	328104J
	R903	1	1	1	1	RES 39K OHM 1/4W 5%	328393J
	R904,905	2	2	2	2	RES 47K OHM 1/4W 5%	328473J
	R906	1	1	1	1	RES 33K OHM 1/4W 5%	328333J
	R907	1	1	1	1	RES 6.8K OHM 1/4W 5%	328682J
	R908	1	1	1	1	RES 22K OHM 1/4W 5%	328223J
	R909	1	1	1	1	RES 6.8K OHM 1/4W 5%	328682J
	R910	1	1	1	1	RES 10K OHM 1/4W 5%	328103J
	R911	1	1	1	1	RES 56K OHM 1/4W 5%	328563J
	R912	1	1	1	1	RES 8.2K OHM 1/4W 5%	328822J
	R913	1	1	1	1	FP-MO-RES 1K OHM 1W	361102L
	C901	1	1	1	1	M-CAP 0.01 µF	222103K
	C902	1	1	1	1	BP-CAP 100 µF 16V	215230N
	C903	1	1	1	1	E-CAP 10 µF 25V	211320S
	C904	1	1	1	1	E-CAP 220 µF 16V	211232S
	C905	1	1	1	1	M-CAP 0.01 µF	222103K
	REG SECTION						
		2	2	3	3	H-SINK 1625MT	7480270
		-	-	1	1	H-SINK IC3030-MT	7480350
		1	1	1	1	H-SINK NR-850-A	708259A
		-	-	1	1	THERMO SHEET 3030	7903480
	IC801	1	1	1	1	IC L78N15	518296S
		-	-	1	1	IC L78M10	518307S
	Q801	1	1	1	1	TR 2SD1406	513133S
	Q802	1	1	1	1	TR 2SB1015	511130S
	Q803	1	1	1	1	TR 2SD1406	513133S
	D801~804	4	4	-	-	D GP30D-L	560063S
	D801	-	-	1	1	D S10VB20	560058S
	D805~808	4	4	4	4	D SR1FM-2	560018S
	ZD801,802	2	2	2	2	ZD 05AZ16Y	502150S
	ZD803~806	4	4	4	4	ZD 05AZ9.1Y	502147S
	ZD807	1	1	1	1	ZD 05AZ6.2Z	502146S
	ZD808	1	1	1	1	ZD RD24FB2	502104S
	ZD809	1	1	1	1	ZD 05AZ6.2Z	502146S
	R801,802	2	2	2	2	FP-MO-RES 100 OHM 2W	362101L
	R803,804	2	2	2	2	RES 10K OHM 1/4W 5%	328103J
	R805~808	4	4	4	4	RES 1.8K OHM 1/4W 5%	328182J
	R809,810	2	2	2	2	FP-RES 10 OHM 1/2W	329100L
	R811	1	1	1	1	F-RES 2.2 OHM 1/2W	355229V
	R812	1	1	1	1	RES 1.8K OHM 1/4W 5%	328182J
	R813	1	1	1	1	FP-MO-RES 1.2K OHM 1W	361122L
	R814	1	1	1	1	RES 100K OHM 1/4W 5%	328104J
	R815,816	2	2	-	-	RES 27 OHM 1/4W 5%	328270J
	R815,816	-	-	2	2	RES 22 OHM 1/4W 5%	328220J
	R817	1	1	-	-	FP-RES 1.5K OHM 1/2W	329152L
	R818	1	1	1	1	RES 2.7K OHM 1/4W 5%	328272J
	R817	-	-	1	1	FP-RES 1.8K OHM 1/2W	329182L
	C801,802	2	2	-	-	E-CAP 10000 µF 63V	2100310
	C801,802	-	-	2	2	E-CAP 10000 µF 71V	2100380
	C803	1	1	1	1	C-CAP 0.01 µF 500V	238103P

www.hifiengine.com

PARTS ORDERING PROCEDURE ..... DO NOT USE THE "REFERENCE" number and "SYMBOL" number. (these are control # for the factory only.) Include in any order:
a. Part number, b. Part despcription, c. Model number. (any of the above lacking from an order may delay shipment of the order.)

KEY NO.	SYMBOL NO.	TYPE+ NR-850 W	NR-850 E	NR-1050 W	NR-1050 E	DESCRIPTION	PART NO.
	C804,805	2	2	2	2	M-CAP 0.01 µF 50V	222103K
	C806,807	2	2	2	2	E-CAP 100 µF 25V	211330S
	C808~811	4	4	4	4	M-CAP 0.01 µF 50V	222103K
	C812,813	2	2	2	2	E-CAP 100 µF 80V	211730S
	C814	1	1	1	1	C-CAP 0.01 µF 500V	238103P
	C815	1	1	1	1	E-CAP 470 µF 35V	211435S
	C816	1	1	1	1	E-CAP 10 µF 25V	211320S
	C817	1	1	1	1	E-CAP 22 µF 10V	211122S
	C818	1	1	1	1	E-CAP 220 µF 10V	211132S
	C819	1	1	1	1	E-CAP 47 µF 25V	211325S
	C829	-	-	1	1	E-CAP 10 µF 16V	211220S
	TUNER PWB ASSEMBLY						
		1	1	1	1	TUNER PWB	461351A
	FM SECTION						
		1	1	1	1	FRONT END BFE496U11	4910380
	IC101	1	1	1	1	IC BA401	518271S
	IC102	1	1	1	1	IC HA11225	518070S
	CF101,102	2	2	2	2	C-FIL SFE10.7MM-A	1280410
	T101	1	1	1	1	FM DET COIL	1240520
	L101,102	2	2	2	2	INDUCTOR 2R2M	121114S
	HVR101	1	1	1	1	HVR B10K	4302070
	HVR102	1	1	1	1	HVR B50K	4302090
	R101	1	1	1	1	RES 33 OHM 1/4W 5%	328330J
	R102,103	2	2	2	2	RES 330 OHM 1/4W 5%	328331J
	R104	1	1	1	1	FP-RES 47 OHM 1/4W 5%	328470L
	R105	1	1	1	1	RES 47 OHM 1/4W 5%	328470J
	R106	1	1	1	1	RES 330 OHM 1/4W 5%	328331J
	R107	1	1	1	1	RES 10K OHM 1/4W 5%	328103J
	R108	1	1	1	1	RES 47K OHM 1/4W 5%	328473J
	R109	1	-	1	-	RES 22K OHM 1/4W 5%	328223J
	R109	-	1	-	1	RES 39K OHM 1/4W 5%	328393J
	R110	1	1	1	1	RES 10K OHM 1/4W 5%	328103J
	R111	1	1	1	1	RES 2.2K OHM 1/4W 5%	328222J
	R113	1	1	1	1	RES 1K OHM 1/4W 5%	328102J
	C101,102	2	2	2	2	C-CAP 0.022 µF 16V	236223N
	C103	1	1	1	1	E-CAP 100 µF 16V	211230S
	C104~106	3	3	3	3	C-CAP 0.022 µF 16V	236223N
	C107	1	1	1	1	C-CAP 100 pF 50V	236101J
	C108	1	1	1	1	E-CAP 1 µF 50V	211510S
	C109~114	6	6	6	6	C-CAP 0.022 µF 16V	236223N
	C115	1	1	1	1	E-CAP 100 µF 16V	211230S
	C116	1	1	1	1	C-CAP 0.022 µF 16V	236223N
	C117	1	1	1	1	T-CAP 0.47 µF 35V	252405M
	C118	1	1	1	1	E-CAP 10 µF 16V	211220S
	C119	1	1	1	1	M-CAP 0.01 µF 50V	222103J
	C121,122	2	2	2	2	C-CAP 0.022 µF 16V	236223N
	MPX SECTION						
	IC301	1	1	1	1	IC LA3410	518285S
	Q301,302	2	2	2	2	TR 2SD655	513115S
	D301,302	2	2	2	2	D 1SS53	501023S
	CF301	1	1	1	1	CF CSB456F11	1281020
	LPF301,302	2	2	2	2	LPF TFB-2	1281030
	HVR301	1	1	1	1	HVR B500K	4302120
	R301	1	1	1	1	RES 1K OHM 1/4W 5%	328102J
	R302	1	1	1	1	RES 4.7K OHM 1/4W 5%	328472J
	R303	1	1	1	1	RES 2.2K OHM 1/4W 5%	328222J
	R304,305	2	2	2	2	RES 150K OHM 1/4W 5%	328154J
	R306,307	2	2	2	2	RES 100K OHM 1/4W 5%	328104J
	R308~311	4	4	4	4	RES 3.3K OHM 1/4W 5%	328332J
	C312,313	2	2	2	2	RES 4.7K OHM 1/4W 5%	328472J
	C316,317	2	2	2	2	RES 100K OHM 1/4W 5%	328104J
	C318~320	3	3	3	3	RES 4.7K OHM 1/4W 5%	328472J
	C301	1	1	1	1	E-CAP 10 µF 16V	211220S
	C302	1	1	1	1	M-CAP 0.047 µF	222473J
	C303	1	1	1	1	E-CAP 0.47 µF 50V	211505L
	C304	1	1	1	1	E-CAP 3.3 µF 35V	211413L
	C305	1	1	1	1	E-CAP 10 µF 16V	211220S
	C306	1	1	1	1	E-CAP 1 µF 50V	211510S
	C307	1	1	1	1	E-CAP 100 µF 16V	211230S
	C308,309	2	-	2	-	S-CAP 470 pF 50V	223471V
	C308,309	-	2	-	2	S-CAP 330 pF 50V	223331V
	C310,311	2	2	2	2	E-CAP 10 µF 16V	211220S
	C312,313	2	2	2	2	M-CAP 0.0033µF	222332J
	C314,315	2	2	2	2	E-CAP 1 µF 50V	211510S
	AM SECTION						
	IC201	1	1	1	1	IC LA1245	518130S
	Q201	1	1	1	1	TR 2SC1815	512107S
	Q202	1	1	1	1	TR 2SD655	513115S
	T201	1	1	1	1	AM ANT COIL	1200650
	T202	1	1	1	1	AM IFT COIL	1230160
	T203	1	1	1	1	AM DET COIL	1230280
	T204	1	1	1	1	AM OSC COIL	1220180
	CF201	1	1	1	1	C-FIL SFZ450A	1280730
	CF202	1	1	1	1	C-FIL BFU450C4N	1280800
	CV201,202	2	2	2	2	D KW226	504005S
	D202,203	2	2	2	2	D 1SS53	501023S
	HVR201	1	1	1	1	HVR B50K	4302090
	TC201,202	2	2	2	2	TRM VCT56C115A	4241110
	R201,202	2	2	2	2	RES 100K OHM 1/4W 5%	328104J
	R203	1	1	1	1	RES 1K OHM 1/4W 5%	328102J

KEY NO.	SYMBOL NO.	TYPE+ NR-850 W	NR-850 E	NR-1050 W	NR-1050 E	DESCRIPTION	PART NO.
	R204	1	1	1	1	RES 220 OHM 1/4W 5%	328221J
	R205	1	1	1	1	RES 1.5K OHM 1/4W 5%	328152J
	R206	1	1	1	1	RES 3.3K OHM 1/4W 5%	328332J
	R207	1	1	1	1	RES 10K OHM 1/4W 5%	328103J
	R208	1	1	1	1	RES 100 OHM 1/4W 5%	328101J
	R209	1	1	1	1	RES 4.7K OHM 1/4W 5%	328472J
	R210	1	1	1	1	RES 3.3K OHM 1/4W 5%	328332J
	R211	1	1	1	1	RES 220K OHM 1/4W 5%	328224J
	R212	1	1	1	1	RES 4.7K OHM 1/4W 5%	328472J
	R213	1	1	1	1	RES 470 OHM 1/4W 5%	328471J
	R214	1	1	1	1	RES 390K OHM 1/4W 5%	328394J
	R215	1	1	1	1	RES 330K OHM 1/4W 5%	328334J
	R216	1	1	1	1	RES 1.2K OHM 1/4W 5%	328122J
	R218	1	1	1	1	RES 2.2K OHM 1/4W 5%	328222J
	R219	1	1	1	1	RES 1K OHM 1/4W 5%	328102J
	R220	1	1	1	1	RES 100 OHM 1/4W 5%	328101J
	C201	1	1	1	1	C-CAP 8 pF 50V	232809C
	C202,203	2	2	2	2	C-CAP 0.022 µF 16V	236223N
	C204	1	1	1	1	C-CAP 0.001 µF 50V	236102K
	C205	1	1	1	1	C-CAP 8 pF 50V	232809C
	C206	1	1	1	1	S-CAP 360 pF	223361V
	C207	1	1	1	1	C-CAP 0.022 µF 16V	236223N
	C209	1	1	1	1	C-CAP 0.001 µF 50V	236102K
	C210~212	3	3	3	3	C-CAP 0.022 µF 16V	236223N
	C213	1	1	1	1	C-CAP 82 pF 50V	236820J
	C214	1	1	1	1	C-CAP 0.022 µF 16V	236223N
	C215	1	1	1	1	E-CAP 10 µF 16V	211220S
	C216	1	1	1	1	C-CAP 0.022 µF 16V	236223N
	C217	1	1	1	1	E-CAP 4.7 µF 35V	211415S
	C218	1	1	1	1	E-CAP 0.47 µF 50V	211505S
	C219	1	1	1	1	M-CAP 0.047 µF 50V	222473J
	C220	1	1	1	1	E-CAP 3.3 µF 50V	211513S
	C221	1	1	1	1	M-CAP 0.01 µF 50V	222103J
	C222	1	1	1	1	E-CAP 100 µF 16V	211230S
	C223	1	1	1	1	C-CAP 0.001 µF 50V	236102K
	C224	1	1	1	1	T-CAP 0.47 µF 35V	252405M
	C225	1	1	1	1	M-CAP 0.033 µF 50V	222333J
	C226	1	1	1	1	M-CAP 0.0022µF 50V	222222J
	C227	1	1	1	1	M-CAP 0.068 µF	222683J
	C228,C229	2	2	2	2	C-CAP 0.022 µF 16V	236223N
	CONTROL SECTION						
		1	1	2	2	RT-01T-1.0B	7121750
	IC601	1	1	1	1	IC TC9303AN-001	518292S
	IC602	1	1	1	1	IC TC9177P	518289S
	IC603	1	1	1	1	IC TC4071BP	518250S
	IC604	1	1	1	1	IC TC4069UBP	518140S
	IC605	1	1	1	1	IC TC4030BP	518290S
	IC606	1	1	1	1	IC TC4069UBP	518140S
	IC607	1	1	1	1	IC M74HC04P	518286S
	IC613	-	-	1	1	IC TC4013BAP	ICT0002
	XT601	1	1	1	1	X'TAL 7.200MHz	1281010
	Q601	1	1	1	1	TR 2SC1815	512107S
	Q602	1	1	1	1	FET 2SK246	516043S
	Q603~605	3	3	3	3	TR 2SC1815	512107S
	Q606,607	2	2	2	2	DTR RN1204	512162S
	Q608,609	2	2	2	2	TR 2SA1015	510102S
	Q610	1	1	1	1	DTR RN1204	512162S
	Q611	1	1	1	1	TR 2SA1015	510102S
	Q612,613	2	2	2	2	DTR RN1204	512162S
	Q614	1	1	1	1	FET 2SK246	516043S
	Q615	1	1	1	1	TR 2SA1015	510102S
	Q616	1	1	1	1	TR 2SC1815	512107S
	Q617	1	1	1	1	DTR RN1201	512159S
	Q667	-	-	1	1	DTR RN2204	510146S
	Q668	-	-	1	1	DTR RN1204	512162S
	D601~604	4	4	4	4	D 1S1588	501030S
	D605	-	1	-	1	D 1S1588	501030S
	D606,607	2	-	2	-	D 1S1588	501030S
	D608	1	1	1	1	D 1S1588	501030S
	D609,610	2	2	2	2	D 1SS53	501023S
	D611~622	12	12	12	12	D 1S1588	501030S
	D658	1	1	1	1	D 1S1588	501030S
	D659	-	-	1	1	D 1S1588	501030S
	D674	-	-	1	1	D 1S1558	501030S
	D001	1	1	1	1	D 1S1588	501030S
	D101,102	2	2	2	2	D 1S1588	501030S
	D201	1	1	1	1	D 1S1588	501030S
	R601	1	1	1	1	RES 10K OHM 1/4W 5%	328103J
	R602	1	1	1	1	RES 2.2K OHM 1/4W 5%	328222J
	R603	1	1	1	1	RES 270 OHM 1/4W 5%	328271J
	R604	1	1	1	1	RES 1K OHM 1/4W 5%	328102J
	R605	1	1	1	1	RES 6.8K OHM 1/4W 5%	328682J
	R606	1	1	1	1	RES 47K OHM 1/4W 5%	328473J
	R607	1	1	1	1	RES 2.2K OHM 1/4W 5%	328222J
	R608	1	1	1	1	RES 22K OHM 1/4W 5%	328223J
	R609	1	1	1	1	RES 1K OHM 1/4W 5%	328102J
	R610	1	1	1	1	RES 4.7K OHM 1/4W 5%	328472J
	R611	1	1	1	1	RES 1M OHM 1/4W 5%	328105J
	R612,613	2	2	2	2	RES 100K OHM 1/4W 5%	328104J
	R614	1	1	1	1	RES 1M OHM 1/4W 5%	328105J
	R615	1	1	1	1	RES 100K OHM 1/4W 5%	328104J
	R616	1	1	1	1	RES 1M OHM 1/4W 5%	328105J
	R617~620	4	4	4	4	RES 10K OHM 1/4W 5%	328103J
	R621	1	1	1	1	FP-RES 33 OHM 1/4W	328330L
	R622~624	3	3	3	3	RES 10K OHM 1/4W 5%	328103J
	R626,627	2	2	2	2	RES 10K OHM 1/4W 5%	328103J

www.hifiengine.com

PARTS ORDERING PROCEDURE ..... DO NOT USE THE "REFERENCE" number and "SYMBOL" number. (these are control # for the factory only.) Include in any order:
a. Part number, b. Part despcription, c. Model number. (any of the above lacking from an order may delay shipment of the order.)

KEY NO.	SYMBOL NO.	TYPE+ NR-850 W	NR-850 E	NR-1050 W	NR-1050 E	DESCRIPTION	PART NO.
	R628,629	2	2	2	2	RES 240K OHM 1/4W 5%	RES124401E
	R630,631	2	2	2	2	RES 1K OHM 1/4W 5%	328102J
	R632,633	2	2	2	2	RES 1M OHM 1/4W 5%	328105J
	R634~646	3	3	3	3	RES 100K OHM 1/4W 5%	328104J
	R637	1	1	1	1	RES 47K OHM 1/4W 5%	328473J
	R638	1	1	1	1	RES 1K OHM 1/4W 5%	328102J
	R639	1	1	1	1	RES 47K OHM 1/4W 5%	328473J
	R640	1	1	1	1	RES 10K OHM 1/4W 5%	328103J
	R642	1	1	1	1	RES 10K OHM 1/4W 5%	328103J
	R644,645	2	2	2	2	RES 18K OHM 1/4W 5%	328183J
	R6B4	-	-	1	1	RES 22K OHM 1/4W 5%	328223J
	C601	1	1	1	1	T-CAP 1 µF 35V	252410M
	C602	1	1	1	1	M-CAP 0.033 µF	222333J
	C603	1	1	1	1	T-CAP 0.47 µF 35V	252405M
	C604	1	1	1	1	M-CAP 0.01 µF	222103J
	C605	1	1	1	1	C-CAP 0.001 µF	231102Z
	C606	1	1	1	1	C-CAP 0.01 µF	231103Z
	C607	1	1	1	1	E-CAP 0.22 µF 5.5V	2100340
	C608	1	1	1	1	C-CAP 15 pF	232150C
	C609	1	1	1	1	C-CAP 18 pF	232180C
	C610	1	1	1	1	M-CAP 0.047 µF	222473J
	C611	1	1	1	1	E-CAP 10 µF 16V	211220S
	C613~615	3	3	3	3	M-CAP 0.047 µF	222473J
	C617	1	1	1	1	M-CAP 0.047 µF	222473J
	C618,619	2	2	2	2	E-CAP 10 µF 16V	211220L
	C620	1	1	1	1	E-CAP 1 µF 50V	211510L
	C621	1	1	1	1	E-CAP 1 µF 50V	211510S
	C622	1	1	1	1	E-CAP 10 µF 16V	211220S
	C643	1	1	1	1	E-CAP 1 µF 50V	211510S
	REC SECTION						
	Q806	1	1	1	1	TR 2SC1815	512107S
	ZD819	1	1	1	1	ZD RD27EB3	502086S
	R821	1	1	1	1	RES 3.3K OHM 1/4W 5%	328332J
	C825~827	3	3	3	3	E-CAP 47 µF 50V	211525S
	C828	1	1	1	1	M-CAP 0.047 µF 50V	222473J
	TERMINAL SECTION						
	C123	-	1	-	1	C-CAP 5 pF	232509D
	C124	-	1	-	1	C-CAP 10 pF	232100D
	DISPLAY PWB ASSEMBLY						
		1	1	1	1	DISPLAY PWB	4613520
	CONTROL SECTION						
	IC608	1	1	1	1	IC TC9134P	518281S
	IC609	1	1	1	1	IC TC9185P	518278P
	Q618~638	21	21	21	21	DIR RN2202	510144S
	Q639	1	1	1	1	TR 2SC1815	512107S
	Q640~644	5	5	5	5	DTR RT1N144S	512165S
	X602	1	1	1	1	CER TOP CSB455E	1280990
	D623~656	34	34	34	34	D 1S1588	501030S
	R641	1	1	1	1	RES 100K OHM 1/4W 5%	328104J
	R646	1	1	1	1	RES 47K OHM 1/4W 5%	328473J
	R647~649	3	3	3	3	RES 1K OHM 1/4W 5%	328102J
	R650~652	3	3	3	3	RES 180 OHM 1/4W 5%	328181J
	R653	1	1	1	1	RES 10K OHM 1/4W 5%	328103J
	R654	1	1	1	1	RES 270 OHM 1/4W 5%	328271J
	R655~657	3	3	3	3	RES 10K OHM 1/4W 5%	328103J
	R658	1	1	1	1	RES 680 OHM 1/4W 5%	328681J
	R677~681	5	5	5	5	RES 10K OHM 1/4W 5%	328103J
	R6A7~6B1	5	5	5	5	RES 10K OHM 1/4W 5%	328103J
	C624,625	2	2	2	2	C-CAP 47 pF 50V	232470C
	C626~628	3	3	3	3	C-CAP 0.022 µF 50V	231223Z
	C629	1	1	1	1	E-CAP 10 µF 16V	211220S
	C630	1	1	1	1	C-CAP 390 pF 50V	236391K
	C639~641	3	3	3	3	C-CAP 0.0047µF	236472K
	POWER IND SECTION						
	IC902,903	2	2	2	2	IC IR2E29	518291S
	C905~910	5	5	5	5	E-CAP 10 µF 25V	211320S
	C911,912	2	2	2	2	E-CAP 3.3 µF 35V	211512S
	R918,919	2	2	2	2	RES 10K OHM 1/4W 5%	328103J
	R920,921	2	2	2	2	RES 22K OHM 1/4W 5%	328223J
	R922,923	2	2	2	2	RES 33K OHM 1/4W 5%	328333J
	R924,925	2	2	2	2	RES 390 OHM 1/4W 5%	328391J
	RX PRE AMP SECTION						
	IC612	1	1	1	1	IC µPD1474HA	518272S
	PD601	1	1	1	1	PD TPS703	508001S
	L601,602	2	2	2	2	T-COIL	1211160
	Q665	1	1	1	1	DTR RN1204	512162S
	Q666	1	1	1	1	TR 2SC1815	512107S
	R6A0	1	1	1	1	RES 1K OHM 1/4W 5%	328102J
	R6A1	1	1	1	1	RES 10 OHM 1/4W 5%	328100J
	R6A2	1	1	1	1	RES 22K OHM 1/4W 5%	328223J
	R6A3	1	1	1	1	RES 47K OHM 1/4W 5%	328473J
	R6A4	1	1	1	1	RES 4.7K OHM 1/4W 5%	328472J
	R6A5	1	1	1	1	RES 680 OHM 1/4W 5%	328681J
	R6A6	1	1	1	1	RES 10K OHM 1/4W 5%	328103J
	C634~636	3	3	3	3	E-CAP 10 µF 16V	211220S
	C637	1	1	1	1	M-CAP 0.033 µF	222333K

KEY NO.	SYMBOL NO.	TYPE+ NR-850 W	NR-850 E	NR-1050 W	NR-1050 E	DESCRIPTION	PART NO.
	C638	1	1	1	1	E-CAP 47 µF 6.3V	211025S
	POWER SW SECTION						
	TSW630	1	1	1	1	TACT SW	4060130
	STAND-BY LED SECTION						
	LD977	1	1	1	1	LED SLP-275B	5061130
	SELECT DISPLAY SECTION						
	D662~667	6	6	6	6	D 1S1588	501030S
	Q657	1	1	1	1	TR 2SA1015	510102S
	Q658~664	7	7	7	7	TR 2SC1815	512107S
	LD956~960	5	5	5	5	LED SLP-438C-50	5061100
	LD961~971	11	11	11	11	LED SLP-938C-50	5061160
	LD972	1	1	1	1	LED SLP-438C-50	5061100
	LD973~975	3	3	3	3	LED SLP-981C-50	5061110
	LD976	-	-	1	1	LED SLP-981C-50	5061110
	TSW622~629	8	8	8	8	TACT SW	4060130
	R672~676	5	5	5	5	RES 1.8K OHM 1/4W 5%	328182J
	R682~686	5	5	5	5	RES 47K OHM 1/4W 5%	328473J
	R687	1	1	1	1	RES 1.8K OHM 1/4W 5%	328182J
	R689	1	1	1	1	RES 10K OHM 1/4W 5%	328103J
	R690~695	6	6	6	6	RES 180 OHM 1/4W 5%	328181J
	R696~699	4	4	4	4	RES 3.3K OHM 1/4W 5%	328332J
	R6B2	1	1	1	1	RES 10K OHM 1/4W 5%	328103J
	R6B3	1	1	1	1	RES 1.5K OHM 1/4W 5%	328152J
	C632	1	1	1	1	C-CAP 0.001 µF	236102K
	C642	1	1	1	1	C-CAP 100 pF	236101J
	MAIN DISPLAY SECTION						
	IC610	1	1	1	1	IC TC9186P	518279S
	IC611	1	1	1	1	IC TC9174P	518288S
	IC901	1	1	1	1	IC LB1423N	518256S
	Q645~648	4	4	4	4	DTR RT1P44S	510149S
	Q649~654	6	6	6	6	TR 2SC1815	512107S
	Q655,656	2	2	2	2	DTR RN2204	510146S
	FTP601	1	1	1	1	FIP 7D8F	5890030
	TSW601~621	21	21	21	21	TACT SW	4060130
	TSW631	-	-	1	1	TACT SW	4060130
	LD901~915	15	15	15	15	LED SLP-238C-50P	5061170
	LD916~918	3	3	3	3	LED SLP-438C-50	5061100
	LD919	1	1	1	1	LED SLP-938C-50	5061160
	LD920~925	5	5	5	5	LED SLP-438C-50	5061100
	LD926	1	1	1	1	LED SLP-938C-50	5061160
	LD927~932	6	6	6	6	LED SLP-438C-50	5061100
	LD933	1	1	1	1	LED SLP-938C-50	5061160
	LD934~936	3	3	3	3	LED SLP-438C-50	5061100
	LD937~941	5	5	5	5	LED SLP-238C-50P	5061170
	LD942	1	1	1	1	LED SLP-938C-50	5061160
	LD943~952	10	10	10	10	LED TLY-163	5060870
	LD953	1	1	1	1	LED SLP-981C-50	5061110
	LD954,955	2	2	2	2	LED SLP-938C-50	5061160
	LD978	1	1	1	1	LED SLP-438C-50	5061100
	D659~661	3	3	3	3	D 1S1588	501030S
	D668~673	6	6	6	6	D 1S1588	501030S
	R659~662	4	4	4	4	RES 270 OHM 1/4W 5%	328271J
	R663	1	1	1	1	RES 47K OHM 1/4W 5%	328473J
	R664~667	4	4	4	4	RES 10K OHM 1/4W 5%	328103J
	R668	1	1	1	1	RES 680 OHM 1/4W 5%	328681J
	R669~671	3	3	3	3	RES 3.3K OHM 1/4W 5%	328332J
	R914	1	1	1	1	RES 1.2K OHM 1/4W 5%	328122J
	R915	1	1	1	1	RES 2.2K OHM 1/4W 5%	328222J
	R916	1	1	1	1	RES 10K OHM 1/4W 5%	328103J
	R917	1	1	1	1	RES 4.7K OHM 1/4W 5%	328472J
	R926	1	1	1	1	RES 100 OHM 1/4W 5%	328101J
	R927	1	1	1	1	RES 680 OHM 1/4W 5%	328681J
	C631	1	1	1	1	C-CAP 390 pF 50V	236391K
	C633	1	1	1	1	E-CAP 47 µF 16V	211225S
	C913	1	1	1	1	E-CAP 10 µF 16V	211220S
	POWER SW PWB ASSEMBLY						
		1	1	1	1	POWER SW PWB	463251A
		-	2	-	2	MIDGET FUSE HOLD	7050570
⚠	RY801	1	-	1	-	RELAY AJR32117	1700570
⚠	RY801	-	1	-	1	RELAY G2R1117P-FD-V	1700600
⚠	CP001	1	-	-	-	BREAKER NW-3P-1 6.3A	4901180
⚠	CP001	-	-	1	-	BREAKER NW-2S(N) 8A	4900910
	Q804	1	1	1	1	TR 2SC1815	512107S
	Q805	1	1	1	1	TR 2SC1627	511017S
	D809~812	4	4	4	4	D SR 1FM-2	560018S
	D813	1	1	1	1	D 1S2471	501035S
⚠	R001	1	-	1	-	RES 2.2M OHM 1/2W 5%	239225J
	R819	1	1	1	1	FP-RES 22 OHM 1/2W	329220L
	R820	1	1	1	1	RES 10K OHM 1/4W 5%	328103J
	R822	1	1	1	1	RES 47K OHM 1/4W 5%	328473J
	R823	1	1	1	1	RES 1.5K OHM 1/4W 5%	328152J
⚠	C001	1	1	1	1	C-CAP 0.01 µF	239103B
	C820	1	1	1	1	C-CAP 0.01 µF	231103Z
	C821	1	1	1	1	E-CAP 470 µF 25V	211335S
	C822	1	1	1	1	M-CAP 0.01 µF	222103K
	C823	1	1	1	1	E-CAP 100 µF 10V	211130S
	C824	1	1	1	1	M-CAP 0.01 µF	222103K

www.hifiengine.com

CIRCUITS DATA

INTEGRATED CIRCUITS STK4040XI/4044XI

FUNCTION/MANUFACTURER

■ **Dual Audio Power Amplifier Output Stage/Sanyo**

Series Name	Operational Characteristics Po max/RL=8 Ω f=20 ~ 20 kHz		
		THD	THD
	Wmin	VG=26 dB %	VG=40 dB %
STK4040 XI	70	0.003	0.008
STK4044 XI	100	0.003	0.008

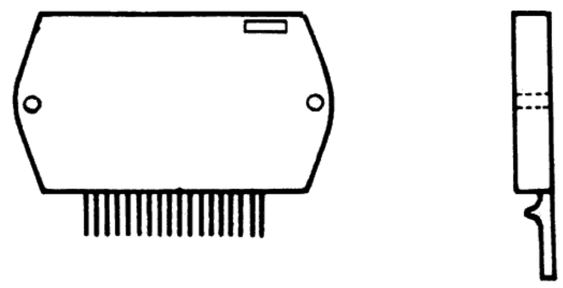

EXTERNAL VIEW

STK4040XI

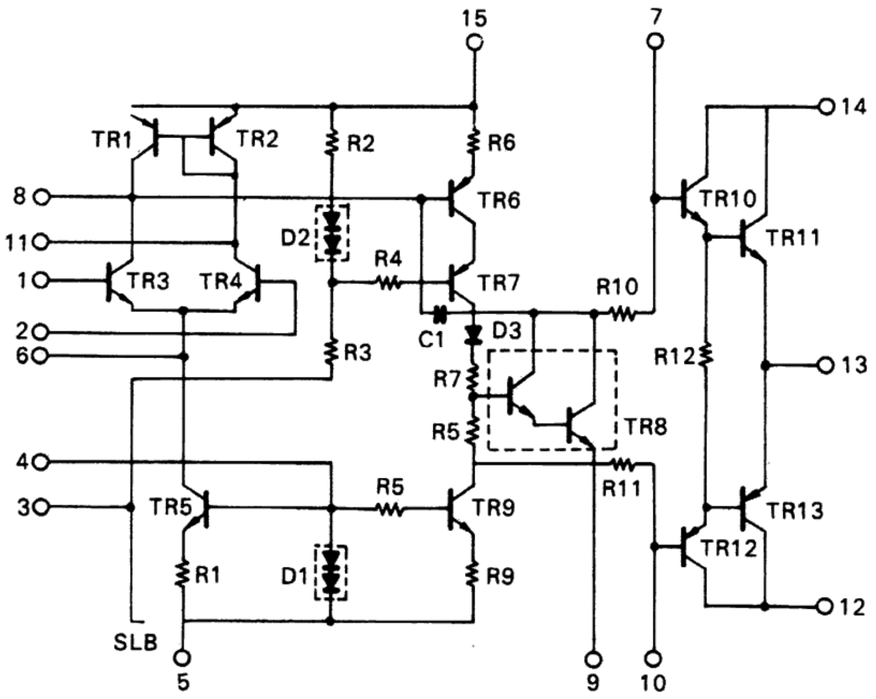

STK4044XI

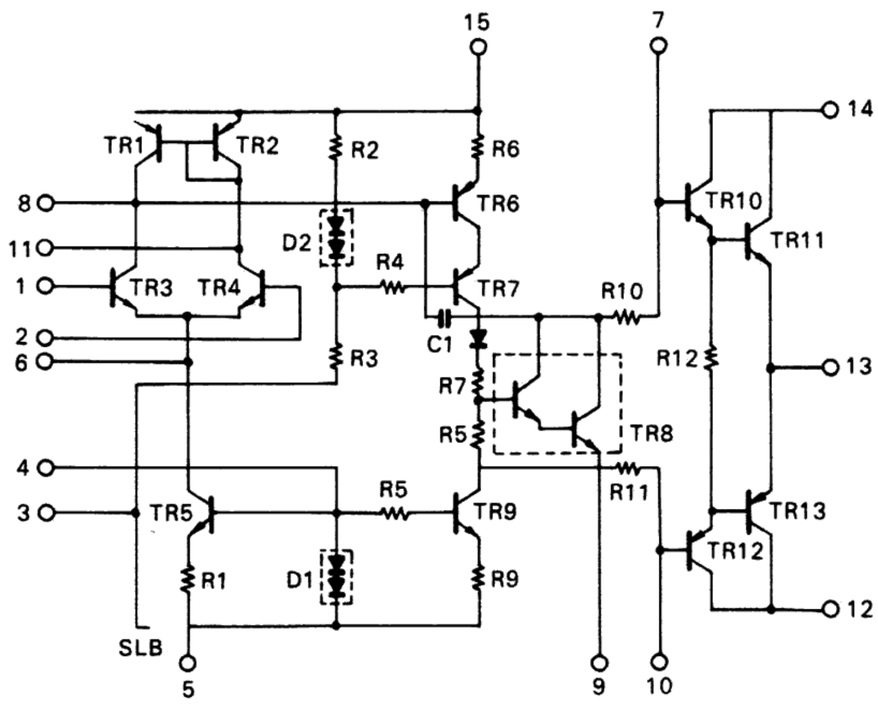

EQUIVALENT CIRCUIT

INTEGRATED CIRCUIT LB1423N

FUNCTION/MANUFACTURER

■ **LEVEL METER DRIVE/Sanyo**

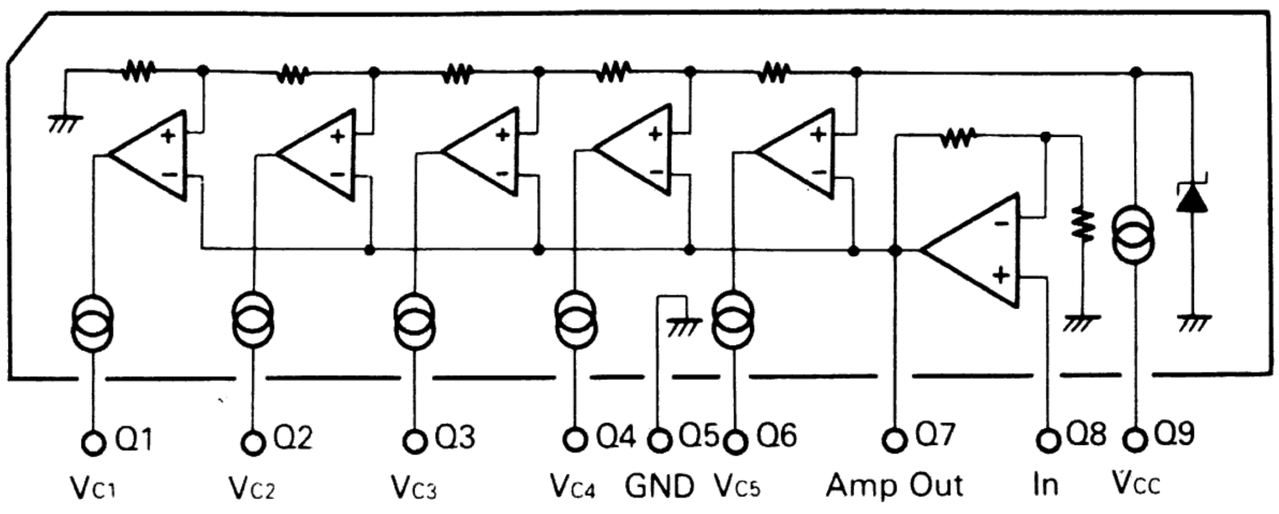

Absolute Maximum Ratings (Ta=25°C)

Vcc max	18	V
Pd max	1100	mW
Topg	−25~+75	°C
Tstg	−55~+125	°C

www.hifiengine.com

INTEGRATED CIRCUIT TC9172P

FUNCTION/MANUFACTURER

■ PLL-LSI System/Toshiba

BLOCK DIAGRAM AND CONNECTION INFORMATION

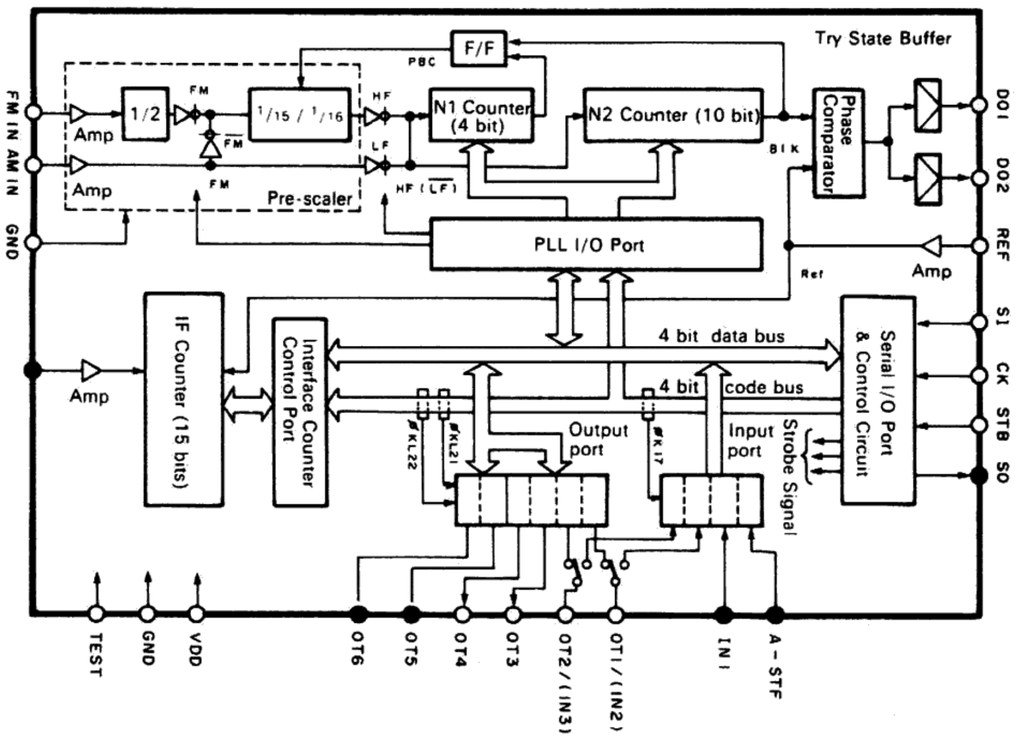

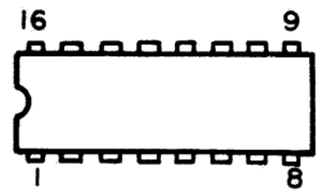

(TOP VIEW)

INTEGRATED CIRCUIT TC4066BP

FUNCTION/MANUFACTURER

■ Quad Analog Switch/Toshiba

EQUIVALENT CIRCUIT

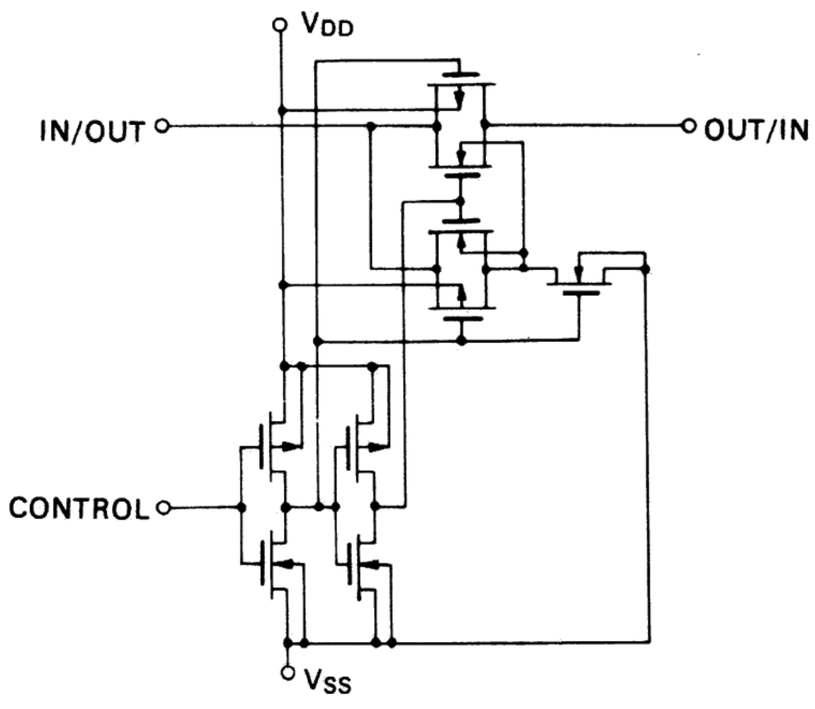

BLOCK DIAGRAM (TOP VIEW)

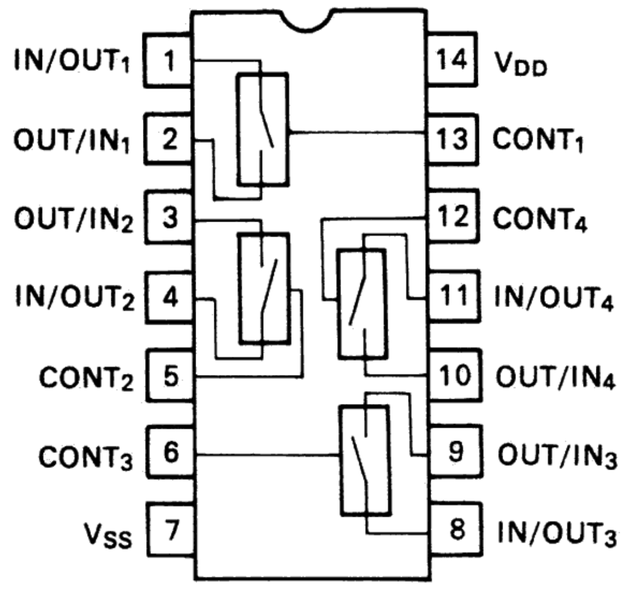

(TOP VIEW)

INTEGRATED CIRCUIT TA75559P

FUNCTION/MANUFACTURER

■ Dual Operation Amplifier/Toshiba

EQUIVALENT CIRCUIT

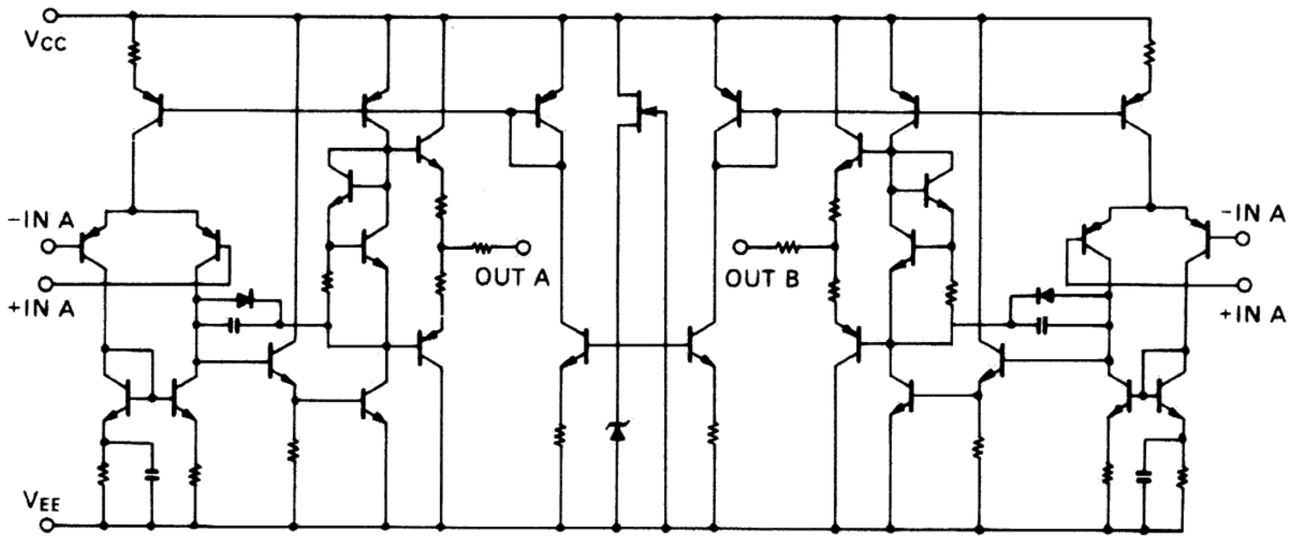

BLOCK DIAGRAM (TOP VIEW)

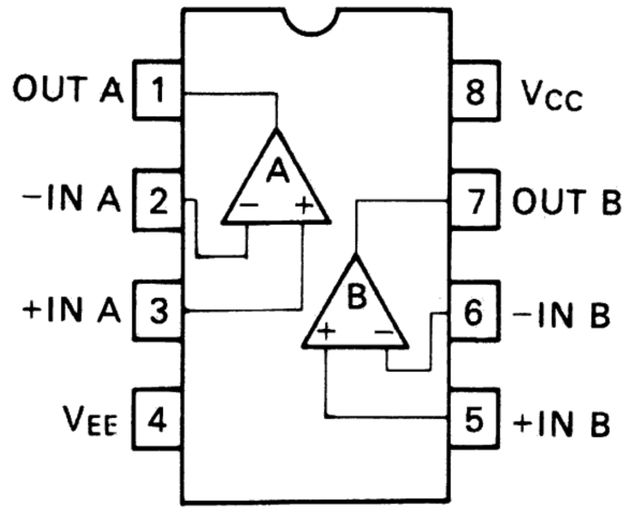

www.hifiengine.com

INTEGRATED CIRCUIT TC4069UBP

FUNCTION/MANUFACTURER
■ **HEX INVERTER/Toshiba**
BLOCK DIAGRAM & CONNECTION INFORMATION

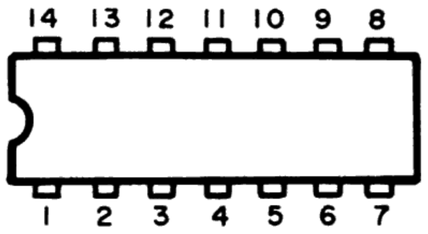

(TOP VIEW)

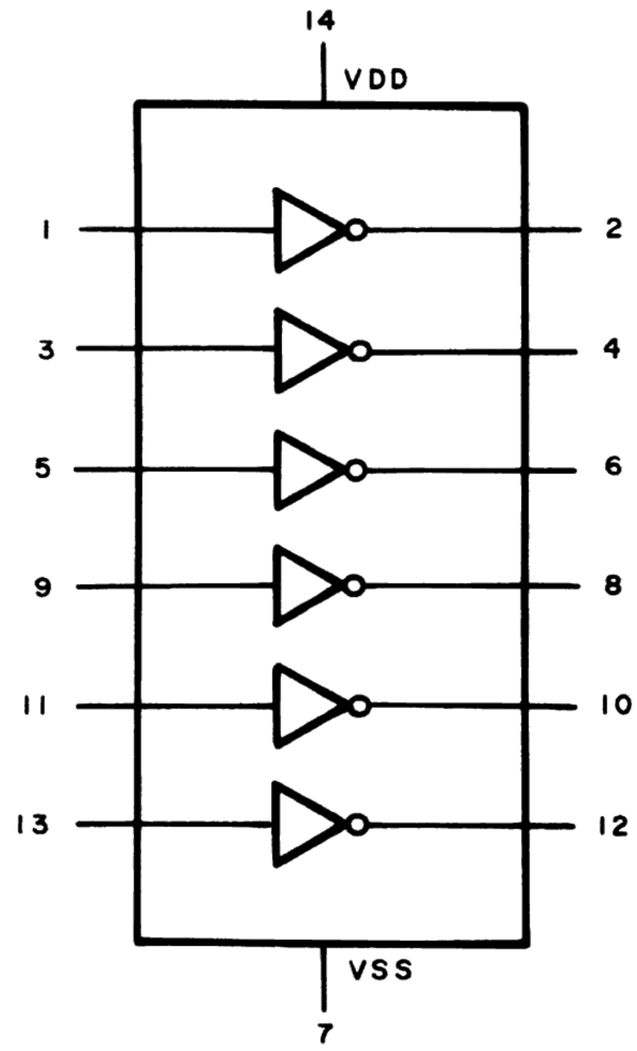

INTEGRATED CIRCUITS BA4558DX

FUNCTION/MANUFACTURER
■ **Dual Operational Amplifier/Rohm**

EQUIVALENT CIRCUIT

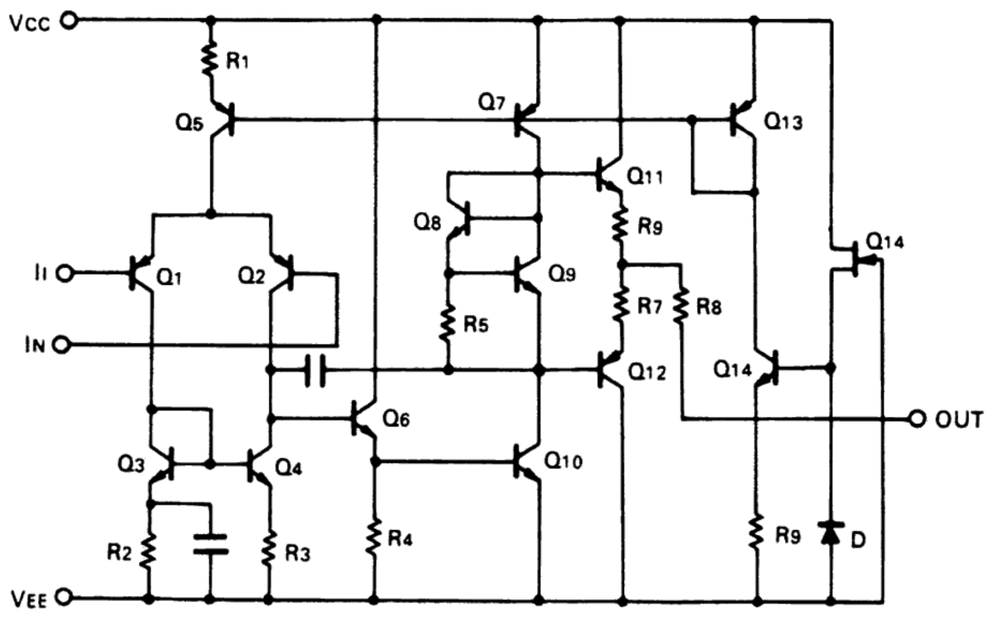

BLOCK DIAGRAM (TOP VIEW)

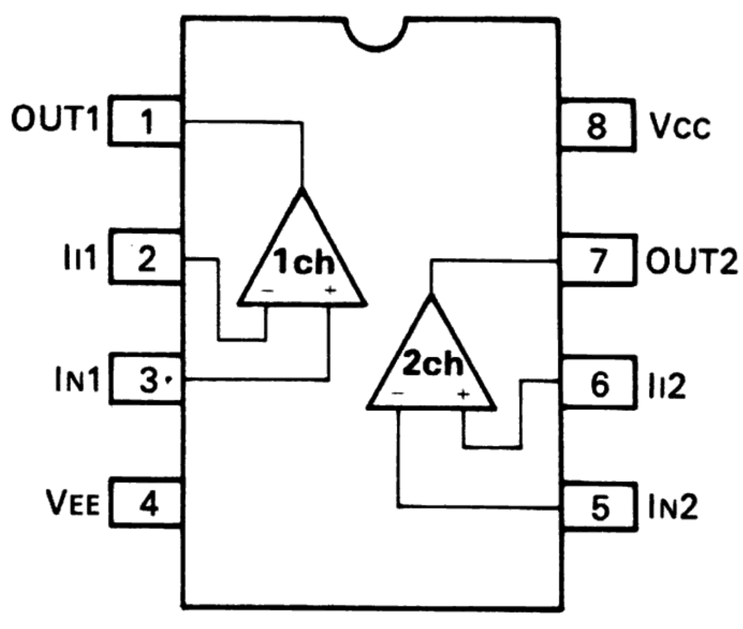

INTEGRATED CIRCUIT TC4013BP

FUNCTION/MANUFACTURER
■ **DUAL D-TYPE FLIP FLOP/Toshiba**
BLOCK DIAGRAM & CONNECTION INFORMATION

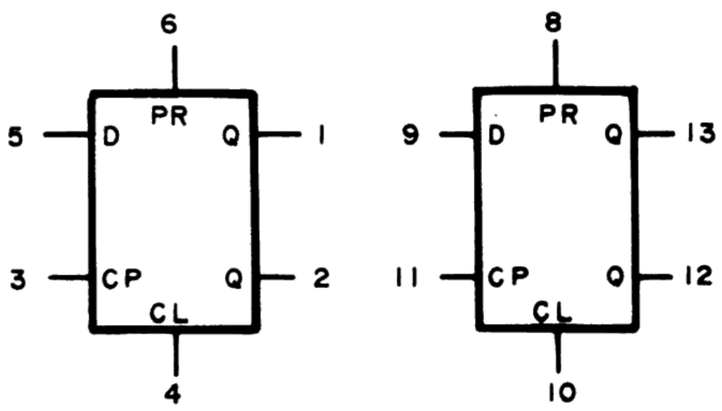

VDD : 14 , VSS : 7

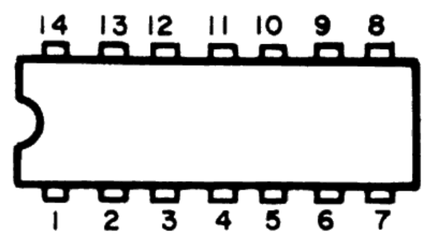

www.hifiengine.com

INTEGRATED CIRCUIT TC9176P

FUNCTION/MANUFACTURER

■ High Performance Electronic Volume/Toshiba

BLOCK DIAGRAM & CONNECTION INFORMATION

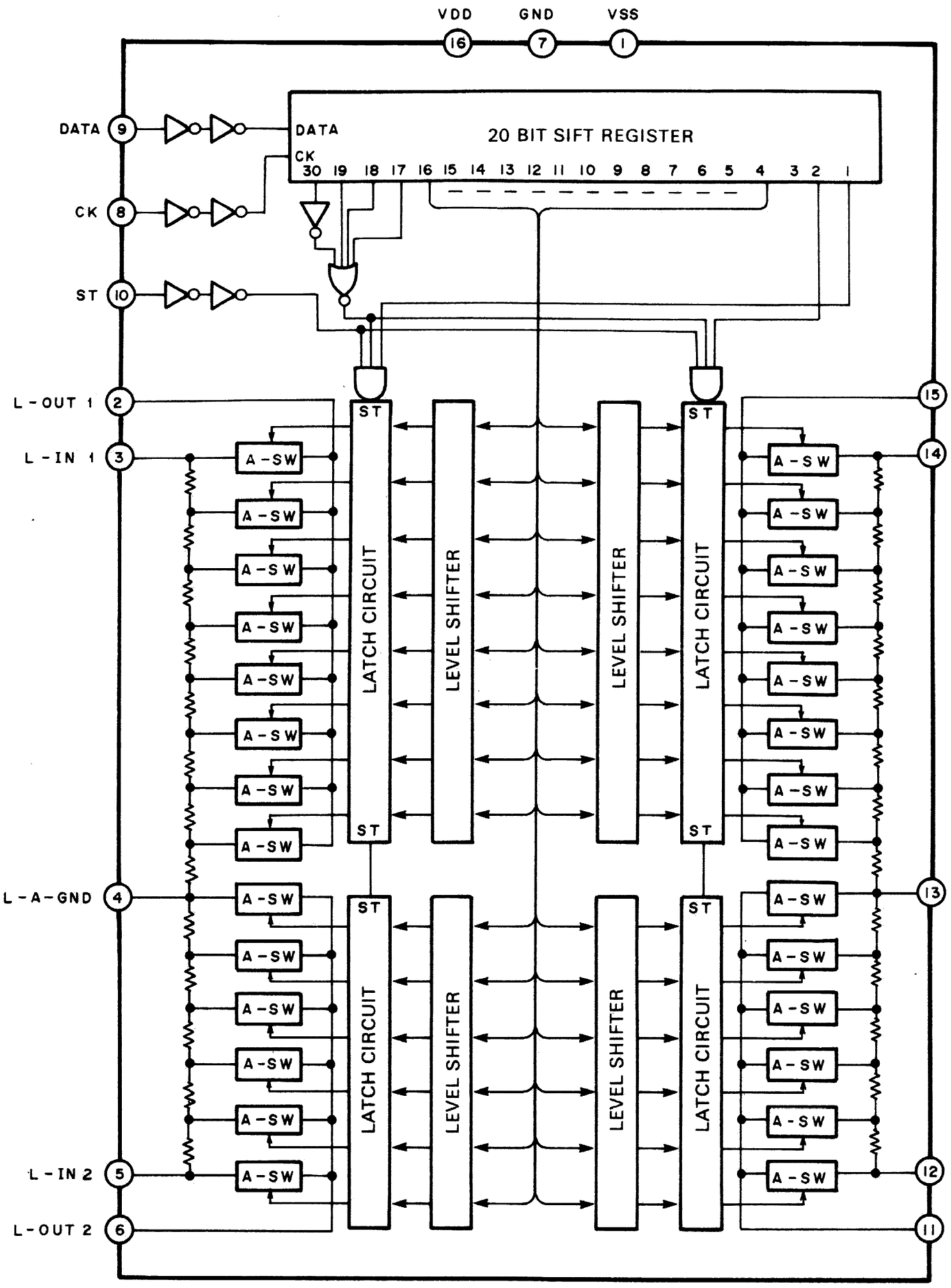

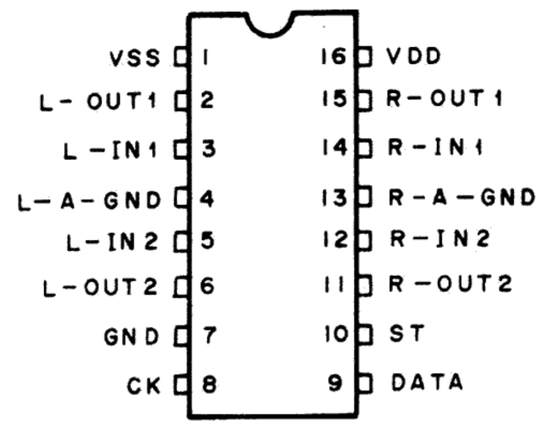

(TOP VIEW)

www.hifiengine.com

INTEGRATED CIRCUIT TC9194P

FUNCTION/MANUFACTURER

■ High Performance Electronic Control/Toshiba

BLOCK DIAGRAM & CONNECTION INFORMATION

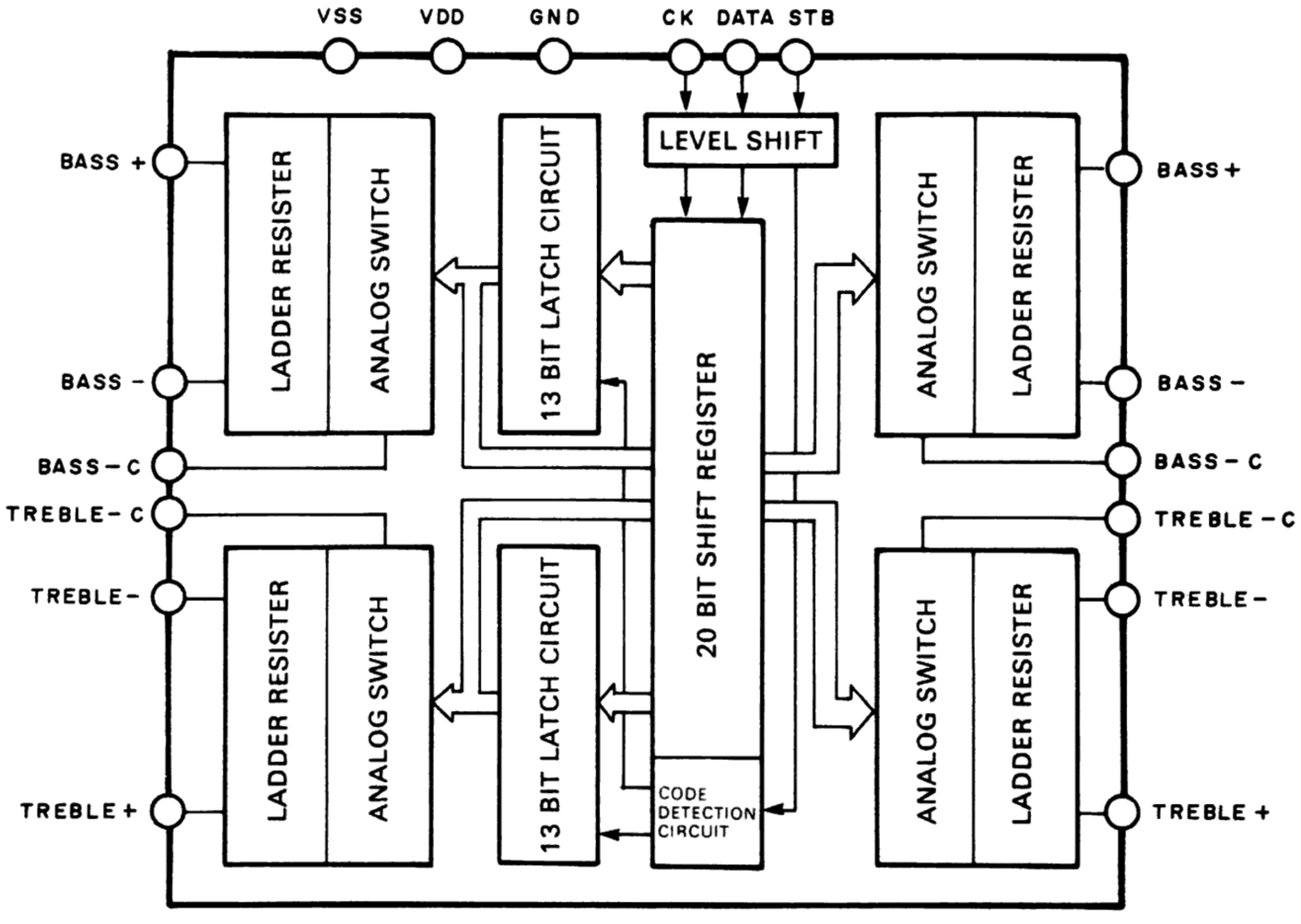

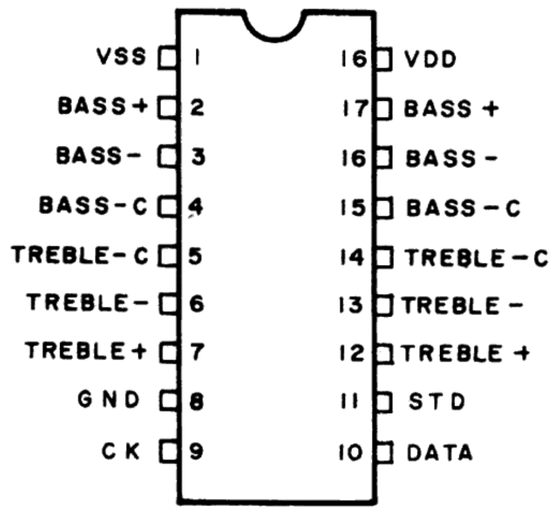

(TOP VIEW)

INTEGRATED CIRCUIT TC9185P

FUNCTION/MANUFACTURER

■ Electronic Volume Control/Toshiba

BLOCK DIAGRAM & CONNECTION INFORMATION

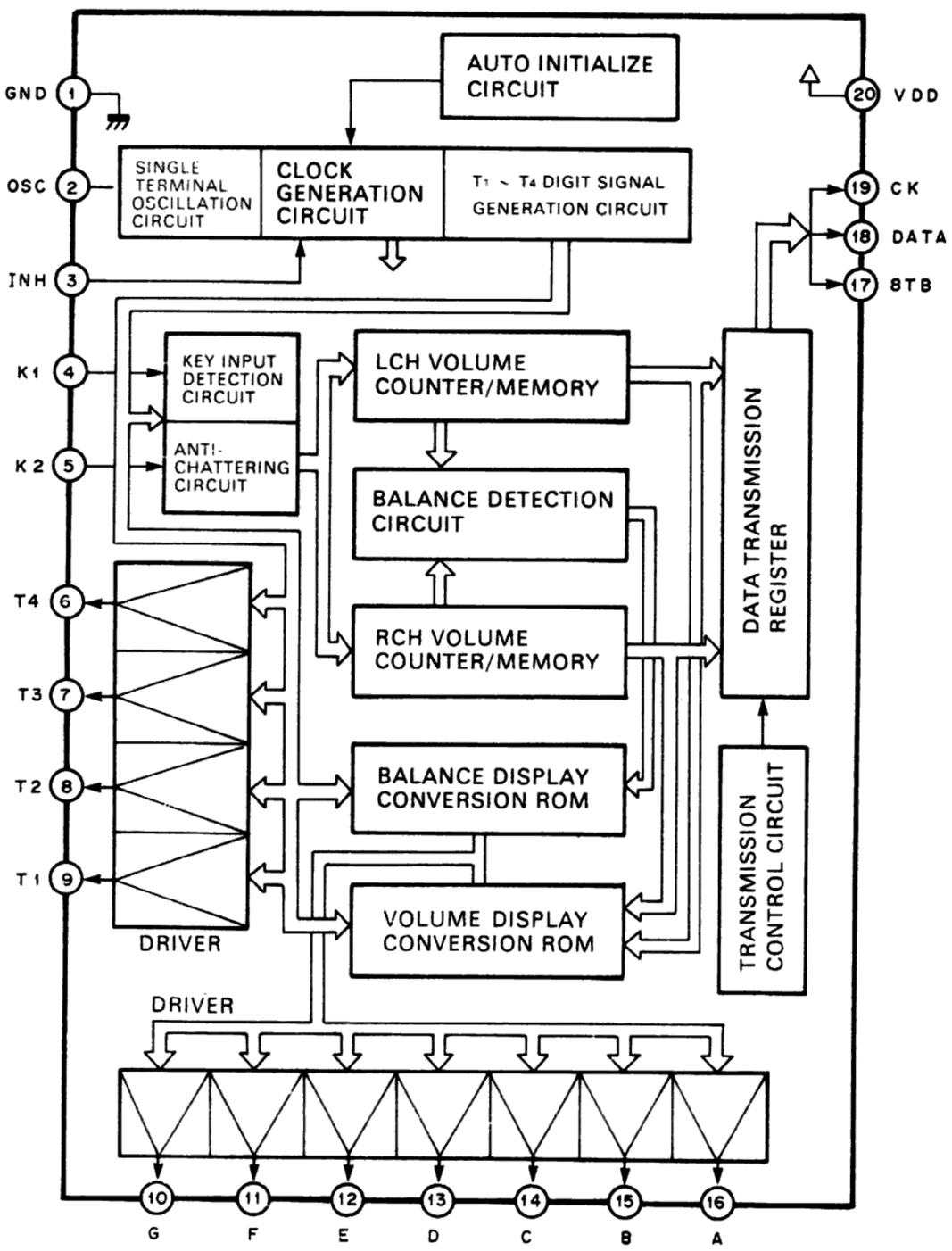

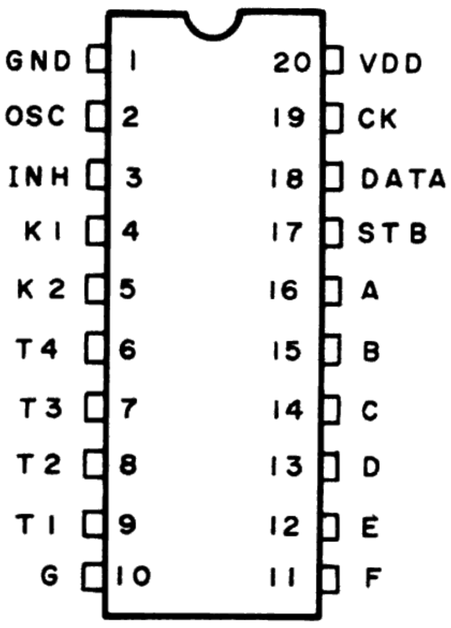

(TOP VIEW)

www.hifiengine.com

INTEGRATED CIRCUIT TC9186P

FUNCTION/MANUFACTURER

■ Electronic Tone Control/Toshiba

BLOCK DIAGRAM & CONNECTION INFORMATION

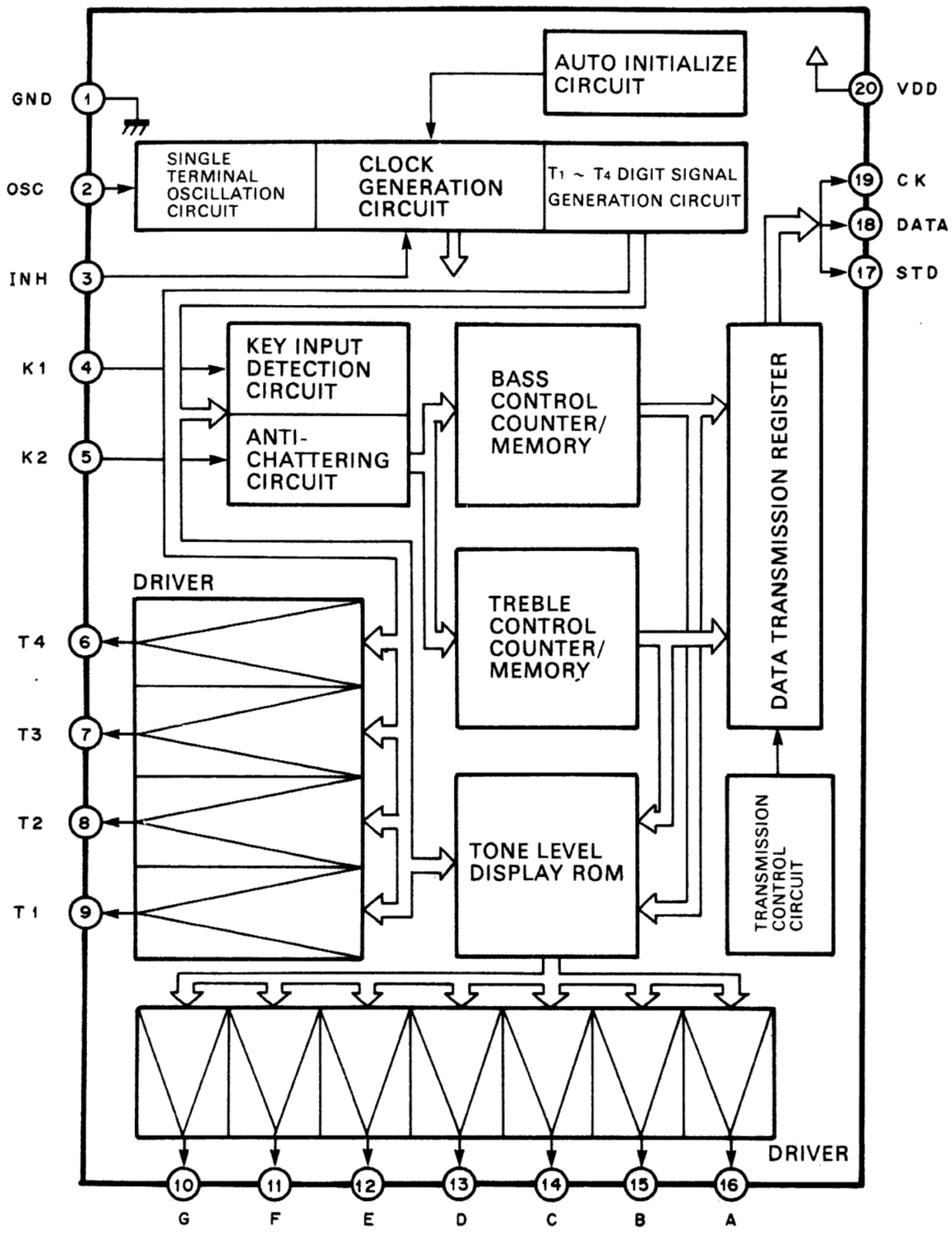

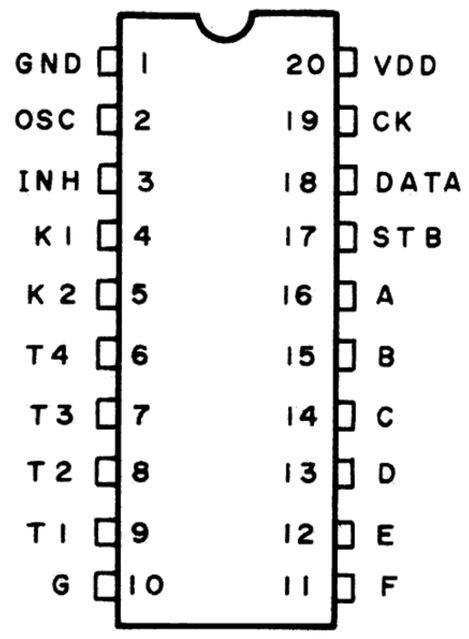

(TOP VIEW)

INTEGRATED CIRCUIT LA1245

FUNCTION/MANUFACTURER

■ AM Tuner System/Sanyo

BLOCK DIAGRAM & CONNECTION INFORMATION

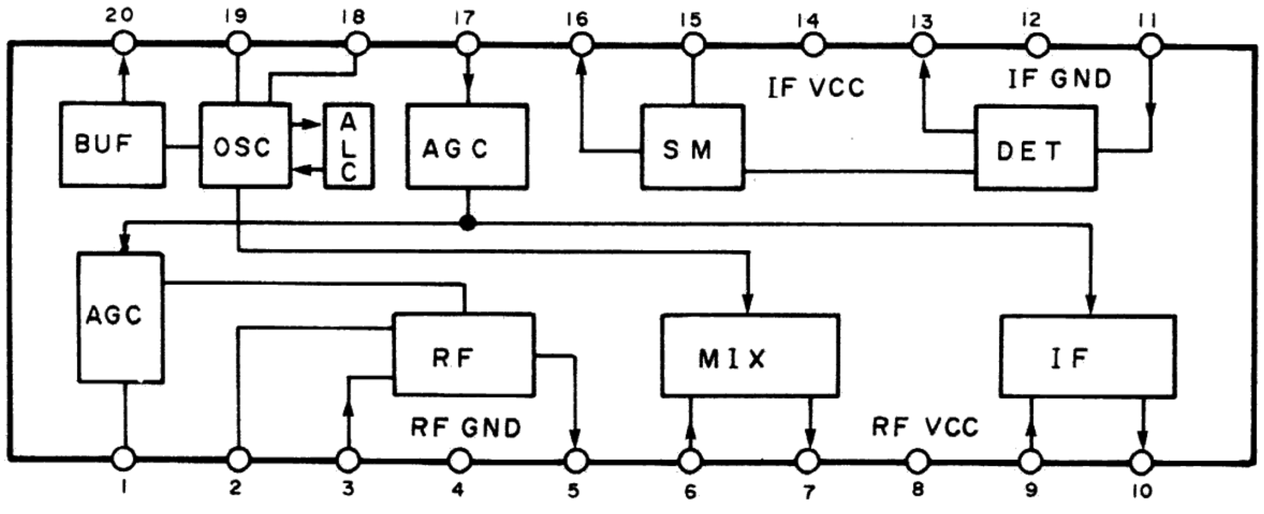

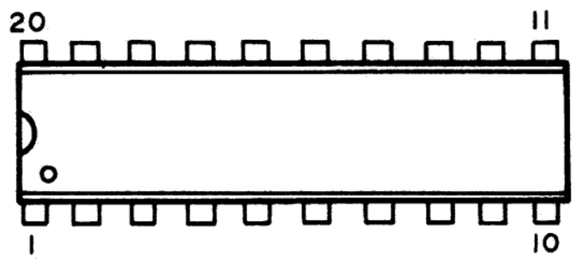

(TOP VIEW)

www.hifiengine.com

INTEGRATED CIRCUIT TC9134P

FUNCTION/MANUFACTURER

■ 32-Function Remote Controller Reception/Toshiba

BLOCK DIAGRAM & CONNECTION INFORMATION

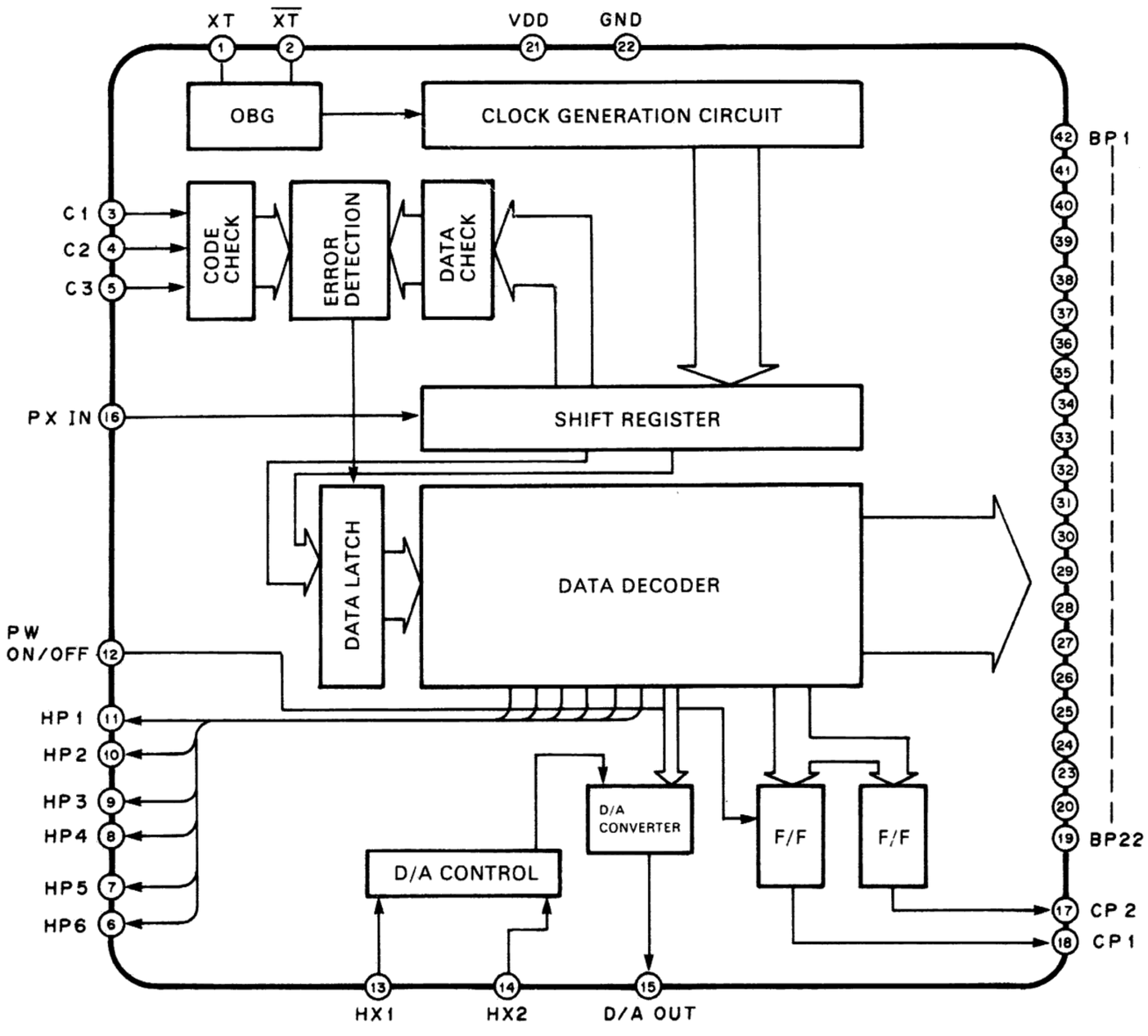

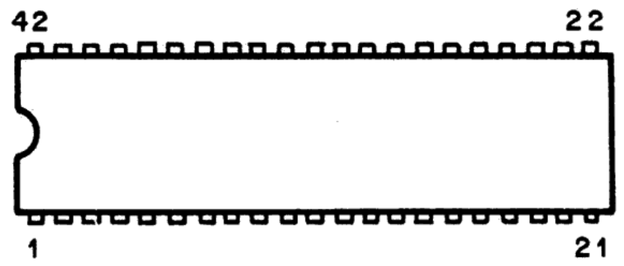

(TOP VIEW)

INTEGRATED CIRCUIT LA3410

FUNCTION/MANUFACTURER

■ FM MPX Demodulator/Sanyo

BLOCK DIAGRAM & CONNECTION INFORMATION

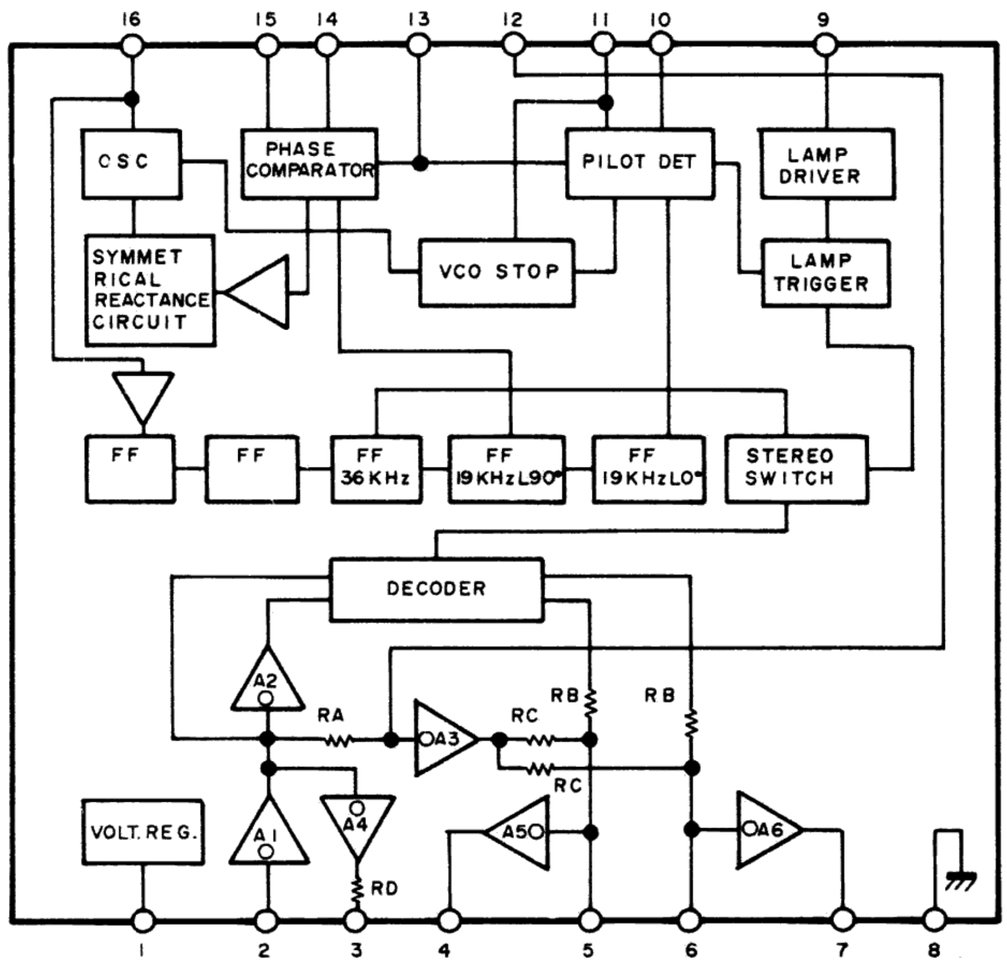

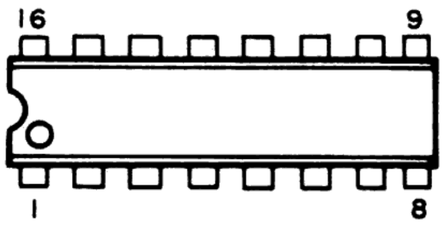

(TOP VIEW)

www.hifiengine.com

LSI TC9303AN-001

FUNCTION/MANUFACTURER
■ TUNING CONTROLLER/Toshiba

PIN DESCRIPTION

PIN #	SYMBOL	NAME AND FUNCTION
1	GND	0 V Power Supply
2	K_0	Key Return Signal Inputs
3	K_1	
4	K_2	
5	K_3	
6	D_0	Digit Outputs
7	D_1	
8	D_2	
9	D_3	
10	D_4	
11	D_5	
12	D_6	
13	a	Segment Outputs
14	b	
15	c	
16	d	
17	e	
18	f	
19	g	
20	h	
21	$-V_{FL}$	— Power Supply
22	P3-1	I/O Port
23	P3-2	
24	P3-3	
25	P3-4	
26	P2-1	
27	P2-2	
28	P2-3	
29	P2-4	
30	P1-2	
31	MUTE	Muting Output
32	TEST	Test Mode Input
33	STB	Serial Interface
34	CK	
35	SO	
36	SI	
37	REF	Criteria Frequency Signal Output
38	$\overline{INT}$	Initialize Input
39	$\overline{INH}$	In-bit Input
40	$\overline{X_T}$	Crystal Oscillator Inputs
41	X_T	
42	V_{DD}	Power Supply

www.hifiengine.com

Maximum Ratings (Ta=25°C)

Item	Simbol	Rating	Units
Supply Voltage	V_{DD}	−0.3~6.0	V
Input Voltage	V_{IN}	−0.3~V_{DD}+0.3	V
Power Consumption	F_D	800	mW
Operating Temperature	T_{opr}	−30~75	°C
Storage Temperature	T_{stg}	−55~125	°C
Open Drain Output Proof	V_{BDS}	35 (Voltage between drain and source)	V
Key Input Voltage	V_{INK}	−V_{FL}−0.3~V_{DD}+0.3	V

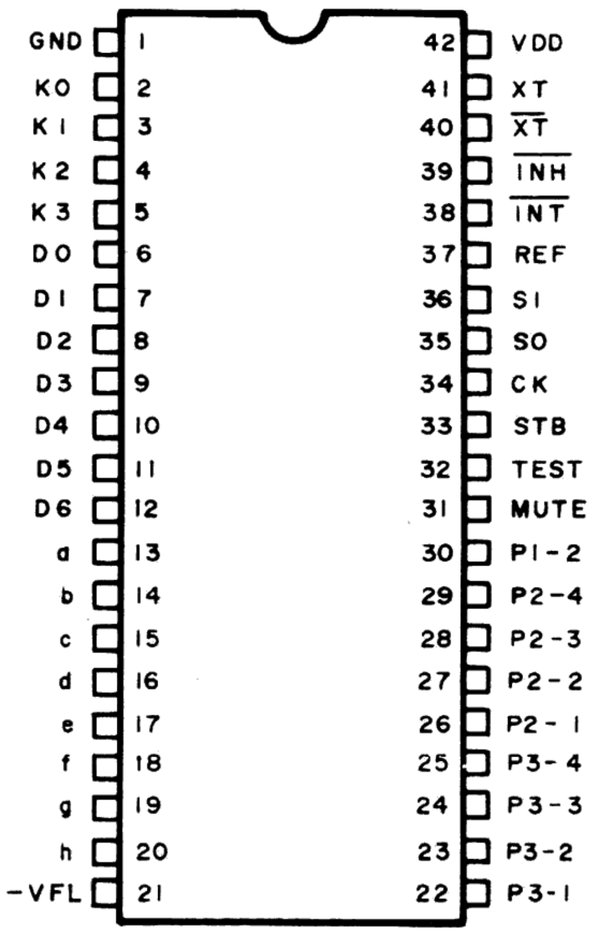

PIN CONNECTION (TOP VIEW)

INTEGRATED CIRCUIT TC9174P

FUNCTION/MANUFACTURER

■ I/O Port Expansion Interface/Toshiba

BLOCK DIAGRAM & CONNECTION INFORMATION

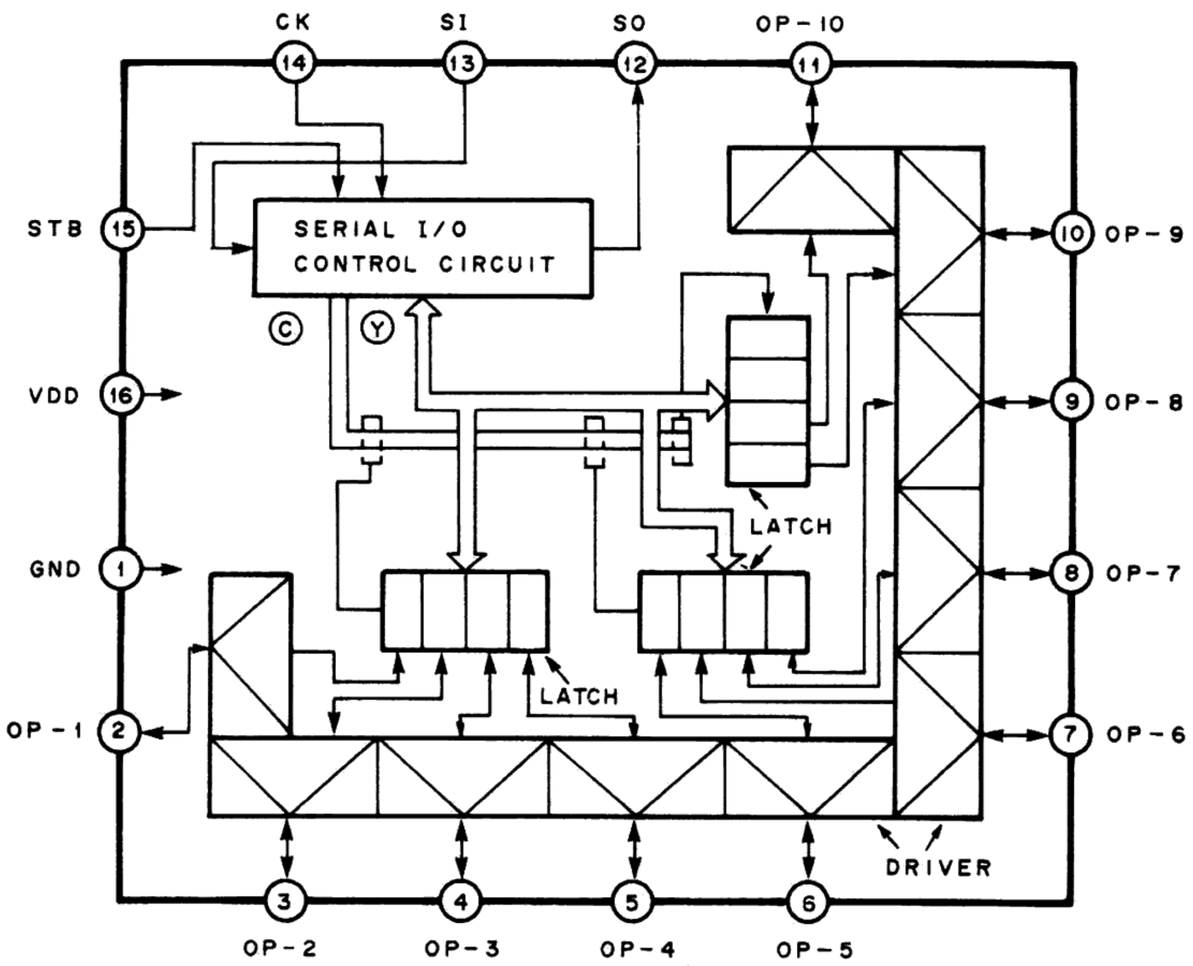

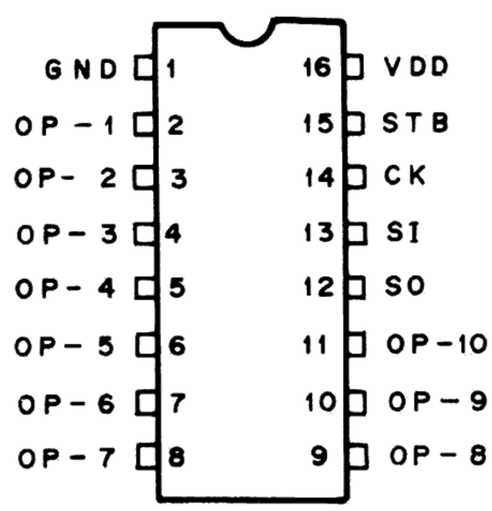

(TOP VIEW)

www.hifiengine.com

INTEGRATED CIRCUIT BA401

FUNCTION/MANUFACTURER
■ FM-IF Amplifier/Rohm
EQUIVALENT CIRCUIT AND CONNECTION INFORMATION

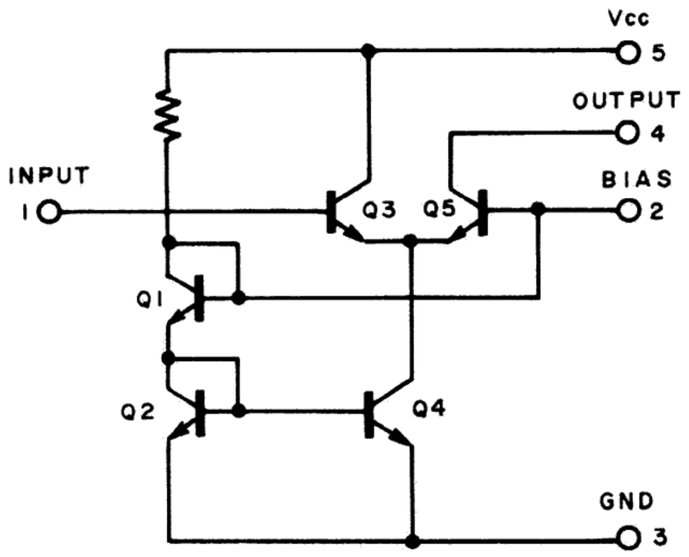

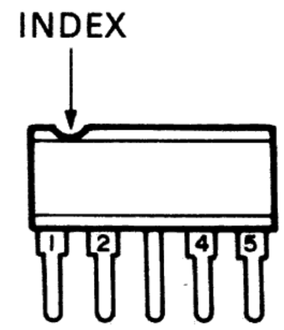

(SIDE VIEW)

INTEGRATED CIRCUIT μHA11225

FUNCTION/MANUFACTURER
■ FM-IF System/Hitachi
BLOCK DIAGRAM & CONNECTION INFORMATION

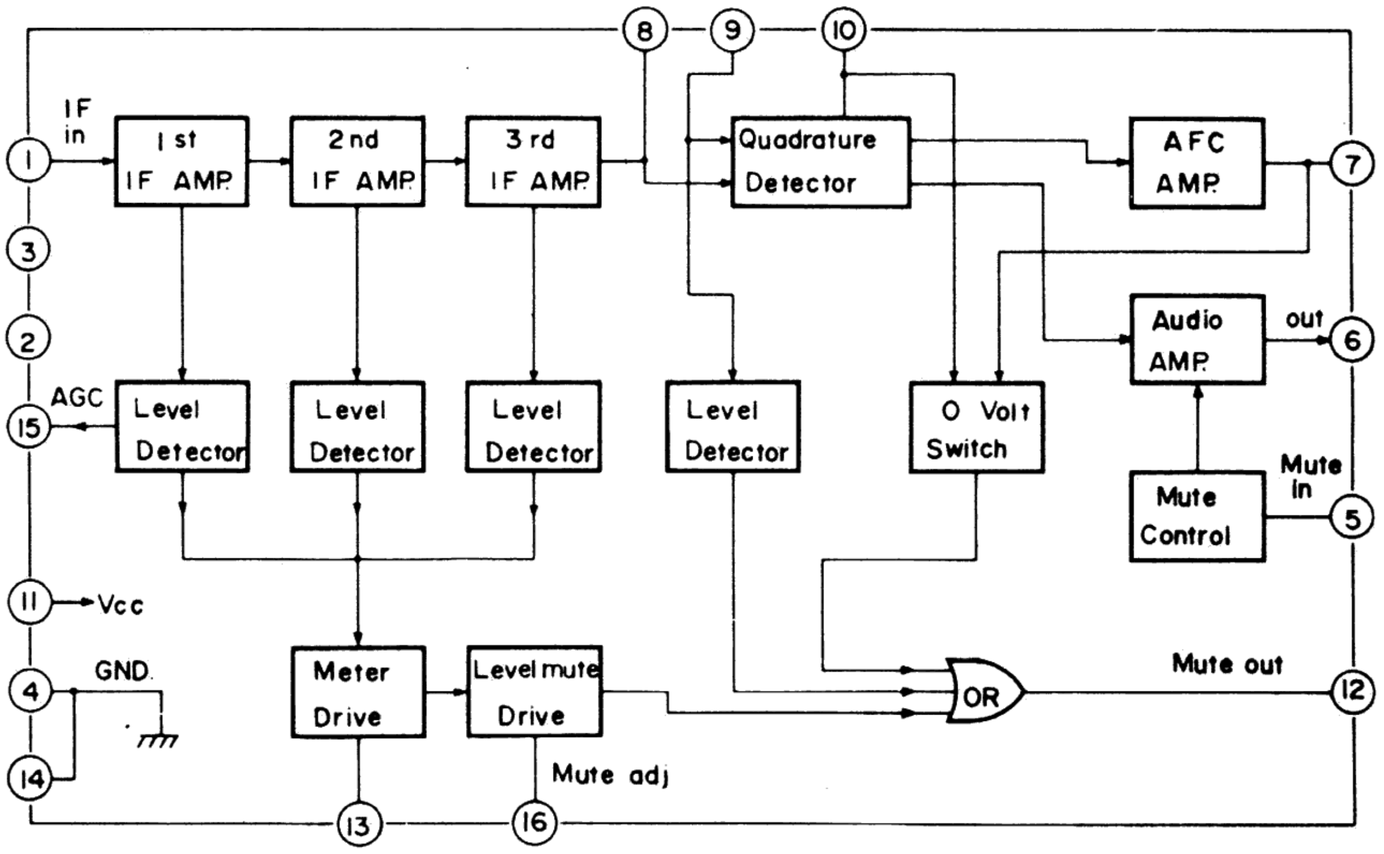

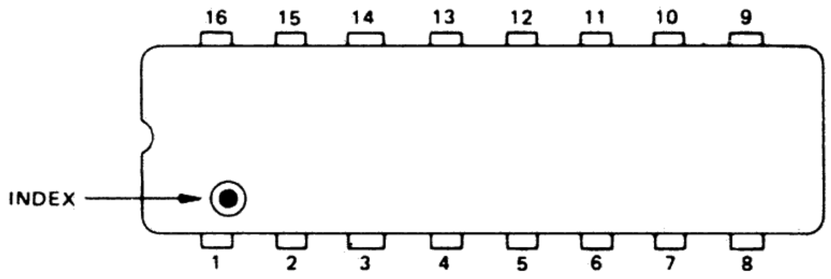

(TOP VIEW)

www.hifiengine.com

INTEGRATED CIRCUIT TC4030BP

FUNCTION/MANUFACTURER
■ **Quad Exclusive or Gate/Toshiba**
EQUIVALENT CIRCUIT & CONNECTION INFORMATION

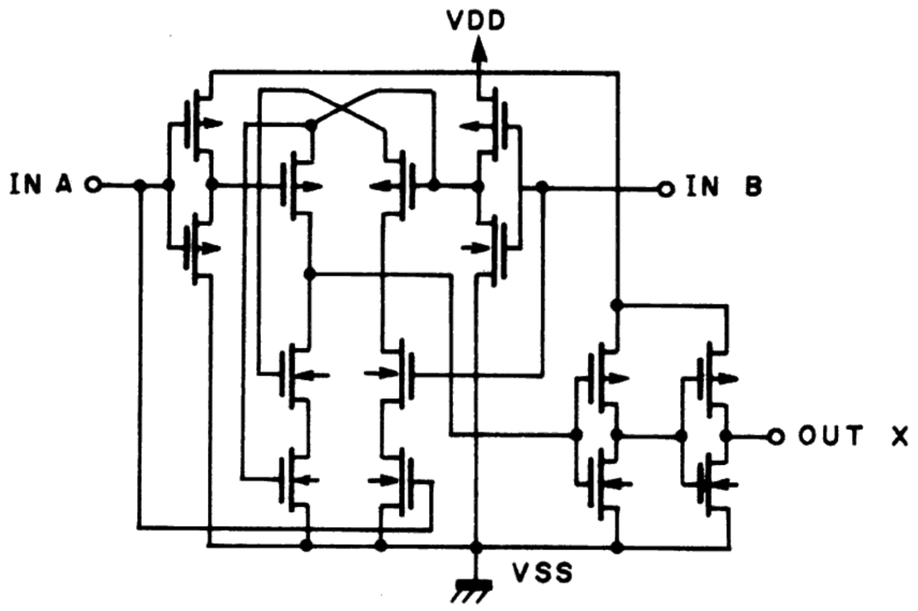

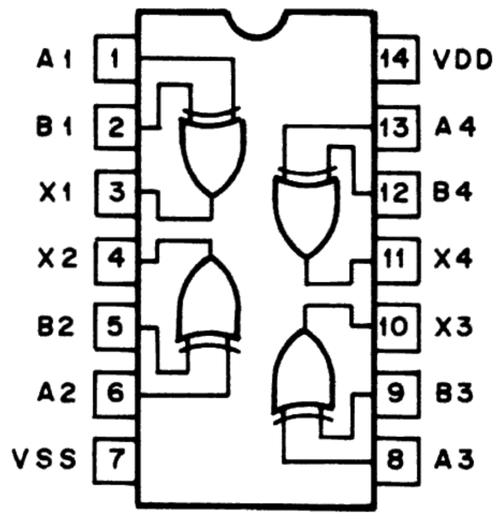

(TOP VIEW)

INTEGRATED CIRCUIT TC4071BP

FUNCTION/MANUFACTURER
■ **Quad 2 Input or Gate/Toshiba**
EQUIVALENT CIRCUIT & CONNECTION INFORMATION

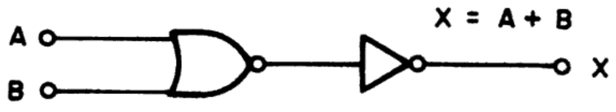

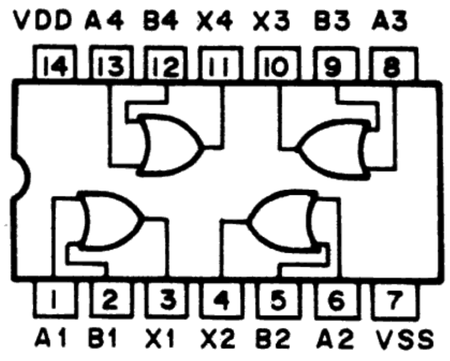

(TOP VIEW)

INTEGRATED CIRCUIT M74HC04P

FUNCTION/MANUFACTURER
■ **Hex Inverter/Mitsubishi**
EQUIVALENT CIRCUIT & CONNECTION INFORMATION

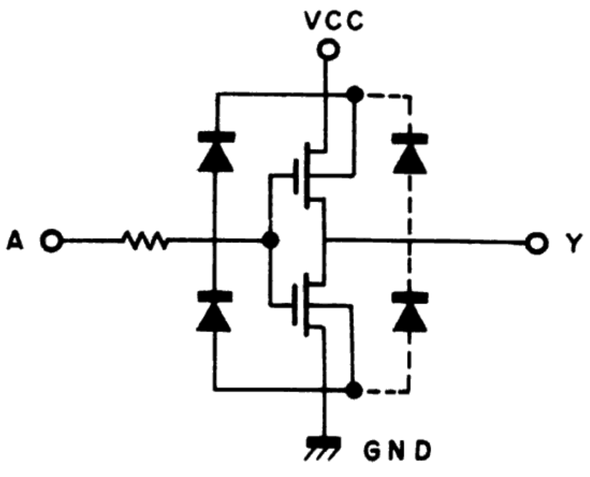

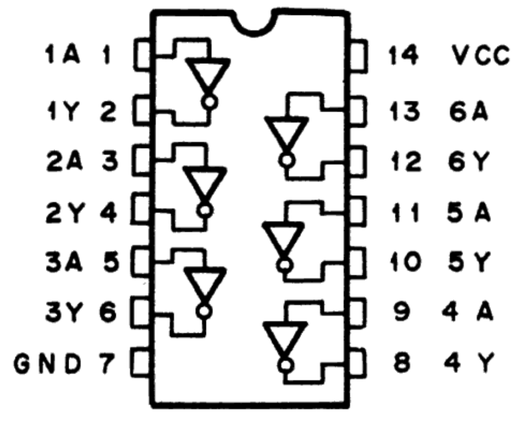

(TOP VIEW)

www.hifiengine.com

ASTI PACIFIC CORPORATION
1318 Nishijima-cho, Hamamatsu, 430 Japan

ASTI NIKKO EUROPA VERTRIEBS GMBH
Haldesdorfer Str. 102·2000 Hamburg 71·West Germany

ASTI NIKKO TECHNOLOGY CORPORATION OF AMERICA
5830 South Triangle Drive Commerce, CA 90040 U.S.A.

MNL012RE Printed in Japan

www.hifiengine.com