Ref.No. : 4539

AV RECEIVER

Service Manual

DTR-30.7

✔ Pre Issue (2015-Jun)
✔ Final Issue (2015-Jun)

CONTENTS

✔ Front Cover (This page)
✔ Note for Parts List
✔ Panel
✔ Reset
✔ Amp Diag Mode after Abnormal Conditions
✔ Model and Destination
✔ Firmware
Adjustment (Unnecessary)
✔ Hookup and Setting
✔ Trouble Shoot
✔ Disassembly
✔ Schematic Diagram
✔ Exploded View
✔ Appendix

SAFETY-RELATED COMPONENT WARNING!! : COMPONENTS IDENTIFIED BY MARK ⚠ ON THE SCHEMATIC DIAGRAM AND IN THE PARTS LIST ARE CRITICAL FOR RISK OF FIRE AND ELECTRIC SHOCK. REPLACE THESE COMPONENTS WITH ONKYO PARTS WHOSE PART NUMBERS APPEAR AS SHOWN IN THIS MANUAL. MAKE LEAKAGE-CURRENT OR RESISTANCE MESUREMENTS TO DETERMINE THAT EXPOSED PARTS ARE ACCEPTABLY INSULATED FROM THE SUPPLY CIRCUIT BEFORE RETURNING THE APPLIANCE TO THE CUSTOMER.

Integra®

Published by Onkyo & Pioneer Corporation Grobal CS Department

File Name of Parts List File (EXCEL File)

Note for Parts List

When parts list is EXCEL file, please refer to the following explanation about file name.

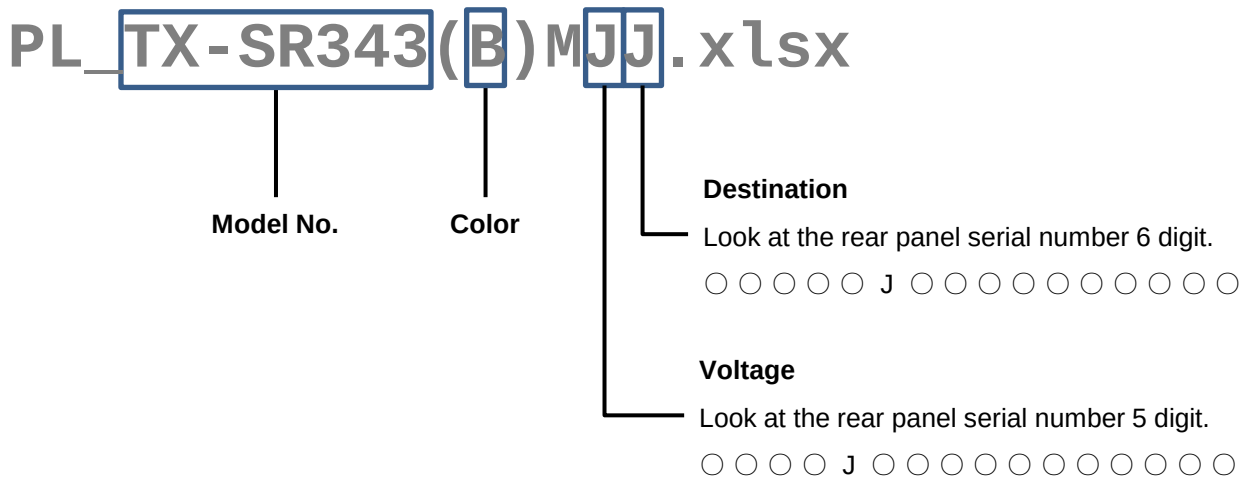

Color

(B)	Black	(LB)	Light Blue
(BR)	Brown	(M)	Wood
(C)	Cherry	(O)	Orange
(G)	Gold	(P)	Pink
(GR)	Green	(R)	Red
(H)	Gray	(S)	Silver
(K)	Black	(V)	Violet
(L)	Blue	(W)	White
		(Y)	Yellow

Voltage

J	100V AC
D	120V AC
M	220-240V AC
P	230V AC
U	100-240V AC

Speaker System (without AMP.) :

0	Passive Subwoofer
F	Front Speaker
C	Center Speaker
R	Rear Speaker
B	Back Speaker

Destination

J	Japan
C	North American
D	USA
F	Taiwan
S	Brazil
Q	Hong Kong
R	China
A	Australia
B	United Kingdom
K	Korea
L	Russia
P	Europe
U	Worldwide

Speaker System (without AMP.) :

L	Left channel
R	Right channel
0	Center channel

COMMON

Front Panel / Rear Panel / Remote Control Unit

Front Panel

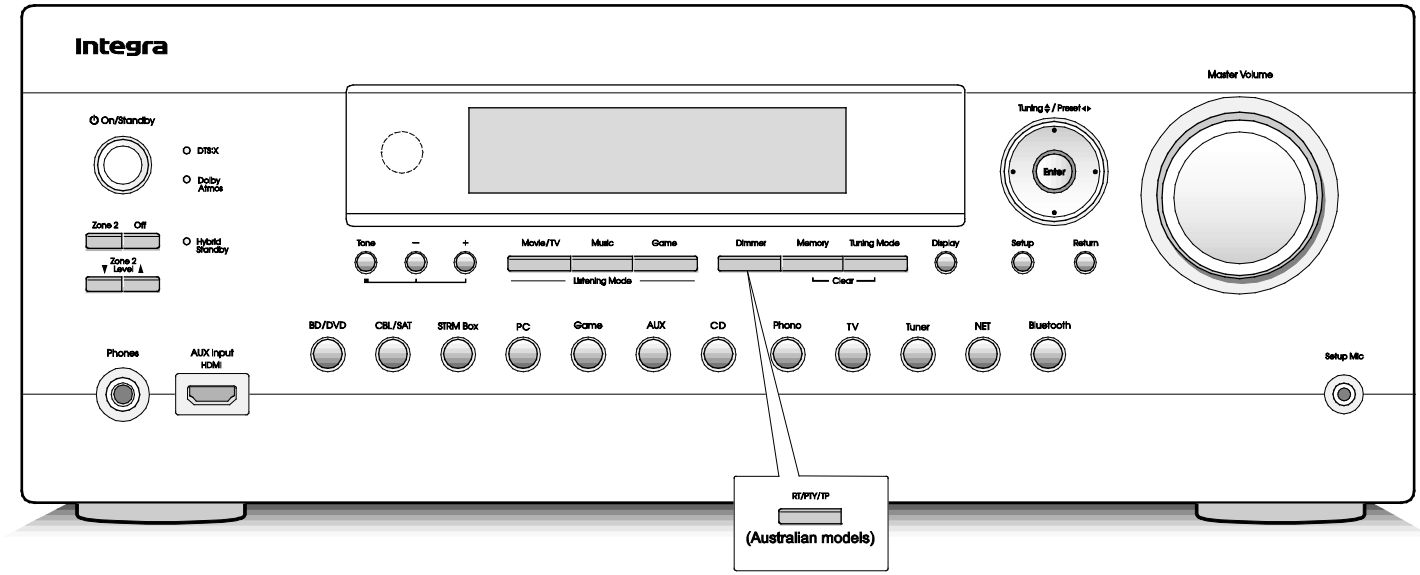

Rear Panel

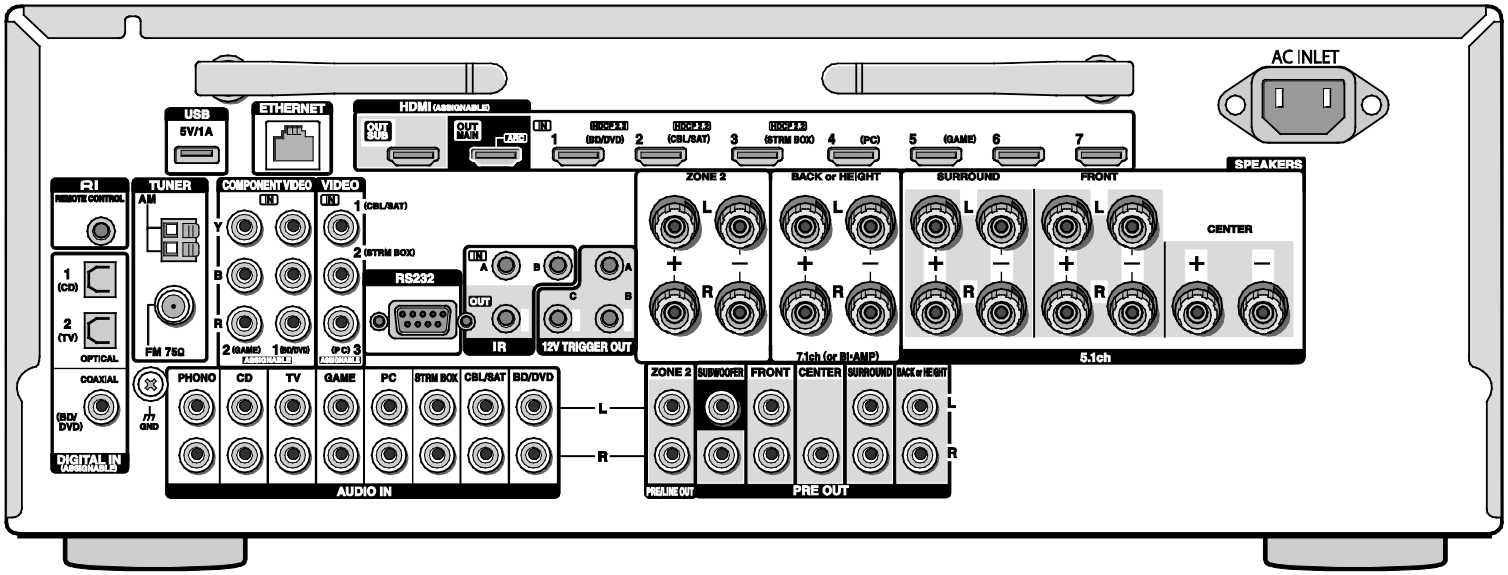

Weight : 10 kg (22 lbs.) (North American), 10.5 kg (23.1 lbs.) (Others)
Dimensions (W × H × D) : 435 mm × 174 mm × 326.5 mm, 17-1/8" × 6-7/8" × 12-7/8"

Remote Control Unit

RC-899M

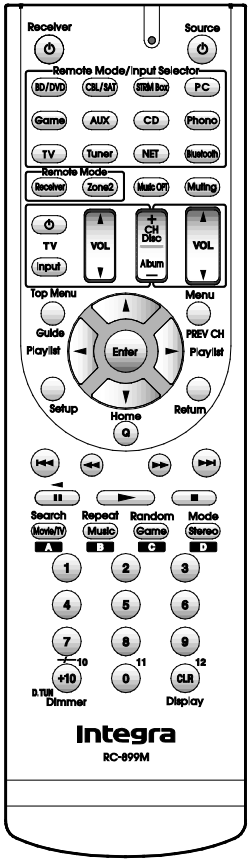

Accessory

Indoor FM antenna --- (1)
AM loop antenna --- (1)
Remote controller (RC-899M) --- (1)
Batteries (AA/R6) --- (2)
Power cord --- (1)
Speaker setup microphone --- (1)

The number in parenthesis indicates the quantity.
On packaging, the letter at the end of the product name indicates the color.

How to Reset the Unit

● How to reset:

Step1

While holding down CBL/SAT on the main unit (note that step 2 must be performed with this button pressed down)

Step2

Press ON/STANDBY on the main unit. ("Clear" appears on the display and the unit returns to standby.)

● Do not unplug the power cord until "Clear" disappears from the display.

● How to reset the remote controller:

Step1

While holding down RECEIVER on the remote controller, press Q until the remote indicator stays lit (about 3 seconds).

Step2

Within 30 seconds, press RECEIVER again.

●リセット方法：

1.

本体のCBL/SATボタンを押しながら（必ず押した状態で2.の操作を行ってください）

2.

本体のON/STANDBYボタンを押す（表示部に「Clear」が表示されてスタンバイ状態に戻ります）

● 表示部から「Clear」が消えるまで、絶対に電源コードを抜かないでください。

●リモコンのリセット方法：

1.

リモコンのRECEIVERボタンを押しながら、リモートインジケーターが点灯するまでQボタンを3秒以上押す

2.

30秒以内にRECEIVERボタンをもう一度押すとリセットされる

Protect Mode

Amp Diag Mode after Abnormal Conditions

The unit goes into standby automatically when detect the abnormal condition of thermal detection, dc voltage detection or current detection. (e.g. TX-SR343 block diagram below)

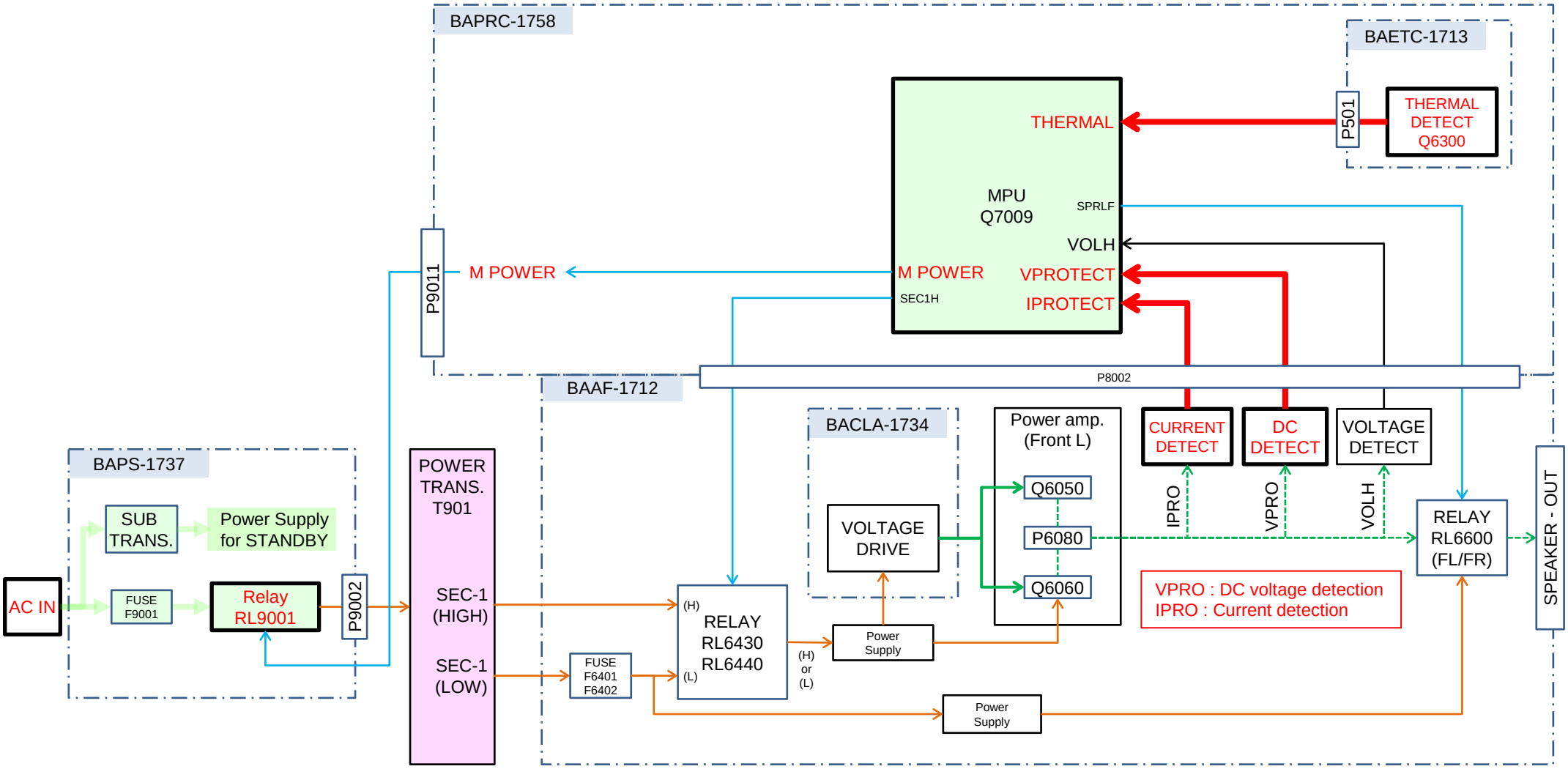

COMMON

Self-diagnostics

Amp Diag Mode after Abnormal Conditions

This function is for avoiding the rupture of electrolytic capacitors with amplifier circuit failure during power-ON.

Operation of Self-diagnostic

Self-diagnostic will start at the timing of next power on, after goes to the protect mode by Current detection or DC voltage detection.

Only On/Standby key could work in this mode. Also remote control does not work. However, the CLEAR operation is enabled.

During Self-diagnostic, the power supply for amplifier circuit become low voltage state(SEC1-LOW), and the speaker relay will be turned off. Then, MPU will check each amplifier circuits Internally by entering the test signal (20 kHz,-20 dBFS sine wave) to each channel from DSP.

MPU will judge the amplifier circuit is good or not from VOLH value.

The normal range of VOLH value is 0.04 V < VOLH < 0.20 V.

If VOLH value is in the out of this range, it will be judged as NG (No good).

No problem found

When protected by current detection, and no problem found, "CHECK SP WIRE“ will be displayed.

In this State, Only the On/Standby key is effective. And if do not anything for 3 minutes, unit goes into standby automatically.

When protected by a DC voltage detection, and no problem found, unit goes into normal operation.

Problem found

When judged as there is a problem on any channel, the information of channel that has a problem will be displayed as in the right figure.

In this State, Only the On/Standby key is effective. Also remote control does not work. If do not anything for 3 minutes, unit goes into standby automatically. This state will keep also after unit turn on/off, or AC unplugged.

the power supply for amplifier circuit become low voltage state(SEC1-LOW), and the speaker relay will be turned off.

Display of during Self-diagnostics

2 Line FL tube type

A	M	P		D	i	a	g		M	o	d	e	

1 Line FL tube type

A	M	P		D	i	a	g		M	o	d	e	

“Mode” This part display the channel which is currently checked. (E.g. "[FL]", etc.)

Display of when problem found

2 Line FL tube type

N	G		C	H	:								
			L	C	R	S	L	S	R	B	L	B	R

1 Line FL tube type

N	G	:	L	C	R	S	L	S	R	B	L	B	R

L	→ Front L channel	S	L	→ Surround L channel
C	→ Center channel	S	R	→ Surround R channel
R	→ Front R channel	B	L	→ Surround back L channel
		B	R	→ Surround back R channel

COMMON

Amp Diag Mode after Abnormal Conditions

Confirmation of the protect cause

While NG channel is displayed, You can confirm the protect cause by following the step below.

1. Press the Enter button
2. The protect cause are displayed for 5 seconds.

Please check the around of those amplifier circuit and repair it.

Protected by current detection

D	E	T	.	P	R	O	T	E	C	T		:	I

Protected by DC Voltage detection

D	E	T	.	P	R	O	T	E	C	T		:	V

Clear of NG CH information

After repair, you can clear NG CH information by following the steps below.

1. Press the On/Standby key while pressing the Enter key.
2. Display as in the right figure appears.
3. Unit goes into Standby automatically after 5 seconds.

Self-diagnostic will start again at the timing of next power on.

By this, You can verify whether repair was properly or not.

If problem found after repair, please re-check the around of its circuit.

Clear of NG CH information

N	G		C	H		C	L	E	A	R			

Cancel of Self-diagnostic

You can cancel this mode by clear operation (press Standby key while pressing CBL/SAT key).

After cancel this mode, receiver will be started as normal operation.

How to check model and destination

[TV] + [ON/STANDBY] → [DIMMER] or [RT/PTY/TP] → [TONE +] x 4

Model Name	Distination	FL Display													
TX-NR545	DC	N	R	5	4	5			D	C		2	0	0	0
TX-NR545	DF	N	R	5	4	5			D	F		0	0	0	0
TX-NR545	xx	N	R	5	4	5			x	x		8	0	0	0
DTR-20.7	DD	D	T	R	2	0	7		D	D		2	0	4	0
DTR-20.7	xx	D	T	R	2	0	7		x	x		8	0	4	0
TX-NR646	DC	N	R	6	4	6			D	C		2	2	0	0
TX-NR646	DF	N	R	6	4	6			D	F		0	2	0	0
TX-NR646	JJ	N	R	6	4	6			J	J		4	2	0	0
TX-NR646	xx	N	R	6	4	6			x	x		8	2	0	0
DTR-30.7	DD	D	T	R	3	0	7		D	D		2	2	4	0
DTR-30.7	JJ	D	T	R	3	0	7		J	J		4	2	4	0
DTR-30.7	xx	D	T	R	3	0	7		x	x		8	2	4	0
TX-NR747	DC	N	R	7	4	7			D	C		2	4	0	0
TX-NR747	DF	N	R	7	4	7			D	F		0	4	0	0
TX-NR747	xx	N	R	7	4	7			x	x		8	4	0	0
DTR-40.7	DD	D	T	R	4	0	7		D	D		2	4	4	0
DTR-40.7	xx	D	T	R	4	0	7		x	x		8	4	4	0

How to check Firmware Version & Preparation of Update

Step1 : [DISPLAY] + [ON/STANDBY] x 2

Main Firmware Version will appear on the main unit's display.

Step2 : [TONE +]

NET Firmware Version will appear on the main unit's display.

Step3 : [TONE +]

DSP Firmware Version will appear on the main unit's display.

Step4 : [TONE +]

VIDEO Firmware Version will appear on the main unit's display.

Step5 : [TONE +]

OSD Firmware Version will appear on the main unit's display.

Step6 : [TONE +]

VS100 Firmware Version will appear on the main unit's display.

(DTR-40.7 only)

[Preparation of Update]

1. Connect the USB storage device to your PC. If there is any data in the USB storage device, remove it.

2. Download the firmware file (package file) from the Onkyo FTP-server.
   However European service partners should download the firmware file (package file) from the ExtraNet.

   Onkyo FTP-server: ftp://manex.onkyo.co.jp/_servicefwa/TX-NR545
   ID and Password are those we informed when changed.
   Filename is as follows: ONKAVR001D_**********.zip

   Unzip the downloaded file. A following file is created.
   ONKAVR001D_**********.of1
   ONKAVR001D_**********.of2
   ONKAVR001D_**********.of3
   ONKAVR001D_**********.of4
   ONKAVR001D_**********.of5

3. Copy it to the USB storage device. Be careful not to copy the zip file.

4. Remove the USB storage device from your PC.

How to Update (service mode)

Overwriting is also possible.

1. Turn on the unit. It takes some time to start after you switch on the unit.

2. Select the USB input source.

3. Connect the USB storage device to USB port on the unit. Wait until Initializing of USB/NET finishes.

4. Hold down [DISPLAY] button and then press [ON/STANDBY] button twice.
Main version will be displayed, and HYBRID STANDBY indicator will start to flash.

5. Press [RETURN] button. “NET -> ALL_D” will be displayed.

6. Select “USB -> ALL_D” by [PRESET(left/right)] cursors and [TUNING(up/down)] cursors, then press [ENTER] button, updating will begin.

7. Wait until update is completed. When the update ends, “Completed!” is displayed.
(If you leave it, it automatically turns standby mode.)

8. Press [ON/STANDBY] button, and the unit turns on.

9. Check the new FW version number.

<Note>

If the procedure might not be successful, please select “USB -> ALL_M”.

No Sound

■ No sound from connected player

☐ Chose input selector which is assigned to connected input terminal ?

☐ Isn't muting on ?

■ No sound from connected TV

☐ Chose wrong input selector ?

☐ Connect to this model's HDMI OUT terminal from TV by HDMI cable ?

☐ When TV supports ARC function, connect to his model's HDMI OUT terminal from TV's HDMI input terminal for ARC function ?

☐ When TV doesn't support ARC function, connect TV to this model with optical cable etc. ?

☐ Isn't muting on ?

■ No sound from some connected loudspeaker(s)

☐ No sound loudspeaker(s) config is enabled ?

■ No sound from all connected TV or Blu-ray player etc.

☐ After chose loudspeaker volume level setting, test tone is OK ?

■ No problem about above items

☐ Unplug power cord
After 10 seconds, connect power cord again

☐ Reset this model

No Picture

■ In general

☐ Connection cable is bent , twisted or damaged ?

☐ Input is switched on TV ?

■ No picture from connected player by HDMI input terminal

☐ Chose input selector which is connected to player ?

☐ Listening mode is not Pure Audio ?

☐ Don’t use HDMI-DVI adaptor. From personal computer ?

■ No picture from connected player by component video terminal

☐ Output to TV connected to component video out terminal from player's picture connected to the composite video input terminals ?

■ No problem about above items

☐ Unplug power cord

After 10 seconds, connect power cord again

☐ Reset this model

No Power

■ In general

☐ Doesn't be connection cable bent, be it twisted and be it damaged?

■ There is time when indication on the front panel doesn't just light up.

☐ Please check the connecting cord of a DISPLAY PCB.

■ No problem about above items

☐ Unplug power cord

After 10 seconds, connect power cord again

☐ Reset this model

No Sound (HDMI in)

Trouble Shoot

Here the trouble shoot which focuses on the hardware troubles regarding PCB assembly is explained.
Of course, with actual repair there are also troubles due to damaged Power Transformer, Wiring, soldering etc. in addition to PCB assembly.

このトラブルシュートは故障している基板を特定するためのものです。
ここで見つかった故障基板だけが原因ではなく、電源トランス・接続線の結線・はんだ付けなどの不具合も考えられます

Process	Check Point		Damaged PCB
1	J6718 (BAAF-1720) ● : +23V	No Good → / OK ↓	BAAF-1720
2	P7003B (BADG-1742 / 1749) ● No.1 pin : +15V ● No.3 pin : -15V	No Good → / OK ↓	BAAF-1720
3	P801B (BAPRC-1760) ● No.5 pin : +15V	No Good → / OK ↓	BATRM-1754
4	P8003A (BADG-1742 / 1749) ● No.20 pin : +3.3V	No Good → / OK ↓	BAPRC-1760
5	P8003A (BADG-1742 / 1749) ● No.5 pin : Check signal ● No.7 pin : Check signal	No Good → / OK ↓	BAPRC-1760
6	Q1501 (BADG-1742 / 1749) ● No.7 pin : Check signal	No Good → / OK ↓	BADG-1742(TX-) BADG-1749(DTR-)
7	J6615 (BAAF-1720) ● : Check signal	No Good → / OK ↓	BAAF-1720
8	Q6050,Q6060 (BAAF-1720) ● Base : Check signal ● Base : Check signal	No Good → / OK ↓	BACLA-1746(TX-) BACLA-1753(DTR-)
9	P801B (BAPRC-1760) ● No.3 pin : +3V	No Good → / OK ↓	BAAF-1720
10	P6080 (BAAF-1720) ● : Check signal	No Good → / OK ↓	BAAF-1720
11		→	BATRM-1754

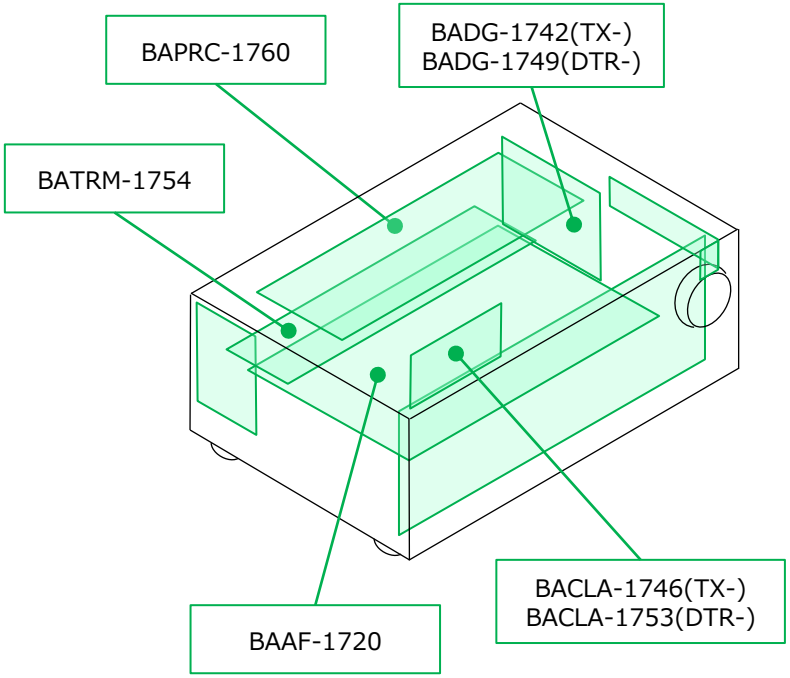

● Each voltage is shown as the reference value.
● 各電圧は実測した標準値です

TX-NR545/646/747
DTR-20.7/30.7/40.7

No Sound (Opt in)

Here the trouble shoot which focuses on the hardware troubles regarding PCB assembly is explained.
Of course, with actual repair there are also troubles due to damaged Power Transformer, Wiring, soldering etc. in addition to PCB assembly.

このトラブルシュートは故障している基板を特定するためのものです。
ここで見つかった故障基板だけが原因ではなく、電源トランス・接続線の結線・はんだ付けなどの不具合も考えられます

Process	Check Point	Damaged PCB
1	J6718 (BAAF-1720) ● : +23V	BAAF-1720
2	P7003B (BADG-1742 / 1749) ● No.1 pin : +15V ● No.3 pin : -15V	BAAF-1720
3	P801B (BAPRC-1760) ● No.5 pin : +15V	BATRM-1754
4	P8003A (BADG-1742 / 1749) ● No.20 pin : +3.3V	BAPRC-1760
5	P8003A (BADG-1742 / 1749) ● No.15 pin : Check signal	BADG-1742(TX-) BADG-1749(DTR-)
6	P8003A (BADG-1742 / 1749) ● No.5 pin : Check signal ● No.7 pin : Check signal	BAPRC-1760
7	Q1501 (BADG-1742 / 1749) ● No.7 pin : Check signal	BADG-1742(TX-) BADG-1749(DTR-)
8	J6615 (BAAF-1720) ● : Check signal	BAAF-1720
9	Q6050,Q6060 (BAAF-1720) ● Base : Check signal ● Base : Check signal	BACLA-1746(TX-) BACLA-1753(DTR-)
10	P801B (BAPRC-1760) ● No.3 pin : +3V	BAAF-1720
11	P6080 (BAAF-1720) ● : Check signal	BAAF-1720
12		BATRM-1754

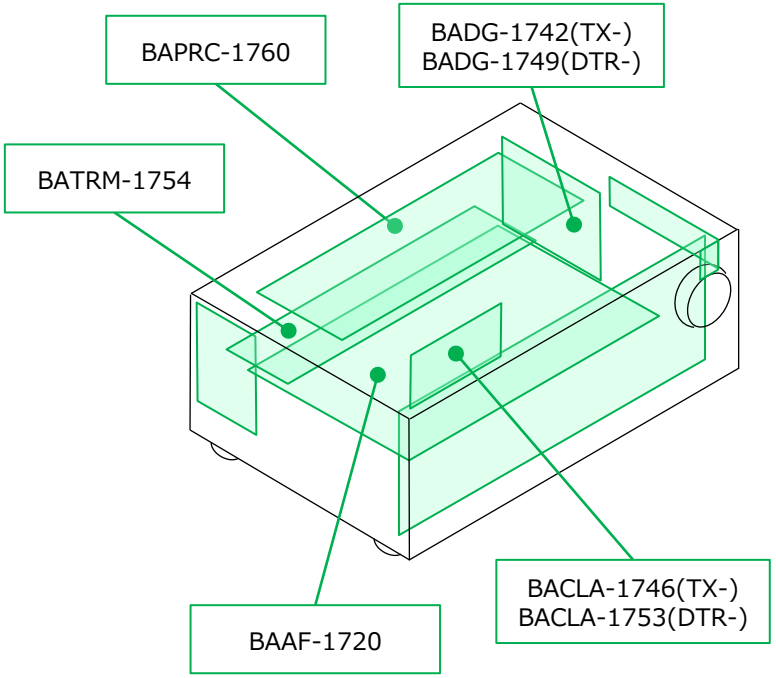

● Each voltage is shown as the reference value.
● 各電圧は実測した標準値です

No Sound (Analog in)

Here the trouble shoot which focuses on the hardware troubles regarding PCB assembly is explained.
Of course, with actual repair there are also troubles due to damaged Power Transformer, Wiring, soldering etc. in addition to PCB assembly.

このトラブルシュートは故障している基板を特定するためのものです。
ここで見つかった故障基板だけが原因ではなく、電源トランス・接続線の結線・はんだ付けなどの不具合も考えられます

Process	Check Point		Damaged PCB
1	J6718 (BAAF-1720) ● : +23V	No Good → / OK ↓	BAAF-1720
2	P7003B (BADG-1742 / 1749) ● No.1 pin : +15V ● No.3 pin : -15V	No Good → / OK ↓	BAAF-1720
3	J6615 (BAAF-1720) ● : Check signal	No Good → / OK ↓	BAAF-1720
4	Q6050,Q6060 (BAAF-1720) ● Base : Check signal ● Base : Check signal	No Good → / OK ↓	BACLA-1746(TX-) BACLA-1753(DTR-)
5	P801B (BAPRC-1760) ● No.3 pin : +3V	No Good → / OK ↓	BAAF-1720
6	P6080 (BAAF-1720) ● : Check signal	No Good → / OK ↓	BAAF-1720
7		→	BATRM-1754

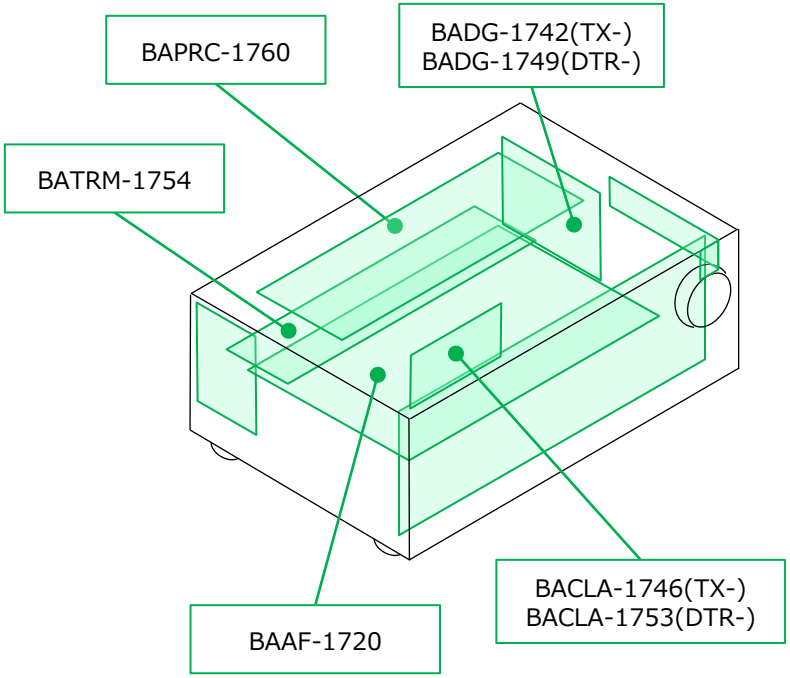

● Each voltage is shown as the reference value.
● 各電圧は実測した標準値です

No Picture (HDMI in/ out)

Here the trouble shoot which focuses on the hardware troubles regarding PCB assembly is explained.
Of course, with actual repair there are also troubles due to damaged Power Transformer, Wiring, soldering etc. in addition to PCB assembly.

このトラブルシュートは故障している基板を特定するためのものです。
ここで見つかった故障基板だけが原因ではなく、電源トランス・接続線の結線・はんだ付けなどの不具合も考えられます

Process	Check Point		Damaged PCB
1	P801B (BAPRC-1760) ● No.5 pin : +15V	No Good →	BATRM-1754
2		OK →	BAPRC-1760

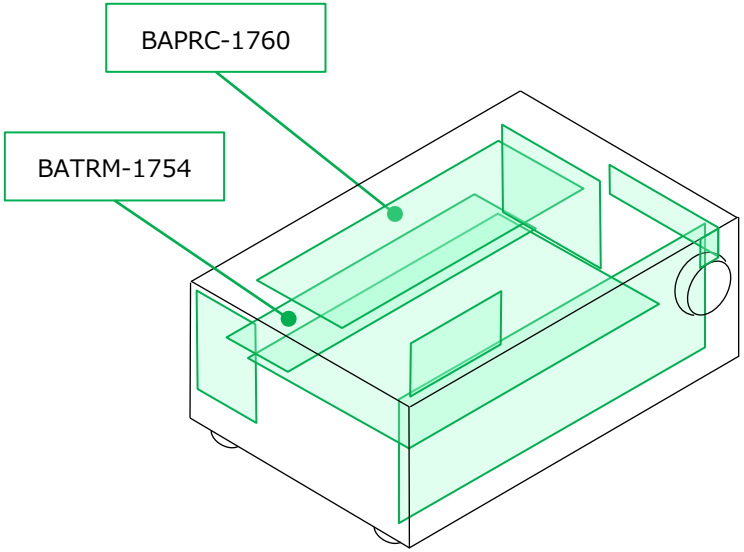

●Each voltage is shown as the reference value.
●各電圧は実測した標準値です

No Picture (Component in/ HDMI out)

Trouble Shoot

Here the trouble shoot which focuses on the hardware troubles regarding PCB assembly is explained.
Of course, with actual repair there are also troubles due to damaged Power Transformer, Wiring, soldering etc. in addition to PCB assembly.

このトラブルシュートは故障している基板を特定するためのものです。
ここで見つかった故障基板だけが原因ではなく、電源トランス・接続線の結線・はんだ付けなどの不具合も考えられます

Process	Check Point		Damaged PCB
1	**P801B** (BAPRC-1760) ● No.5 pin : +15V	No Good → / OK ↓	BATRM-1754
2	**P2800B** (BAPRC-1760) ● No.9 pin : +5V	No Good → / OK ↓	BAPRC-1760
3	**P2800B** (BAPRC-1760) ● No.3 pin : Check signal ● No.5 pin : Check signal ● No.7 pin : Check signal	No Good → / OK ↓	BATRM-1754
4		→	BAPRC-1760

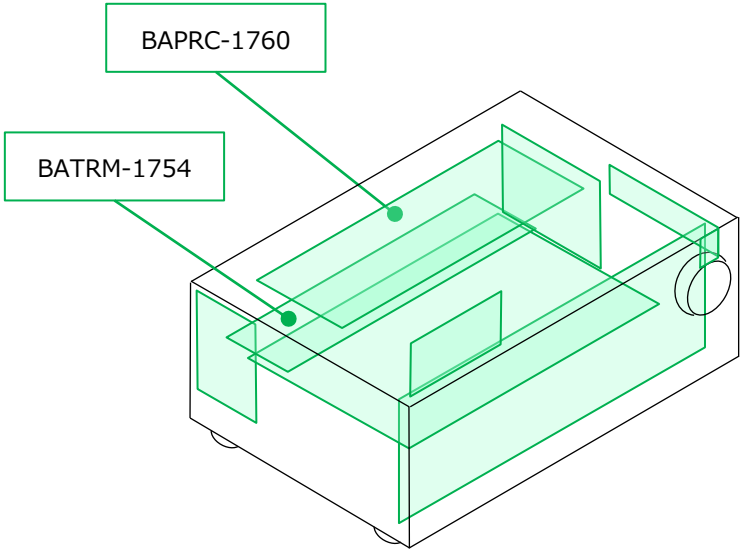

●Each voltage is shown as the reference value.
●各電圧は実測した標準値です

TX-NR545/646/747
DTR-20.7/30.7/40.7

No Picture (Composite in/ HDMI out)

Here the trouble shoot which focuses on the hardware troubles regarding PCB assembly is explained.
Of course, with actual repair there are also troubles due to damaged Power Transformer, Wiring, soldering etc. in addition to PCB assembly.

このトラブルシュートは故障している基板を特定するためのものです。
ここで見つかった故障基板だけが原因ではなく、電源トランス・接続線の結線・はんだ付けなどの不具合も考えられます

Process	Check Point		Damaged PCB
1	**P801B** (BAPRC-1760) ● No.5 pin : +15V	No Good → / OK ↓	BATRM-1754
2	**P2800B** (BAPRC-1760) ● No.9 pin : +5V	No Good → / OK ↓	BAPRC-1760
3	**P2800B** (BAPRC-1760) ● No.7 pin : Check signal	No Good → / OK ↓	BATRM-1754
4		→	BAPRC-1760

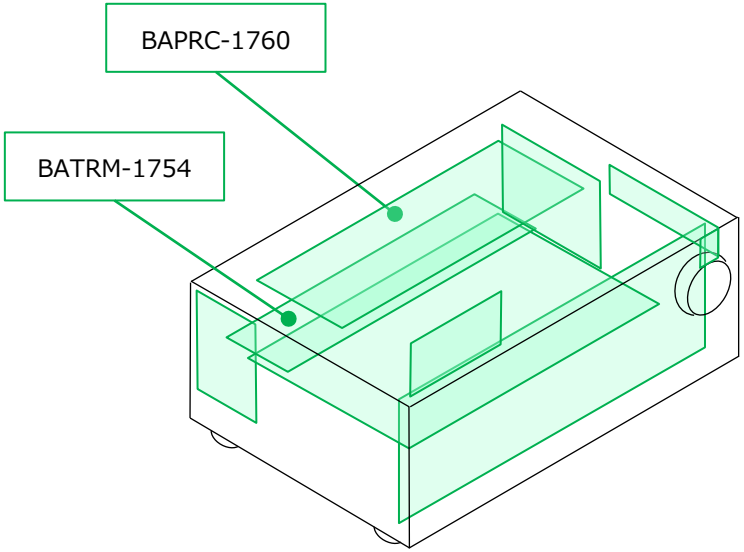

●Each voltage is shown as the reference value.
●各電圧は実測した標準値です

No Power

Trouble Shoot

Here the trouble shoot which focuses on the hardware troubles regarding PCB assembly is explained.
Of course, with actual repair there are also troubles due to damaged Power Transformer, Wiring, soldering etc. in addition to PCB assembly.

このトラブルシュートは故障している基板を特定するためのものです。
ここで見つかった故障基板だけが原因ではなく、電源トランス・接続線の結線・はんだ付けなどの不具合も考えられます

Process	Check Point		Damaged PCB
1	C9001 (BAPS-1743 / 1750) ● : AC100～240V	No Good / OK	BAPS-1743(TX-) BAPS-1750(DTR-)
2	F9002 (BAPS-1743 / 1750)	No Good / OK	BAAF-1720 BACLA-1746(TX-) BACLA-1753(DTR-)
3	F6401, F6402 (BAAF-1720)	No Good / OK	BAAF-1720 and BACLA-1746
4	ANY PARTS (BAAF-1720)	No Good / OK	BAAF-1720 BACLA-1746(TX-) BACLA-1753(DTR-)
5	P7001(FFC) (BAPRC-1760)	No Good / OK	P7001(FFC)
6	P9011B (BAPRC-1760) ● No.4 pin : +12V (StandBy) +15V (PowerOn)	No Good / OK	BAPS-1743(TX-) BAPS-1750(DTR-)
7	P9011B (BAPRC-1760) ● No.1 pin : +3V	No Good / OK	BAPRC-1760
8	P701A (BAPRC-1760) ● No.1 pin : +5V	No Good / OK	BAPRC-1760
9	RL9001 (BAPS-1743 / 1750)	No Good / OK	BAPS-1743(TX-) BAPS-1750(DTR-)
10	P9002 (BAPS-1743 / 1750) ● : AC100～240V	No Good / OK	BATRM-1754
11	P7001(FFC) (BADIS-1740 / 1747)	No Good / OK	P7001(FFC)
12			BADIS-1740(TX-) BADIS-1747(DTR-)

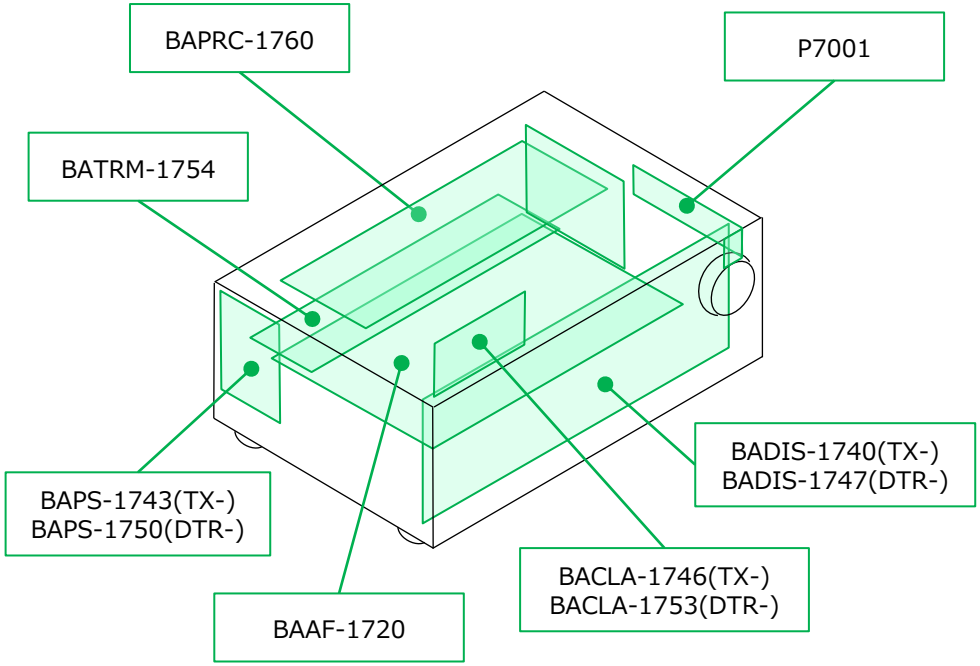

ANY PARTS on BAAF-1720 / BACLA-1746

Check damage parts

Normal(OK) or Damage (No good)

Check the damage in the red framework part as shown with visual inspection.

e.g. Broken, Burnout, Discoloration, etc.

1. When being not turned on with remote control unit only, BADIS-1740(TX-)/ BADIS-1747(DTR-) is abnormal.
2. When being not turned on with button on the main unit only, BADIS-1740(TX-)/ BADIS-1747(DTR-) is abnormal.

● Each voltage is shown as the reference value.
● 各電圧は実測した標準値です

TX-NR545/646/747
DTR-20.7/30.7/40.7

Check Point (BAAF-1720)

J6615, Q6050, Q6060, P6080

Input terminal : HDMI IN or OPT IN or ANALOG IN
Input signal(HDMI/OPT IN) : Test disc 1kHz 0dB
Audio format : LPCM, Dolby Digital(Otherwise, CD)
Input signal(ANALOG IN) : 1kHz 2Vrms
Master volume : 46

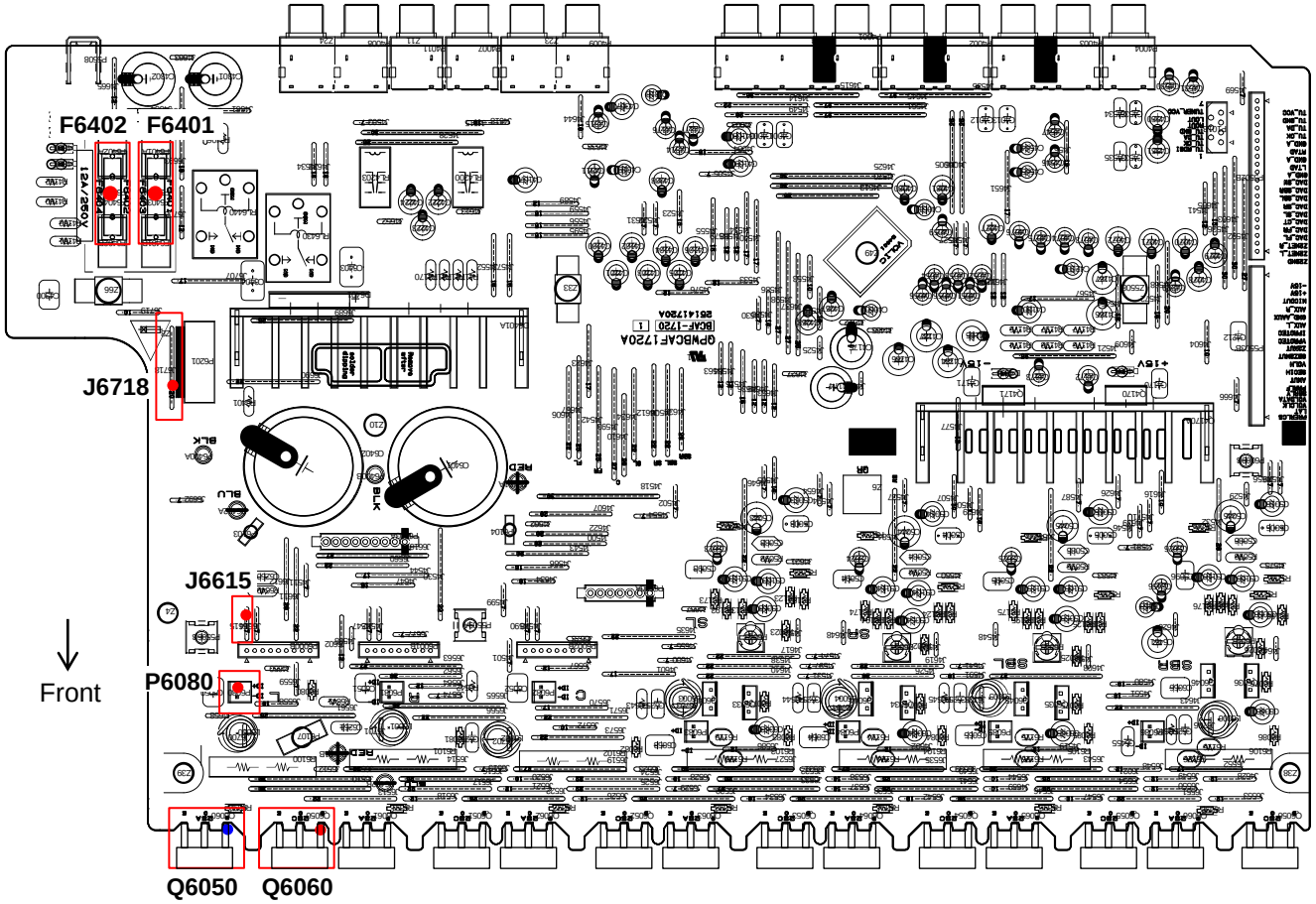

J6718
Check voltage
● : ca. +23V

J6615
Check signal

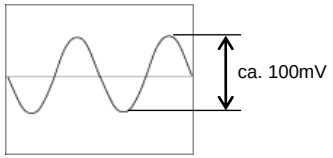

Q6050, Q6060
Check signal
● Q6050(base) :
● Q6060(base) :

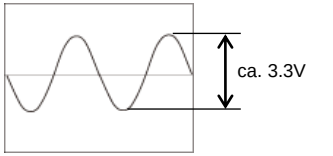

P6080
Check signal

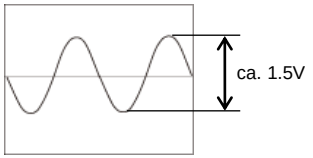

F6401
Check damage
● Normal (OK) or blown (No good)

F6402
Check damage
● Normal (OK) or blown (No good)

Back

●Each voltage is shown as the reference value.
●各電圧は実測した標準値です

Check Point (BADG-1742(TX-) / BADG-1749(DTR-))

Trouble Shoot

Front ←

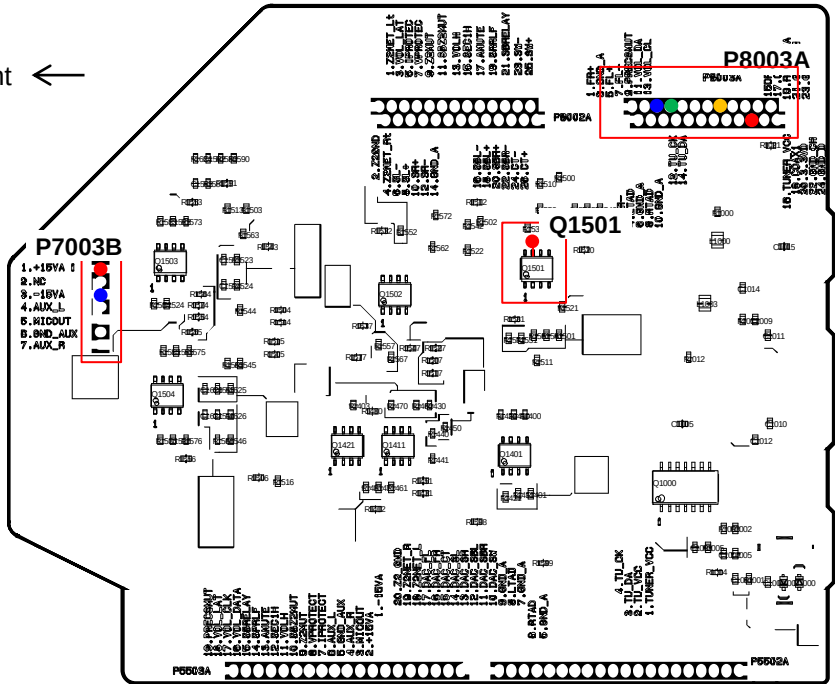

BADG-1742 (TX-NR545/646/747)

Front ←

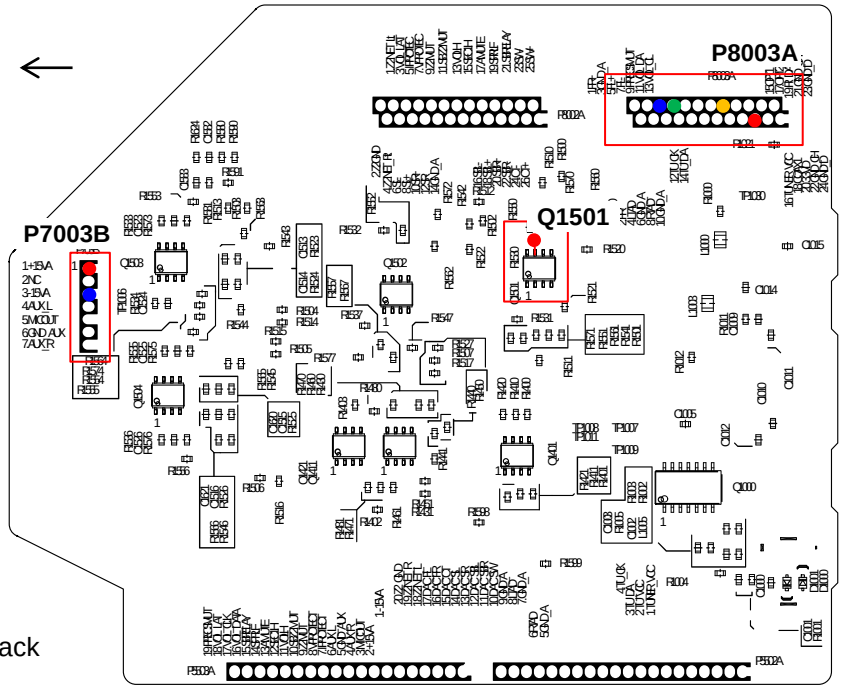

Back

BADG-1749 (DTR-20.7/30.7/40.7)

P7003B

Check voltage

- No.1 pin : +15V
- No.3 pin : -15V

P8003A

Check voltage

- No.20 pin : +3.3V

P8003A

Check voltage

- No.5 pin : Check signal
- No.7 pin : Check signal

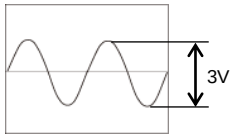

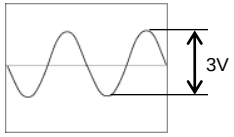

Input terminal : HDMI IN or OPT IN
Input signal(HDMI/ OPT IN) : Test disc 1kHz 0dB
Audio format : LPCM, Dolby Digital(Otherwise, CD)

P8003A

Check voltage

- No.15 pin : Check signal

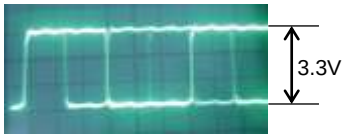

Input terminal : HDMI IN or OPT IN
Input signal(HDMI/ OPT IN) : Test disc 1kHz 0dB
Audio format : LPCM, Dolby Digital(Otherwise, CD)

Q1501

Check voltage

- No.7 pin : Check signal

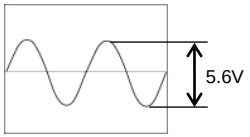

Input terminal : HDMI IN or OPT IN
Input signal(HDMI/ OPT IN) : Test disc 1kHz 0dB
Audio format : LPCM, Dolby Digital(Otherwise, CD)

- Each voltage is shown as the reference value.
- 各電圧は実測した標準値です

TX-NR545/646/747
DTR-20.7/30.7/40.7

Check Point (BAPRC-1760)

Trouble Shoot

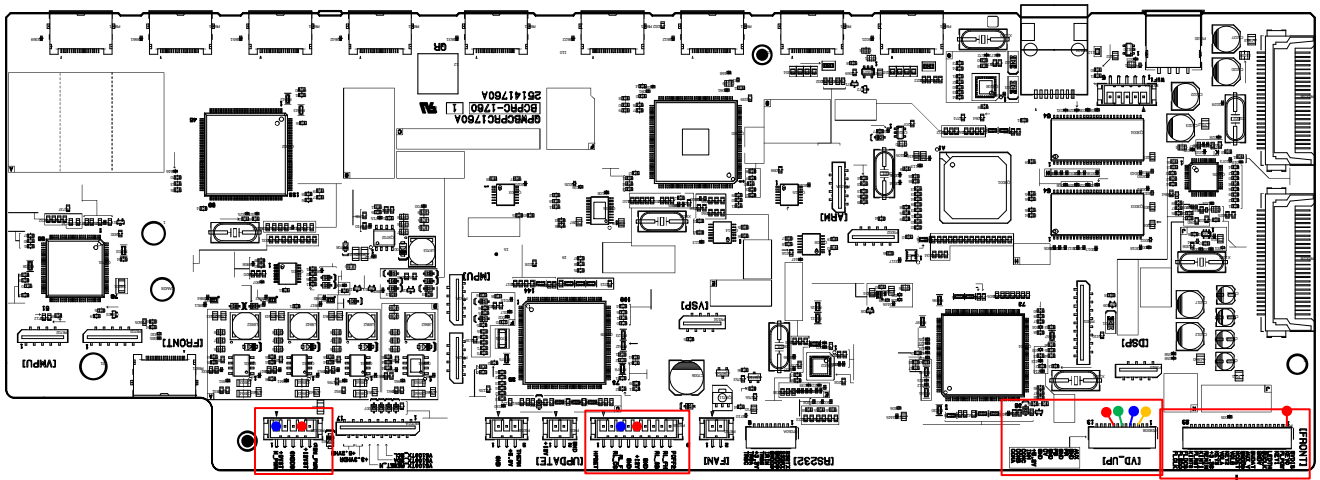

Front

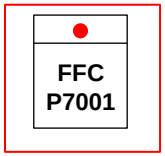

P801B
Check voltage
● No.5 pin : ca. +12V (Stand By), ca. +15V (Power On)

P801B
Check voltage
● No.3 pin : ca. +3V

P2800B
Check voltage
● No.9 pin : ca. +5V

P2800B
Check signal
● No.3 pin : signal

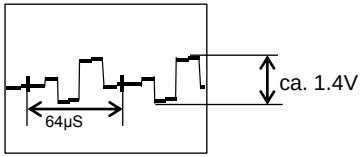

● No.5 pin : signal

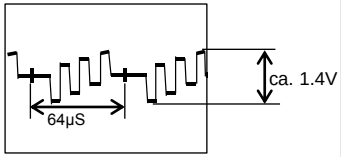

Input signal : Color bar(NTSC)

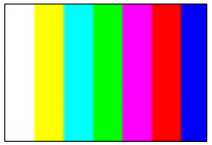

● No.7 pin : signal

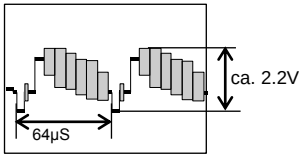

P7001(FFC)
● Check damage and connection
How to check
1.Disconnect the FFC from the socket.
2.Check the contacts of the FFC.

P9011B
Check voltage
● No.4 pin : ca. +12V (Stand By), ca. +15V (Power On)

P9011B
Check voltage
● No.1 pin : ca. +3V

P701A
Check voltage
● No.1 pin : ca. +5.2V

Back

●Each voltage is shown as the reference value.
●各電圧は実測した標準値です

TX-NR545/646/747
DTR-20.7/30.7/40.7

Check Point (BAPS-1743(TX-) / BAPS-1750(DTR-))

Trouble Shoot

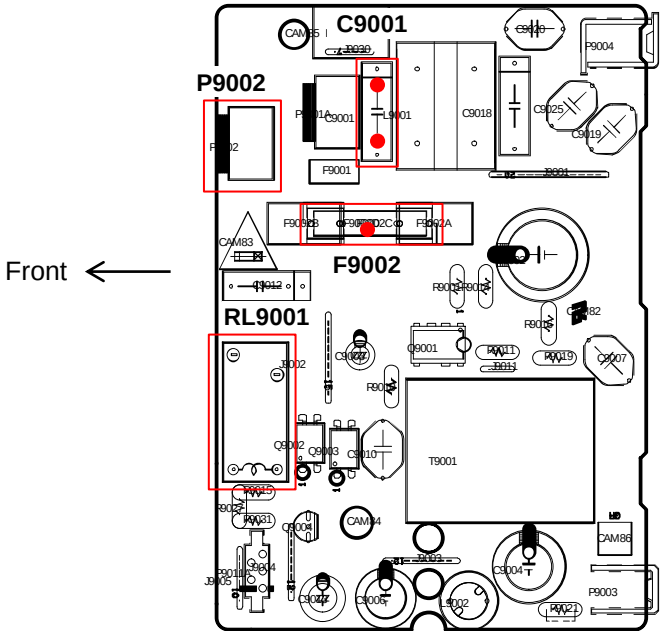

BAPS-1743 (TX-NR545/646/747)

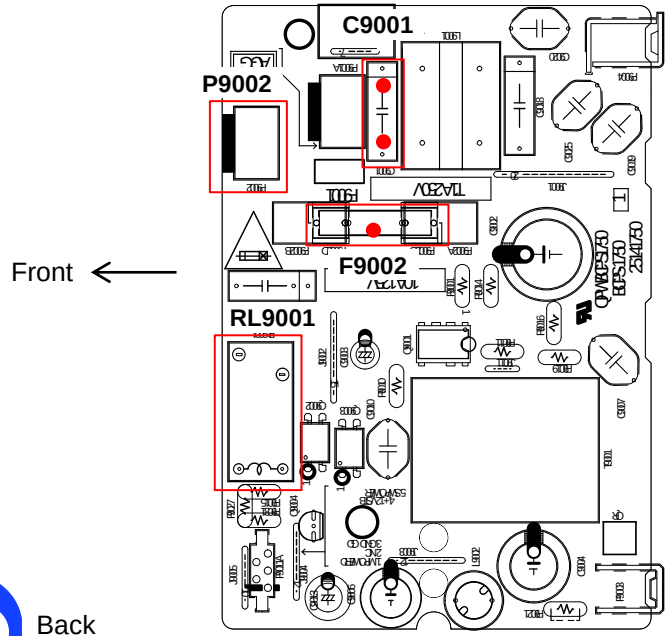

BAPS-1750 (DTR-20.7/30.7/40.7)

C9001
Check voltage
● : AC100 ～ 240V (Power supply voltage)

F9002
Check damage
● Normal (OK) or blown (No good)

RL9001
Check operation of a relay by sound.
No sound at all ---> No good

P9002
Check voltage
● : AC100 ～ 240V (Power supply voltage)

Back

●Each voltage is shown as the reference value.
●各電圧は実測した標準値です

TX-NR545/646/747
DTR-20.7/30.7/40.7

Check Point (BADIS-1740)

P7001

● Check damage and connection

How to check

1.Disconnect the FFC from the socket.

2.Check the contacts of the FFC.

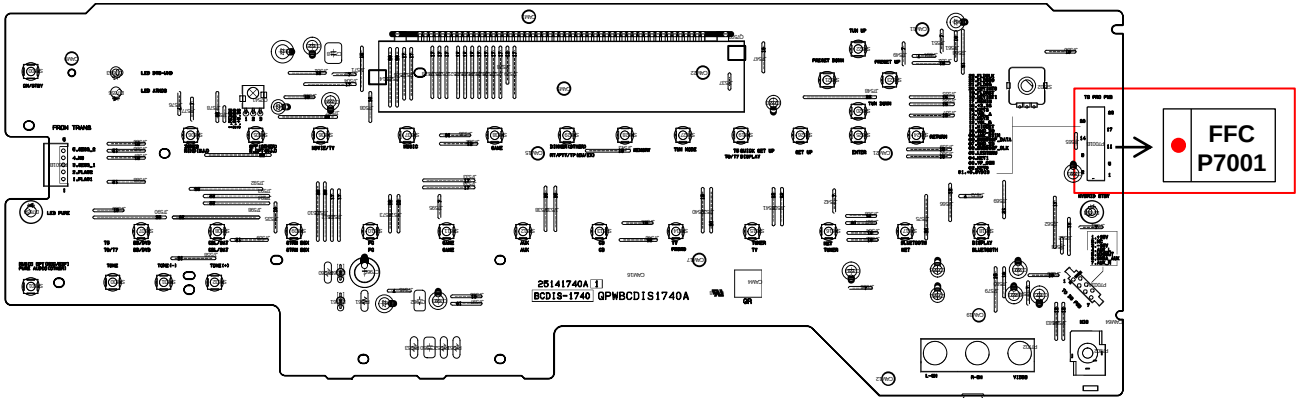

BAPS-1743 (TX-NR545/646/747)

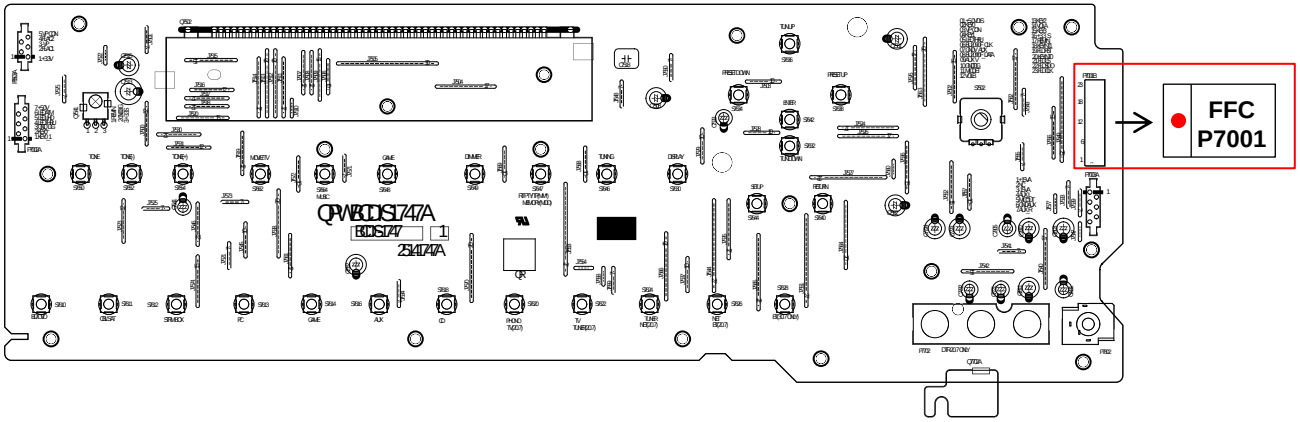

BAPS-1750 (DTR-20.7/30.7/40.7)

Back

●Each voltage is shown as the reference value.

●各電圧は実測した標準値です

Overview

This model can be disassembled in the order shown below.

TOP COVER

FRONT PANEL
Refer to 「Front Panel Section」

PCB BADIS-1747
- BAETC-1745 (DTR-20.7)
- BAETC-1752 (DTR-30.7/40.7)
- BAHDM-1763

FAN & HD-BaseT & WiFi
Refer to 「FAN & HD-BaseT & WiFi Section」

PCB BAHDM-1762
- BARF-1567 (DTR-20.7 only)
- BARF-1771 (DTR-30.7 only)

FAN (Except DTR-20.7)

PowerSupply
Refer to 「PowerSupply Section」

PCB BAPS-1750

PROCESSOR
Refer to 「Processor Section」

PCB BAPRC-1760

Video/SpeakerTerminal & TUNER & Digital PCB
Refer to 「Video/SpeakerTerminal & Tuner & Digital Section」

PCB BATRM-1754
- BARF-1730
- BADG-1749

AMPLIFIER PCB
Refer to 「Amplifier Section 」

PCB BAAF-1720
- BACLA-1753

TR. Q6050~6056 / Q6060~Q6066

Front Panel Section

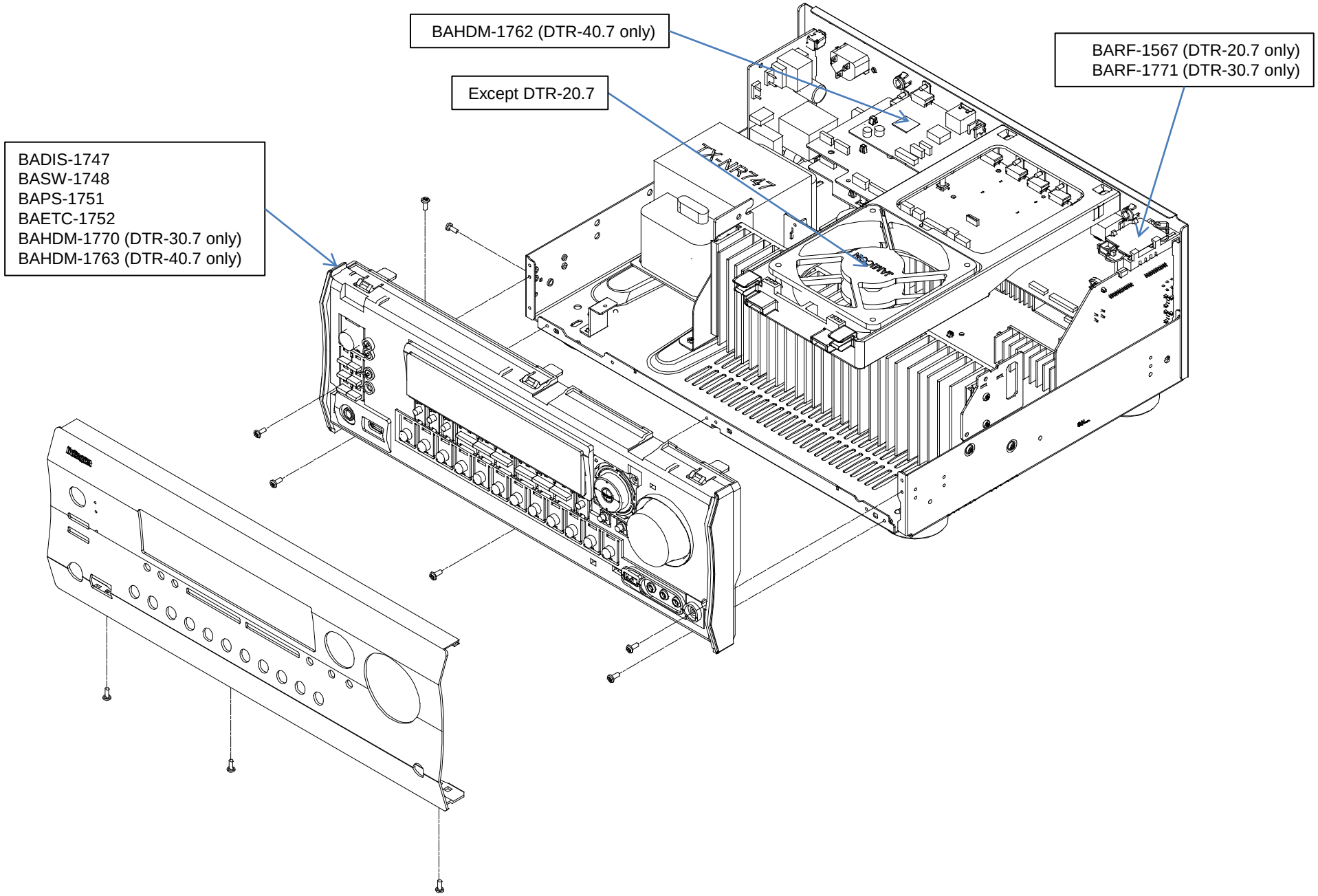

Power Supply Section

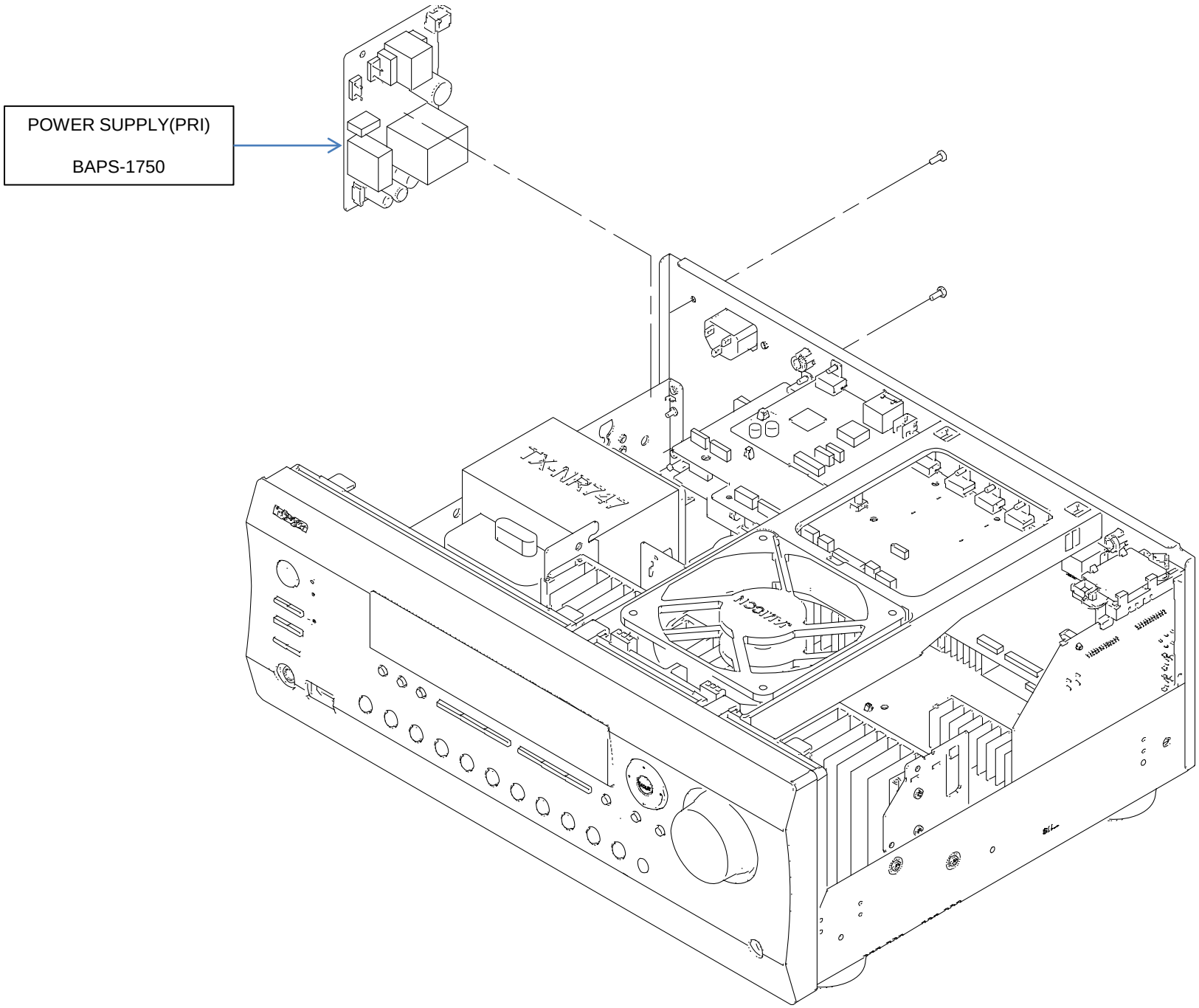

Power Supply & FAN & HD-BaseT & WiFi Section

Disassembly

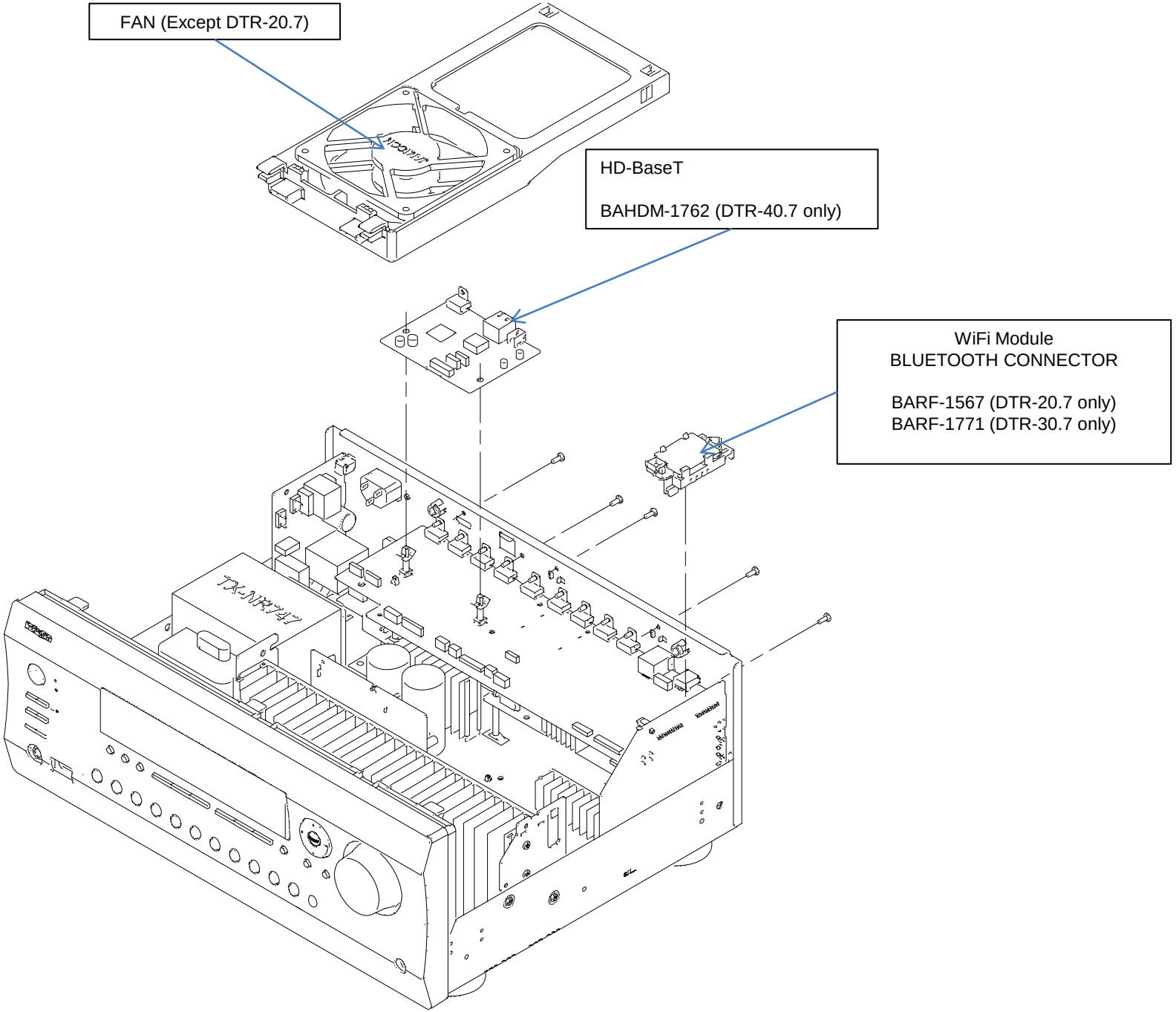

Processor Section

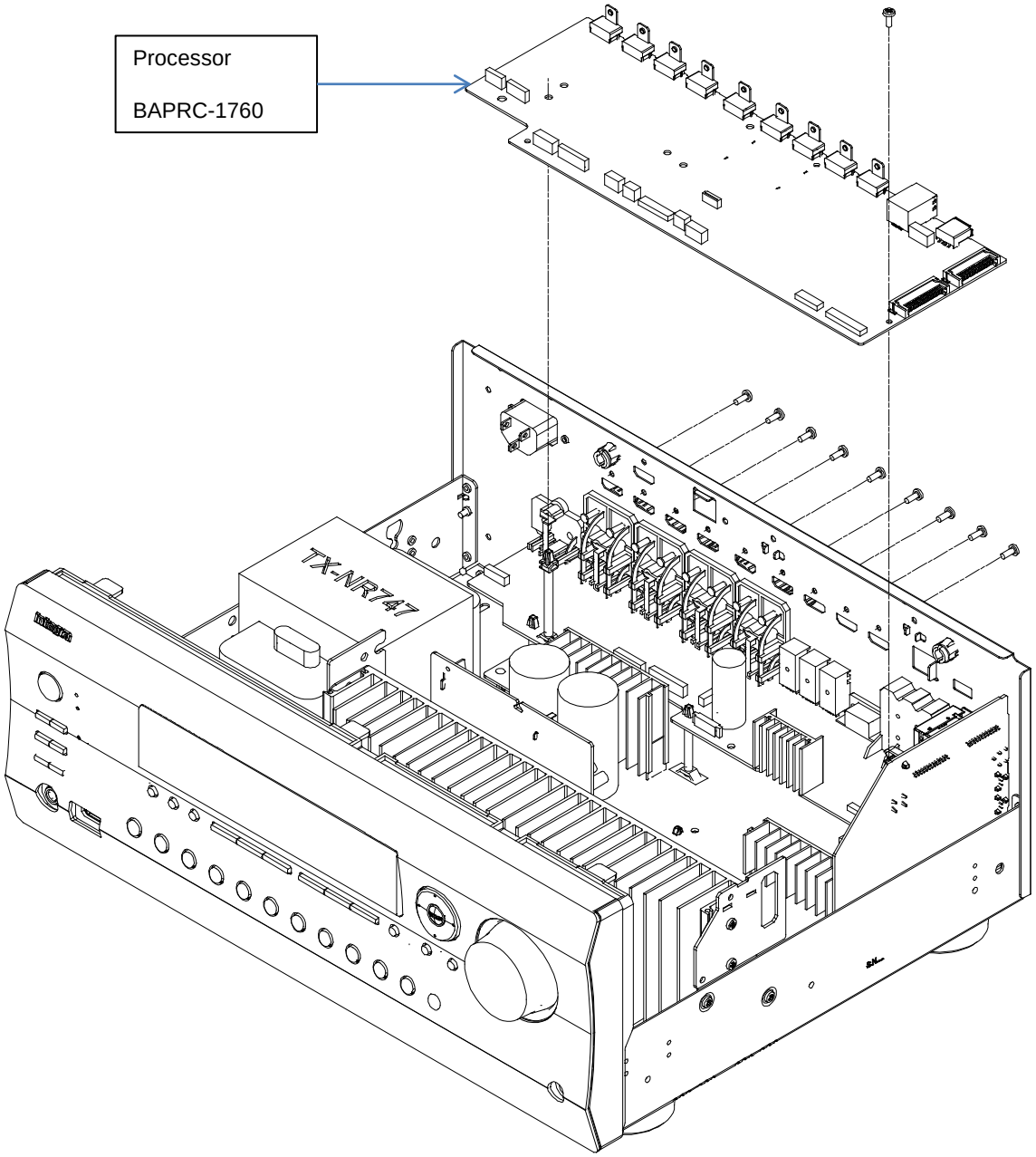

Video/SpeakerTerminal & Tuner & Digital Section

Disassembly

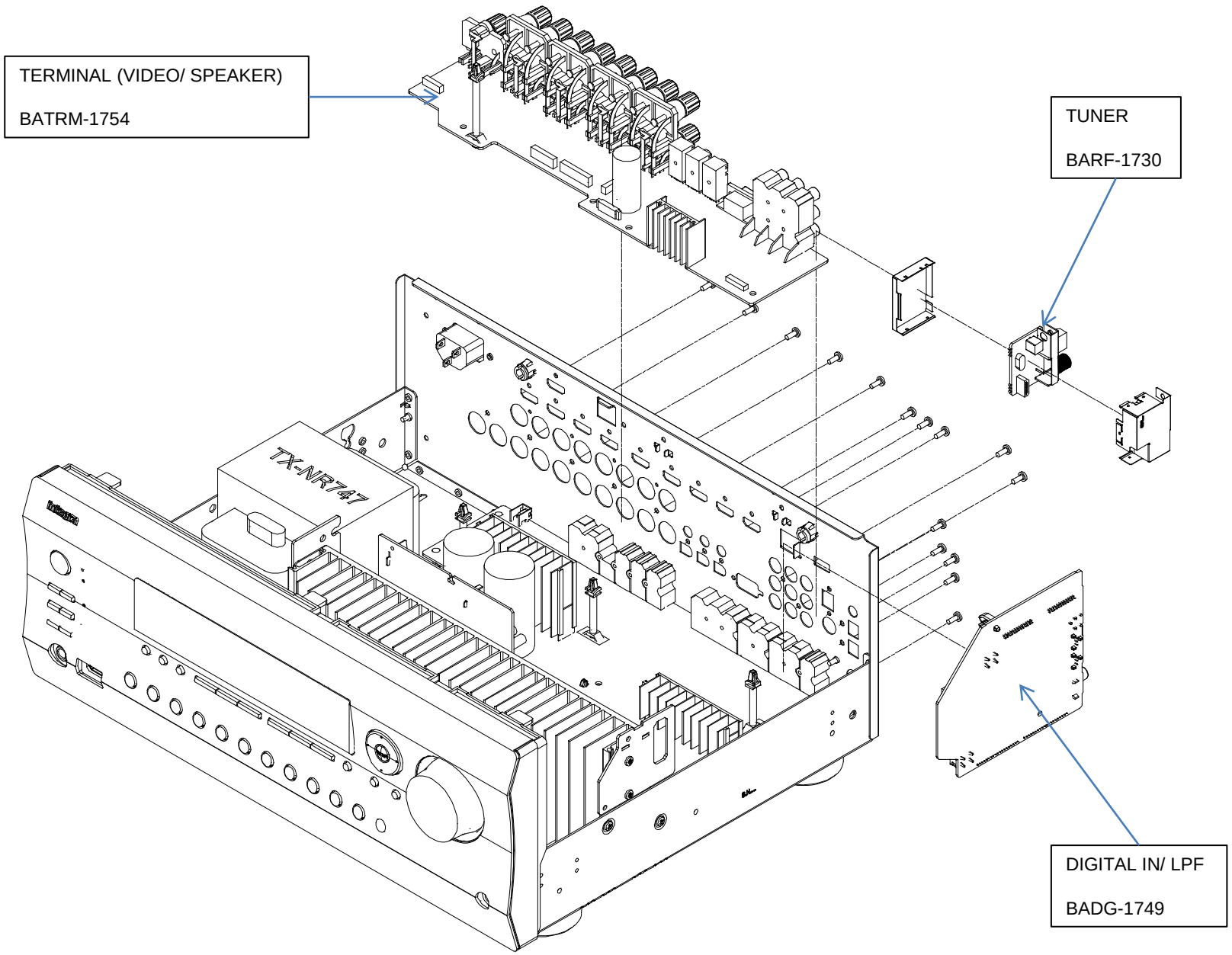

Amplifier Section 1/4

Disassembly

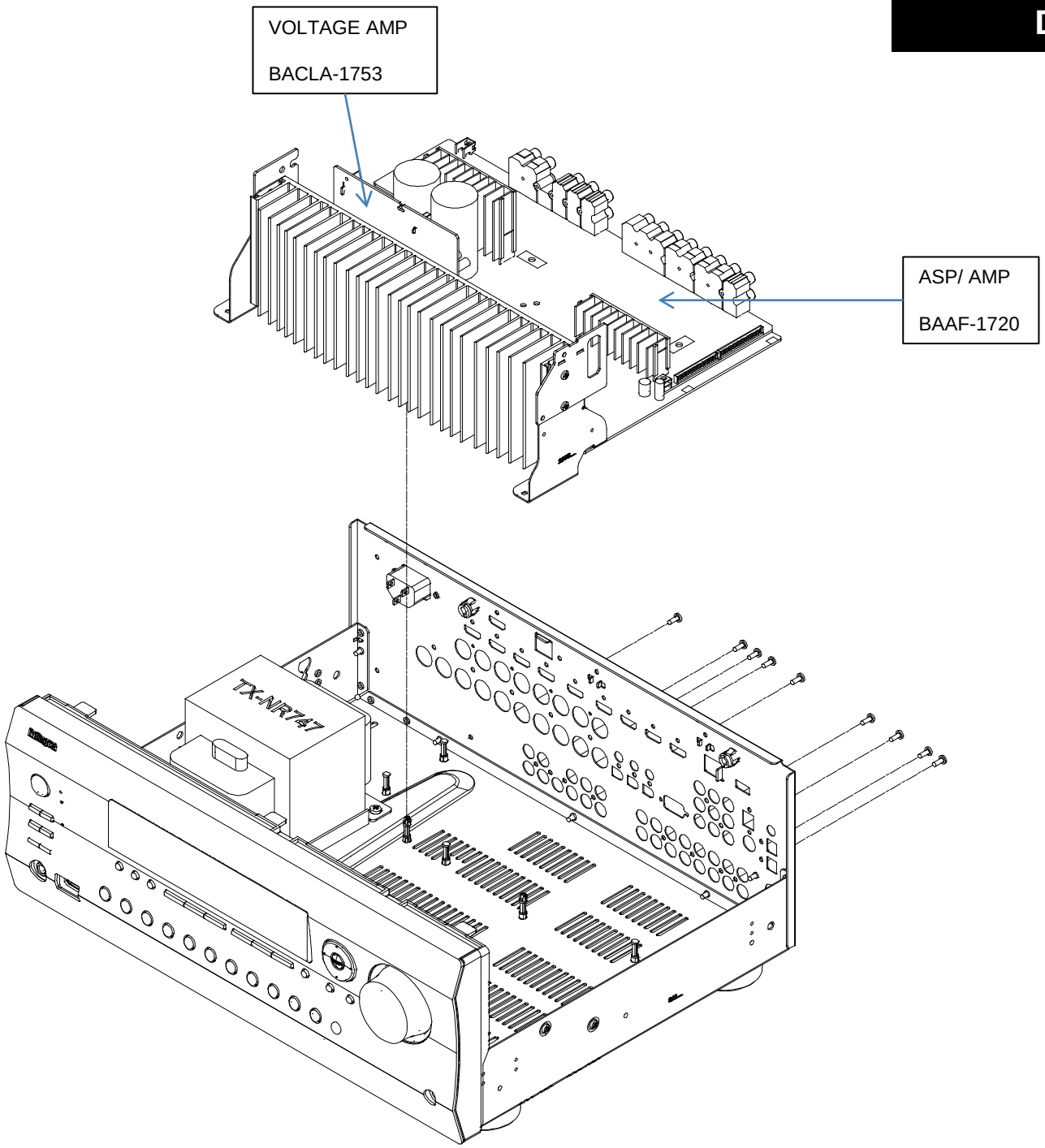

Amplifier Section 2/4

Disassembly

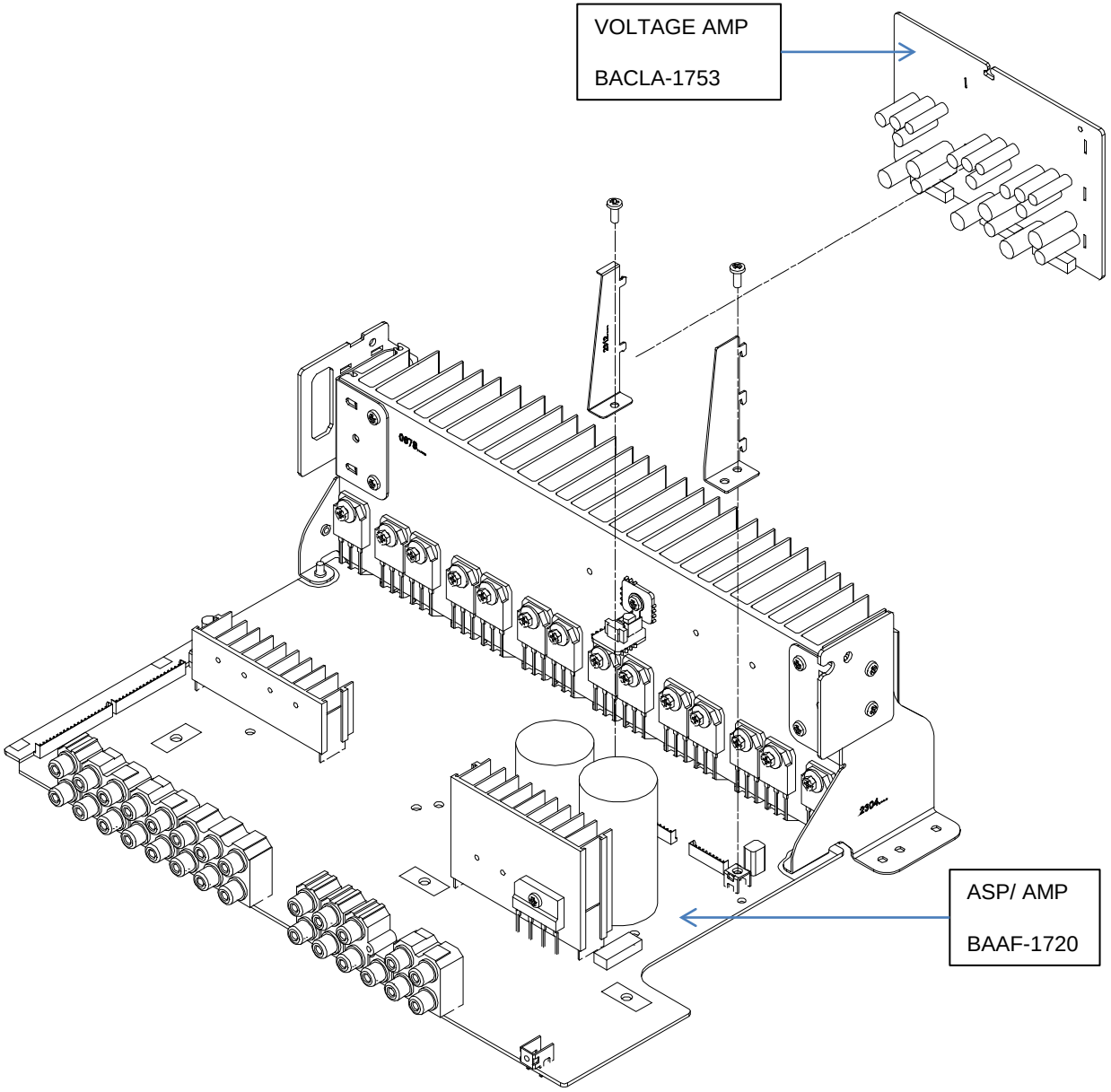

Amplifier Section 3/4

Disassembly

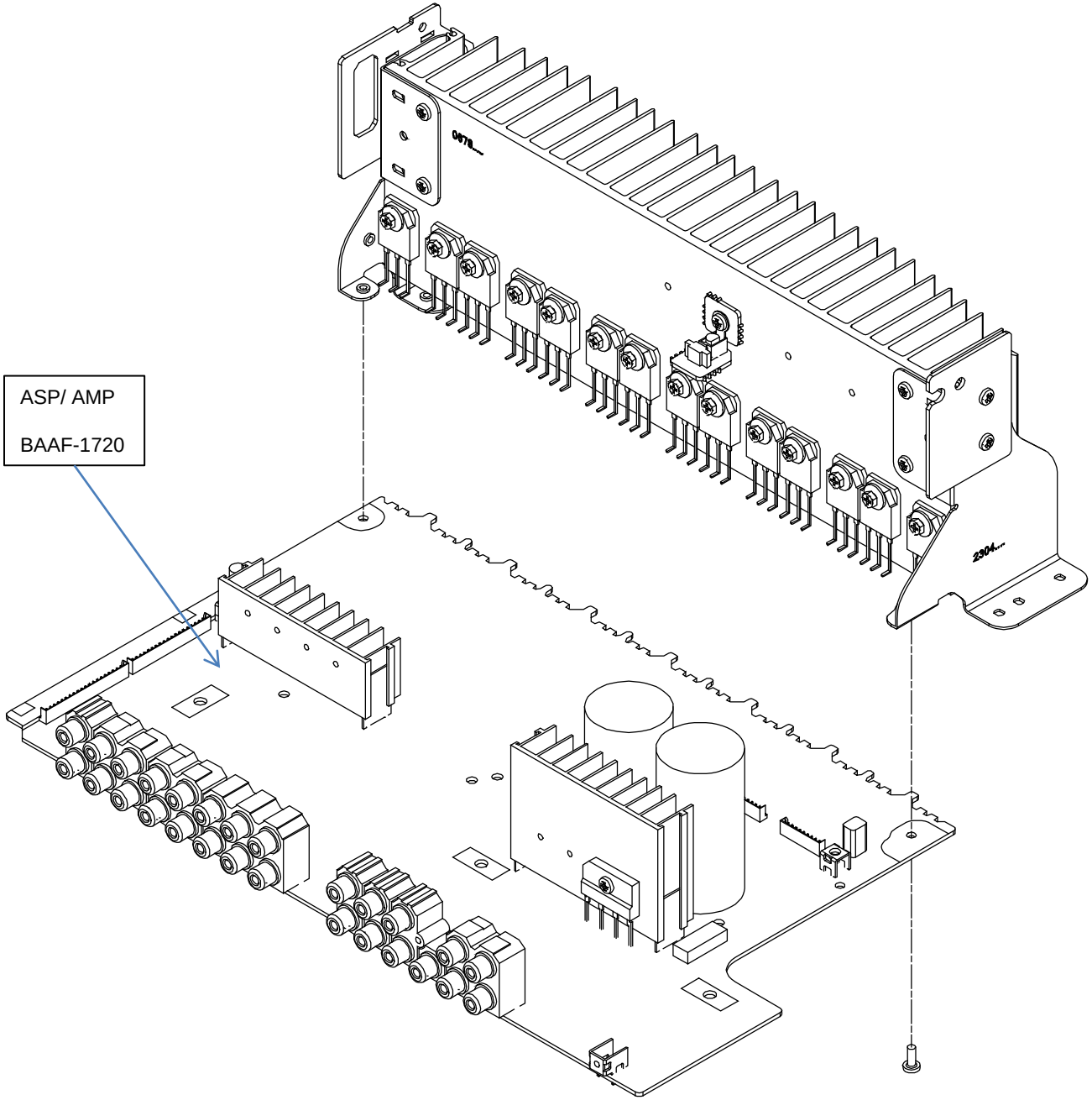

Amplifier Section 4/4

Disassembly

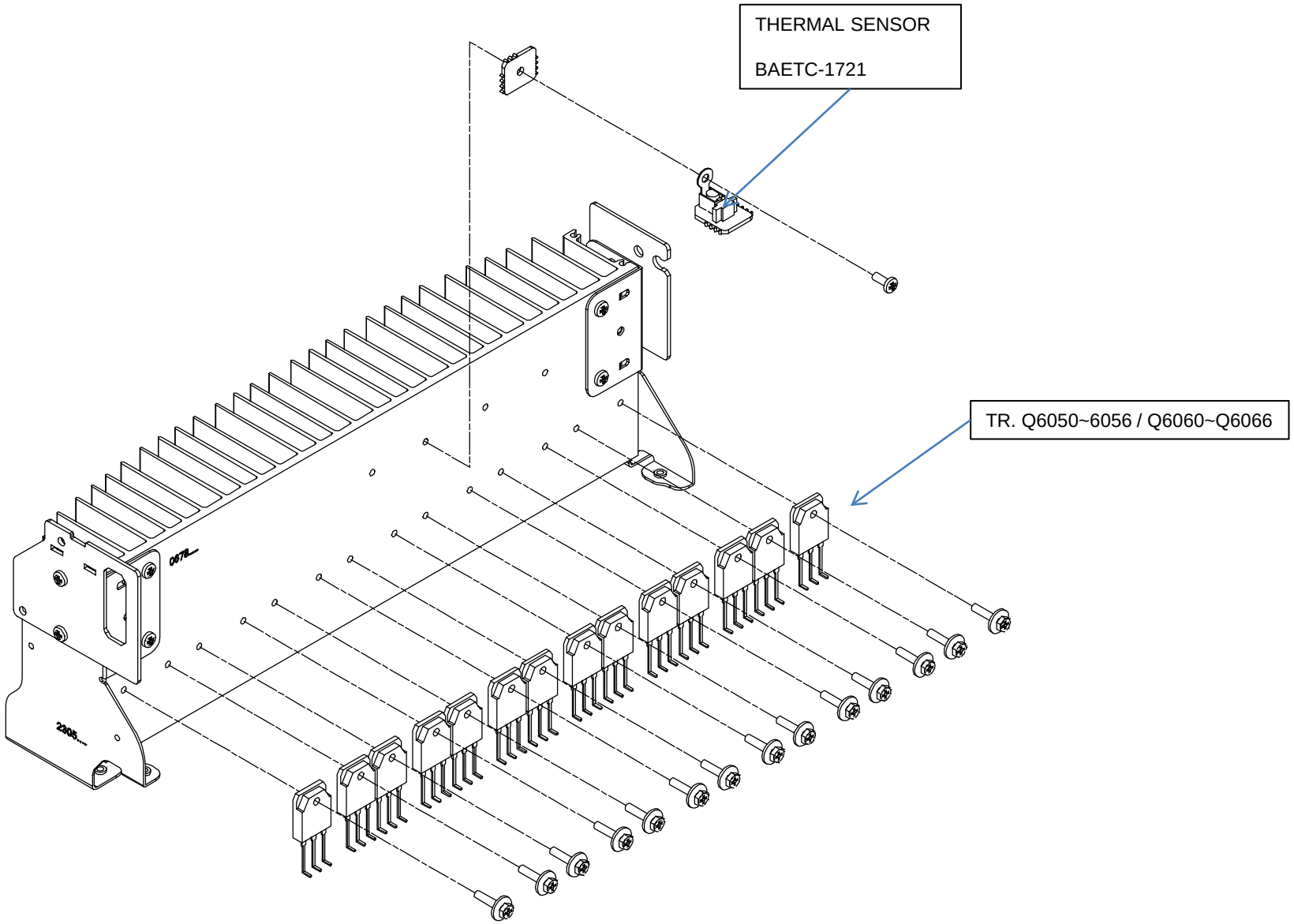

DTR-20.7/30.7/40.7

Block Diagrams (Audio section)

Model Name	Abbreviated Model Name
TX-NR545	T5
TX-NR646	T6
TX-NR747	T7

Model Name	Abbreviated Model Name
DTR-20.7	D2
DTR-30.7	D3
DTR-40.7	D4

Schematic Diagram

MODEL NO. TX-NR545/646/747,DTR-20.7/30.7/40.7 BLOCK DIAGRAM (PART-1) AUDIO SECTION

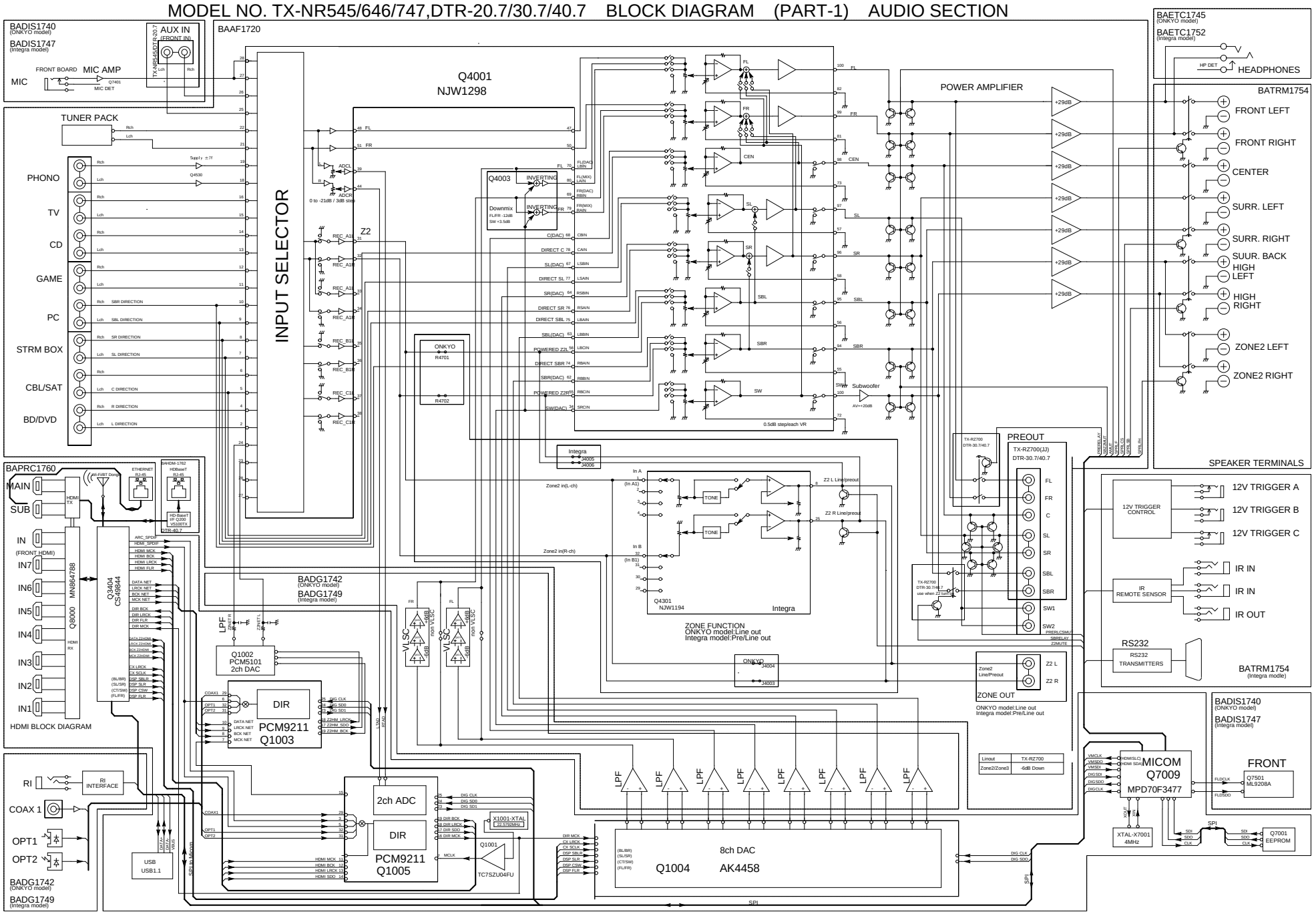

Model No.TX-NR545/646/747,DTR-20.7/30.7/40.7 SCHEMATIC DIAGRAM (PART-2) BLOCK DIAGRAM(VIDEO)

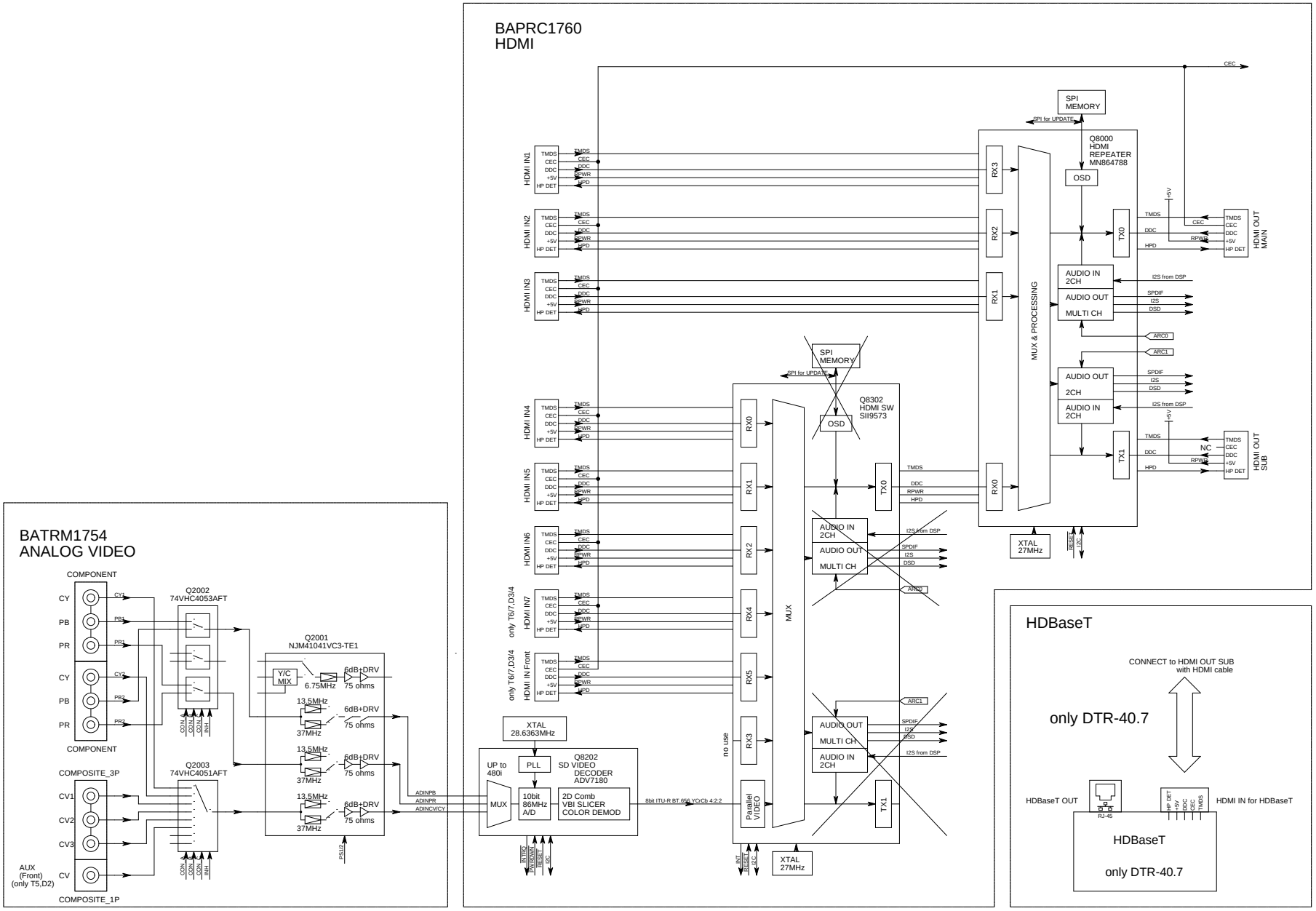

MODEL NO.TX-NR545/646/747,DTR-20.7/30.7/40.7

SCHEMATIC DIAGRAM (PART-3) BLOCK DIAGRAM(Digital Aud

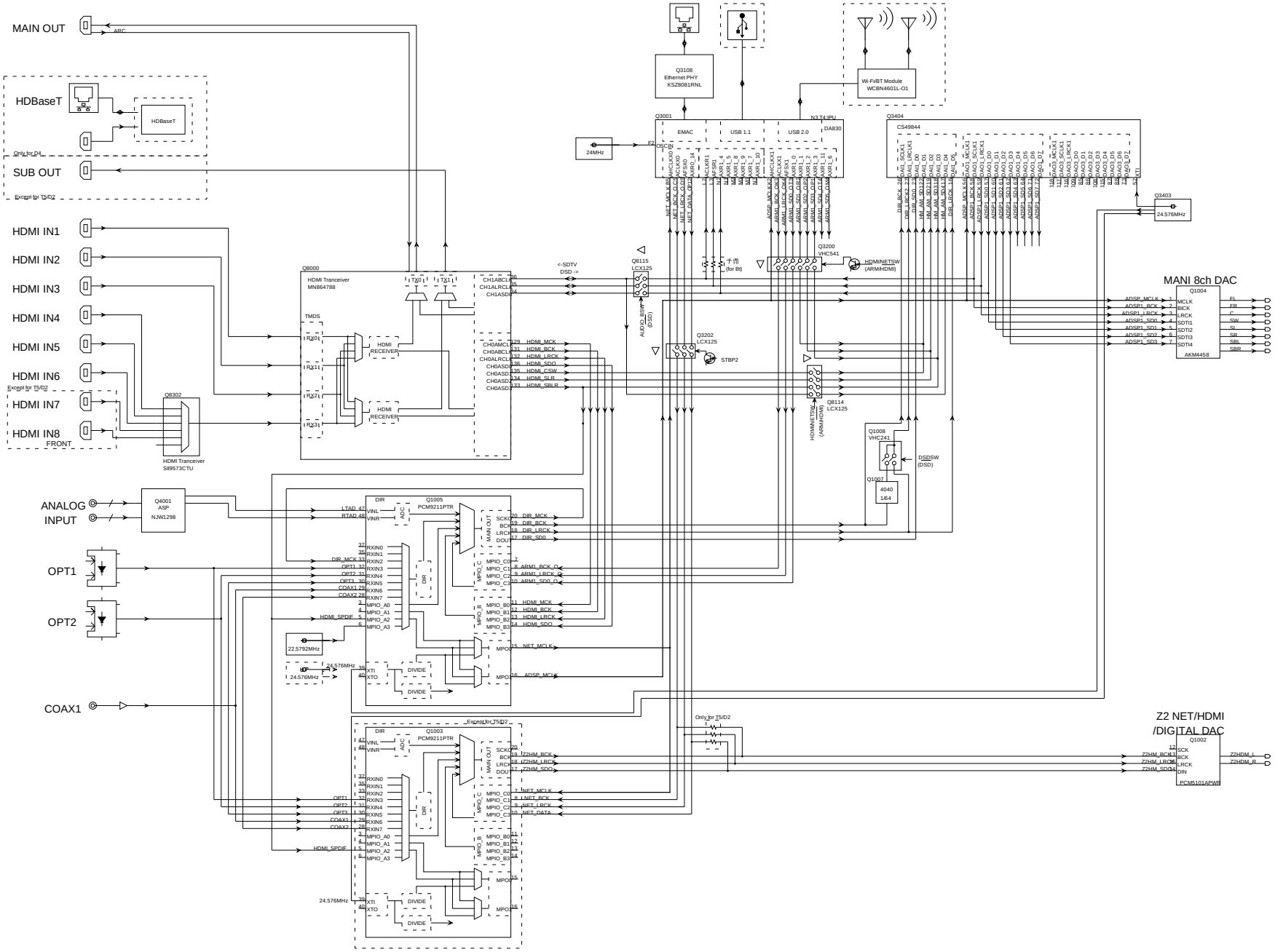

ASP section

Schematic Diagram

MODELNO.TX-NR545/646/747,DTR-20.7/30.7/40.7

SCHEMATIC DIAGRAM (PART-4) ASP SECTION

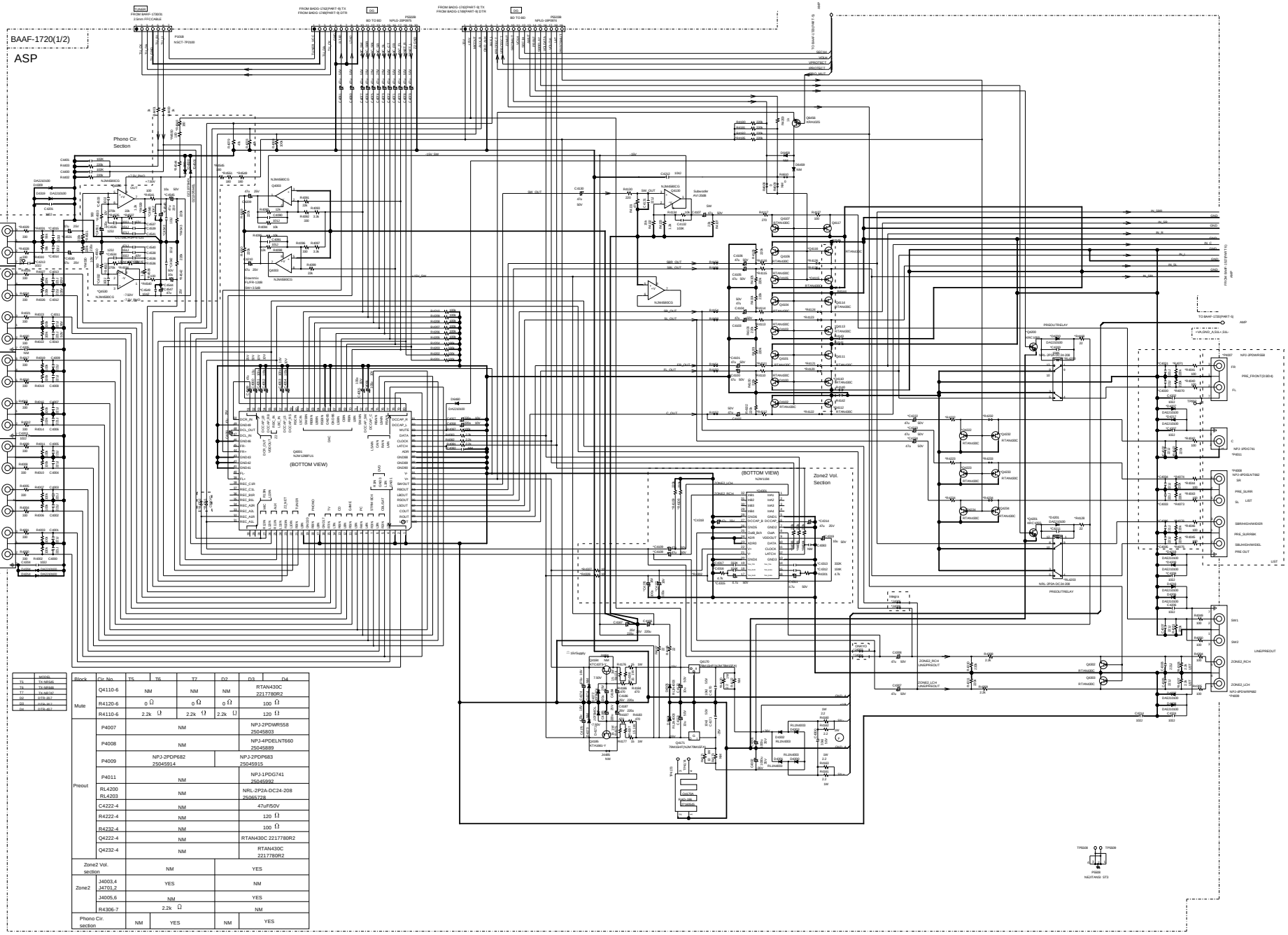

	MODEL
T5	TX-NR545
T6	TX-NR646
T7	TX-NR747
D2	DTR-20.7
D3	DTR-30.7
D4	DTR-40.7

Block	Cir. No.	T5	T6	T7	D2	D3	D4
Mute	Q4110-6	NM		NM	NM	RTAN430C 2217780R2	
	R4120-6	0 Ω		0 Ω	0 Ω	100 Ω	
	R4110-6	2.2k Ω		2.2k Ω	2.2k Ω	120 Ω	
Preout	P4007	NM				NPJ-2PDWR558 25045803	
	P4008	NM				NPJ-4PDELNT660 25045889	
	P4009	NPJ-2PDP682 25045914			NPJ-2PDP683 25045915		
	P4011	NM				NPJ-1PDG741 25045992	
	RL4200 RL4203	NM				NRL-2PZA-DC24-208 25065728	
	C4222-4	NM				47uF/50V	
	R4222-4	NM				120 Ω	
	R4232-4	NM				100 Ω	
	Q4222-4	NM				RTAN430C 2217780R2	
	Q4232-4	NM				RTAN430C 2217780R2	
Zone2 Vol. section		NM				YES	
Zone2	J4003,4 J4701,2	YES				NM	
	J4005,6	NM				YES	
	R4306-7	2.2k Ω				NM	
Phono Cir. section		NM	YES		NM	YES	

AMP section

Schematic Diagram

MODELNO.TX-NR545/646/747,DTR-20.7/30.7/40.7

SCHEMATIC DIAGRAM (PART-5)

AMP SECTION

	MODEL
T5	TX-NR545
T6	TX-NR646
T7	TX-R2330
D2	DTR-20.7
D3	DTR-30.7
D4	DTR-40.7

Table/W	US	EUEX
L6000-06 R6430-36	X	O
JK700-06	O	X

	T5	T6	T7	D2	D3	D4
Block Cap C6401-02	6800u 69V	8200u 69V	10000u 71V	10000u 69V	10000u 69V	10000u 71V
Power Tr Q6050-56	2SC5198	2SC5242		2SC5198	2SC5242	
Power Tr Q6060-66	2SA1941	2SA1962		2SA1941	2SA1962	
IPROTECT R6150-56	3.9k	2.2k		3.9k	2.2k	
R5050-56	8.2k	5.6k		8.2k	5.6k	
R5123-06 R5133-06	150	33		150	33	
R5163-06 R5173-06	150	220		150	220	
R5303-06 R5313-06	33k	39k		33k	39k	
R6073-76	120	150		120	150	
R5000-06	0			0	2.2k	

F6401-F6404 Rating of Fuse
F6401E-F6404E SN of Fuse Label

	Reference	Rating	SN of Label
T5/D2	F6403, F6404	10A / 25V	29362241
T6/D3	F6401, F6402	12A / 50V	---
T7/D4	F6401, F6402	15A / 50V	29362252

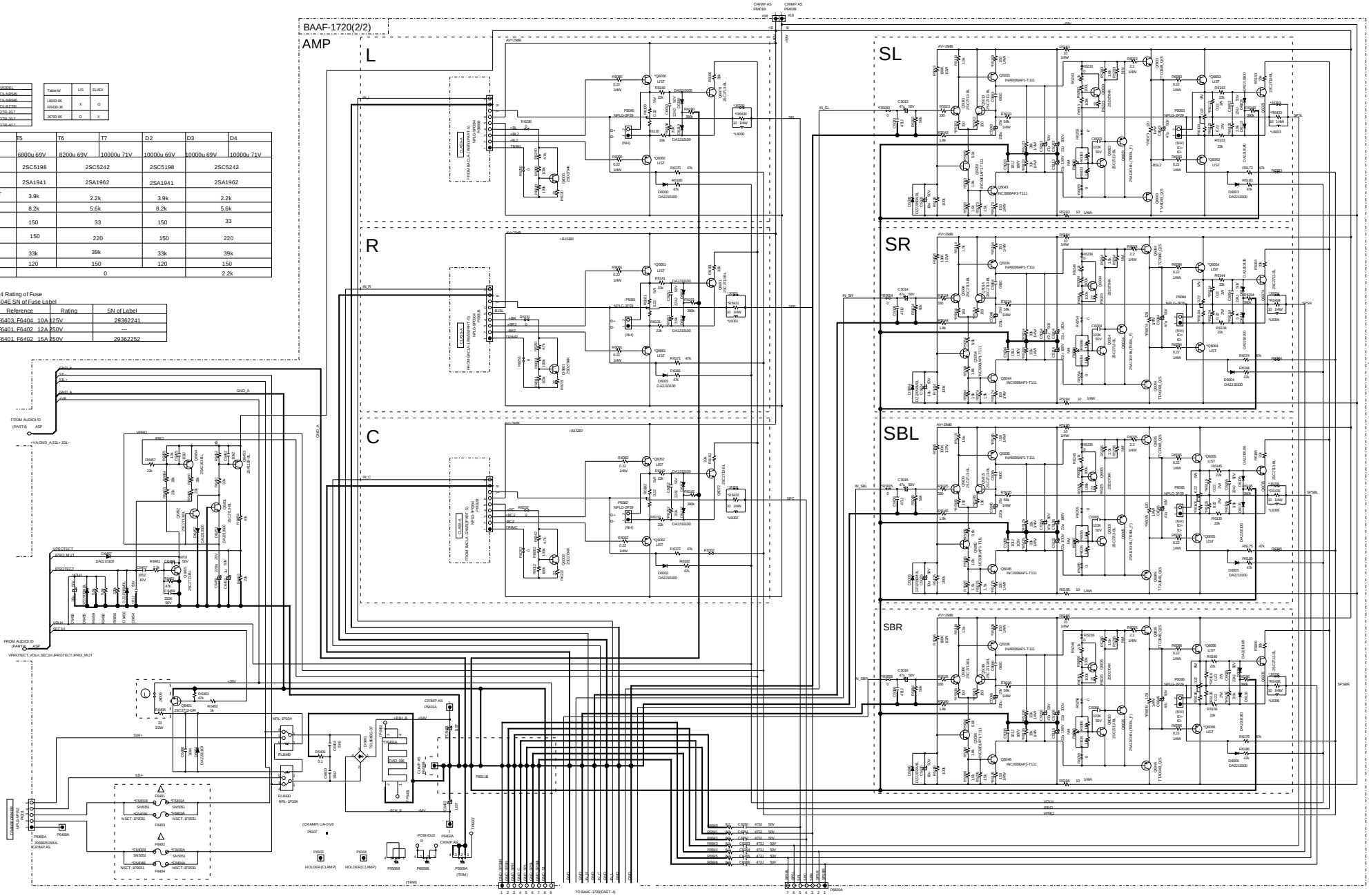

MODEL NO. TX-NR545/646/747, DTR-20.7/30.7/40.7 SCHEMATIC DIAGRAM(PART-5)

AMP SECTION

BACLA-1746 TX-NR545/646/747

BACLA-1753 DTR-20.7/30.7/40.7

CLASS A

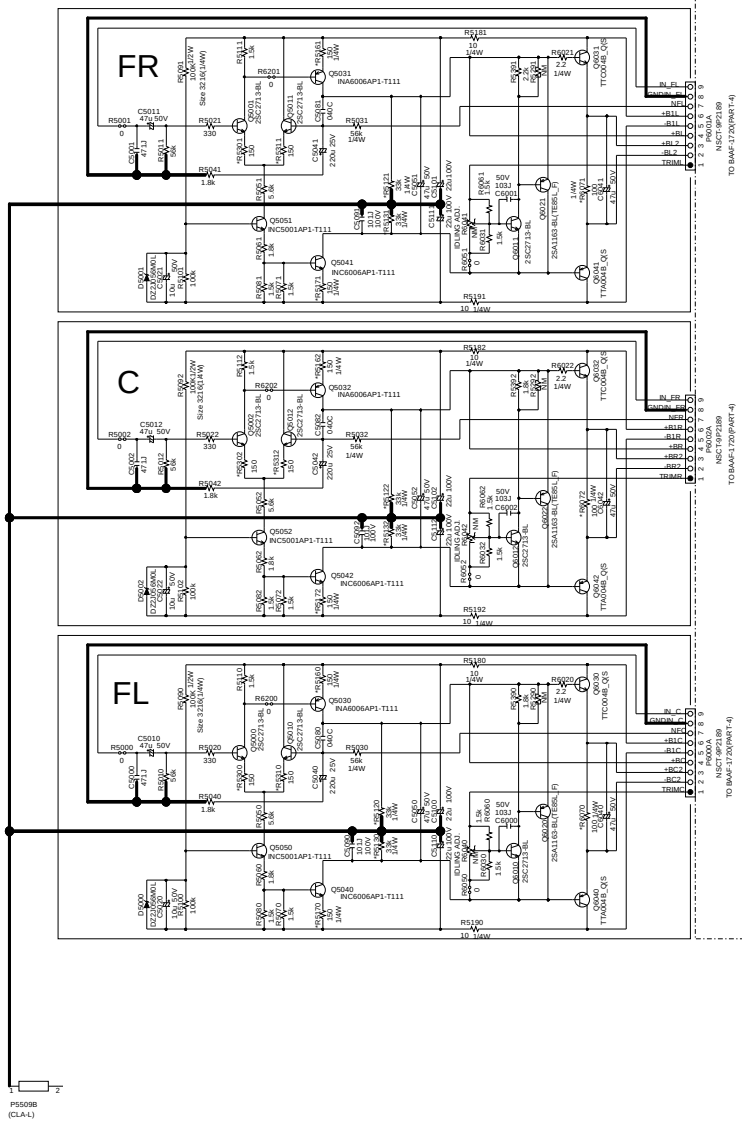

MODEL NO. TX-NR545/646/747, DTR-20.7/30.7/40.7 SCHEMATIC DIAGRAM (PART-6) PS SECTION

THE COMPONENTS IDENTIFIED MARK ⚠ ARE CRITICAL FOR SAFETY, REPLACE ONLY WITH PART NUMBER SPECFIED.
VOLTAGE (MEASURED WITH VOLTMETER) IS DC VOLTAGE. (NO INPUT SIGNAL)
ELECTRLYTIC CAPACITORS (⚠) ARE IN uF/WV.
ALL CAPACITORS ARE IN pF/50WV UNLESS OTHERWISE NOTED.
EX) 030 -> 3pF, 330 -> 33pF, 331 -> 330pF, 333 -> 0.033uF
CIRCUIT IS SUBJECT TO CHANGE FOR IMPROVEMENT.

⚠ 印は火災、感電の危険に関与する部品の為、必ず指定部品を使用の事。
電圧表示は無信号時に測定した直流電圧を示す。
記入なき電解コンデンサの単位はuF/WVである。
記入なきコンデンサの単位はpF/50WVである。
例) 030 -> 3pF, 330 -> 33pF, 331 -> 330pF, 333 -> 0.033uF
本配線図は基本配線図につき性能改善等により予告なく変更する事がある。

CAUTION
FOR CONTINUED PROTECTION AGAINST FIRE HAZARD,
REPLACE ONLY WITH FUSE OF SAME TYPE AND RATING INDICATED.

CAUTIONF ATTENTION
AFIN D'ASSURER UNE PROTECTION PERMANENTE CONTRE LES RISQUES D'INCENDIE,
REMPLACER UNIQUEMENT PAR UN FUSIBLE DE MEME TYPE ET CALIBRATION COMME INDIQUE.

THIS SYMBOL LOCATED NEAR THE FUSE INDICATES THAT THE FUSE USED IS SLOW OPERATING TYPE
FOR CONTINUED PROTECTION AGAINST FIRE FUSE HAZARD, REPLACE WITH SAME TYPE FUSE.
RATING REFER TO THE MAKING ADJACENT TO THE SYMBOL.

CE SYMBOLE INDIQUE QUE LE FUSIBLE UTLISE EST A LENT, E POUR UNEPROTECTION PERMANENT,
N'UTILISER QUE DES FUSIBLES DE MEME TYPE.
CE DARNIER EST INDIQUE LA QU LE PRESENT SYMBOL EST APPOSE.

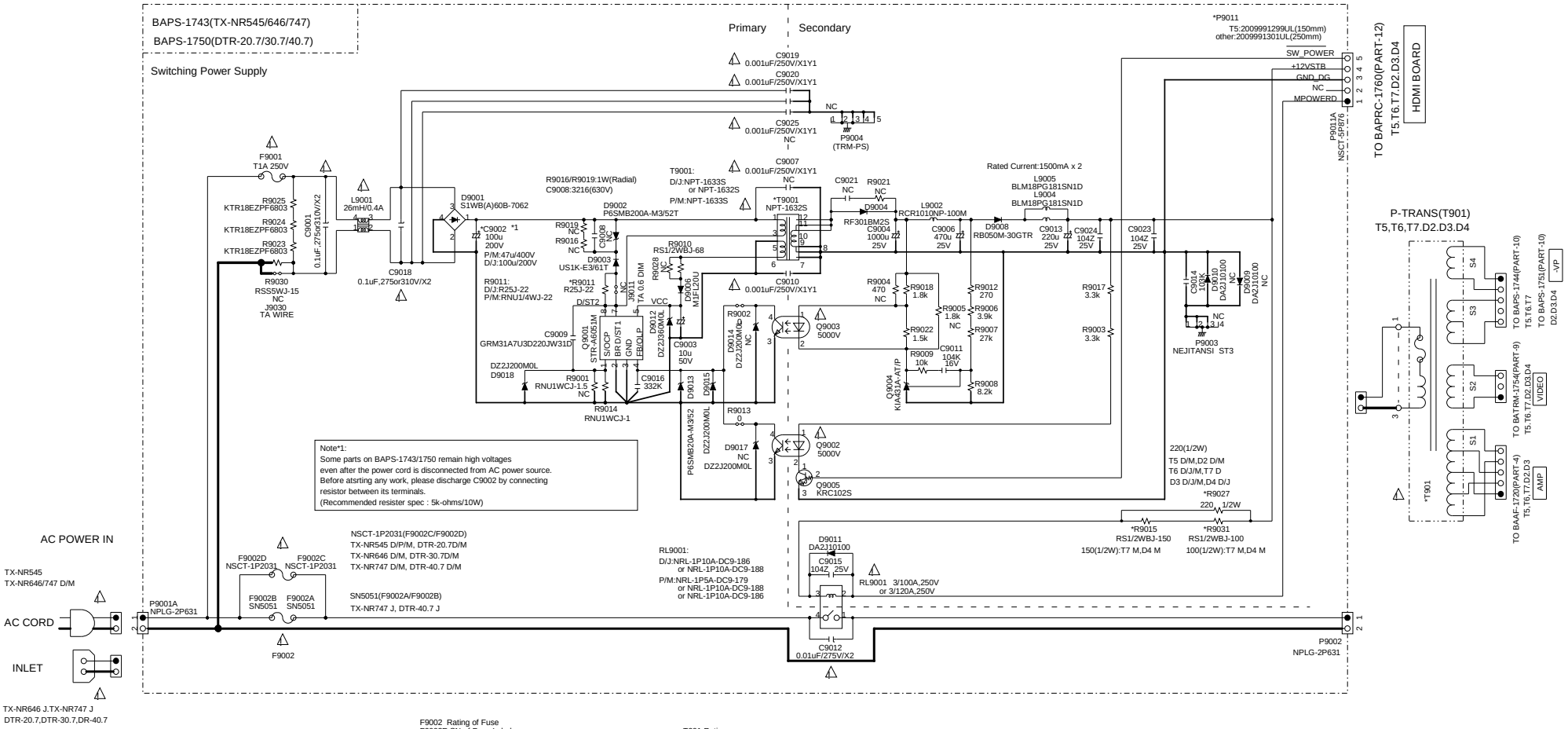

	MODEL
T5	TX-NR545
T6	TX-NR646
T7	TX-NR747
D2	DTR-20.7
D3	DTR-30.7
D4	DTR-40.7

TYPE	AC
D	120Vac,60Hz
P	230Vac,50Hz
M	220-240Vac,50/60Hz
J	100Vac,50/60Hz

F9002 Rating of Fuse
F9002E SN of Fuse Label

TYPE	T5/D2	T6/D3	T7/D4
D	8A 125V 29360842	10A 125V	10A 125V
P	T4AL250V 29361732A	---	---
M	T4AL250V 29361732A	T5AL250V 29361938	T5AL250V 29361938
J	---	12A 125V 29392136	---

T901 Rating

TYPE	T5/D2	T6/D3	T7/D4
D	NPT-1656D	NPT-1651D	NPT-1652D
M	NPT-1650M	NPT-1651M	NPT-1652M
J	---	NPT-1651J	---

Terminal (video/ speaker out) section

Schematic Diagram

MODEL No. TX-NR545/646/747,DTR-20.7/30.7/40.7

SCHEMATIC DIAGRAM(PART-7) VIDEO/SPOUT/12VTRG SECTION

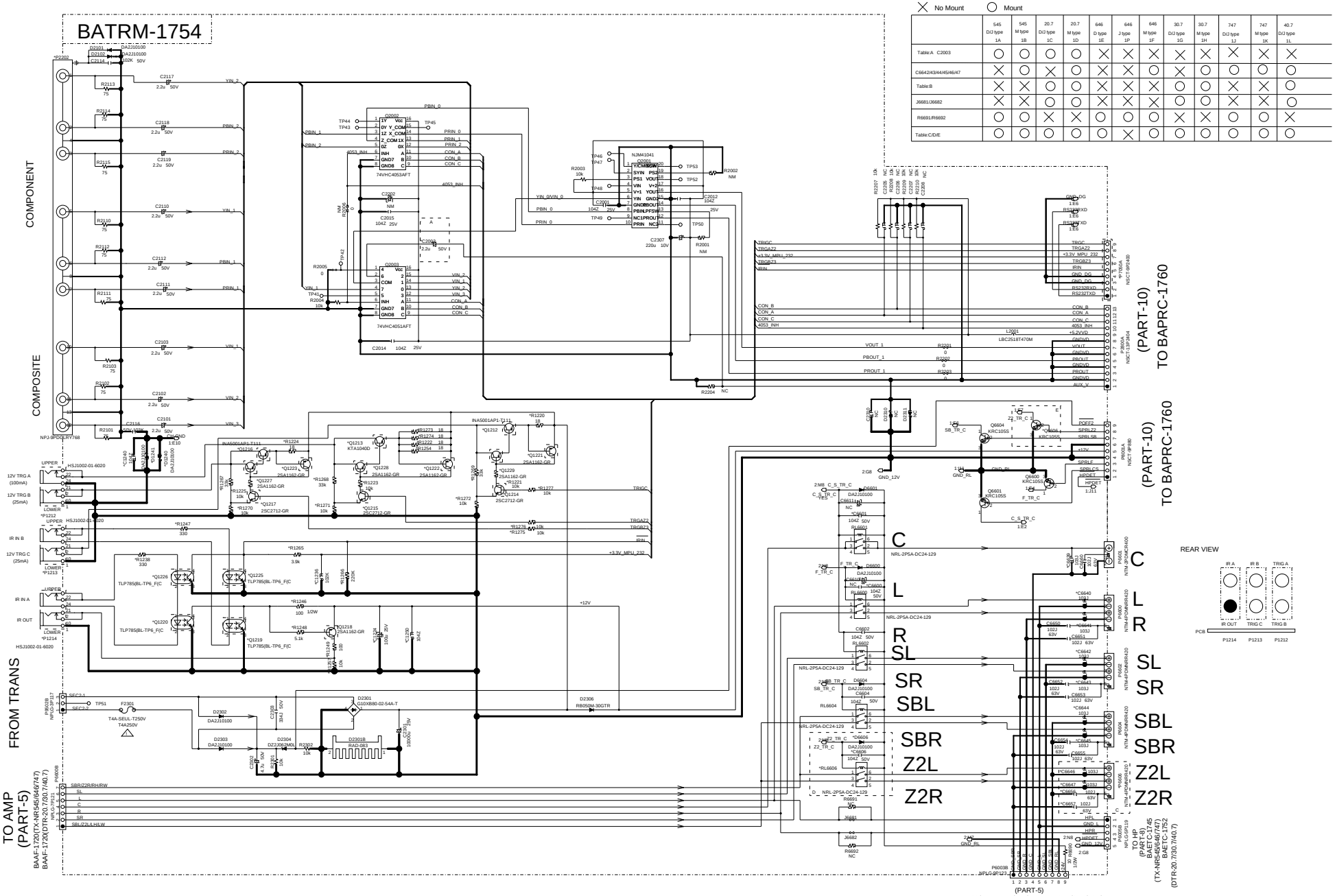

	545 D/J type 1A	545 M type 1B	20.7 D/J type 1C	20.7 M type 1D	646 D type 1E	646 J type 1P	646 M type 1F	30.7 D/J type 1G	30.7 M type 1H	747 D/J type 1J	747 M type 1K	40.7 D/J type 1L
Table:A C2003	○	○	○	○	×	×	×	×	×	×	×	×
C6642/43/44/45/46/47	×	○	×	○	×	×	○	×	○	○	○	○
Table:B	×	×	○	○	×	×	×	○	○	×	×	○
J6681/J6682	×	×	○	○	×	×	×	○	○	×	×	○
R6691/R6692	○	○	×	×	○	○	○	×	×	○	○	×
Table:C/D/E	○	○	○	○	○	×	○	○	○	○	○	○

× No Mount ○ Mount

Schematic Diagram

Model No.DTR-20.7/30.7/40.7 SCHEMATIC DIAGRAM(PART-7) RS-232C SECTION

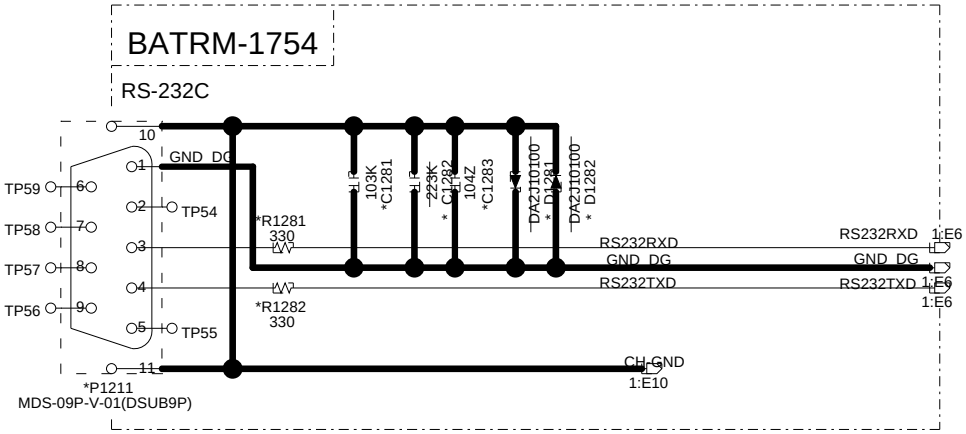

MODEL NO. TX-NR545/646/747 SCHEMATIC DIAGRAM (PART-8) DISPLAY SECTION

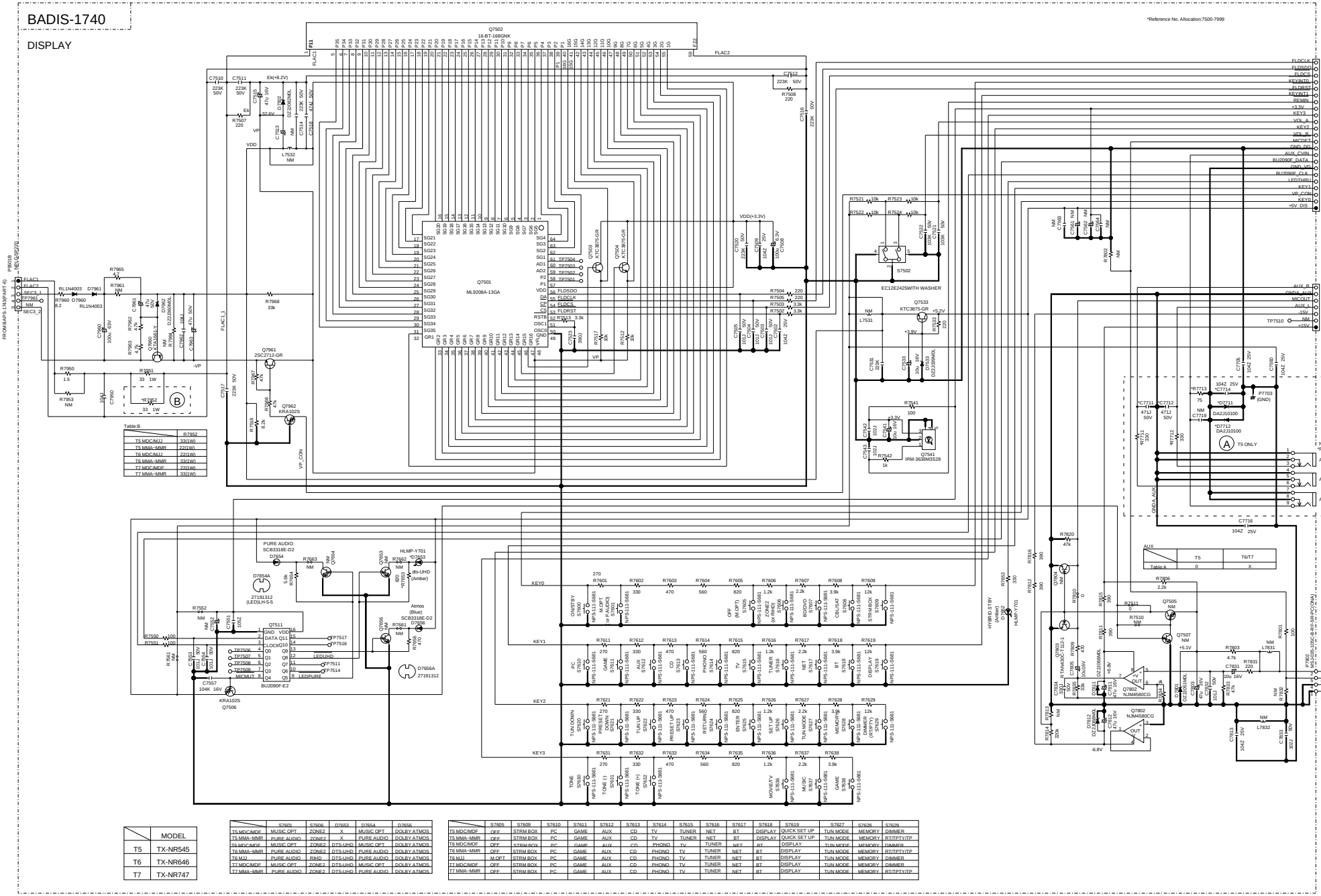

	MODEL
T5	TX-NR545
T6	TX-NR646
T7	TX-NR747

	S7601	S7606	D7653	D7654	D7656
T5 MDC/MDF	MUSIC OPT	ZONE2	X	MUSIC OPT	DOLBY ATMOS
T5 MMA~MMR	PURE AUDIO	ZONE2	X	PURE AUDIO	DOLBY ATMOS
T6 MDC/MDF	MUSIC OPT	ZONE2	DTS-UHD	MUSIC OPT	DOLBY ATMOS
T6 MMA~MMR	PURE AUDIO	ZONE2	DTS-UHD	PURE AUDIO	DOLBY ATMOS
T6 MJJ	PURE AUDIO	RHD	DTS-UHD	PURE AUDIO	DOLBY ATMOS
T7 MDC/MDF	MUSIC OPT	ZONE2	DTS-UHD	MUSIC OPT	DOLBY ATMOS
T7 MMA~MMR	PURE AUDIO	ZONE2	DTS-UHD	PURE AUDIO	DOLBY ATMOS

	S7605	S7609	S7610	S7611	S7612	S7613	S7614	S7615	S7616	S7617	S7618	S7619	S7627	S7628	S7629
T5 MDC/MDF	OFF	STRM BOX	PC	GAME	AUX	CD	TV	TUNER	NET	BT	DISPLAY	QUICK SET UP	TUN MODE	MEMORY	DIMMER
T5 MMA~MMR	OFF	STRM BOX	PC	GAME	AUX	CD	TV	TUNER	NET	BT	DISPLAY	QUICK SET UP	TUN MODE	MEMORY	RT/TPTY/TP
T6 MDC/MDF	OFF	STRM BOX	PC	GAME	AUX	CD	PHONO	TV	TUNER	NET	BT	DISPLAY	TUN MODE	MEMORY	DIMMER
T6 MMA~MMR	OFF	STRM BOX	PC	GAME	AUX	CD	PHONO	TV	TUNER	NET	BT	DISPLAY	TUN MODE	MEMORY	RT/TPTY/TP
T6 MJJ	M.OPT	STRM BOX	PC	GAME	AUX	CD	PHONO	TV	TUNER	NET	BT	DISPLAY	TUN MODE	MEMORY	DIMMER
T7 MDC/MDF	OFF	STRM BOX	PC	GAME	AUX	CD	PHONO	TV	TUNER	NET	BT	DISPLAY	TUN MODE	MEMORY	DIMMER
T7 MMA~MMR	OFF	STRM BOX	PC	GAME	AUX	CD	PHONO	TV	TUNER	NET	BT	DISPLAY	TUN MODE	MEMORY	RT/TPTY/TP

MODEL NO. TX-NR545/646/747 SCHEMATIC DIAGRAM

(PART-8) DISPLAY SECTION

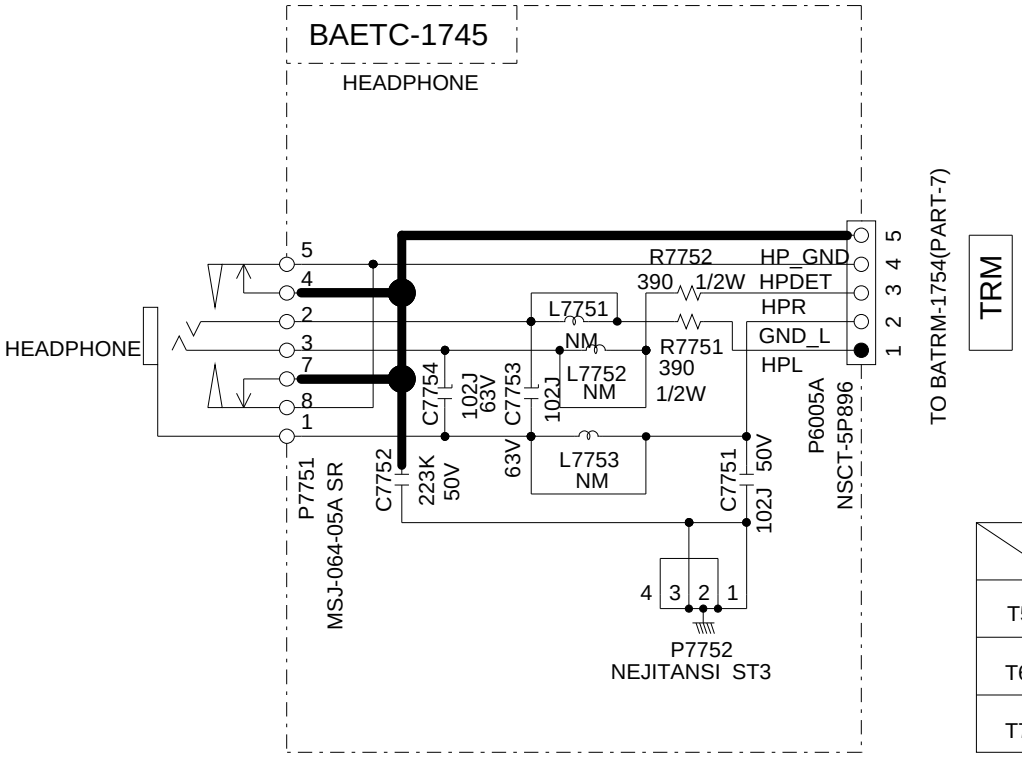

	MODEL
T5	TX-NR545
T6	TX-NR646
T7	TX-NR747

MODEL NO. DTR-20.7/30.7/40.7 SCHEMATIC DIAGRAM(PART-8)

DISPLAY SECTION

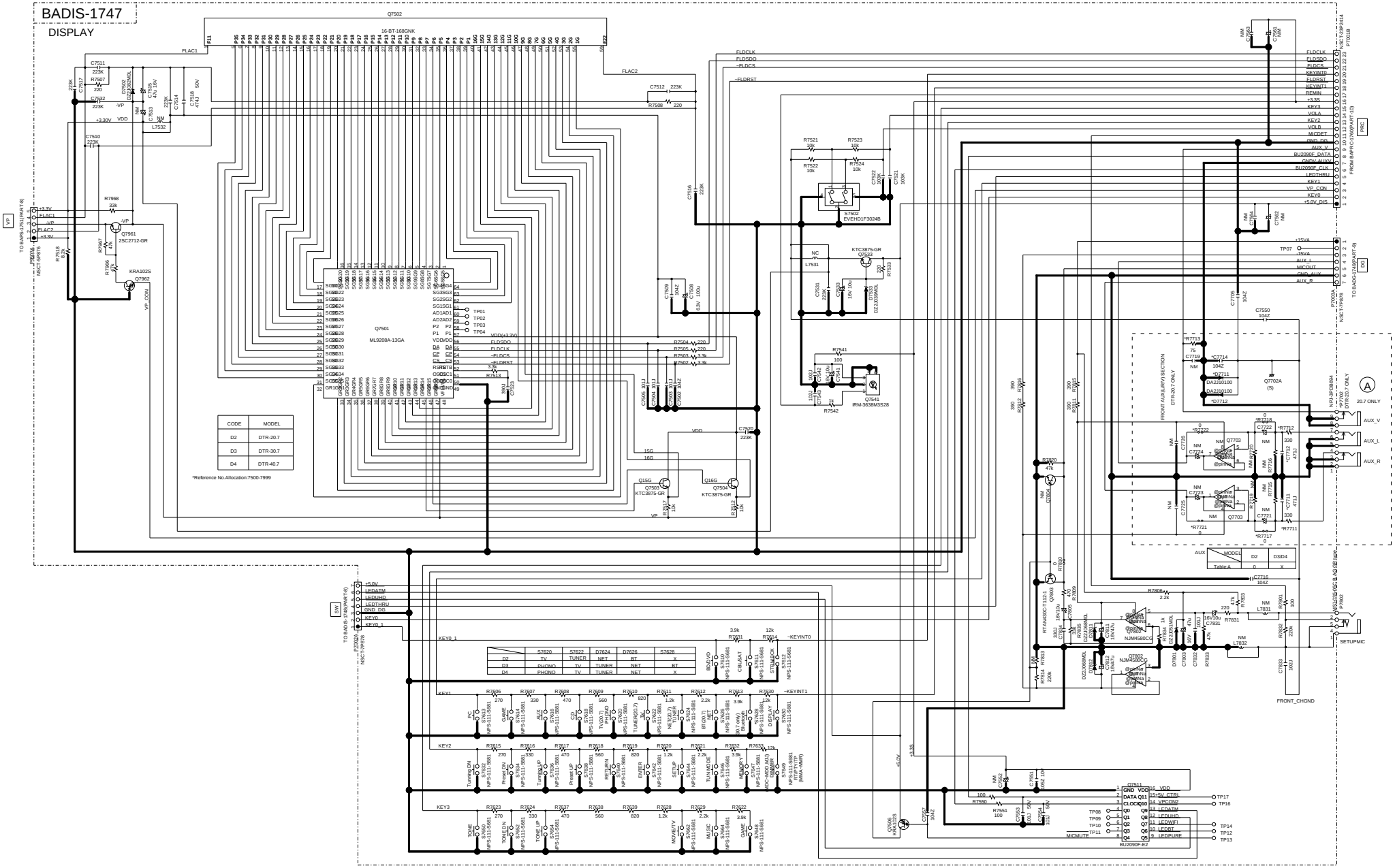

CODE	MODEL
D2	DTR-20.7
D3	DTR-30.7
D4	DTR-40.7

*Reference No.Allocation:7500-7999

	S7620	S7622	D7624	D7626	S7628
D2	TV	TUNER	NET	RT	X
D3	PHONO	TV	TUNER	NET	BT
D4	PHONO	TV	TUNER	NET	X

AUX	MODEL	D2	D3/D4
	Table A	0	X

MODEL NO. DTR-20.7/30.7/40.7 SCHEMATIC DIAGRAM(PART-8)

SW SECTION

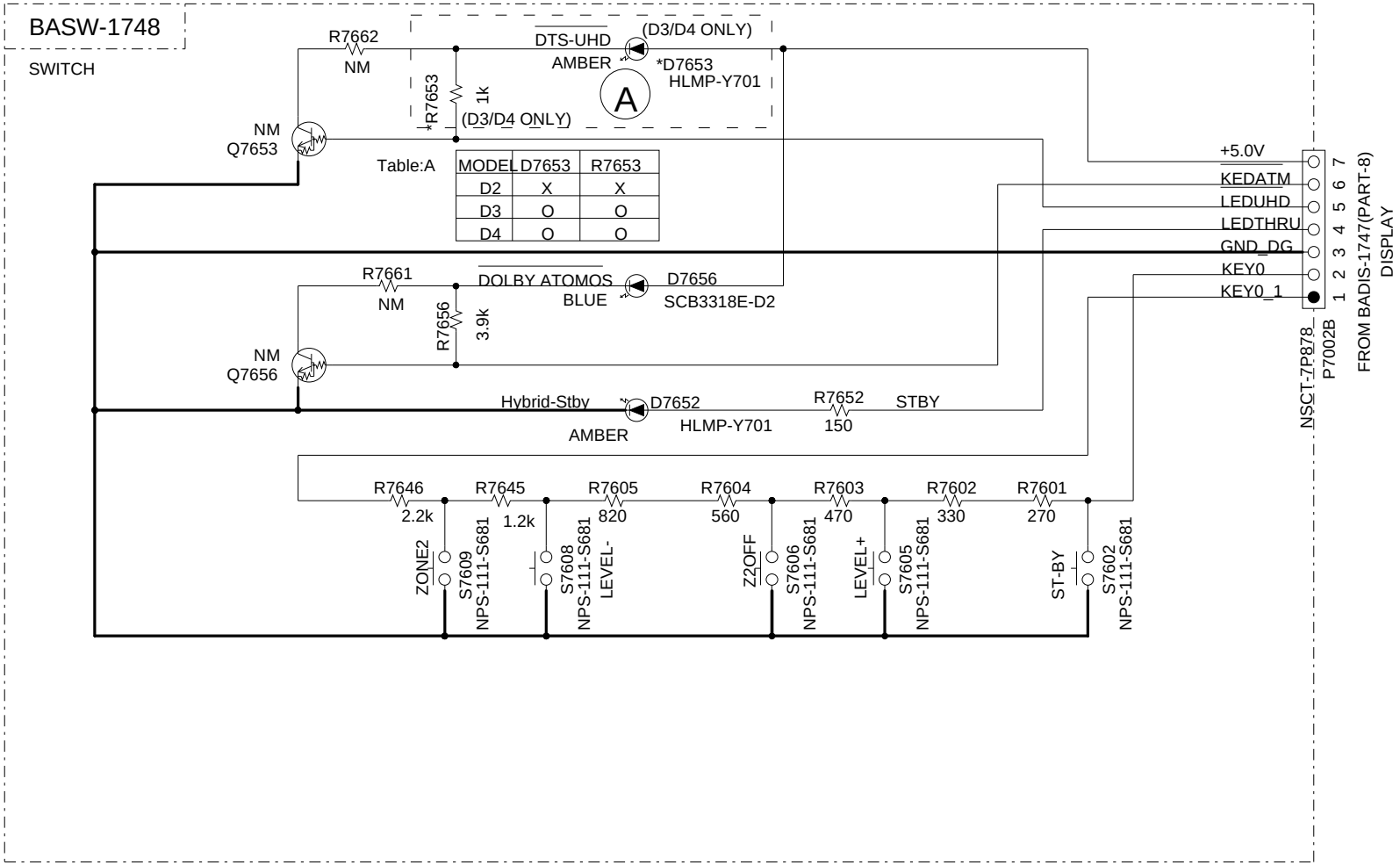

Schematic Diagram

MODEL NO. DTR-20.7/30.7/40.7 SCHEMATIC DIAGRAM(PART-8)
VP SECTION

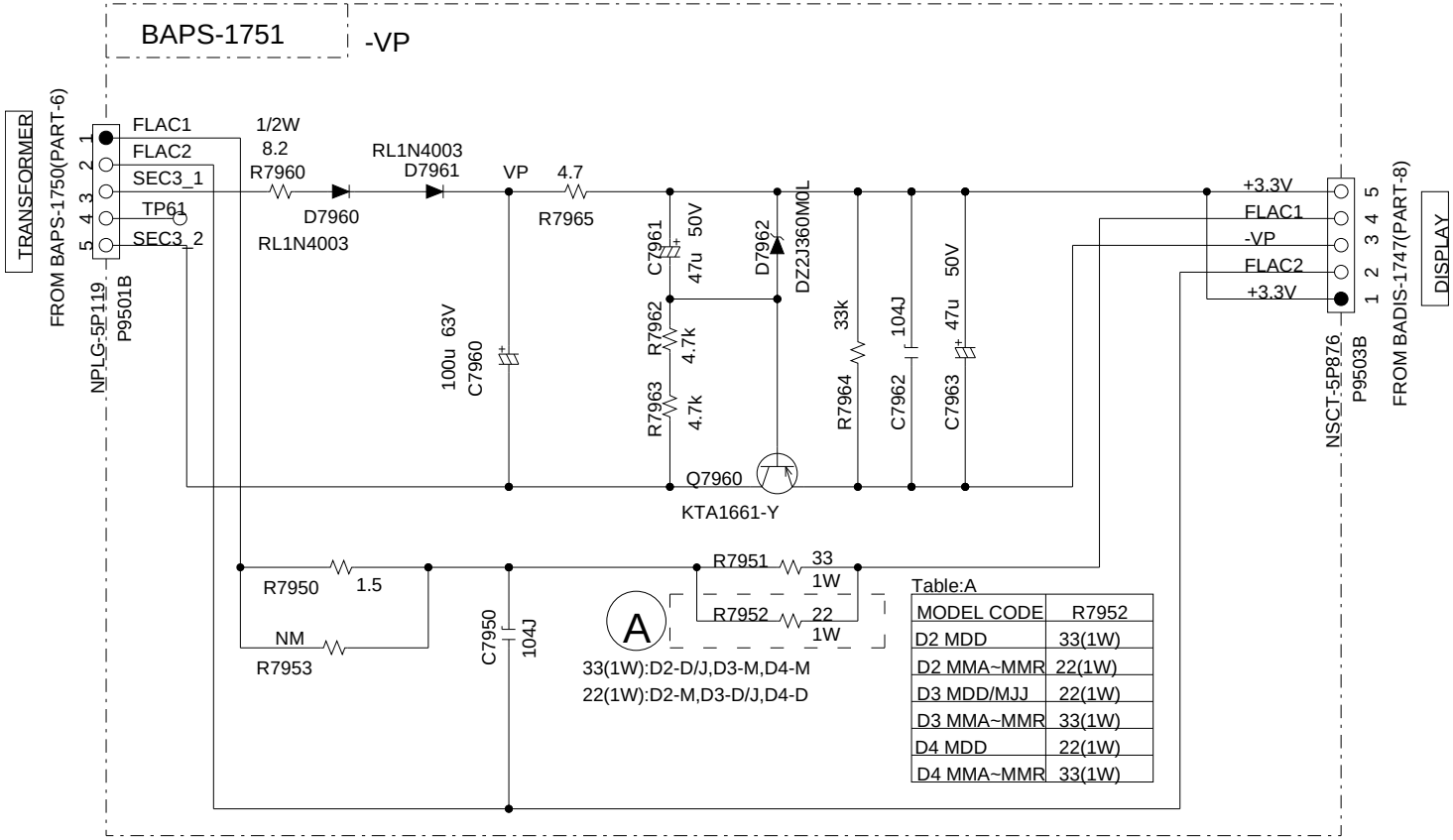

Table:A

MODEL CODE	R7952
D2 MDD	33(1W)
D2 MMA~MMR	22(1W)
D3 MDD/MJJ	22(1W)
D3 MMA~MMR	33(1W)
D4 MDD	22(1W)
D4 MMA~MMR	33(1W)

Schematic Diagram

MODEL NO. DTR-20.7/30.7/40.7 SCHEMATIC DIAGRAM(PART-8)

H/P SECTION

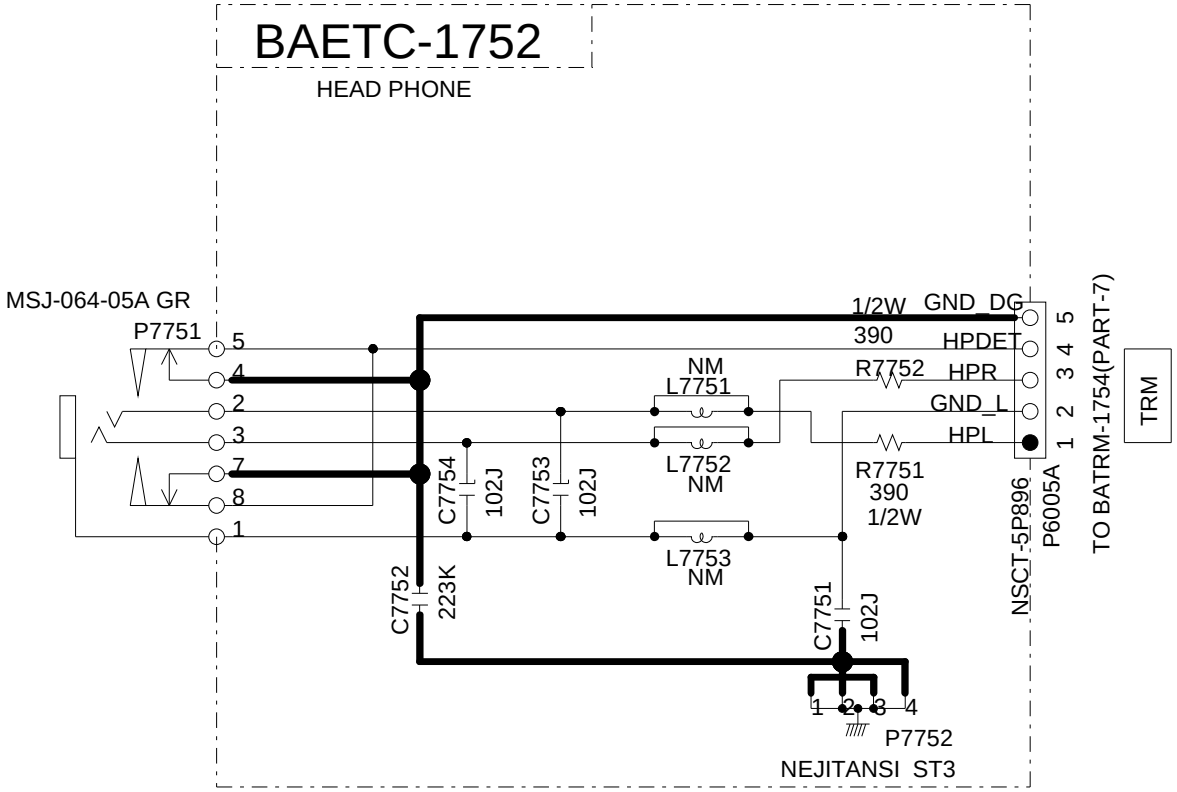

Bluetooth module connector section

Schematic Diagram

MODEL NO.TX-NR545/646/747, DTR-20.7/30.7/40.7

SCHEMATIC DIAGRAM(PART-9)DG SECTION

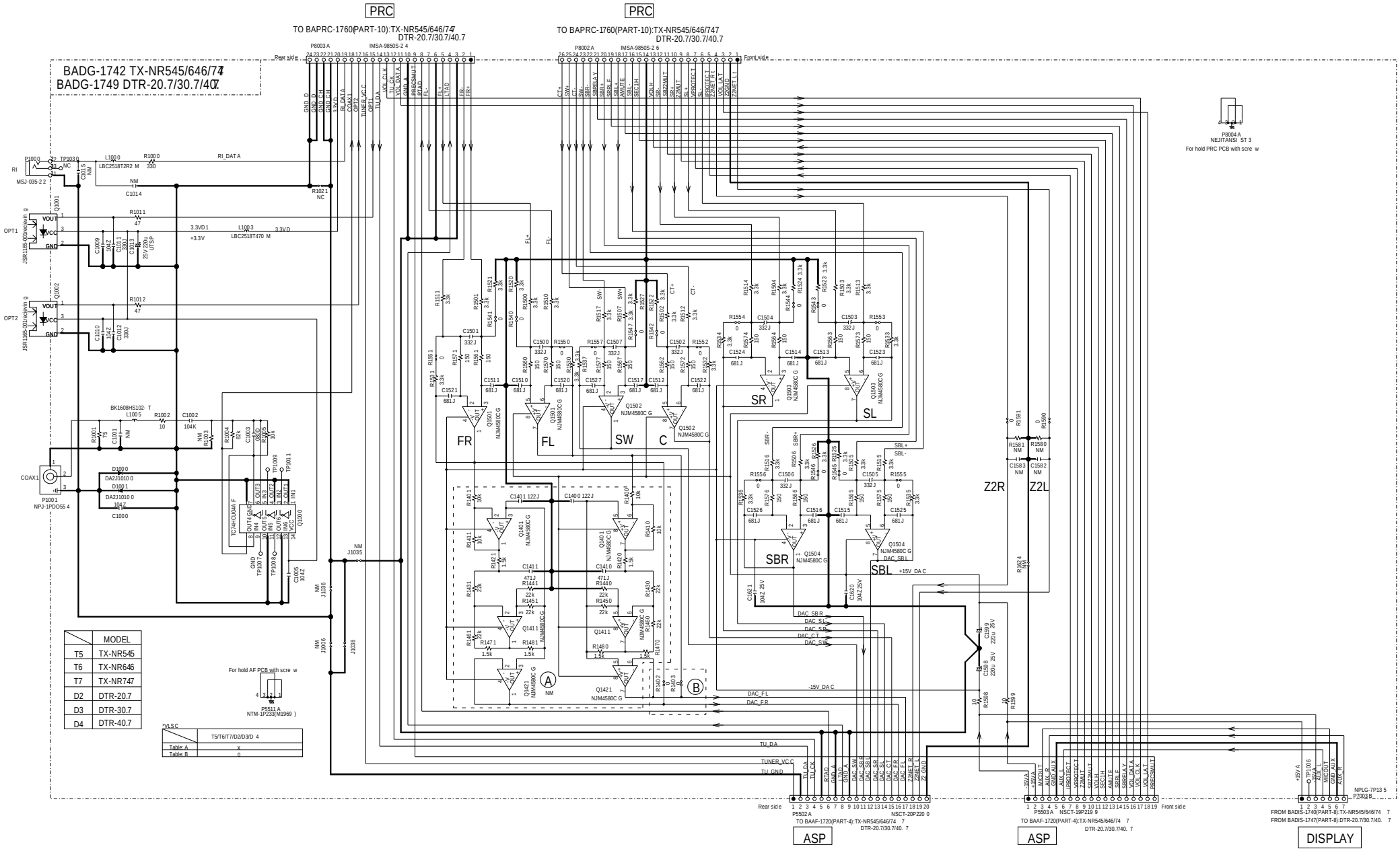

	MODEL
T5	TX-NR545
T6	TX-NR646
T7	TX-NR747
D2	DTR-20.7
D3	DTR-30.7
D4	DTR-40.7

*VLSC

	T5/T6/T7/D2/D3/D 4
Table: A	X
Table: B	0

MODEL NO.TX-NR545/646/747,DTR-20.7/30.7/40.7 SCHEMATIC DIAGRAM (PART-10) MPU SECTION

BAPRC-1760 (1/8)

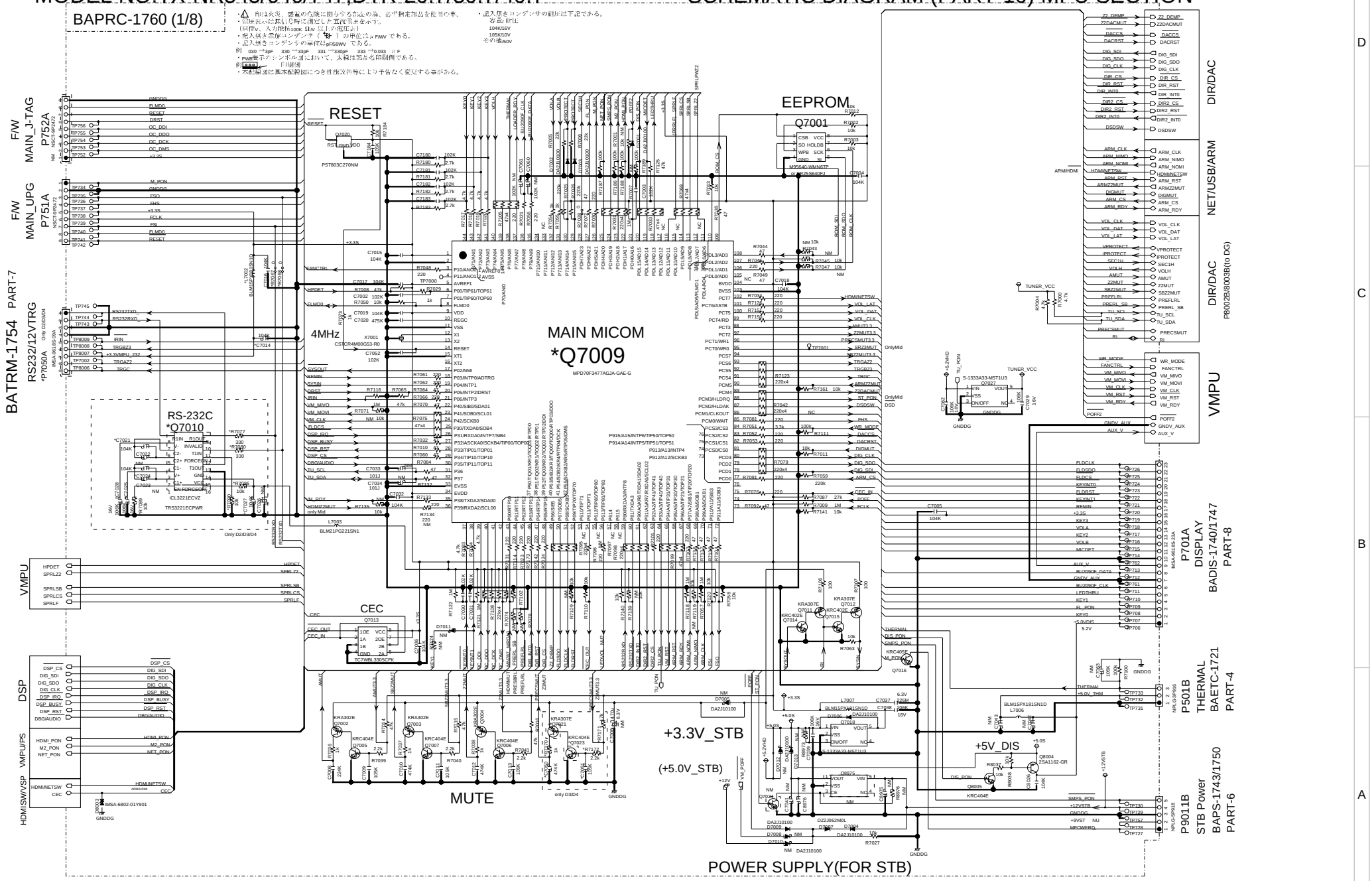

VMPU/ Power supply section

Schematic Diagram

MODEL NO.TX-NR545/646/747,DTR-20.7/30.7/40.7

SCHEMATIC DIAGRAM (PART-10) VMPU/POWER SUPPLY SECTION

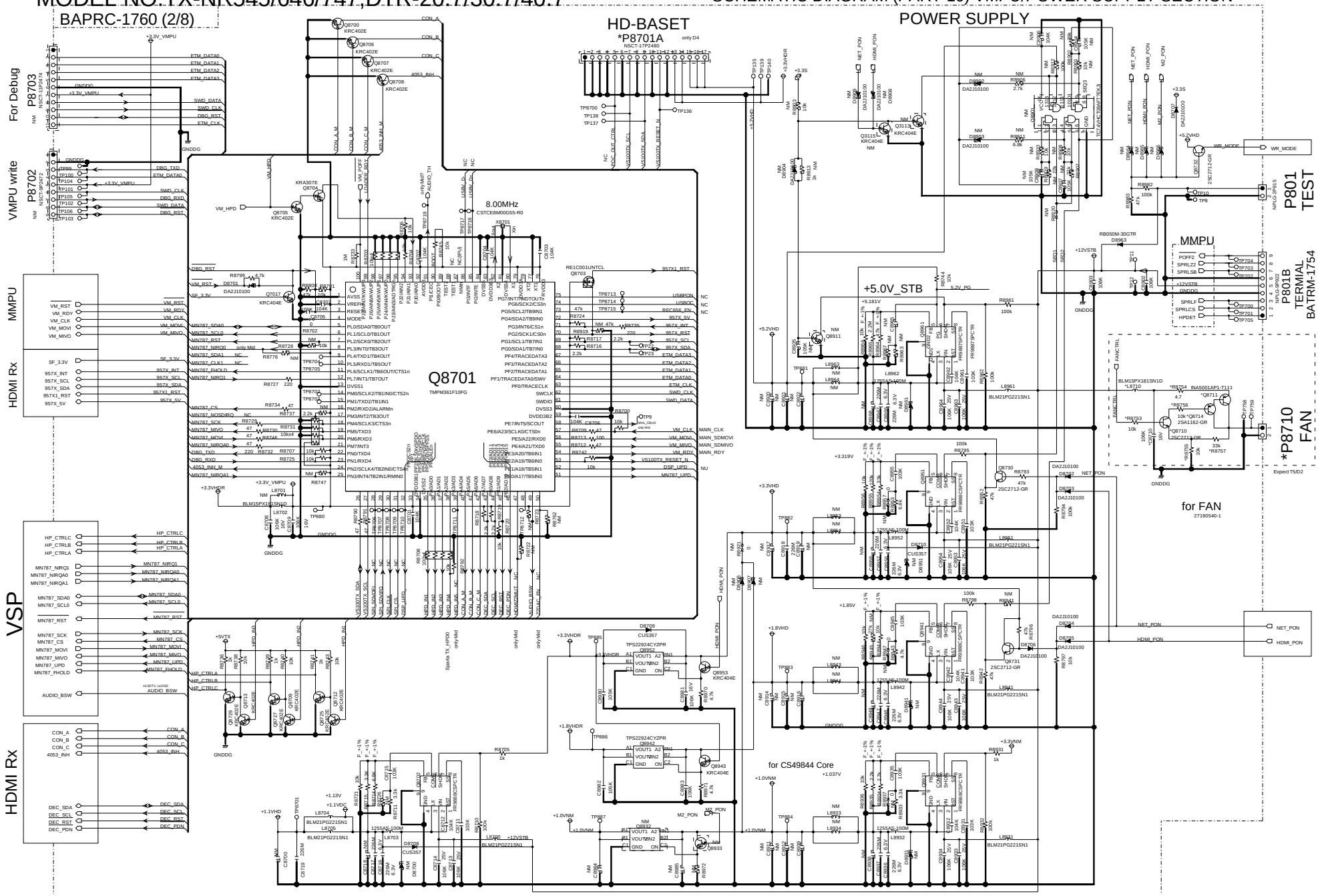

HDMI/Decoder section

Schematic Diagram

MODEL NO.TX-NR545/646/747,DTR-20.7/30.7/40.7

SCHEMATIC DIAGRAM (PART-10) HDMI/Decoder SECTION

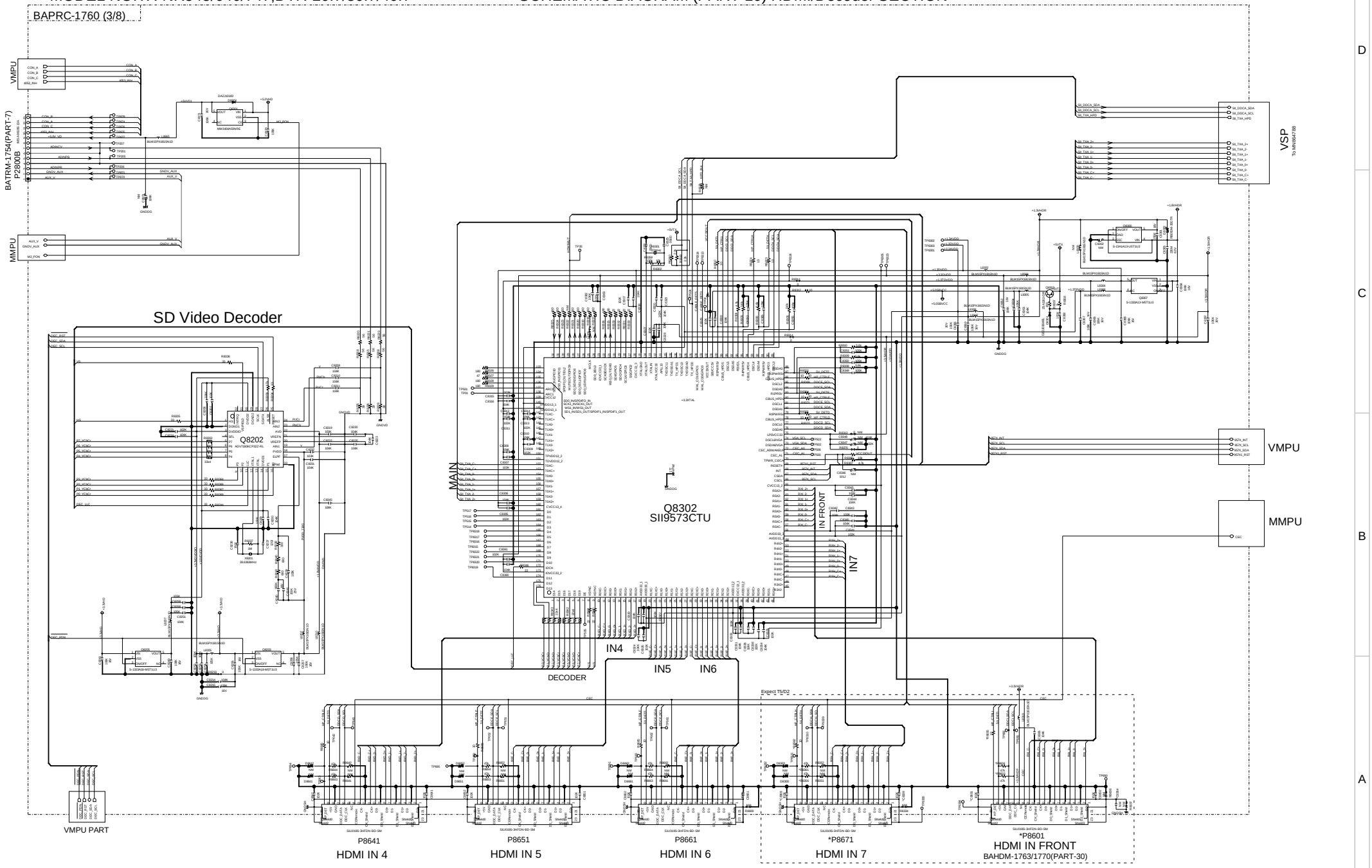

Video Processor section

Schematic Diagram

MODEL NO.TX-NR545/646/747,DTR-20.7/30.7/40.7

SCHEMATIC DIAGRAM (PART-10) VIDEO PROCESSOR SECTION

BAPRC-1760 (4/8)

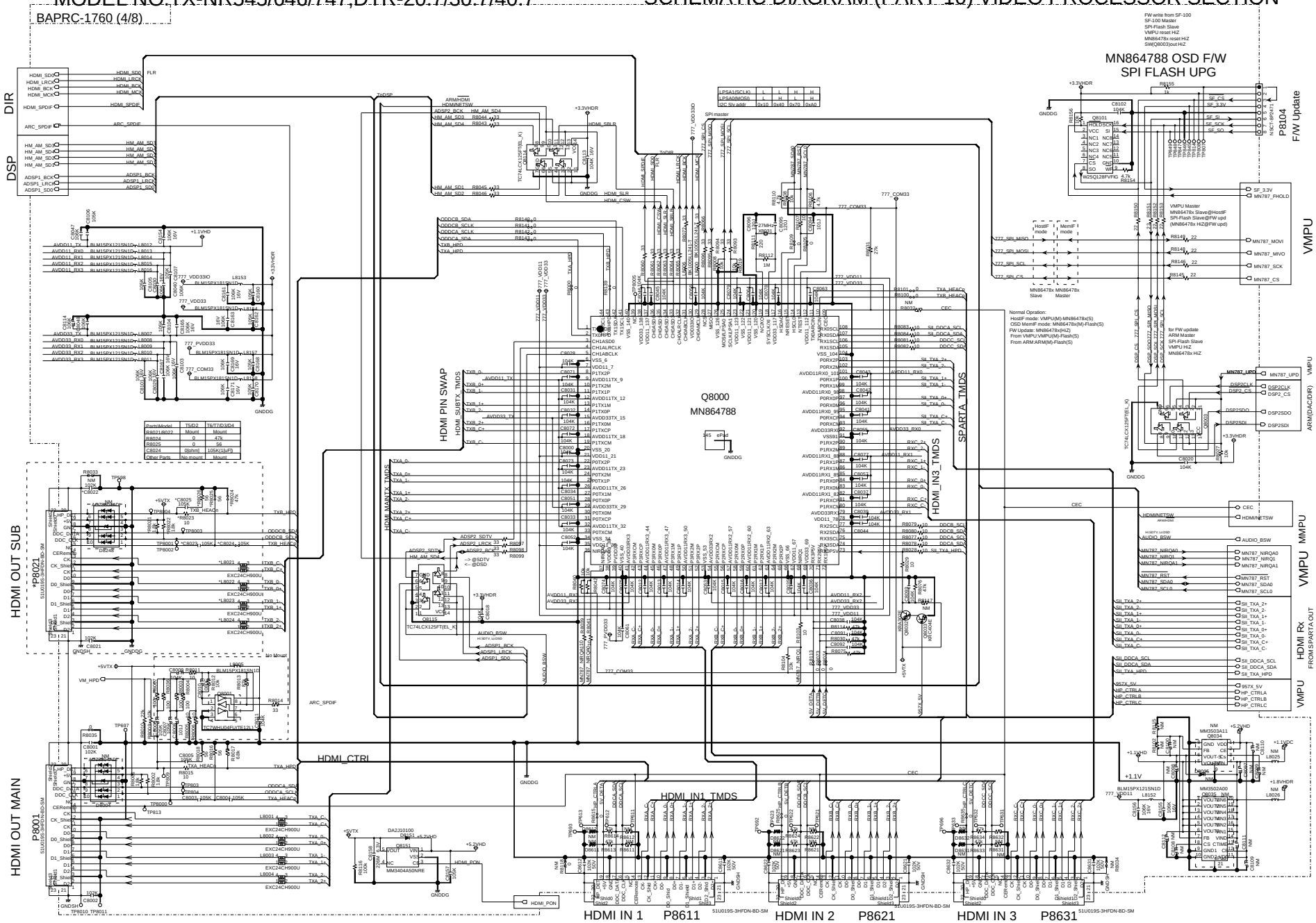

NET/USB Power section

Schematic Diagram

MODEL NO.TX-NR545/646/747,DTR-20.7/30.7/40.7 SCHEMATIC DIAGRAM (PART-10) NET/USB POWER SECTION

BAPRC-1760 (5/8)

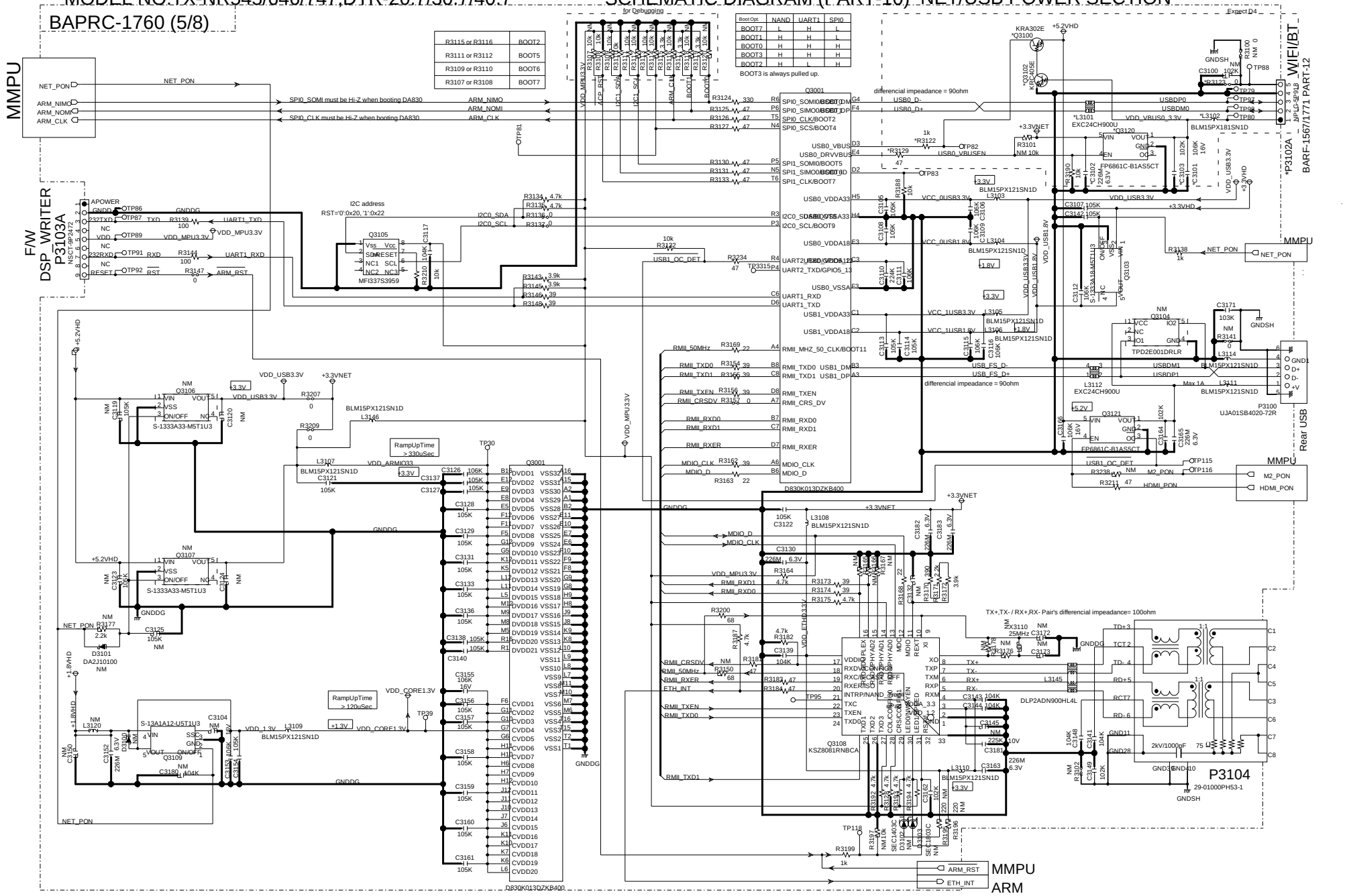

ARM/DIR/DAC section

Schematic Diagram

MODEL NO.TX-NR545/646/747/DTR-20.7/30.7/40.7

SCHEMATIC DIAGRAM (PART-10) ARM/DIR/DAC SECTION

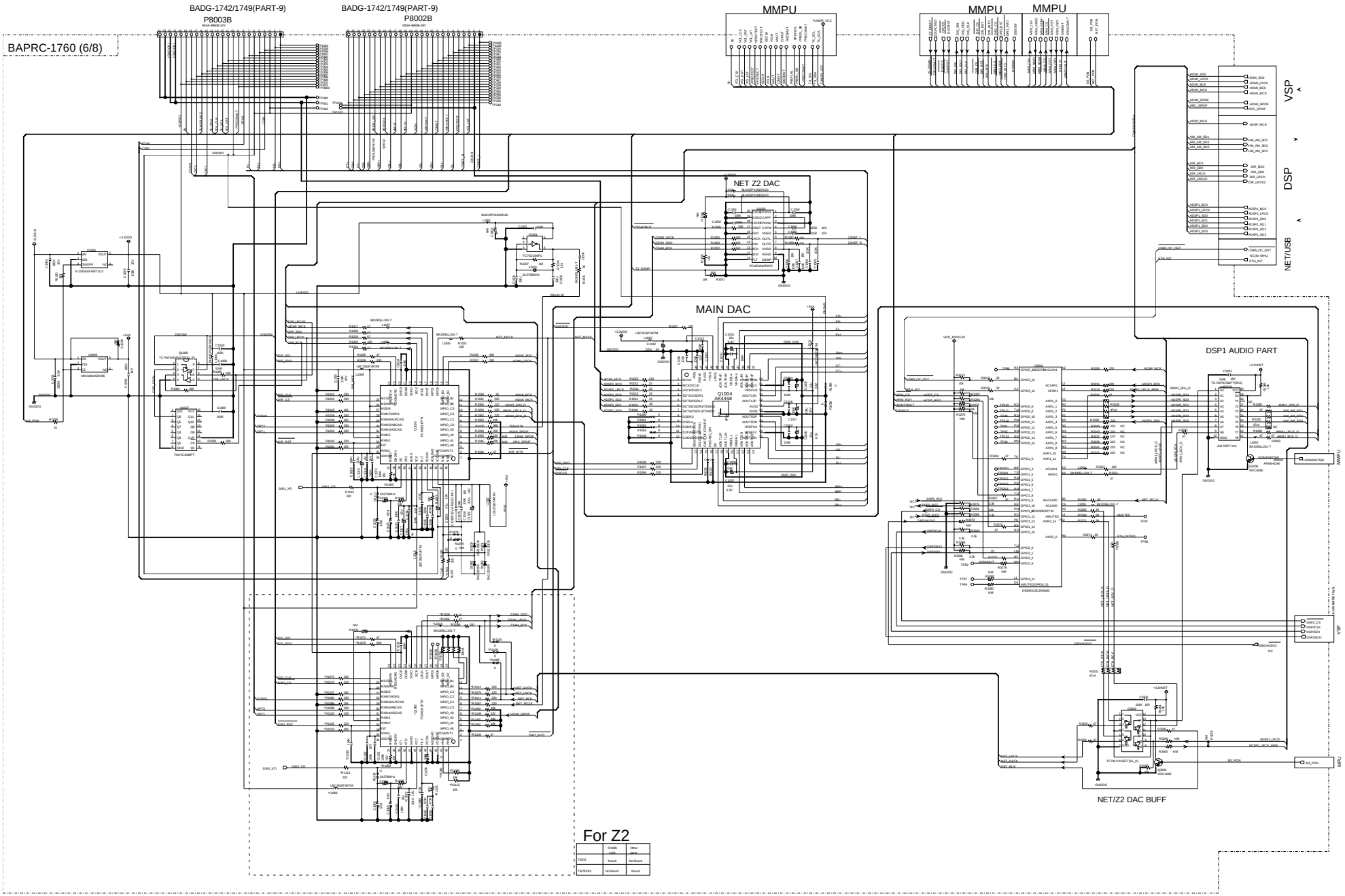

MODEL NO.TX-NR545/646/747,DTR-20.7/30.7/40.7 SCHEMATIC DIAGRAM (PART-10) ARM MEMORY SECTION

BAPRC-1760 (7/8)

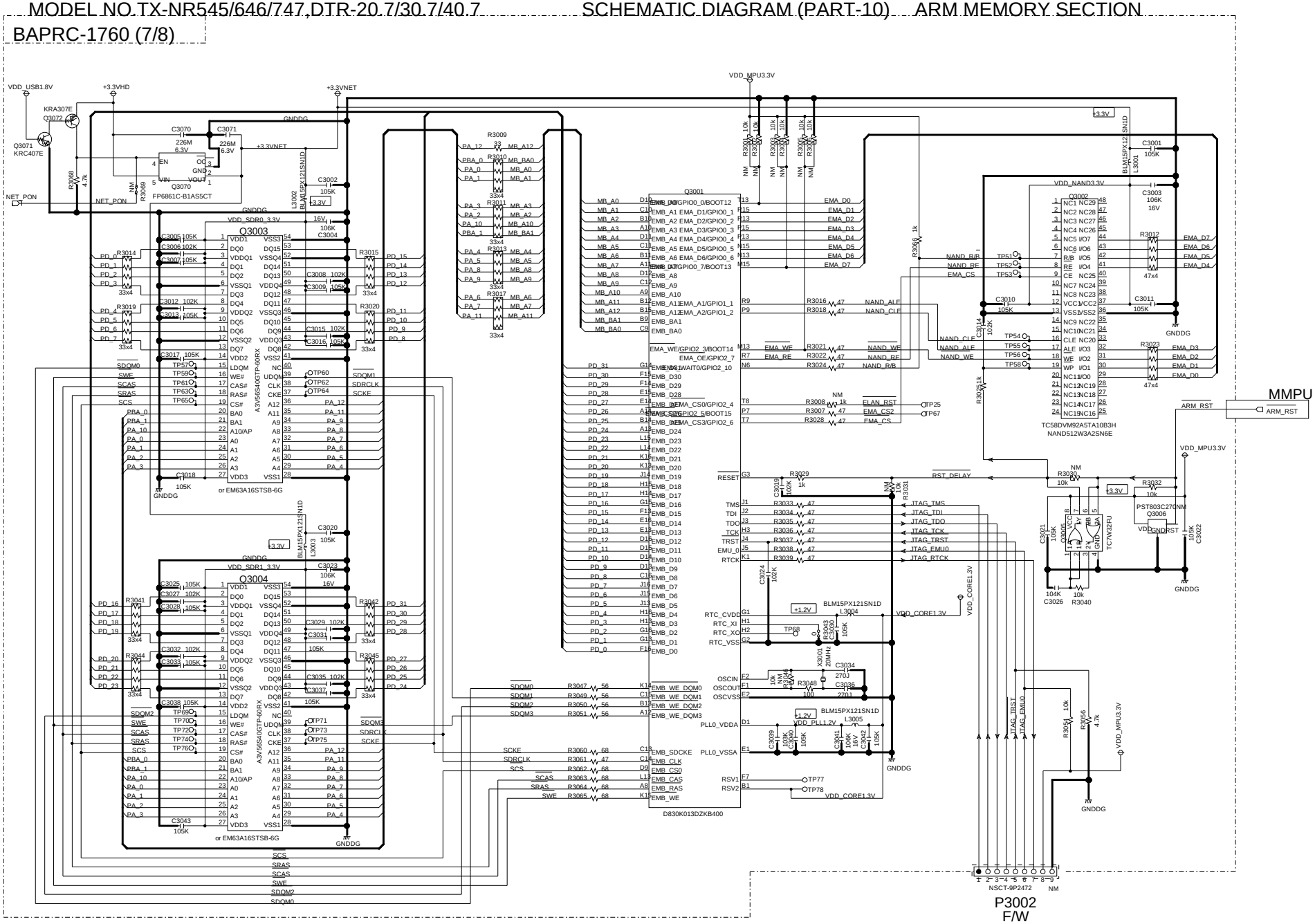

MODEL NO.TX-NR545/646/747,DTR-20.7/30.7/40.7 SCHEMATIC DIAGRAM (PART-10) DSP SECTION
BAPRC-1760 (8/8)

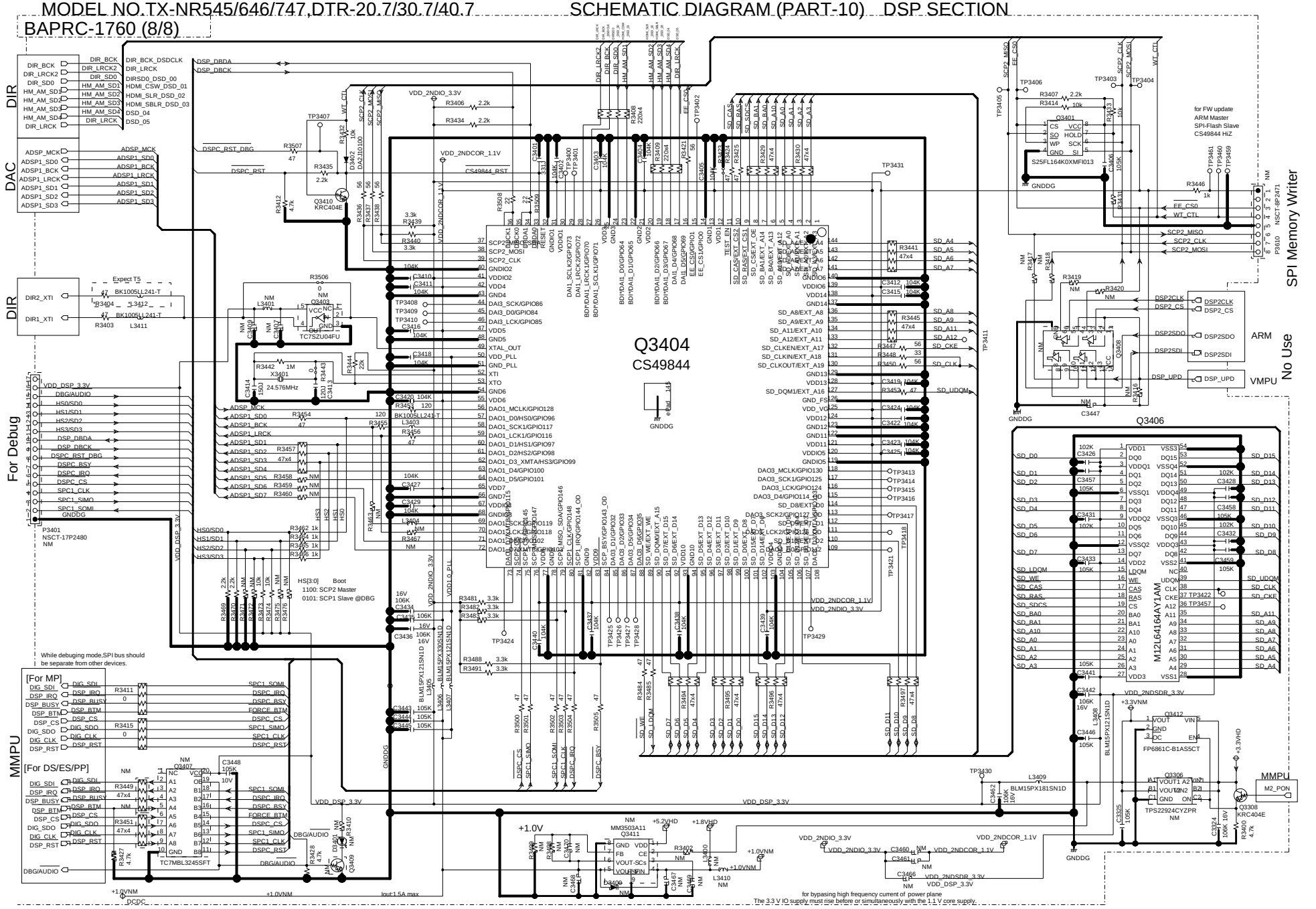

Schematic Diagram

MODEL NO. TX-SR343/444,HT-R494

SCHEMATIC DIAGRAM (PART-10) TUNER SECTION

MODEL NO. TX-NR545/646/747,DTR-20.7/30.7/40.7

SCHEMATIC DIAGRAM (PART-11) TUNER SECTION

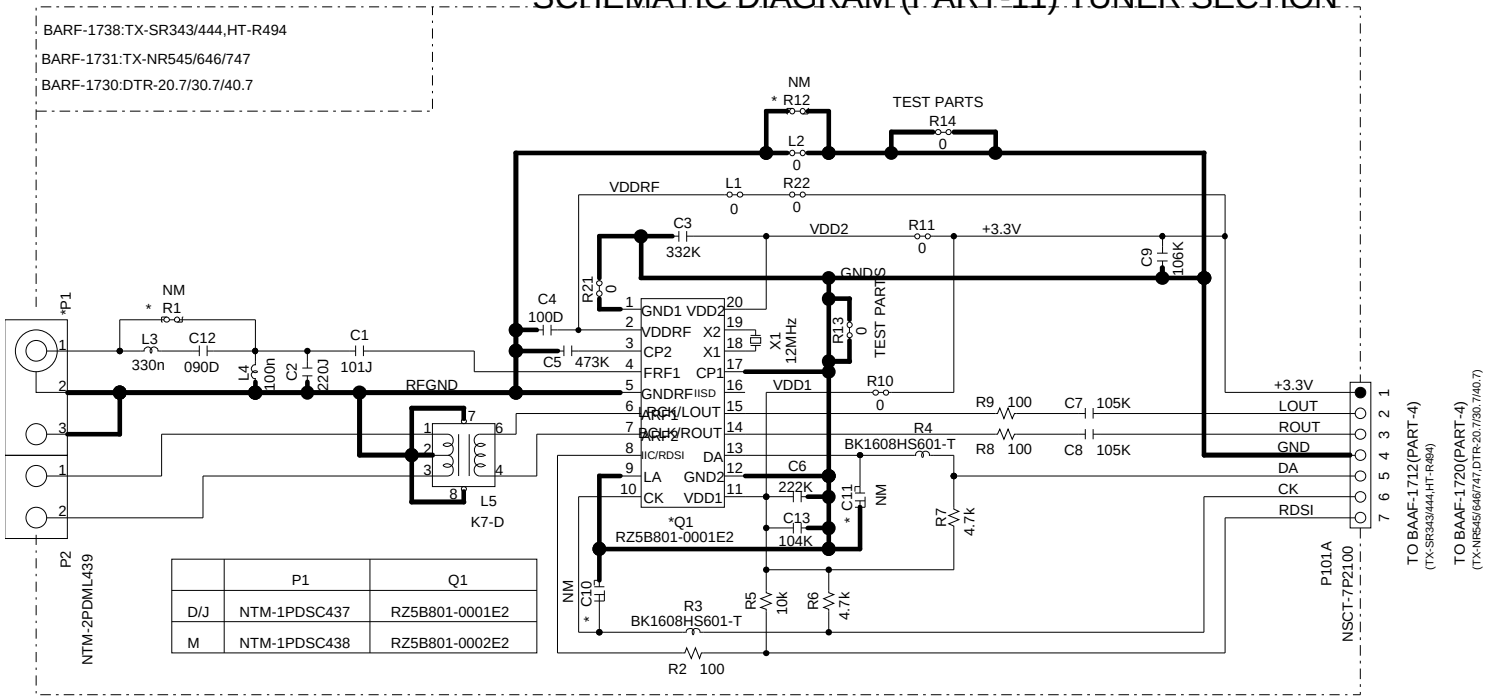

	P1	Q1
D/J	NTM-1PDSC437	RZ5B801-0001E2
M	NTM-1PDSC438	RZ5B801-0002E2

Wi-Fi/Bluetooth Connector section

Schematic Diagram

Model No. TX-NR545/646/747,DTR-20.7/30.7 SCHEMATIC DIAGRAM (PART-12) Wi-Fi/Bluetooth Connector Section

Model No. TX-RZ800/900 SCHEMATIC DIAGRAM (PART-**) Wi-Fi/Bluetooth Connector Section

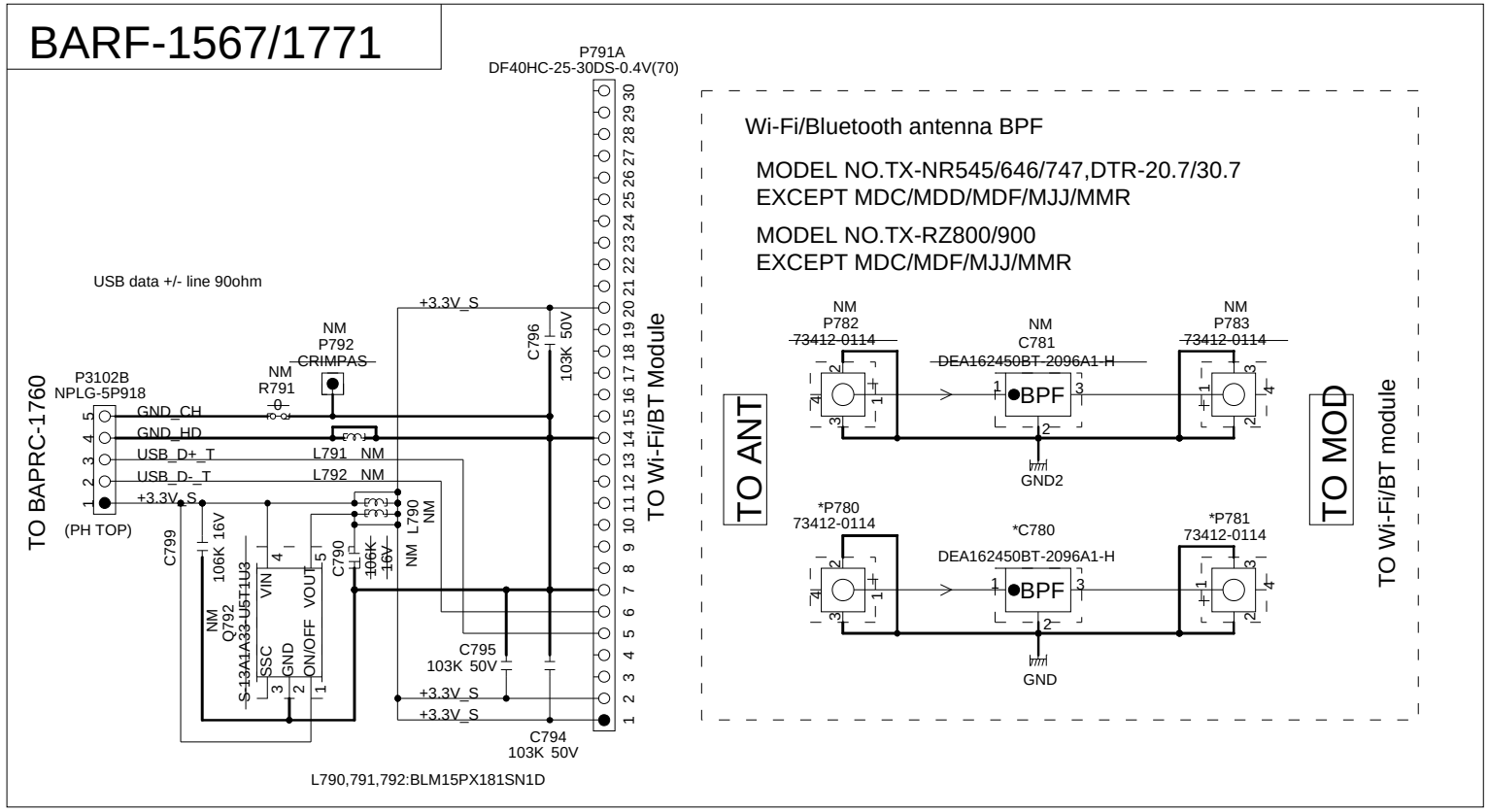

MODEL NO.TX-NR646/747,DTR-30.7/40.7

SCHEMATIC DIAGRAM (PART-13) FRONT HDMI SECTION

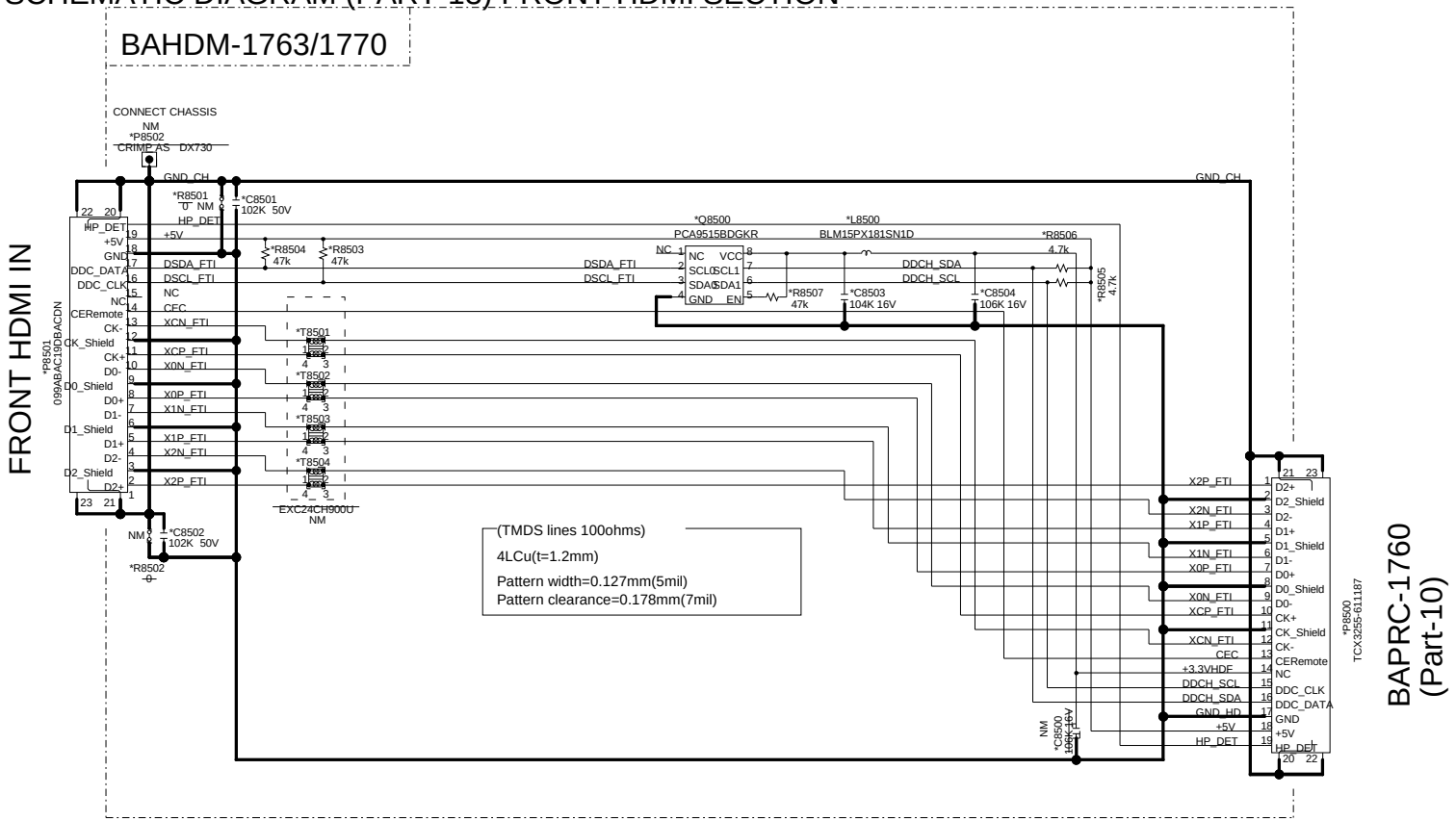

HDMI Base T section

Schematic Diagram

MODEL NO.DTR-40.7(PART-14) SCHEMATIC DIAGRAM HDBaseT SECTION

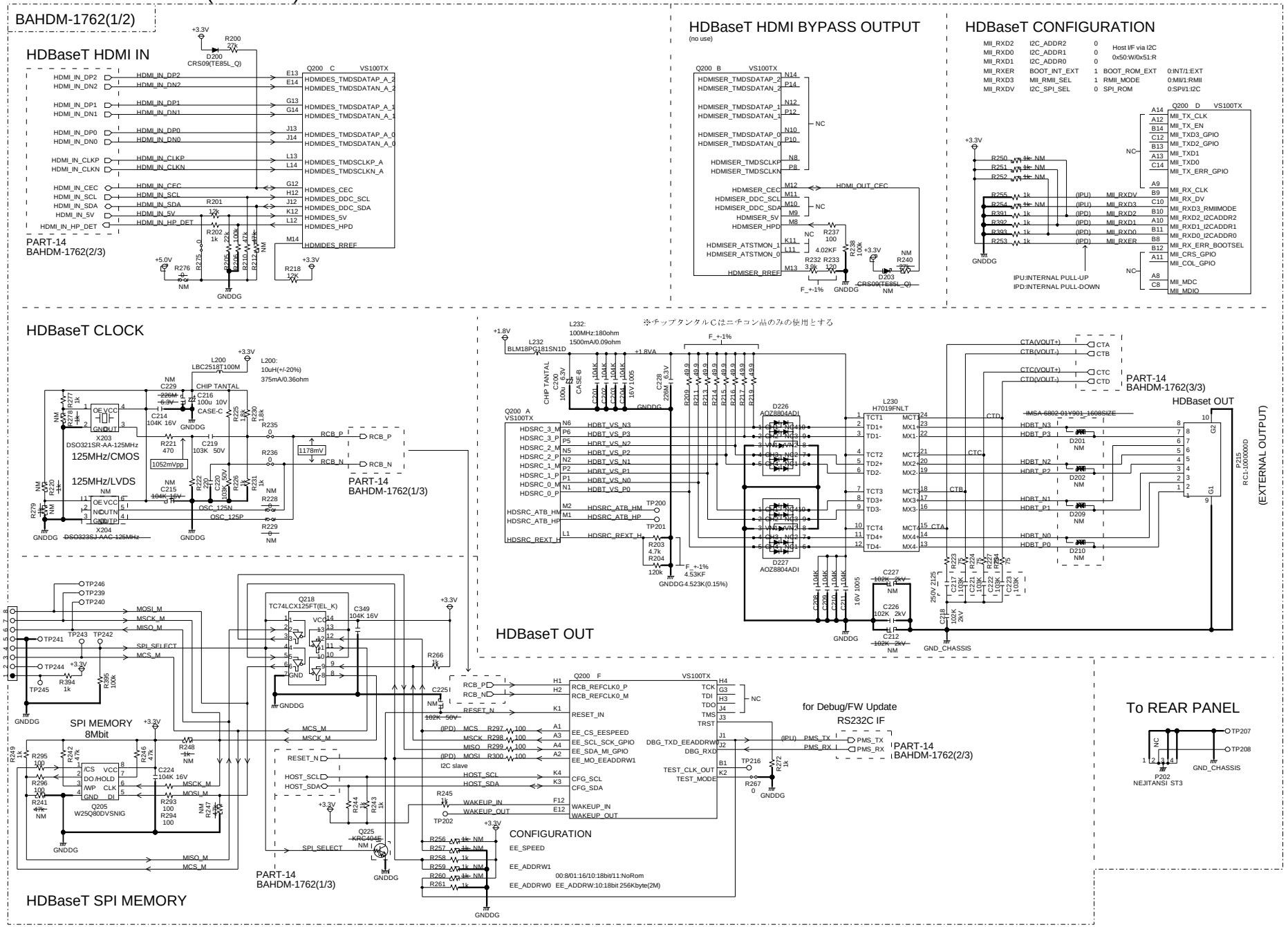

HDMI Base T section

Schematic Diagram

MODEL NO.DTR-40.7(PART-14) SCHEMATIC DIAGRAM HDBaseT SECTION

BAHDM-1762(2/2)

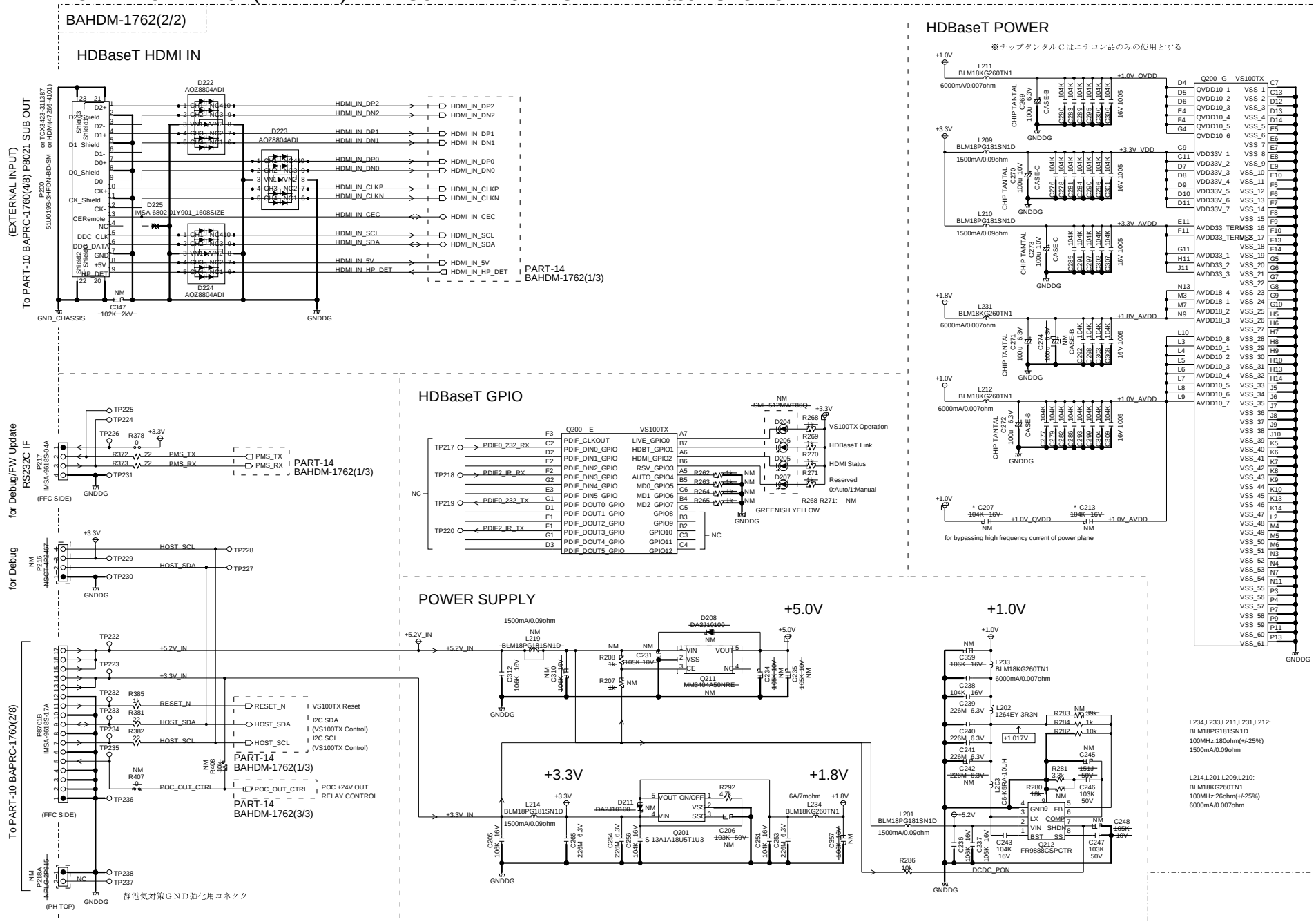

Overview

Exploded View

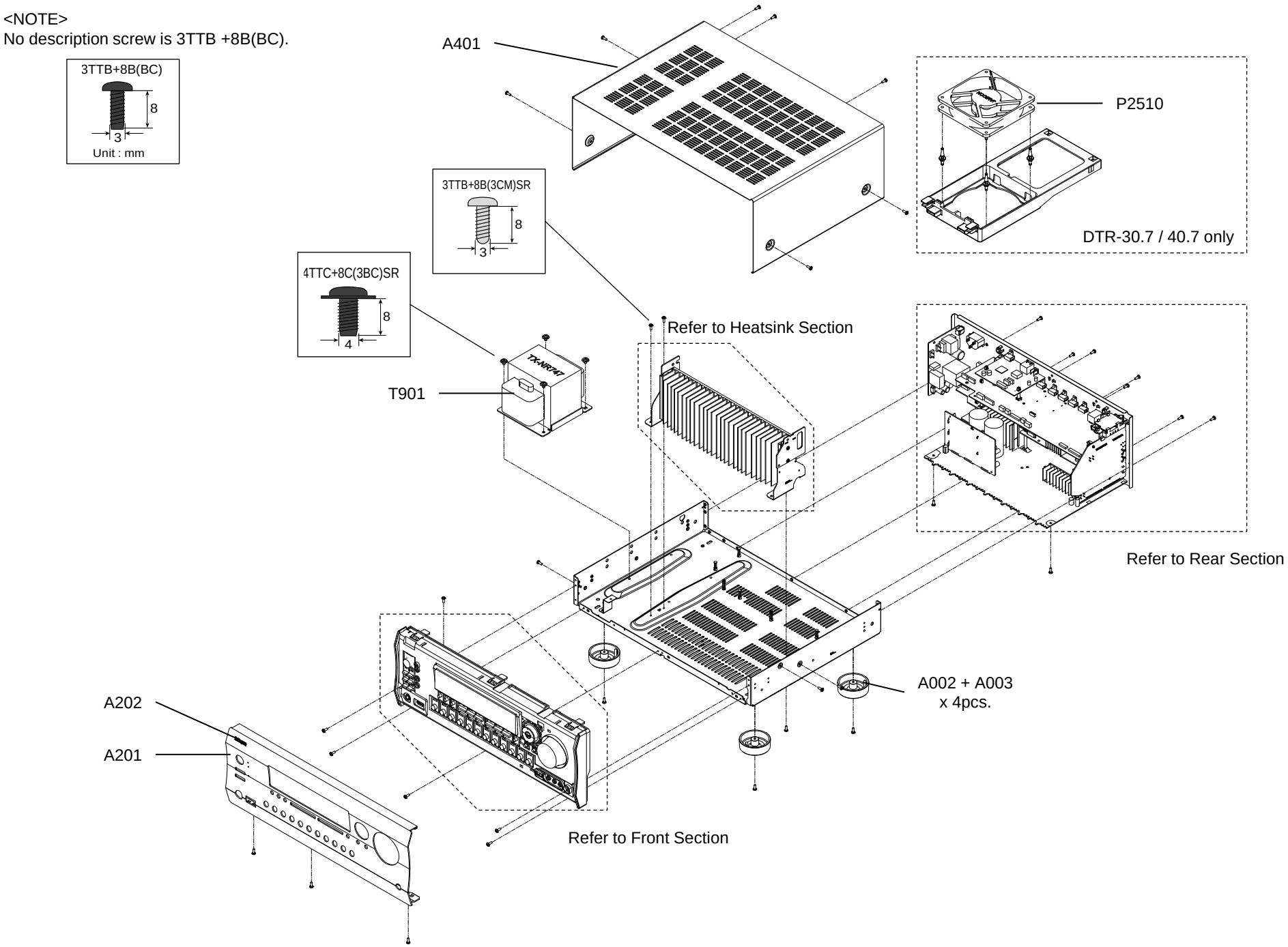

Front Section

Exploded View

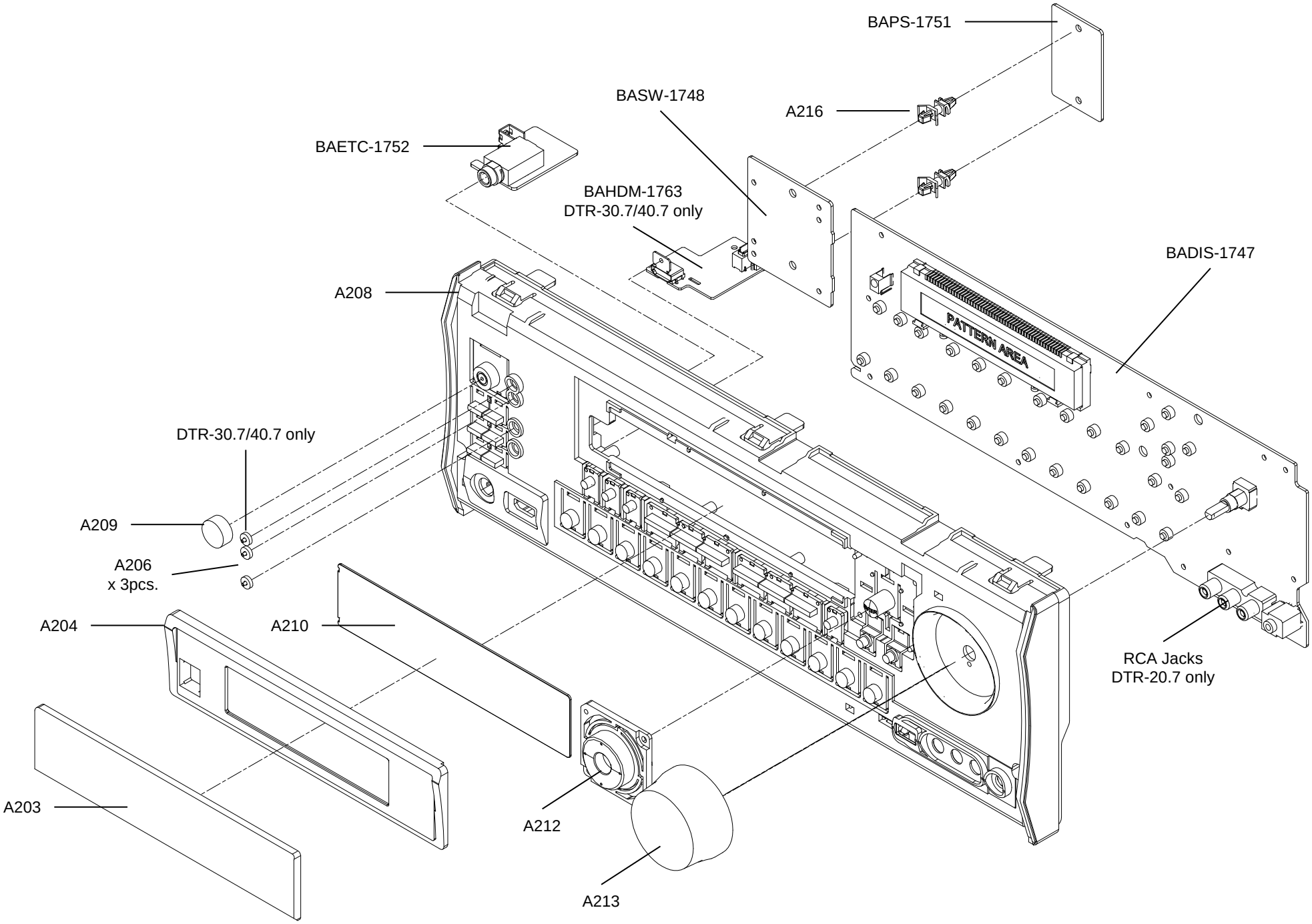

DTR-20.7/30.7/40.7

Rear Section

Exploded View

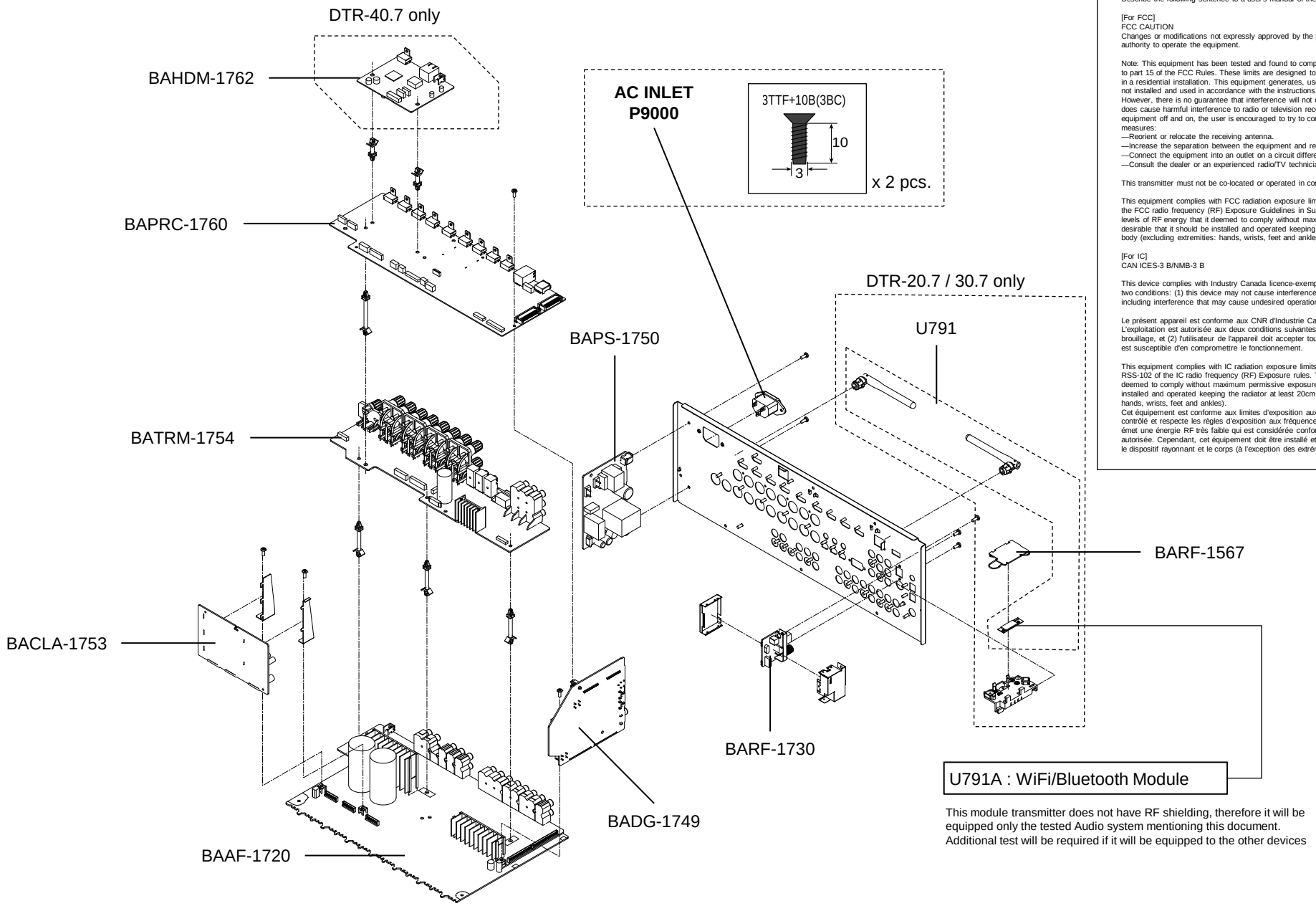

This module transmitter does not have RF shielding, therefore it will be equipped only the tested Audio system mentioning this document.
Additional test will be required if it will be equipped to the other devices

＊WiFi & Bluetooth Module has already been certificated by FCC and IC.

Information to the user.
Indicate "Contains FCC ID: TX2-RTL8723AS", "Contains IC: 6317A-RTL8723AS" and following information to the host device installed.

This device complies with part 15 of the FCC Rules. Operation is subject to the following two conditions: (1) This device may not cause harmful interference, and (2) this device must accept any interference received, including interference that may cause undesired operation.

Describe the following sentence to a user's manual of the host device.

[For FCC]
FCC CAUTION
Changes or modifications not expressly approved by the party responsible for compliance could void the user's authority to operate the equipment.

Note: This equipment has been tested and found to comply with the limits for a Class B digital device, pursuant to part 15 of the FCC Rules. These limits are designed to provide reasonable protection against harmful interference in a residential installation. This equipment generates, uses and can radiate radio frequency energy and, if not installed and used in accordance with the instructions, may cause harmful interference to radio communications. However, there is no guarantee that interference will not occur in a particular installation. If this equipment does cause harmful interference to radio or television reception, which can be determined by turning the equipment off and on, the user is encouraged to try to correct the interference by one or more of the following measures:
—Reorient or relocate the receiving antenna.
—Increase the separation between the equipment and receiver.
—Connect the equipment into an outlet on a circuit different from that to which the receiver is connected.
—Consult the dealer or an experienced radio/TV technician for help.

This transmitter must not be co-located or operated in conjunction with any other antenna or transmitter.

This equipment complies with FCC radiation exposure limits set forth for an uncontrolled environment and meets the FCC radio frequency (RF) Exposure Guidelines in Supplement C to OET65. This equipment has very low levels of RF energy that it deemed to comply without maximum permissive exposure evaluation (MPE). But it is desirable that it should be installed and operated keeping the radiator at least 20cm or more away from person's body (excluding extremities: hands, wrists, feet and ankles).

[For IC]
CAN ICES-3 B/NMB-3 B

This device complies with Industry Canada licence-exempt RSS standard(s). Operation is subject to the following two conditions: (1) this device may not cause interference, and (2) this device must accept any interference, including interference that may cause undesired operation of the device.

Le présent appareil est conforme aux CNR d'Industrie Canada applicables aux appareils radio exempts dlicence. L'exploitation est autorisée aux deux conditions suivantes : (1) l'appareil ne doit pas produire de brouillage, et (2) l'utilisateur de l'appareil doit accepter tout brouillage radioélectrique subi, même si le brouillage est susceptible d'en compromettre le fonctionnement.

This equipment complies with IC radiation exposure limits set forth for an uncontrolled environment and meets RSS-102 of the IC radio frequency (RF) Exposure rules. This equipment has very low levels of RF energy that it deemed to comply without maximum permissive exposure evaluation (MPE). But it is desirable that it should be installed and operated keeping the radiator at least 20cm or more away from person's body (excluding extremities: hands, wrists, feet and ankles).
Cet équipement est conforme aux limites d'exposition aux rayonnements énoncées pour un environnement non contrôlé et respecte les règles d'exposition aux fréquences radioélectriques (RF) CNR-102 de l'IC. Cet équipement émet une énergie RF très faible qui est considérée conforme sans évaluation de l'exposition maximale autorisée. Cependant, cet équipement doit être installé et utilisé en gardant une distance de 20 cm ou plus entre le dispositif rayonnant et le corps (à l'exception des extrémités : mains, poignets, pieds et chevilles).

Exploded View

Heatsink section

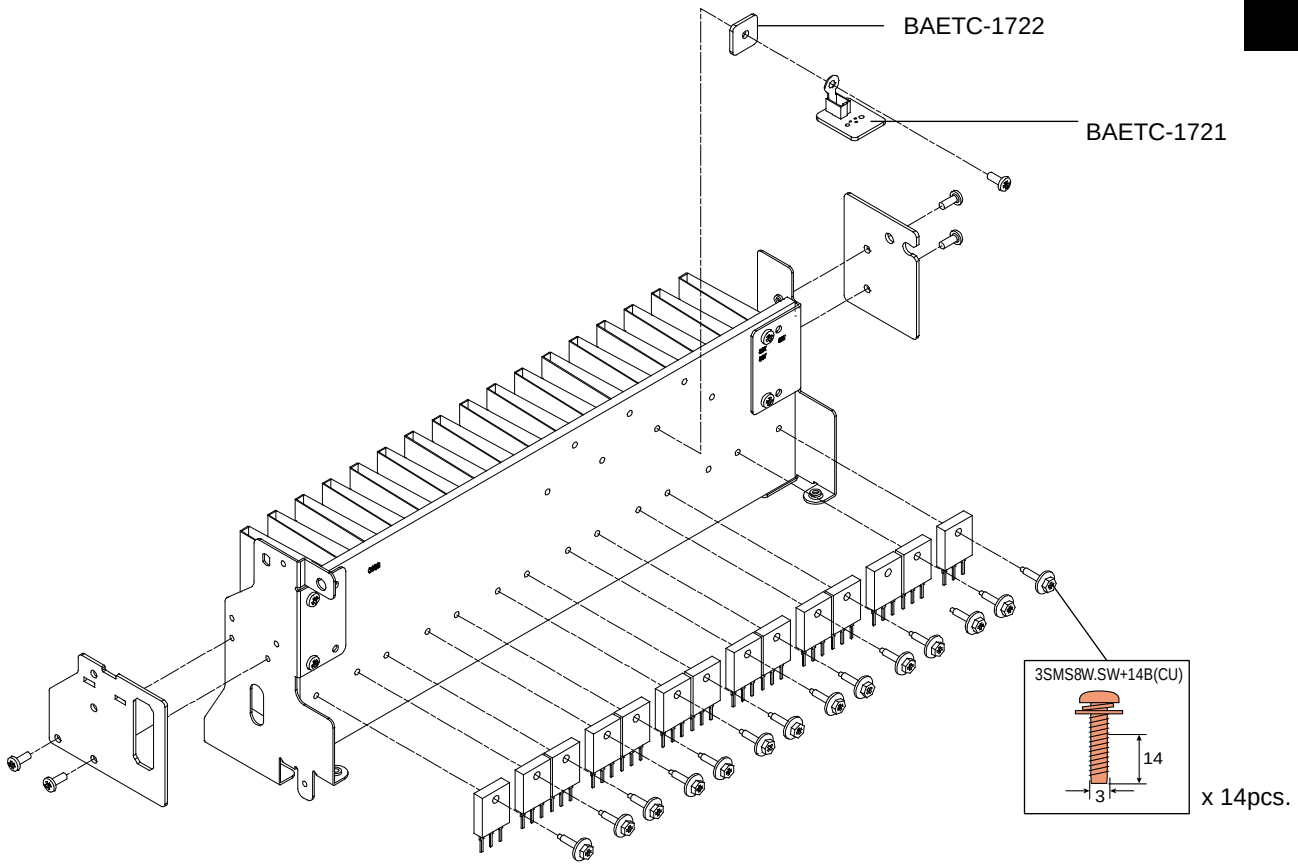

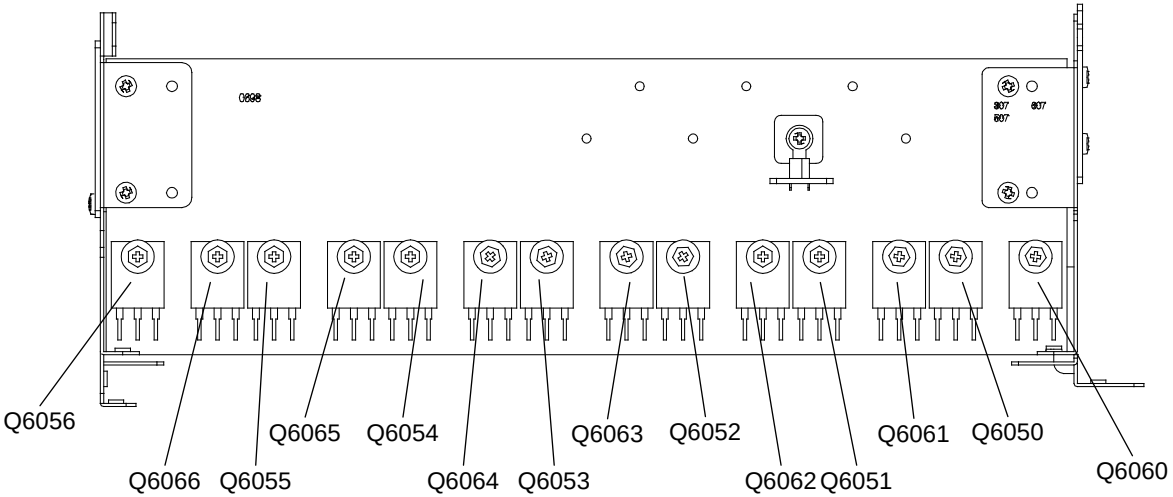

DTR-20.7/30.7/40.7

About Button Action

Use the following expression simplify description button operation.

Example-1 : [TV/CD] + [ON/STANDBY] → [BD/DVD]

Means press and hold [ON/STANDBY] while pressing [TV/CD] button, then press [BD/DVD] button.

Example-2 : [DISPLAY] + [ON/STANDBY] x 2 → [DIMMER] or [RT/PTY/TP]

Means press and hold [ON/STANDBY] button two times while pressing [DISPLAY] button, then press [DIMMER] or [RT/PTY/TP] button.

How to check MAIN Checksum

[DISPLAY] + [ON/STANDBY] x 2 → [MEMORY]

How to check FL Tube and LED Operation

[TV] + [ON/STANDBY] → [DIMMER] or [RT/PTY/TP]

How to check Output Sensor & Temperature Sensor

[DISPLAY+ [ON/STANDBY] x 2 → [TONE]

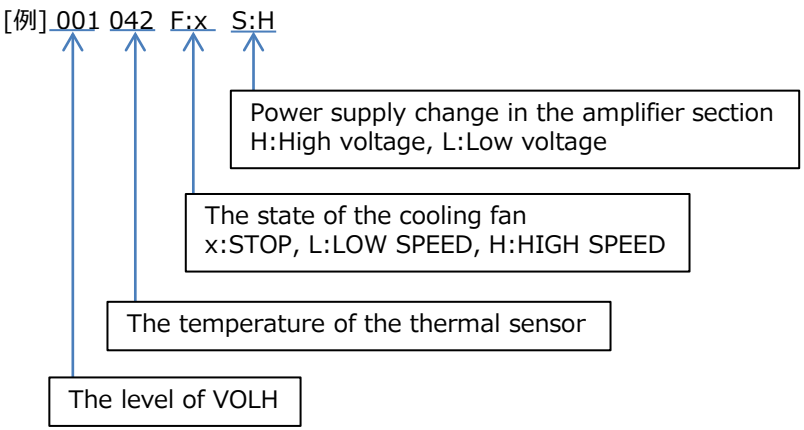

Initial Setting for Shipping (Service Information is also cleared.)

Step1

Set the volume level as 25. (TX-NR545/646/DTR-20.7/30.7)
Set the volume level as 30. (TX-NR747/DTR-40.7)

Step2

[TONE] + [ON/STANDBY] → [Return] x 2
Display "All Clear" of FL tube and AVR goes standby.

Step3

Unplug the power cord

How to enter test mode

Step1 : Set the volume level as 25. (TX-NR545/646/DTR-20.7/30.7)

Set the volume level as 30. (TX-NR747/DTR-40.7)

Step2 : [TV] + [ON/STANDBY]

Display “TEST-_”

Step3 : Press the following button, while "TEST - " is displayed, then each test mode is set.

1-00	2-00	3-00	4-00	5-00	6-00
BD/DVD	CBL/Sat	STRM BOX	PC	GAME	AUX

How to check buttons and Master Volume Operation

Step1

Set the following test mode and confirm each buttons and master volume operation.

Test mode (TEST 1-06)	[TV] + [ON/STANDBY] → [BD/DVD] → [TONE +] x 6

Step2

If "ON/STANDBY" button is pressed, AVR escapes from this button test mode.

Therefor, press the "ON/STANDBY" button, after checking other buttons finished.

How to check Output Sensor

Step1 : Low Detect check

When set the following test mode , if FL tube display "OK" then this check is passed.

Test mode (TEST 1-07)	[TV] + [ON/STANDBY] → [BD/DVD] → [TONE +] x 7
Relay	RL6430 and RL6440

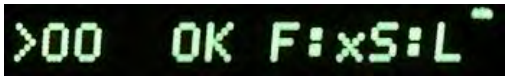

Step2 : High Detect check

When set the following test mode , if FL tube display "OK" then this check is passed.

Test mode (TEST 1-08)	[TV] + [ON/STANDBY] → [BD/DVD] → [TONE +] x 8
Relay	RL6430 and RL6440

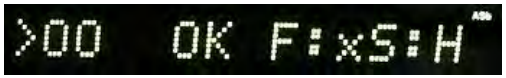

How to check FL Display

Step1 : Set VOL Level = 25

Step2 : [TV] + [ON/STANDBY] → [DIMMER] or [RT/PTY/TP]

Lit all Segment.

Step3 : [TONE +]

Lit '23456789ABCDEF'.

Step4 : [TONE +]

Lit a even number segment.

Step5 : [TONE +]

Lit an odd number segment.

Step6 : [TONE +]

The Destination setting is displayed.

Audio debug mode

The operations of DSP and DIR etc. are able to checked by the information displayed on FL in this debug mode. This information will help to analysing digital audio no sound trouble.

How to enter to a audio debug mode

Step1 : [DISPLAY] + [ON/STANDBY] x 2

Display “Mx.xx / xxxxxxxxx” --- Version number of MPU

Step2 : [DISPLAY]

Display “Nx.xx / xxxxxxxxx” --- Version number of N or DA830/NET

Step3 : [DISPLAY]

Display Audio debug information

Step4 : [TONE+] = forward, [TONE-] =reverse

FL Display

1	1	2	2	3	3	:	4	4	:	5	5		
				[TONE+] ↓			↑ [TONE-]						
6	6	6	:	7	:	8	8	8	:	9	:	10	
				[TONE+] ↓			↑ [TONE-]						
1	:	11	11	11	11	12	12	12	K	13	13	13	k
				[TONE+] ↓			↑ [TONE-]						
14	14	14	.	15	:	16	16	16	16	:	17	17	17
				[TONE+] ↓			↑ [TONE-]						
2	:	18	:	19	19	19	19	:	20	20	20	20	
				[TONE+] ↓			↑ [TONE-]						
	21	21	:	22	:	23	:	24	24	24		25	25
				[TONE+] ↓			↑ [TONE-]						
26	26	27	27	28	*	29	*	30	30	31	31	32	32
				[TONE+] ↓			↑ [TONE-]						
33	33	33	34	34	34	35	35	35	36	36	36		

Debug Mode

FL Display

1	1	2	2	3	3	:	4	4	:	5	5		

1. st_srd.lmd

01	C_LM_LAST
02	C_LM_PURE
03	C_LM_DIRECT
04	C_LM_STEREO
05	C_LM_MONO
20	C_LM_SURR
50	C_LM_THX_MUSIC
70	C_LM_THX_GAME
90	C_LM_THX_CINEMA
A0	C_LM_THX_U2GAME
A8	C_LM_THX_U2MUSIC
B0	C_LM_THX_U2CINEMA
D0	C_LM_AUDYSSEY
48	C_LM_DTSSS
06	C_LM_ORCHESTRA
07	C_LM_UNPLUGGED
08	C_LM_STUDIOMIX
09	C_LM_TVLOGIC
0A	C_LM_ALLCHST
0B	C_LM_FULLMONO
0C	C_LM_TD
F1	C_LM_TESTTONE
F2	C_LM_TESTTHR
F3	C_LM_TESTAUTO
F4	C_LM_ASC
F5	C_LM_FLASH
F6	C_LM_DEBUGMODE
F7	C_LM_FLASH2
F8	C_LM_FLASH3
F9	C_LM_FLASH4
FA	C_LM_FLASH_CHECK
0D	C_LM_RPG
0E	C_LM_ACTION
0F	C_LM_ROCKBAND
10	C_LM_SPORTS

2. st_srd.extdec

00	C_EXTDEC_OFF
01	C_EXTDEC_20_PLII
02	C_EXTDEC_20_PLIIX
03	C_EXTDEC_20_PLIIZ
04	C_EXTDEC_20_NEO6
05	C_EXTDEC_51_MTR
06	C_EXTDEC_51_DSC
07	C_EXTDEC_51_NEO6
08	C_EXTDEC_51_EX
09	C_EXTDEC_51_PLIIX
0A	C_EXTDEC_51_PLIIZ
0B	C_EXTDEC_9624
0C	C_EXTDEC_9624_MTR
0E	C_EXTDEC_71MULTI
0F	C_EXTDEC_20_NEURAL
10	C_EXTDEC_51_NEURAL
13	C_EXTDEC_DOLBY_20_SURR
14	C_EXTDEC_DOLBY_51_SURR

3. st_srd.extdecmd

00	C_EXTDECMD_OFF
01	C_EXTDECMD_10
02	C_EXTDECMD_20
03	C_EXTDECMD_MOVIE
04	C_EXTDECMD_MUSIC
05	C_EXTDECMD_GAME
06	C_EXTDECMD_HEIGHT
07	C_EXTDECMD_WIDE

4. Muting port

D	DIGMUTE port
A	AMUTE port

5. Factor of muting

bit_1	SELMUTE
bit_2	POWMUTE
bit_3	PROTECTMUTE
bit_4	AUDIOOUTMUTE
bit_5	AUDIOMUTE
bit_6	DIRMUTE
bit_7	DACMUTE
bit_8	HDMIMUTE

FL Display

6	6	6	:	7	:	8	8	8	:	9	:	10	

6. Audio input channel

ANA	Analog
COX	Coaxial
OPT	Optical
HDM	HDMI
ARC	ARC

7. DSP decode

0	DSP Detect OK
x	DSP No Detect

8. HDMI audio lock

STB	SOUND STATE FIX
TRS	SOUND STATE UNFIX
NON	SOUND STATE NONE

9. Display inhibit frag

S	display inhibit SET
C	display inhibit CLR

10. RX mute

V	HDMI MUTE

Debug Mode

FL Display

1	:	11	11	11	11	12	12	12	k	13	13	13	k

11. source_format	
UNLK	DDR_UNLOCK
ANA	DDR_ANALOG
PCM	DDR_PCM
AC3	DDR_AC3
DTS	DDR_DTS
MPEG	DDR_MPEG
DATA	DDR_DATA
UNKW	DDR_UNKNOWN
NORD	DDR_NOT_READY
NPCM	DDR_NOT_PCM
FS96	DDR_FS96
NODT	DDR_NOT_DETECT
DTSC	DDR_DTSCD
AAC	DDR_AAC
MPCM	DDR_MCHPCM
MCH	DDR_MCH
TRUE	DDR_TRUE
MSTR	DDR_MSTR
DSD	DDR_DSD
PLUS	DDR_DDPLUS
EXPR	DDR_DTSEXP
DTSH	DDR_DTSHD

12. st_srd.fs	
???	unknown
008	8kHz
011	11kHz
012	12kHz
016	16kHz
022	22kHz
024	24kHz
032	32kHz
044	44.1kHz
048	48kHz
064	64Hz
088	88.2kHz
096	96kHz
176	176.4kHz
192	192kHz

13. st_hd_display.fs	
???	unknown
008	8kHz
011	11kHz
012	12kHz
016	16kHz
022	22kHz
024	24kHz
032	32kHz
044	44.1kHz
048	48kHz
064	64Hz
088	88.2kHz
096	96kHz
176	176.4kHz
192	192kHz

FL Display

14	14	14	.	15	:	16	16	16	16	:	17	17	17

14. Information of the input channels for listening mode transition	
???	C_FMT_UNKNOWN
10	C_FMT_10
20	C_FMT_20
30	C_FMT_30
21	C_FMT_21
31	C_FMT_31
22	C_FMT_22
32	C_FMT_32
23	C_FMT_23
33	C_FMT_33
24	C_FMT_24
34	C_FMT_34
4H2	C_FMT_42H
5H2	C_FMT_52H
4W2	C_FMT_42W
5W2	C_FMT_52W
4H4	C_FMT_44H
4H3	C_FMT_43H
5H4	C_FMT_54H
5H3	C_FMT_53H
4W4	C_FMT_44W
4W3	C_FMT_43W
5W4	C_FMT_54W
5W3	C_FMT_53W
11	C_FMT_11

15. Information of the LFE channel input	
0	SW 0ch
1	SW 1ch
2	SW 2ch

16. Channel information of the FL display

Four digit string “10.2”, “5.”, “+1”

17. Number of channels after decoding	
???	C_FMT_UNKNOWN
10	C_FMT_10
20	C_FMT_20
30	C_FMT_30
21	C_FMT_21
31	C_FMT_31
22	C_FMT_22
32	C_FMT_32
23	C_FMT_23
33	C_FMT_33
24	C_FMT_24
34	C_FMT_34
4H2	C_FMT_42H
5H2	C_FMT_52H
4W2	C_FMT_42W
5W2	C_FMT_52W
4H4	C_FMT_44H
4H3	C_FMT_43H
5H4	C_FMT_54H
5H3	C_FMT_53H
4W4	C_FMT_44W
4W3	C_FMT_43W
5W4	C_FMT_54W
5W3	C_FMT_53W
11	C_FMT_11

FL Display

2	:	18	:	19	19	19	19	:	20	20	20	20	

18. Audio output OK/NG

O	decode OK
X	decode NG

19. Details of input format

ANA	C_SRC_ANA
PCM	C_SRC_PCM
DLB	C_SRC_DD
DEX	C_SRC_DD_EX
DTS	C_SRC_DTS
MTR	C_SRC_DTS_MTR
DSC	C_SRC_DTS_DSC
D96	C_SRC_DTS_96
96M	C_SRC_DTS_96M
AAC	C_SRC_AAC
MCH	C_SRC_MCH
DSP	C_SRC_DSP
MPCM	C_SRC_MCHPCM
DSD	C_SRC_DSD
TRUE	C_SRC_TRUE
TREX	C_SRC_TRUE_EX
MSTR	C_SRC_MSTR
PLUS	C_SRC_DDPLUS
PLEX	C_SRC_DDPLUS_EX
EXP	C_SRC_DTSEXP
DTSH	C_SRC_DTSHD
DSUR	C_SRC_DD_SUR
DPSR	C_SRC_DDPLUS_SUR
TRSR	C_SRC_TRUE_SUR

20. Details of the format for the FL display

ANA	C_SRC_ANA
PCM	C_SRC_PCM
DLB	C_SRC_DD
DEX	C_SRC_DD_EX
DTS	C_SRC_DTS
MTR	C_SRC_DTS_MTR
DSC	C_SRC_DTS_DSC
D96	C_SRC_DTS_96
96M	C_SRC_DTS_96M
AAC	C_SRC_AAC
MCH	C_SRC_MCH
DSP	C_SRC_DSP
MPCM	C_SRC_MCHPCM
DSD	C_SRC_DSD
TRUE	C_SRC_TRUE
TREX	C_SRC_TRUE_EX
MSTR	C_SRC_MSTR
PLUS	C_SRC_DDPLUS
PLEX	C_SRC_DDPLUS_EX
EXP	C_SRC_DTSEXP
DTSH	C_SRC_DTSHD
DSUR	C_SRC_DD_SUR
DPSR	C_SRC_DDPLUS_SUR
TRSR	C_SRC_TRUE_SUR

FL Display

	21	21	:	22	:	23	:	24	24	24		25	25

21. Dialog norm

Dialog norm value from 0 to 31

22. Return value of DIRINIT request dir (DDC_STATUS)

O	LOCK
X	UNLOCK

23. Return value of DIR busy or free Request_dir (DDC_BUSY)

F	Free
B	Busy

24. emphasis of information

ON	ON
OFF	OFF

25. HDDVD/BLUE(only DDPLUS)

BD	Blu-ray
HD	HDDVD

Debug Mode

FL Display

26	26	27	27	28	*	29	*	30	30	31	31	32	32

26. Audio IF DA830 input

IH	AUD_IF_I2S_H
DS	AUD_IF_DSD
IS	AUD_IF_I2S
NT	AUD_IF_NET
SP	AUD_IF_SPDIF
AD	AUD_IF_ADC
HR	AUD_IF_DDDTSHR

27. Information of DIR Burst Preamble

DS	DTSHD HR
DP	DD PLUS
Preamble Val	0x??

28. DIR Free or Busy

F	Free
B	Busy

29. DIR Detect Fs

00	CLOCK_FREQ_UNKNOWN
01	CLOCK_FREQ_8K
02	CLOCK_FREQ_11K
03	CLOCK_FREQ_12K
04	CLOCK_FREQ_16K
05	CLOCK_FREQ_22K
06	CLOCK_FREQ_24K
07	CLOCK_FREQ_32K
08	CLOCK_FREQ_44K
09	CLOCK_FREQ_48K
0A	CLOCK_FREQ_64K
0B	CLOCK_FREQ_88K
0C	CLOCK_FREQ_96K
0D	CLOCK_FREQ_128K
0E	CLOCK_FREQ_176K
0F	CLOCK_FREQ_192K

30. DIR sequence number

00	SEQ_DIG_POWEROFF
10	SEQ_DIG_RESET
11	SEQ_DIG_POWERON_WAIT
12	SEQ_DIG_RESTART
13	SEQ_DIG_WAIT_HDMI_FREE
20	SEQ_DIG_INPSEL_SET
30	SEQ_DIG_ANALOG_SET
31	SEQ_DIG_DIGITAL_SET
32	SEQ_DIG_MCHPCM_SET
33	SEQ_DIG_MCHANA_SET
34	SEQ_DIG_DDPDTSHD_SET
35	SEQ_DIG_NET_SET
40	SEQ_DIG_INIT_ERROR
41	SEQ_DIG_CHK_ERROR1
42	SEQ_DIG_CHK_ERROR2
43	SEQ_DIG_CHK_FREE
50	SEQ_DIG_CHK_ANALOG
60	SEQ_DIG_LOCK_PLL
61	SEQ_DIG_LOCK_ANA
F0	SEQ_DIG_FREE
f1	SEQ_DIG_FREE_ANA

31. DIR switch sequence number

00	SEQ_SWITCH_POWEROFF
01	SEQ_SWITCH_RESET
02	SEQ_SWITCH_POWERON_WAIT
03	SEQ_SWITCH_CHANGE
04	SEQ_SWITCH_FREE

32. DAC sequence number

00	SEQ_DAC_POWEROFF
01	SEQ_DAC_RESET
02	SEQ_DAC_POWERON_WAIT
03	SEQ_DAC_INITIALIZE
04	SEQ_DAC_RESTART
05	SEQ_DAC_CMND_SET
06	SEQ_DAC_FREE_WAIT
07	SEQ_DAC_FREE

FL Display

33	33	33	34	34	34	35	35	35	36	36	36		

33. Information of the input FS of DA830

UNK	C_FS_UNKNOWN
8	C_FS_08
11	C_FS_11
12	C_FS_12
16	C_FS_16
22	C_FS_22
24	C_FS_24
32	C_FS_32
44	C_FS_44
48	C_FS_48
64	C_FS_64
88	C_FS_88
96	C_FS_96
176	C_FS_176
192	C_FS_192

34. Information of the output FS of DA830

UNK	C_FS_UNKNOWN
8	C_FS_08
11	C_FS_11
12	C_FS_12
16	C_FS_16
22	C_FS_22
24	C_FS_24
32	C_FS_32
44	C_FS_44
48	C_FS_48
64	C_FS_64
88	C_FS_88
96	C_FS_96
176	C_FS_176
192	C_FS_192

35. Information of the input MCLK of DA830

64	AUD_MCLK_64Fs
128	AUD_MCLK_128Fs
256	AUD_MCLK_256Fs
384	AUD_MCLK_384Fs
512	AUD_MCLK_512Fs
640	AUD_MCLK_640Fs
768	AUD_MCLK_768Fs

36. State of the audio input of DA830

NO	AUD_STS_SOUND_NO
TRS	AUD_STS_SOUND_TRANS
STB	AUD_STS_SOUND_STAB

HDMI resolution display

HDMI-related operations can be checked to some extent by displaying HDMI resolution display mode.

How to enter to this mode

Step1 : [ENTER] Hold down for 3 seconds

The display order

Display of the input signal

Step1 : Display of the input signal (for 5 seconds)

↓

Step2 : Display of the output signal (for 5 seconds)

Debug Mode

Display of the input signal

Digital

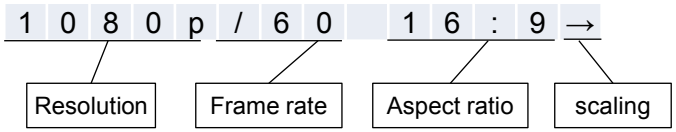

Analog

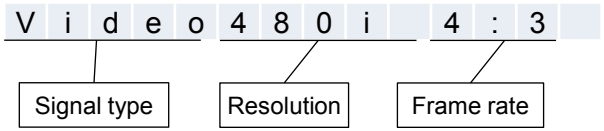

Input signal	Display	
・DVI		480I/60 16:9
		480P/60 4:3
・VGA(DVI)		*VGA/59 4:3
・Pixel Repetition	Pixel Rep. 2: D (Except 480i) Pixel Rep. 4: Q Pixel Rep. 8: O	D480p/60 16:9
・CVBS		Video480i 4:3
・Component		CMP 576i 16:9
・21:9 (Pixel AR ≠ 1:1)		1080p/60 21:9
・21:9 (Pixel AR ＝ 1:1)		1080w/60 21:9
・LTE TMDS Clock340MHz		1080p/60S 16:9
・No input		Unknown

Display of the output signal

Output resolution

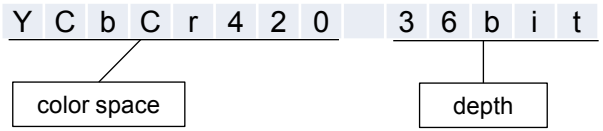

Output resolution (4k scaling)

4 K 6 0 p 4 2 0 3 0 b i t

Output resolution (dawn scaling)

1 0 8 0 p 4 2 2 2 4 b i t

Output resolution (IP converter)

4 8 0 p 4 4 4 2 4 b i t

Output signal	Display
・RSEN OFF	R G B 4 8 b *
・EDID_READ_NG	D V I 2 4 b #
・Resolution Error	Y C b C r 4 4 4 4 8 b E
・DVIの場合	D V I 2 4 b i t
・No output	– – – – –
・4096 x 2160p	4 K 6 0 p R G B # 2 4 b i t
・LTE340MHz	R G B 2 4 b S
・Signal generate	4 8 0 p R G B G e n
・Cannot detect the hot-plug	O F F

About Cooling Fan

Cooling Fan

E.g. (TX-NR646)

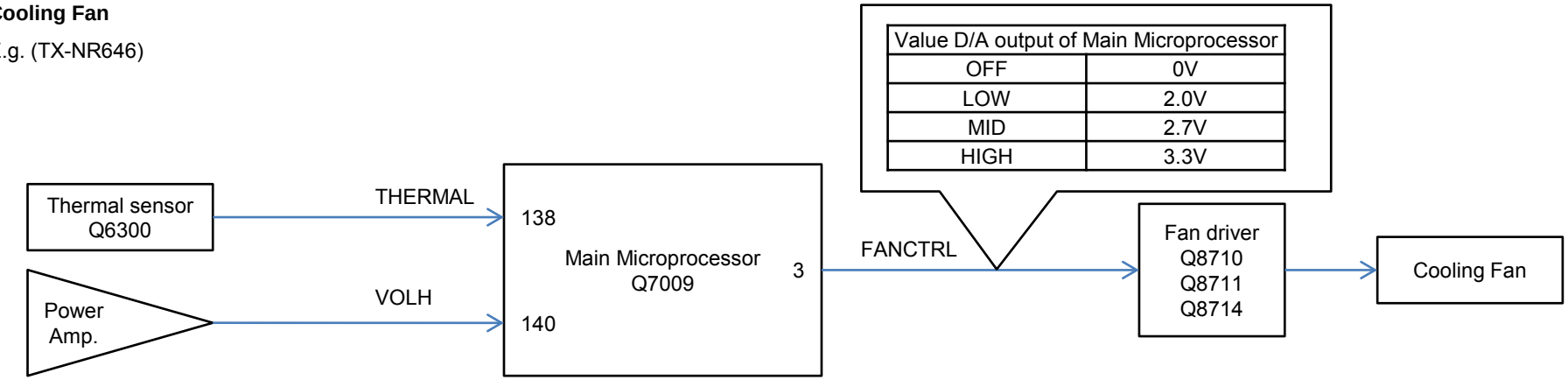

Condition to operate

		VOLH			
		OFF or Headphone	LOW	MID	HIGH
THERMAL	OFF	STOP	STOP	STOP	STOP
	LOW	LOW	LOW	LOW	LOW
	MID	LOW	MID	MID	MID
	HIGH	HIGH	HIGH	HIGH	HIGH

THERMAL (Temperature of thermal sensor)

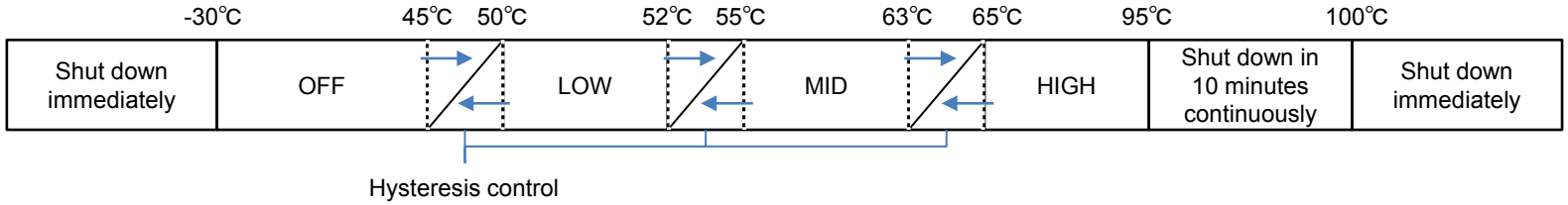

VOLH (Voltage of VOLH port)

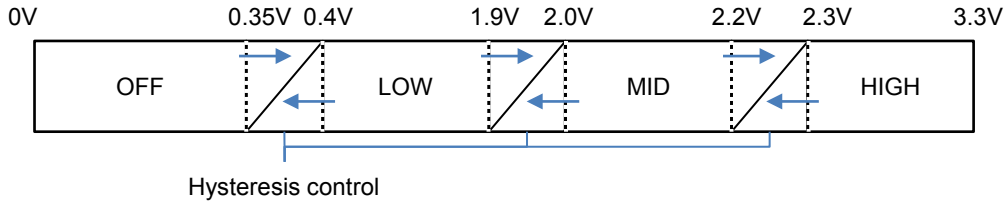

Service Information Mode

Displaying Service information

This service information display system is helpful in analyze the status when the unit goes into Protect mode and is powered off. Pay attention that the status will change if a button is pushed.

How to enter to service information mode.

Step1 : Set the volume level as 25. (TX-NR545/646/DTR-20.7/30.7)

Set the volume level as 30. (TX-NR747/DTR-40.7)

Step2 : [DISPLAY] + [ON/STANDBY] x 2

M1.xx / xxxxxALA — The version of main microprocessor. (displayed only for 3 seconds)

Step3 : [HOME]

- 8 0 F 2 7 D D

- Power off Cause
  T : Thermal Protect
  V : Voltage Protect
  I : Current Protect
  - : Other
- Temperature : xx F or xx C
- Volume Level
- Listening Mode Please see the “Listening Mode code list” on the right.

Step4 : [HOME]

01: 23 10h — Information Displayed (Record this Information)

- 01: 23 — Time after Power on xx : xx
- 10h — Time after Power on xx : xx

To exit the service information mode.

[ON/STANDBY]

Normal display

[RETURN] (to initialize the data in the service information.)

Protect Data CLR

↓

Normal display

Listening Mode Code List

01	C_LM_LAST
02	C_LM_PURE
03	C_LM_DIRECT
04	C_LM_STEREO
05	C_LM_MONO
20	C_LM_SURR
50	C_LM_THX_MUSIC
70	C_LM_THX_GAME
90	C_LM_THX_CINEMA
A0	C_LM_THX_U2GAME
A8	C_LM_THX_U2MUSIC
B0	C_LM_THX_U2CINEMA
D0	C_LM_AUDYSSEY
48	C_LM_DTSSS
06	C_LM_ORCHESTRA
07	C_LM_UNPLUGGED
08	C_LM_STUDIOMIX
09	C_LM_TVLOGIC
0A	C_LM_ALLCHST
0B	C_LM_FULLMONO
0C	C_LM_TD
F1	C_LM_TESTTONE
F2	C_LM_TESTTHR
F3	C_LM_TESTAUTO
F4	C_LM_ASC
F5	C_LM_FLASH
F6	C_LM_DEBUGMODE
F7	C_LM_FLASH2
F8	C_LM_FLASH3
F9	C_LM_FLASH4
FA	C_LM_FLASH_CHECK
0D	C_LM_RPG
0E	C_LM_ACTION
0F	C_LM_ROCKBAND
10	C_LM_SPORTS

DTR-30.7(B)MDD

<Note>
Parts marked by "NSP" are generally unavailable because they are not in our Master Spare Parts List.

NOTE : THE COMPONENTS IDENTIFIED BY THE MARK ! ARE CRITICAL FOR RISK OF FIRE AND ELECTRIC SHOCK. REPLACE ONLY WITH PART NUMBER SPECIFIED.

<Notes>
(B) : Black color model
<MDD> : 120V
USA model

: NSP

DTR-30.7(B)MDD

EXPLODED VIEW PARTS LIST

REF. NO.	PART NAME	DESCRIPTION	Q'TY	PART NO. (SN)	REMARKS
[SEMI CONDUCTOR]					
Q6050	TRANSISTOR	2SC5242-O	1	2202843	
Q6051	TRANSISTOR	2SC5242-O	1	2202843	
Q6052	TRANSISTOR	2SC5242-O	1	2202843	
Q6052 or	TRANSISTOR	2SC3856-O	(1)	2201653	
Q6052 or	TRANSISTOR	2SC5242-R	(1)	2202842	
Q6053	TRANSISTOR	2SC5242-O	1	2202843	
Q6053 or	TRANSISTOR	2SC3856-O	(1)	2201653	
Q6053 or	TRANSISTOR	2SC5242-R	(1)	2202842	
Q6054	TRANSISTOR	2SC5242-O	1	2202843	
Q6054 or	TRANSISTOR	2SC3856-O	(1)	2201653	
Q6054 or	TRANSISTOR	2SC5242-R	(1)	2202842	
Q6055	TRANSISTOR	2SC5242-O	1	2202843	
Q6055 or	TRANSISTOR	2SC3856-O	(1)	2201653	
Q6055 or	TRANSISTOR	2SC5242-R	(1)	2202842	
Q6056	TRANSISTOR	2SC5242-O	1	2202843	
Q6056 or	TRANSISTOR	2SC3856-O	(1)	2201653	
Q6056 or	TRANSISTOR	2SC5242-R	(1)	2202842	
Q6060	TRANSISTOR	2SA1962-O	1	2202833	
Q6060 or	TRANSISTOR	2SA1492-O	(1)	2201663	
Q6060 or	TRANSISTOR	2SA1962-R	(1)	2202832	
Q6061	TRANSISTOR	2SA1962-O	1	2202833	
Q6061 or	TRANSISTOR	2SA1492-O	(1)	2201663	
Q6061 or	TRANSISTOR	2SA1962-R	(1)	2202832	
Q6062	TRANSISTOR	2SA1962-O	1	2202833	
Q6062 or	TRANSISTOR	2SA1492-O	(1)	2201663	
Q6062 or	TRANSISTOR	2SA1962-R	(1)	2202832	
Q6063	TRANSISTOR	2SA1962-O	1	2202833	
Q6063 or	TRANSISTOR	2SA1492-O	(1)	2201663	
Q6063 or	TRANSISTOR	2SA1962-R	(1)	2202832	
Q6064	TRANSISTOR	2SA1962-O	1	2202833	
Q6064 or	TRANSISTOR	2SA1492-O	(1)	2201663	
Q6064 or	TRANSISTOR	2SA1962-R	(1)	2202832	
Q6065	TRANSISTOR	2SA1962-O	1	2202833	
Q6065 or	TRANSISTOR	2SA1492-O	(1)	2201663	
Q6065 or	TRANSISTOR	2SA1962-R	(1)	2202832	
Q6066	TRANSISTOR	2SA1962-O	1	2202833	
Q6066 or	TRANSISTOR	2SA1492-O	(1)	2201663	
Q6066 or	TRANSISTOR	2SA1962-R	(1)	2202832	
[CHASSIS SCREW]					
A002	LEG	(B)	4	27175464	
A003	CUSHION	(ZUL)	4	28141877	
A025A	LABEL	(E-CON)	{ 1}	29364978	
A035	LABEL	(PT)INTEGRA	1	29392595	
A101	REAR PANEL	DTR30.7MDD	1	27124661A	N
A105	LABEL	(SP 7ch+Z2)MONO	1	29392788	
[CABINET]					
A201	FRONT PANEL	DTR30.7DC	1	27213779A	N
A202	BADGE		1	28135278	
A203	CLEAR PLATE		1	28192231	
A204	DECORATIVE FRAME	DTR	1	28159051A	
A206	FACET		3	28198905	
A208	FRONT BRACKET	(B)402	1	27111576F	
A209	KNOB	(STANDBY)	1	28325756A	

A210	BACK PLATE		1	28133430	
A212	KNOB	(CUR)B	1	28326682A	
A213	KNOB	(VOL)AS	1	28326685C	
A214	P RIVET	P-3055B-8L	2	880048	
A401	COVER	(B) (Bent)	1	28210034	
A401	COVER	(B) (Not Bent)	1	28210034Z	
A403	LABEL	(CAUTION)	1	29392531	
[TRANS COIL]					
T901	POWER TRANSFORMER	NPT-1651D	1	2302119	**N, !**
[SW TRM]					
F6401	FUSE	12A-TUL-250V	1	252301GR	**!**
F6402	FUSE	12A-TUL-250V	1	252301GR	**!**
F9002	FUSE	10A-UL/T-233	1	252330GR	**!**
F9002 or	FUSE	10A-T/UL-ST2	(1)	252333GR	**!**
P101	FLEXIBLE FLAT CABLE	NCFC7-071012	1	2047071012	
P2510	FAN	KF1225B1E-33ACFG9RB	1	24502336	
P2800	FLEXIBLE FLAT CABLE	NCFC5-131012	1	2045131012	
P7001	FLEXIBLE FLAT CABLE	NCFC5-232212	1	2045232212	
P7050	FLEXIBLE FLAT CABLE	NCFC5-091512	1	2045091512	
P8651	CORD ASSEMBLY	HDMI 0.25M	1	2010515	
P9000	AC INLET	R301X2PSn	1	25053358	**!**
[TUNER UNIT]					
U001	**PARENT PC BOARD AS**	**BAAF-1720-1G * (Parent)**	**1**	**1B303520-1G**	**MDD**
BAAF-1720	ASP/ AMP PC BOARD AS	BAAF-1720-1G (Child)	1	1B3035720-1G	
BAETC-1721	THERMAL SENSOR PC BOARD AS	BAETC-1721-1G (Child)	1	1B3035721-1G	
BAETC-1722	SPASER(SENSOR) PC BOARD AS	BAETC-1722-1G (Child)	1	1B3035722-1G	
U002	**PARENT PC BOARD AS**	**BADIS-1747-1C * (Parent)**	**1**	**1B303547-1C**	**MDD**
BARF-1730	TUNER PC BOARD AS	BARF-1730-1C (Child)	1	1B3035730-1C	
BADIS-1747	DISPLAY PC BOARD AS	BADIS-1747-1C (Child)	1	1B3035747-1C	
BADIS-1747	DISPLAY PC BOARD AS	BADIS-1747-1C (Child)	1	1B3035747-1C	
BASW-1748	LED/ SWITCH PC BOARD AS	BASW-1748-1C (Child)	1	1B3035748-1C	
BADG-1749	DIGITAL IN/ LPF PC BOARD AS	BADG-1749-1C (Child)	1	1B3035749-1C	
BAPS-1750	POWER SUPPLY(PRI) PC BOARD AS	BAPS-1750-1C (Child)	1	1B3035750-1C	
BAPS-1751	POWER SUPPLY(FL) PC BOARD AS	BAPS-1751-1C (Child)	1	1B3035751-1C	
BAETC-1752	PHONE JACK PC BOARD AS	BAETC-1752-1C (Child)	1	1B3035752-1C	
BACLA-1753	VOLTAGE AMP PC BOARD AS	BACLA-1753-1C (Child)	1	1B3035753-1C	
U003	**PARENT PC BOARD AS**	**BATRM-1754-1G * (Parent)**	**1**	**1B303554-1G**	**MDD**
BATRM-1754	TERMINAL (VIDEO/ SPEAKER) PC BOARD AS	BATRM-1754-1G (Child)	1	1B3035754-1G	
BAETC-1755	HOLDER (部品なし) PC BOARD AS	BAETC-1755-1G (Child)	1	1B3035755-1G	
BAETC-1756	HOLDER (部品なし) PC BOARD AS	BAETC-1756-1G (Child)	1	1B3035756-1G	
BAETC-1757	HOLDER (部品なし) PC BOARD AS	BAETC-1757-1G (Child)	1	1B3035757-1G	
U004	**PARENT PC BOARD AS**	**BAPRC-1760-1K * (Parent)**	**1**	**1B303560-1K**	**MDD**
BAPRC-1760	PROCESSOR PC BOARD AS	BAPRC-1760-1K (Child)	1	1B3035760-1K	
U006	**PARENT PC BOARD AS**	**BAHDM-1770-1A * (Parent)**	**1**	**1B303570-1A**	**MDD**
BAHDM-1770	FRONT HDMI TERMINAL PC BOARD AS	BAHDM-1770-1A (Child)	1	1B3035770-1A	
BARF-1771	BLUETOOTH CONNECTOR PC BOARD AS	BARF-1771-1A (Child)	1	1B3035771-1A	
U002A	SHIELD CASE	(TUNER-TOP)	1	27225206A	
U002B	SHIELD CASE	(TUNER-BTM)	1	27225207A	
U791	WIFI BT COMB MODULE	WCBN4601L-O1(wANT_OUT)	1	24850702	
U791A	ASSEMBLED PWB	WCBN4601L-O1	{ 1}	24150122	
U791B	WIFI BT ANTENA	AN-241NIPK06_L	{ 1}	2050093	
U791C	WIFI BT ANTENA	AN-241NIPK06_R	{ 1}	2050094	
U791D	HOLDER	HOLDER(ANT)	{ 2}	27191377	

DTR-30.7(B)MDD

PACKING PROCEDURES PARTS LIST

REF. NO.	PART NAME	DESCRIPTION	Q'TY	PART NO. (SN)	REMARKS
[PACKING]					
A601	PAD	(AS)608	1	29092500A	
A601A	PAD	(L)608	{ 1}	29092501	
A601B	PAD	(R)608	{ 1}	29092502A	
A602	BAG	(650 x 600 x 0.515)	1	29100267	
A603	TAPE	(SEROHAN)NITTO NO.29	1	29110149	
A701	CARTON	DTR30.7	1	29055533	N
A702	POLYPROPYLENE TAPE	W50 SBT-70	1	29110200	
A703A	UPC LABEL	DTR30.7MDD	{ 1}	29392765	N
[ACCESSARY]					
A801	POLY BAG	w250xd350	1	29100250A	
A802	TAPE	(SEROHAN)NITTO NO.29	1	29110149	
A803	REMOTE CONTROL TRANSMITTER	RC-899M	1	24140899	N
A804	BATTERY	R6/AA(UM-3)	2	3010194	
A804 or	BATTERY	R6/AA(UM-3)	(2)	3010054	
A805	MIC	MIC-5011	1	245047	
A806	ANTENNA COIL	AM LOOP-ANTENNA	1	232207	
A807	FM ANT AS	Type W	1	292191	
A811	WARRANTY CARD	(INTEGRA)	1	29365157	
A901	INSTRUCTION MANUAL	BAS_En(DTR307)	1	29401993	N
A904	INSTRUCTION MANUAL	SAFETY_INT_En	1	29401786	
A920	INSTRUCTION SHEET	15AVR_DTSX_U12	1	29355946	
P9001	POWER SUPPLY CORD	AS-UC-2	1	253352ATES	!

DTR-30.7(B)MDD

PC BOARD PARTS LIST

U001 BAAF-1720-1G : NSP

CIRCUIT NO	PART NAME	DESCRIPTION	Q'TY	PART NO. (SN)	REMARKS
[SEMI CONDUCTOR]					
D4171	ZENER DIODE	DZ2J075M0L	1	224760750R2	
D4171 or	ZENER DIODE	UDZS7.5B	(1)	224550750R2	
D4172	ZENER DIODE	DZ2J075M0L	1	224760750R2	
D4172 or	ZENER DIODE	UDZS7.5B	(1)	224550750R2	
D4200	CHIP TYPE DIODE	DA2J10100	1	223303R2	
D4200 or	CHIP TYPE DIODE	1SS352	(1)	223234R2	
D4201	CHIP TYPE DIODE	DA2J10100	1	223303R2	
D4201 or	CHIP TYPE DIODE	1SS352	(1)	223234R2	
D4204	CHIP TYPE DIODE	DA2J10100	1	223303R2	
D4204 or	CHIP TYPE DIODE	1SS352	(1)	223234R2	
D4206	CHIP TYPE DIODE	DA2J10100	1	223303R2	
D4206 or	CHIP TYPE DIODE	1SS352	(1)	223234R2	
D4214	CHIP TYPE DIODE	DA2J10100	1	223303R2	
D4214 or	CHIP TYPE DIODE	1SS352	(1)	223234R2	
D4216	CHIP TYPE DIODE	DA2J10100	1	223303R2	
D4216 or	CHIP TYPE DIODE	1SS352	(1)	223234R2	
D4300	DIODE	RL1N4003	1	22380260T	
D4301	DIODE	RL1N4003	1	22380260T	
D4302	DIODE	RL1N4003	1	22380260T	
D4303	DIODE	RL1N4003	1	22380260T	
D4304	DIODE	RL1N4003	1	22380260T	
D4305	DIODE	RL1N4003	1	22380260T	
D4307	CHIP TYPE DIODE	DA2J10100	1	223303R2	
D4307 or	CHIP TYPE DIODE	1SS352	(1)	223234R2	
D4308	CHIP TYPE DIODE	DA2J10100	1	223303R2	
D4308 or	CHIP TYPE DIODE	1SS352	(1)	223234R2	
D4309	CHIP TYPE DIODE	DA2J10100	1	223303R2	
D4309 or	CHIP TYPE DIODE	1SS352	(1)	223234R2	
D4319	CHIP TYPE DIODE	DA2J10100	1	223303R2	
D4319 or	CHIP TYPE DIODE	1SS352	(1)	223234R2	
D4500	ZENER DIODE	DZ2J075M0L	1	224760750R2	
D4500 or	ZENER DIODE	UDZS7.5B	(1)	224550750R2	
D4501	ZENER DIODE	DZ2J075M0L	1	224760750R2	
D4501 or	ZENER DIODE	UDZS7.5B	(1)	224550750R2	
D5003	ZENER DIODE	DZ2J056M0L	1	224760560R2	
D5003 or	ZENER DIODE	UDZS5.6B	(1)	224550560R2	
D5004	ZENER DIODE	DZ2J056M0L	1	224760560R2	
D5004 or	ZENER DIODE	UDZS5.6B	(1)	224550560R2	
D5005	ZENER DIODE	DZ2J056M0L	1	224760560R2	
D5005 or	ZENER DIODE	UDZS5.6B	(1)	224550560R2	
D5006	ZENER DIODE	DZ2J056M0L	1	224760560R2	
D5006 or	ZENER DIODE	UDZS5.6B	(1)	224550560R2	
D6000	CHIP TYPE DIODE	DA2J10100	1	223303R2	
D6000 or	CHIP TYPE DIODE	1SS352	(1)	223234R2	
D6001	CHIP TYPE DIODE	DA2J10100	1	223303R2	
D6001 or	CHIP TYPE DIODE	1SS352	(1)	223234R2	
D6002	CHIP TYPE DIODE	DA2J10100	1	223303R2	
D6002 or	CHIP TYPE DIODE	1SS352	(1)	223234R2	
D6003	CHIP TYPE DIODE	DA2J10100	1	223303R2	
D6003 or	CHIP TYPE DIODE	1SS352	(1)	223234R2	
D6004	CHIP TYPE DIODE	DA2J10100	1	223303R2	
D6004 or	CHIP TYPE DIODE	1SS352	(1)	223234R2	
D6005	CHIP TYPE DIODE	DA2J10100	1	223303R2	
D6005 or	CHIP TYPE DIODE	1SS352	(1)	223234R2	
D6006	CHIP TYPE DIODE	DA2J10100	1	223303R2	
D6006 or	CHIP TYPE DIODE	1SS352	(1)	223234R2	
D6100	CHIP TYPE DIODE	DA2J10100	1	223303R2	
D6100 or	CHIP TYPE DIODE	1SS352	(1)	223234R2	
D6101	CHIP TYPE DIODE	DA2J10100	1	223303R2	
D6101 or	CHIP TYPE DIODE	1SS352	(1)	223234R2	

D6102	CHIP TYPE DIODE	DA2J10100	1	223303R2	
D6102 or	CHIP TYPE DIODE	1SS352	(1)	223234R2	
D6103	CHIP TYPE DIODE	DA2J10100	1	223303R2	
D6103 or	CHIP TYPE DIODE	1SS352	(1)	223234R2	
D6104	CHIP TYPE DIODE	DA2J10100	1	223303R2	
D6104 or	CHIP TYPE DIODE	1SS352	(1)	223234R2	
D6105	CHIP TYPE DIODE	DA2J10100	1	223303R2	
D6105 or	CHIP TYPE DIODE	1SS352	(1)	223234R2	
D6106	CHIP TYPE DIODE	DA2J10100	1	223303R2	
D6106 or	CHIP TYPE DIODE	1SS352	(1)	223234R2	
D6110	CHIP TYPE DIODE	DA2J10100	1	223303R2	
D6110 or	CHIP TYPE DIODE	1SS352	(1)	223234R2	
D6111	CHIP TYPE DIODE	DA2J10100	1	223303R2	
D6111 or	CHIP TYPE DIODE	1SS352	(1)	223234R2	
D6112	CHIP TYPE DIODE	DA2J10100	1	223303R2	
D6112 or	CHIP TYPE DIODE	1SS352	(1)	223234R2	
D6113	CHIP TYPE DIODE	DA2J10100	1	223303R2	
D6113 or	CHIP TYPE DIODE	1SS352	(1)	223234R2	
D6114	CHIP TYPE DIODE	DA2J10100	1	223303R2	
D6114 or	CHIP TYPE DIODE	1SS352	(1)	223234R2	
D6115	CHIP TYPE DIODE	DA2J10100	1	223303R2	
D6115 or	CHIP TYPE DIODE	1SS352	(1)	223234R2	
D6116	CHIP TYPE DIODE	DA2J10100	1	223303R2	
D6116 or	CHIP TYPE DIODE	1SS352	(1)	223234R2	
D6401	DIODE	TS10B06G-07	1	22380379	
D6401A	HEAT SINK	RAD-196	1	27160545	
D6402	CHIP TYPE DIODE	DA2J10100	1	223303R2	
D6402 or	CHIP TYPE DIODE	1SS352	(1)	223234R2	
D6451	CHIP TYPE DIODE	DA2J10100	1	223303R2	
D6451 or	CHIP TYPE DIODE	1SS352	(1)	223234R2	
D6452	CHIP TYPE DIODE	DA2J10100	1	223303R2	
D6452 or	CHIP TYPE DIODE	1SS352	(1)	223234R2	
D6455	ZENER DIODE	DZ2J033M0L	1	224760330R2	
D6455 or	ZENER DIODE	UDZS3.3B	(1)	224550330R2	
D6456	ZENER DIODE	DZ2J036M0L	1	224760360R2	
D6456 or	ZENER DIODE	UDZS3.6B	(1)	224550360R2	
D6457	CHIP TYPE DIODE	DA2J10100	1	223303R2	
D6457 or	CHIP TYPE DIODE	1SS352	(1)	223234R2	
D6460	CHIP TYPE DIODE	DA2J10100	1	223303R2	
D6460 or	CHIP TYPE DIODE	1SS352	(1)	223234R2	
Q4001	HYBRID IC	NJW1298FU1	1	22242925R3	**N**
Q4003	HYBRID IC	NJM4580CG	1	22242922R2	
Q4100	TRANSISTOR	RTAN430C-T112-1	1	2217780R2	
Q4101	TRANSISTOR	RTAN430C-T112-1	1	2217780R2	
Q4102	TRANSISTOR	RTAN430C-T112-1	1	2217780R2	
Q4103	TRANSISTOR	RTAN430C-T112-1	1	2217780R2	
Q4104	TRANSISTOR	RTAN430C-T112-1	1	2217780R2	
Q4105	TRANSISTOR	RTAN430C-T112-1	1	2217780R2	
Q4106	TRANSISTOR	RTAN430C-T112-1	1	2217780R2	
Q4107	TRANSISTOR	RTAN430C-T112-1	1	2217780R2	
Q4110	TRANSISTOR	RTAN430C-T112-1	1	2217780R2	
Q4111	TRANSISTOR	RTAN430C-T112-1	1	2217780R2	
Q4112	TRANSISTOR	RTAN430C-T112-1	1	2217780R2	
Q4113	TRANSISTOR	RTAN430C-T112-1	1	2217780R2	
Q4114	TRANSISTOR	RTAN430C-T112-1	1	2217780R2	
Q4115	TRANSISTOR	RTAN430C-T112-1	1	2217780R2	
Q4116	TRANSISTOR	RTAN430C-T112-1	1	2217780R2	
Q4117	TRANSISTOR	RTAN430C-T112-1	1	2217780R2	
Q4130	HYBRID IC	NJM4580CG	1	22242922R2	
Q4170	HYBRID IC	78M15HF(NJM78M15FA)	1	222780155JRC	
Q4170A	HEAT SINK	RAD-196	1	27160545	
Q4171	HYBRID IC	79M15HF(NJM79M15FA)	1	222790155JRC	
Q4184	TRANSISTOR	KTC4373-Y	1	2218120R2	
Q4184 or	TRANSISTOR	2SC2881-Y	(1)	2217564AR2	
Q4184 or	TRANSISTOR	INC5001AP1-T111	(1)	2218100R2	
Q4185	TRANSISTOR	KTA1661-Y	1	2217864R2	
Q4185 or	TRANSISTOR	2SA1201-Y	(1)	2217554AR2	

Q4185 or	TRANSISTOR	INA5001AP1-T111	(1)	2218030R2
Q4200	TRANSISTOR	KRC105S	1	2217290R2
Q4201	TRANSISTOR	KRC105S	1	2217290R2
Q4222	TRANSISTOR	RTAN430C-T112-1	1	2217780R2
Q4223	TRANSISTOR	RTAN430C-T112-1	1	2217780R2
Q4224	TRANSISTOR	RTAN430C-T112-1	1	2217780R2
Q4232	TRANSISTOR	RTAN430C-T112-1	1	2217780R2
Q4233	TRANSISTOR	RTAN430C-T112-1	1	2217780R2
Q4234	TRANSISTOR	RTAN430C-T112-1	1	2217780R2
Q4301	HYBRID IC	NJW1194	1	22242893R2
Q4302	TRANSISTOR	RTAN430C-T112-1	1	2217780R2
Q4303	TRANSISTOR	RTAN430C-T112-1	1	2217780R2
Q4530	HYBRID IC	NJM4580CG	1	22242922R2
Q5003	TRANSISTOR	2SC2713-BL	1	2213136R2
Q5004	TRANSISTOR	2SC2713-BL	1	2213136R2
Q5005	TRANSISTOR	2SC2713-BL	1	2213136R2
Q5006	TRANSISTOR	2SC2713-BL	1	2213136R2
Q5013	TRANSISTOR	2SC2713-BL	1	2213136R2
Q5014	TRANSISTOR	2SC2713-BL	1	2213136R2
Q5015	TRANSISTOR	2SC2713-BL	1	2213136R2
Q5016	TRANSISTOR	2SC2713-BL	1	2213136R2
Q5033	TRANSISTOR	INA6006AP1-T111	1	2217980R2
Q5034	TRANSISTOR	INA6006AP1-T111	1	2217980R2
Q5035	TRANSISTOR	INA6006AP1-T111	1	2217980R2
Q5036	TRANSISTOR	INA6006AP1-T111	1	2217980R2
Q5043	TRANSISTOR	INC6006AP1-T111	1	2217990R2
Q5044	TRANSISTOR	INC6006AP1-T111	1	2217990R2
Q5045	TRANSISTOR	INC6006AP1-T111	1	2217990R2
Q5046	TRANSISTOR	INC6006AP1-T111	1	2217990R2
Q5053	TRANSISTOR	INC5001AP1-T111	1	2218100R2
Q5054	TRANSISTOR	INC5001AP1-T111	1	2218100R2
Q5055	TRANSISTOR	INC5001AP1-T111	1	2218100R2
Q5056	TRANSISTOR	INC5001AP1-T111	1	2218100R2
Q6000	TRANSISTOR	2SD2704K	1	2218130R2
Q6001	TRANSISTOR	2SD2704K	1	2218130R2
Q6002	TRANSISTOR	2SD2704K	1	2218130R2
Q6003	TRANSISTOR	2SD2704K	1	2218130R2
Q6004	TRANSISTOR	2SD2704K	1	2218130R2
Q6005	TRANSISTOR	2SD2704K	1	2218130R2
Q6006	TRANSISTOR	2SD2704K	1	2218130R2
Q6013	TRANSISTOR	2SC2713-BL	1	2213136R2
Q6014	TRANSISTOR	2SC2713-BL	1	2213136R2
Q6015	TRANSISTOR	2SC2713-BL	1	2213136R2
Q6016	TRANSISTOR	2SC2713-BL	1	2213136R2
Q6023	TRANSISTOR	2SA1163-BL	1	2216756R2
Q6024	TRANSISTOR	2SA1163-BL	1	2216756R2
Q6025	TRANSISTOR	2SA1163-BL	1	2216756R2
Q6026	TRANSISTOR	2SA1163-BL	1	2216756R2
Q6033	TRANSISTOR	TTC004B_Q(S	1	2218022
Q6034	TRANSISTOR	TTC004B_Q(S	1	2218022
Q6035	TRANSISTOR	TTC004B_Q(S	1	2218022
Q6036	TRANSISTOR	TTC004B_Q(S	1	2218022
Q6043	TRANSISTOR	TTA004B_Q(S	1	2218012
Q6044	TRANSISTOR	TTA004B_Q(S	1	2218012
Q6045	TRANSISTOR	TTA004B_Q(S	1	2218012
Q6046	TRANSISTOR	TTA004B_Q(S	1	2218012
Q6070	TRANSISTOR	2SC2713-BL	1	2213136R2
Q6071	TRANSISTOR	2SC2713-BL	1	2213136R2
Q6072	TRANSISTOR	2SC2713-BL	1	2213136R2
Q6073	TRANSISTOR	2SC2713-BL	1	2213136R2
Q6074	TRANSISTOR	2SC2713-BL	1	2213136R2
Q6075	TRANSISTOR	2SC2713-BL	1	2213136R2
Q6076	TRANSISTOR	2SC2713-BL	1	2213136R2
Q6300	HYBRID IC	LM61CIZ	1	22242212
Q6300A	RETAINER	(PTH)	1	27141884-1
Q6401	TRANSISTOR	2SC2712-GR	1	2213145R2
Q6451	TRANSISTOR	2SC2713-BL	1	2213136R2

Q6452	TRANSISTOR	2SC2713-BL	1	2213136R2
Q6453	TRANSISTOR	2SA1163-BL	1	2216756R2
Q6454	TRANSISTOR	2SA1163-BL	1	2216756R2
Q6455	TRANSISTOR	2SC2713-BL	1	2213136R2
Q6456	TRANSISTOR	KRA102S	1	2216220R2
Q6456 or	TRANSISTOR	DTA124EKA	(1)	2216240R2
[CAPACITOR]				
C4000	UPZ TYPE PLASTIC FILM CAPACITOR	2AUPZTF221JE	1	376332214T
C4001	UPZ TYPE PLASTIC FILM CAPACITOR	2AUPZTF221JE	1	376332214T
C4002	CHIP TYPE CERAMIC CAPACITOR	CC725CH1H-221J1	1	342102214R1
C4003	CHIP TYPE CERAMIC CAPACITOR	CC725CH1H-221J1	1	342102214R1
C4004	CHIP TYPE CERAMIC CAPACITOR	CC725CH1H-221J1	1	342102214R1
C4005	CHIP TYPE CERAMIC CAPACITOR	CC725CH1H-221J1	1	342102214R1
C4006	CHIP TYPE CERAMIC CAPACITOR	CC725CH1H-221J1	1	342102214R1
C4007	CHIP TYPE CERAMIC CAPACITOR	CC725CH1H-221J1	1	342102214R1
C4008	CHIP TYPE CERAMIC CAPACITOR	CC725CH1H-221J1	1	342102214R1
C4009	CHIP TYPE CERAMIC CAPACITOR	CC725CH1H-221J1	1	342102214R1
C4010	CHIP TYPE CERAMIC CAPACITOR	CC725CH1H-221J1	1	342102214R1
C4011	CHIP TYPE CERAMIC CAPACITOR	CC725CH1H-221J1	1	342102214R1
C4012	UPZ TYPE PLASTIC FILM CAPACITOR	2AUPZTF221JE	1	376332214T
C4013	UPZ TYPE PLASTIC FILM CAPACITOR	2AUPZTF221JE	1	376332214T
C4014	CHIP TYPE CERAMIC CAPACITOR	CC725CH1H-102J1	1	342101024R1
C4015	CHIP TYPE CERAMIC CAPACITOR	CC725CH1H-102J1	1	342101024R1
C4030	CHIP TYPE CERAMIC CAPACITOR	CC725CH1H-221J1	1	342102214R1
C4031	CHIP TYPE CERAMIC CAPACITOR	CC725CH1H-221J1	1	342102214R1
C4032	CHIP TYPE CERAMIC CAPACITOR	CC725CH1H-221J1	1	342102214R1
C4033	CHIP TYPE CERAMIC CAPACITOR	CC725CH1H-221J1	1	342102214R1
C4034	CHIP TYPE CERAMIC CAPACITOR	CC725CH1H-221J1	1	342102214R1
C4035	CHIP TYPE CERAMIC CAPACITOR	CC725CH1H-221J1	1	342102214R1
C4036	CHIP TYPE CERAMIC CAPACITOR	CC725CH1H-221J1	1	342102214R1
C4037	CHIP TYPE CERAMIC CAPACITOR	CC725CH1H-221J1	1	342102214R1
C4051	UTSP TYPE ELECTROLYTIC CAPACITOR	CE04W10V-100M(UTSP)	1	397531017AT
C4052	UTSP TYPE ELECTROLYTIC CAPACITOR	CE04W10V-100M(UTSP)	1	397531017AT
C4053	UTSP TYPE ELECTROLYTIC CAPACITOR	CE04W10V-100M(UTSP)	1	397531017AT
C4054	UTSP TYPE ELECTROLYTIC CAPACITOR	CE04W10V-100M(UTSP)	1	397531017AT
C4055	UTSP TYPE ELECTROLYTIC CAPACITOR	CE04W10V-100M(UTSP)	1	397531017AT
C4056	UTSP TYPE ELECTROLYTIC CAPACITOR	CE04W10V-100M(UTSP)	1	397531017AT
C4057	UTSP TYPE ELECTROLYTIC CAPACITOR	CE04W10V-220M(UTSP)	1	397532217AT
C4058	UTSP TYPE ELECTROLYTIC CAPACITOR	CE04W10V-220M(UTSP)	1	397532217AT
C4059	UTSP TYPE ELECTROLYTIC CAPACITOR	CE04W25V-47M(UTSP)	1	397554707AT
C4060	UTSP TYPE ELECTROLYTIC CAPACITOR	CE04W50V-10M(UTSP)	1	397581007AT
C4061	UTSP TYPE ELECTROLYTIC CAPACITOR	CE04W25V-47M(UTSP)	1	397554707AT
C4070	UTSP TYPE ELECTROLYTIC CAPACITOR	CE04W50V 47M(UTSP)	1	397584707AT
C4071	UTSP TYPE ELECTROLYTIC CAPACITOR	CE04W50V 47M(UTSP)	1	397584707AT
C4072	UTSP TYPE ELECTROLYTIC CAPACITOR	CE04W50V 47M(UTSP)	1	397584707AT
C4073	UTSP TYPE ELECTROLYTIC CAPACITOR	CE04W25V-47M(UTSP)	1	397554707AT
C4074	UTSP TYPE ELECTROLYTIC CAPACITOR	CE04W25V-47M(UTSP)	1	397554707AT
C4075	UTSP TYPE ELECTROLYTIC CAPACITOR	CE04W25V-47M(UTSP)	1	397554707AT
C4076	UTSP TYPE ELECTROLYTIC CAPACITOR	CE04W25V-47M(UTSP)	1	397554707AT
C4077	UTSP TYPE ELECTROLYTIC CAPACITOR	CE04W50V 47M(UTSP)	1	397584707AT
C4078	UTSP TYPE ELECTROLYTIC CAPACITOR	CE04W50V 47M(UTSP)	1	397584707AT
C4079	UTSP TYPE ELECTROLYTIC CAPACITOR	CE04W50V 47M(UTSP)	1	397584707AT
C4080	UTSP TYPE ELECTROLYTIC CAPACITOR	CE04W50V 47M(UTSP)	1	397584707AT
C4081	UTSP TYPE ELECTROLYTIC CAPACITOR	CE04W50V 47M(UTSP)	1	397584707AT
C4090	CHIP TYPE CERAMIC CAPACITOR	CC725CH1H-101J1	1	342101014R1
C4091	CHIP TYPE CERAMIC CAPACITOR	CC725CH1H-101J1	1	342101014R1
C4100	UTSP TYPE ELECTROLYTIC CAPACITOR	CE04W50V 47M(UTSP)	1	397584707AT
C4101	UTSP TYPE ELECTROLYTIC CAPACITOR	CE04W50V 47M(UTSP)	1	397584707AT
C4102	UTSP TYPE ELECTROLYTIC CAPACITOR	CE04W50V 47M(UTSP)	1	397584707AT
C4103	UTSP TYPE ELECTROLYTIC CAPACITOR	CE04W50V 47M(UTSP)	1	397584707AT
C4104	UTSP TYPE ELECTROLYTIC CAPACITOR	CE04W50V 47M(UTSP)	1	397584707AT
C4105	UTSP TYPE ELECTROLYTIC CAPACITOR	CE04W50V 47M(UTSP)	1	397584707AT
C4106	UTSP TYPE ELECTROLYTIC CAPACITOR	CE04W50V 47M(UTSP)	1	397584707AT
C4107	UTSP TYPE ELECTROLYTIC CAPACITOR	CE04W50V 47M(UTSP)	1	397584707AT
C4108	UTSP TYPE ELECTROLYTIC CAPACITOR	CE04W50V 47M(UTSP)	1	397584707AT
C4109	UTSP TYPE ELECTROLYTIC CAPACITOR	CE04W50V 47M(UTSP)	1	397584707AT
C4130	UTSP TYPE ELECTROLYTIC CAPACITOR	CE04W50V 47M(UTSP)	1	397584707AT

C4131	CHIP TYPE CERAMIC CAPACITOR	CC725CH1H-221J1	1	342102214R1
C4132	CHIP TYPE CERAMIC CAPACITOR	CK725B1H-103K1	1	332101035R1
C4166	UTSP TYPE ELECTROLYTIC CAPACITOR	CE04W25V-220M(UTSP)	1	397552217T
C4167	UTSP TYPE ELECTROLYTIC CAPACITOR	CE04W25V-220M(UTSP)	1	397552217T
C4170	TF TYPE PLASTIC FILM CAPACITOR	ECQ-V50V-104J	1	374721044T
C4170 or	FILM C	C281H104J20A21A	(1)	376821044T
C4171	TF TYPE PLASTIC FILM CAPACITOR	ECQ-V50V-104J	1	374721044T
C4171 or	FILM C	C281H104J20A21A	(1)	376821044T
C4172	UTSP TYPE ELECTROLYTIC CAPACITOR	CE04W50V-10M(UTSP)	1	397581007AT
C4173	UTSP TYPE ELECTROLYTIC CAPACITOR	CE04W50V-10M(UTSP)	1	397581007AT
C4174	UTSP TYPE ELECTROLYTIC CAPACITOR	CE04W16V-470M(UTSP)	1	397544717T
C4175	UTSP TYPE ELECTROLYTIC CAPACITOR	CE04W16V-470M(UTSP)	1	397544717T
C4176	JAMICON TYPE ELECTROLYTIC CAPACITOR	CE04W16V-100M	1	398541017T
C4177	JAMICON TYPE ELECTROLYTIC CAPACITOR	CE04W16V-100M	1	398541017T
C4184	UTSP TYPE ELECTROLYTIC CAPACITOR	CE04W25V-220M(UTSP)	1	397552217T
C4185	UTSP TYPE ELECTROLYTIC CAPACITOR	CE04W25V-220M(UTSP)	1	397552217T
C4186	UTSP TYPE ELECTROLYTIC CAPACITOR	CE04W25V-220M(UTSP)	1	397552217T
C4187	UTSP TYPE ELECTROLYTIC CAPACITOR	CE04W25V-220M(UTSP)	1	397552217T
C4200	CHIP TYPE CERAMIC CAPACITOR	CK725B1H-104K1	1	332101045R1
C4201	CHIP TYPE CERAMIC CAPACITOR	CC725CH1H-102J1	1	342101024R1
C4203	CHIP TYPE CERAMIC CAPACITOR	CC725CH1H-102J1	1	342101024R1
C4204	CHIP TYPE CERAMIC CAPACITOR	CC725CH1H-102J1	1	342101024R1
C4206	CHIP TYPE CERAMIC CAPACITOR	CC725CH1H-102J1	1	342101024R1
C4207	CHIP TYPE CERAMIC CAPACITOR	CC725CH1H-102J1	1	342101024R1
C4208	CHIP TYPE CERAMIC CAPACITOR	CC725CH1H-102J1	1	342101024R1
C4209	UTSP TYPE ELECTROLYTIC CAPACITOR	CE04W25V-47M(UTSP)	1	397554707AT
C4210	UTSP TYPE ELECTROLYTIC CAPACITOR	CE04W25V-47M(UTSP)	1	397554707AT
C4211	CHIP TYPE CERAMIC CAPACITOR	CK725B1H-104K1	1	332101045R1
C4212	TF TYPE PLASTIC FILM CAPACITOR	ECQ-V50V-104J	1	374721044T
C4212 or	FILM C	C281H104J20A21A	(1)	376821044T
C4213	CHIP TYPE CERAMIC CAPACITOR	CC725CH1H-102J1	1	342101024R1
C4214	CHIP TYPE CERAMIC CAPACITOR	CC725CH1H-102J1	1	342101024R1
C4222	UTSP TYPE ELECTROLYTIC CAPACITOR	CE04W50V 47M(UTSP)	1	397584707AT
C4223	UTSP TYPE ELECTROLYTIC CAPACITOR	CE04W50V 47M(UTSP)	1	397584707AT
C4224	UTSP TYPE ELECTROLYTIC CAPACITOR	CE04W50V 47M(UTSP)	1	397584707AT
C4300	TF TYPE PLASTIC FILM CAPACITOR	ECQ-V50V-334J	1	374723344T
C4300 or	FILM C	C281H334J20A21A	(1)	376823344T
C4301	JAMICON TYPE ELECTROLYTIC CAPACITOR	CE04W35V-1000M	1	398561027T
C4302	JAMICON TYPE ELECTROLYTIC CAPACITOR	CE04W35V-1000M	1	398561027T
C4305	CHIP TYPE CERAMIC CAPACITOR	CC725CH1H-221J1	1	342102214R1
C4306	CHIP TYPE CERAMIC CAPACITOR	CC725CH1H-221J1	1	342102214R1
C4307	UTSP TYPE ELECTROLYTIC CAPACITOR	CE04W50V 47M(UTSP)	1	397584707AT
C4308	UTSP TYPE ELECTROLYTIC CAPACITOR	CE04W50V 47M(UTSP)	1	397584707AT
C4311	UTSP TYPE ELECTROLYTIC CAPACITOR	CE04W50V-4.7M(UTSP)	1	397580477AT
C4312	CHIP TYPE CERAMIC CAPACITOR	CK725B1H-104K1	1	332101045R1
C4313	CHIP TYPE CERAMIC CAPACITOR	CK725B1H-332K1	1	332103325R1
C4314	UTSP TYPE ELECTROLYTIC CAPACITOR	CE04W25V-47M(UTSP)	1	397554707AT
C4315	UTSP TYPE ELECTROLYTIC CAPACITOR	CE04W50V-4.7M(UTSP)	1	397580477AT
C4316	CHIP TYPE CERAMIC CAPACITOR	CK725B1H-104K1	1	332101045R1
C4317	CHIP TYPE CERAMIC CAPACITOR	CK725B1H-332K1	1	332103325R1
C4318	UTSP TYPE ELECTROLYTIC CAPACITOR	CE04W25V-47M(UTSP)	1	397554707AT
C4319	UTSP TYPE ELECTROLYTIC CAPACITOR	CE04W50V-10M(UTSP)	1	397581007AT
C4324	CHIP TYPE CERAMIC CAPACITOR	CC725CH1H-102J1	1	342101024R1
C4400	CHIP TYPE CERAMIC CAPACITOR	CK725B1H-102K1	1	332101025R1
C4401	CHIP TYPE CERAMIC CAPACITOR	CK725B1H-102K1	1	332101025R1
C4530	UTSP TYPE ELECTROLYTIC CAPACITOR	CE04W25V-47M(UTSP)	1	397554707AT
C4531	UTSP TYPE ELECTROLYTIC CAPACITOR	CE04W25V-47M(UTSP)	1	397554707AT
C4532	CHIP TYPE CERAMIC CAPACITOR	CC725CH1H-102J1	1	342101024R1
C4533	CHIP TYPE CERAMIC CAPACITOR	CC725CH1H-102J1	1	342101024R1
C4534	TF TYPE PLASTIC FILM CAPACITOR	ECQ-V50V-123J	1	374721234T
C4535	TF TYPE PLASTIC FILM CAPACITOR	ECQ-V50V-123J	1	374721234T
C4536	UMXR TYPE PLASTIC FILM CAPACITOR	1JUMXRTF332JE	1	376593324T
C4537	UMXR TYPE PLASTIC FILM CAPACITOR	1JUMXRTF332JE	1	376593324T
C4538	CHIP TYPE CERAMIC CAPACITOR	CC725CH1H-151J1	1	342101514R1
C4539	CHIP TYPE CERAMIC CAPACITOR	CC725CH1H-151J1	1	342101514R1
C4540	CHIP TYPE CERAMIC CAPACITOR	CC725CH1H-471J1	1	342104714R1
C4541	CHIP TYPE CERAMIC CAPACITOR	CC725CH1H-471J1	1	342104714R1

C4542	CHIP TYPE CERAMIC CAPACITOR	CC725CH1H-101J1	1	342101014R1
C4543	CHIP TYPE CERAMIC CAPACITOR	CC725CH1H-101J1	1	342101014R1
C4544	UTSP TYPE ELECTROLYTIC CAPACITOR	CE04W50V-10M(UTSP)	1	397581007AT
C4545	UTSP TYPE ELECTROLYTIC CAPACITOR	CE04W50V-10M(UTSP)	1	397581007AT
C4546	UTSP TYPE ELECTROLYTIC CAPACITOR	CE04W25V-47M(UTSP)	1	397554707AT
C4547	UTSP TYPE ELECTROLYTIC CAPACITOR	CE04W25V-47M(UTSP)	1	397554707AT
C4548	CHIP TYPE CERAMIC CAPACITOR	CK725F1E-104Z1	1	332161040R1
C4549	CHIP TYPE CERAMIC CAPACITOR	CK725F1E-104Z1	1	332161040R1
C4550	UTSP TYPE ELECTROLYTIC CAPACITOR	CE04W10V-220M(UTSP)	1	397532217AT
C4551	UTSP TYPE ELECTROLYTIC CAPACITOR	CE04W10V-220M(UTSP)	1	397532217AT
C5003	UPZ TYPE PLASTIC FILM CAPACITOR	2AUPZTF471JE	1	376334714T
C5004	UPZ TYPE PLASTIC FILM CAPACITOR	2AUPZTF471JE	1	376334714T
C5005	UPZ TYPE PLASTIC FILM CAPACITOR	2AUPZTF471JE	1	376334714T
C5006	UPZ TYPE PLASTIC FILM CAPACITOR	2AUPZTF471JE	1	376334714T
C5013	UTSP TYPE ELECTROLYTIC CAPACITOR	CE04W50V 47M(UTSP)	1	397584707AT
C5014	UTSP TYPE ELECTROLYTIC CAPACITOR	CE04W50V 47M(UTSP)	1	397584707AT
C5015	UTSP TYPE ELECTROLYTIC CAPACITOR	CE04W50V 47M(UTSP)	1	397584707AT
C5016	UTSP TYPE ELECTROLYTIC CAPACITOR	CE04W50V 47M(UTSP)	1	397584707AT
C5023	UTSP TYPE ELECTROLYTIC CAPACITOR	CE04W50V-10M(UTSP)	1	397581007AT
C5024	UTSP TYPE ELECTROLYTIC CAPACITOR	CE04W50V-10M(UTSP)	1	397581007AT
C5025	UTSP TYPE ELECTROLYTIC CAPACITOR	CE04W50V-10M(UTSP)	1	397581007AT
C5026	UTSP TYPE ELECTROLYTIC CAPACITOR	CE04W50V-10M(UTSP)	1	397581007AT
C5043	UTSP TYPE ELECTROLYTIC CAPACITOR	CE04W25V-220M(UTSP)	1	397552217T
C5044	UTSP TYPE ELECTROLYTIC CAPACITOR	CE04W25V-220M(UTSP)	1	397552217T
C5045	UTSP TYPE ELECTROLYTIC CAPACITOR	CE04W25V-220M(UTSP)	1	397552217T
C5046	UTSP TYPE ELECTROLYTIC CAPACITOR	CE04W25V-220M(UTSP)	1	397552217T
C5053	UTSP TYPE ELECTROLYTIC CAPACITOR	CE04W50V 47M(UTSP)	1	397584707AT
C5054	UTSP TYPE ELECTROLYTIC CAPACITOR	CE04W50V 47M(UTSP)	1	397584707AT
C5055	UTSP TYPE ELECTROLYTIC CAPACITOR	CE04W50V 47M(UTSP)	1	397584707AT
C5056	UTSP TYPE ELECTROLYTIC CAPACITOR	CE04W50V 47M(UTSP)	1	397584707AT
C5083	CERAMIC CAPACITOR	CC45SL50V-040C	1	345020401T
C5084	CERAMIC CAPACITOR	CC45SL50V-040C	1	345020401T
C5085	CERAMIC CAPACITOR	CC45SL50V-040C	1	345020401T
C5086	CERAMIC CAPACITOR	CC45SL50V-040C	1	345020401T
C5093	UPZ TYPE PLASTIC FILM CAPACITOR	2AUPZTF101JE	1	376331014T
C5094	UPZ TYPE PLASTIC FILM CAPACITOR	2AUPZTF101JE	1	376331014T
C5095	UPZ TYPE PLASTIC FILM CAPACITOR	2AUPZTF101JE	1	376331014T
C5096	UPZ TYPE PLASTIC FILM CAPACITOR	2AUPZTF101JE	1	376331014T
C5103	VR TYPE ELECTROLYTIC CAPACITOR	CE04W100V-22M(VR)	1	394692207T
C5104	VR TYPE ELECTROLYTIC CAPACITOR	CE04W100V-22M(VR)	1	394692207T
C5105	VR TYPE ELECTROLYTIC CAPACITOR	CE04W100V-22M(VR)	1	394692207T
C5106	VR TYPE ELECTROLYTIC CAPACITOR	CE04W100V-22M(VR)	1	394692207T
C5113	VR TYPE ELECTROLYTIC CAPACITOR	CE04W100V-22M(VR)	1	394692207T
C5114	VR TYPE ELECTROLYTIC CAPACITOR	CE04W100V-22M(VR)	1	394692207T
C5115	VR TYPE ELECTROLYTIC CAPACITOR	CE04W100V-22M(VR)	1	394692207T
C5116	VR TYPE ELECTROLYTIC CAPACITOR	CE04W100V-22M(VR)	1	394692207T
C6003	CHIP TYPE CERAMIC CAPACITOR	CK725B1H-103K1	1	332101035R1
C6004	CHIP TYPE CERAMIC CAPACITOR	CK725B1H-103K1	1	332101035R1
C6005	CHIP TYPE CERAMIC CAPACITOR	CK725B1H-103K1	1	332101035R1
C6006	CHIP TYPE CERAMIC CAPACITOR	CK725B1H-103K1	1	332101035R1
C6043	UTSP TYPE ELECTROLYTIC CAPACITOR	CE04W50V 47M(UTSP)	1	397584707AT
C6044	UTSP TYPE ELECTROLYTIC CAPACITOR	CE04W50V 47M(UTSP)	1	397584707AT
C6045	UTSP TYPE ELECTROLYTIC CAPACITOR	CE04W50V 47M(UTSP)	1	397584707AT
C6046	UTSP TYPE ELECTROLYTIC CAPACITOR	CE04W50V 47M(UTSP)	1	397584707AT
C6050	TF TYPE PLASTIC FILM CAPACITOR	ECQ-V50V-224J	1	374722244T
C6050 or	FILM C	C281H224J20A21A	(1)	376822244T
C6051	TF TYPE PLASTIC FILM CAPACITOR	ECQ-V50V-224J	1	374722244T
C6051 or	FILM C	C281H224J20A21A	(1)	376822244T
C6052	TF TYPE PLASTIC FILM CAPACITOR	ECQ-V50V-224J	1	374722244T
C6052 or	FILM C	C281H224J20A21A	(1)	376822244T
C6053	TF TYPE PLASTIC FILM CAPACITOR	ECQ-V50V-224J	1	374722244T
C6053 or	FILM C	C281H224J20A21A	(1)	376822244T
C6054	TF TYPE PLASTIC FILM CAPACITOR	ECQ-V50V-224J	1	374722244T
C6054 or	FILM C	C281H224J20A21A	(1)	376822244T
C6055	TF TYPE PLASTIC FILM CAPACITOR	ECQ-V50V-224J	1	374722244T
C6055 or	FILM C	C281H224J20A21A	(1)	376822244T
C6056	TF TYPE PLASTIC FILM CAPACITOR	ECQ-V50V-224J	1	374722244T

C6056 or	FILM C	C281H224J20A21A	(1)	376822244T
C6250	TF TYPE PLASTIC FILM CAPACITOR	ECQ-V50V-473J	1	374724734T
C6251	TF TYPE PLASTIC FILM CAPACITOR	ECQ-V50V-473J	1	374724734T
C6252	TF TYPE PLASTIC FILM CAPACITOR	ECQ-V50V-473J	1	374724734T
C6253	TF TYPE PLASTIC FILM CAPACITOR	ECQ-V50V-473J	1	374724734T
C6254	TF TYPE PLASTIC FILM CAPACITOR	ECQ-V50V-473J	1	374724734T
C6255	TF TYPE PLASTIC FILM CAPACITOR	ECQ-V50V-473J	1	374724734T
C6256	TF TYPE PLASTIC FILM CAPACITOR	ECQ-V50V-473J	1	374724734T
C6301	CHIP TYPE CERAMIC CAPACITOR	CK725F1E-104Z1	1	332161040R1
C6401	ELECTROLYTIC CAPACITOR	CE69W69V-10000MM	1	3504509
C6401 or	ELECTROLYTIC CAPACITOR	CE69W69V-10000MMJ	(1)	3504517
C6402	ELECTROLYTIC CAPACITOR	CE69W69V-10000MM	1	3504509
C6402 or	ELECTROLYTIC CAPACITOR	CE69W69V-10000MMJ	(1)	3504517
C6403	TF TYPE PLASTIC FILM CAPACITOR	ECQ-V100V-334J	1	374733344T
C6403 or	FILM C	C282A334J20A21A	(1)	376833344T
C6404	TF TYPE PLASTIC FILM CAPACITOR	ECQ-V100V-334J	1	374733344T
C6404 or	FILM C	C282A334J20A21A	(1)	376833344T
C6408	CHIP TYPE CERAMIC CAPACITOR	CK725B1H-104K1	1	332101045R1
C6451	UTSP TYPE ELECTROLYTIC CAPACITOR	CE04W25V-220M(UTSP)	1	397552217T
C6452	CHIP TYPE CERAMIC CAPACITOR	CK725F1E-104Z1	1	332161040R1
C6453	UTSP TYPE ELECTROLYTIC CAPACITOR	CE04W50V-1M(UTSP)	1	397580107AT
C6454	CHIP TYPE CERAMIC CAPACITOR	CC725CH1H-101J1	1	342101014R1
C6455	TF TYPE PLASTIC FILM CAPACITOR	ECQ-V50V-103J	1	374721034T
C6456	UTSP TYPE ELECTROLYTIC CAPACITOR	CE04W50V-10M(UTSP)	1	397581007AT
C6457	CHIP TYPE CERAMIC CAPACITOR	CK725F1A-105Z1	1	332181050R1
C6459	CHIP TYPE CERAMIC CAPACITOR	CK725B1H-222K1	1	332102225R1
[RESISTOR]				
R4000	CHIP TYPE CARBON RESISTOR	RN72K1J-331JE	1	435033314R1
R4001	CHIP TYPE CARBON RESISTOR	RN72K1J-331JE	1	435033314R1
R4002	CHIP TYPE CARBON RESISTOR	RN72K1J-104JE	1	435031044R1
R4003	CHIP TYPE CARBON RESISTOR	RN72K1J-104JE	1	435031044R1
R4004	CHIP TYPE CARBON RESISTOR	RN72K1J-331JE	1	435033314R1
R4005	CHIP TYPE CARBON RESISTOR	RN72K1J-331JE	1	435033314R1
R4006	CHIP TYPE CARBON RESISTOR	RN72K1J-104JE	1	435031044R1
R4007	CHIP TYPE CARBON RESISTOR	RN72K1J-104JE	1	435031044R1
R4008	CHIP TYPE CARBON RESISTOR	RN72K1J-331JE	1	435033314R1
R4009	CHIP TYPE CARBON RESISTOR	RN72K1J-331JE	1	435033314R1
R4010	CHIP TYPE CARBON RESISTOR	RN72K1J-104JE	1	435031044R1
R4011	CHIP TYPE CARBON RESISTOR	RN72K1J-104JE	1	435031044R1
R4012	CHIP TYPE CARBON RESISTOR	RN72K1J-331JE	1	435033314R1
R4013	CHIP TYPE CARBON RESISTOR	RN72K1J-331JE	1	435033314R1
R4014	CHIP TYPE CARBON RESISTOR	RN72K1J-104JE	1	435031044R1
R4015	CHIP TYPE CARBON RESISTOR	RN72K1J-104JE	1	435031044R1
R4016	CHIP TYPE CARBON RESISTOR	RN72K1J-331JE	1	435033314R1
R4017	CHIP TYPE CARBON RESISTOR	RN72K1J-331JE	1	435033314R1
R4018	CHIP TYPE CARBON RESISTOR	RN72K1J-104JE	1	435031044R1
R4019	CHIP TYPE CARBON RESISTOR	RN72K1J-104JE	1	435031044R1
R4020	CHIP TYPE CARBON RESISTOR	RN72K1J-331JE	1	435033314R1
R4021	CHIP TYPE CARBON RESISTOR	RN72K1J-331JE	1	435033314R1
R4022	CHIP TYPE CARBON RESISTOR	RN72K1J-104JE	1	435031044R1
R4023	CHIP TYPE CARBON RESISTOR	RN72K1J-104JE	1	435031044R1
R4024	CHIP TYPE CARBON RESISTOR	RN72K1J-331JE	1	435033314R1
R4025	CHIP TYPE CARBON RESISTOR	RN72K1J-331JE	1	435033314R1
R4026	CHIP TYPE CARBON RESISTOR	RN72K1J-104JE	1	435031044R1
R4027	CHIP TYPE CARBON RESISTOR	RN72K1J-104JE	1	435031044R1
R4028	CHIP TYPE CARBON RESISTOR	RN72K1J-331JE	1	435033314R1
R4029	CHIP TYPE CARBON RESISTOR	RN72K1J-331JE	1	435033314R1
R4030	CHIP TYPE CARBON RESISTOR	RN72K1J-563JE	1	435035634R1
R4031	CHIP TYPE CARBON RESISTOR	RN72K1J-563JE	1	435035634R1
R4040	CHIP TYPE CARBON RESISTOR	RN72K1J-101JE	1	435031014R1
R4041	CHIP TYPE CARBON RESISTOR	RN72K1J-101JE	1	435031014R1
R4042	CHIP TYPE CARBON RESISTOR	RN72K1J-101JE	1	435031014R1
R4043	CHIP TYPE CARBON RESISTOR	RN72K1J-101JE	1	435031014R1
R4044	CHIP TYPE CARBON RESISTOR	RN72K1J-101JE	1	435031014R1
R4045	CHIP TYPE CARBON RESISTOR	RN72K1J-101JE	1	435031014R1
R4046	CHIP TYPE CARBON RESISTOR	RN72K1J-101JE	1	435031014R1
R4049	CHIP TYPE CARBON RESISTOR	RN72K1J-101JE	1	435031014R1

R4050	CHIP TYPE CARBON RESISTOR	RN72K1J-101JE	1	435031014R1
R4051	CHIP TYPE CARBON RESISTOR	RN72K1J-224JE	1	435032244R1
R4069	CHIP TYPE CARBON RESISTOR	RN72K1J-104JE	1	435031044R1
R4070	CHIP TYPE CARBON RESISTOR	RN72K1J-224JE	1	435032244R1
R4071	CHIP TYPE CARBON RESISTOR	RN72K1J-224JE	1	435032244R1
R4072	CHIP TYPE CARBON RESISTOR	RN72K1J-224JE	1	435032244R1
R4073	CHIP TYPE CARBON RESISTOR	RN72K1J-224JE	1	435032244R1
R4074	CHIP TYPE CARBON RESISTOR	RN72K1J-224JE	1	435032244R1
R4075	CHIP TYPE CARBON RESISTOR	RN72K1J-224JE	1	435032244R1
R4076	CHIP TYPE CARBON RESISTOR	RN72K1J-224JE	1	435032244R1
R4081	CHIP TYPE CARBON RESISTOR	RN72K1J-222JE	1	435032224R1
R4082	CHIP TYPE CARBON RESISTOR	RN72K1J-222JE	1	435032224R1
R4083	CHIP TYPE CARBON RESISTOR	RN72K1J-222JE	1	435032224R1
R4084	CHIP TYPE CARBON RESISTOR	RN72K1J-222JE	1	435032224R1
R4085	CHIP TYPE CARBON RESISTOR	RN72K1J-222JE	1	435032224R1
R4086	CHIP TYPE CARBON RESISTOR	RN72K1J-222JE	1	435032224R1
R4087	CHIP TYPE CARBON RESISTOR	RN72K1J-104JE	1	435031044R1
R4090	CHIP TYPE CARBON RESISTOR	RN72K1J-123JE	1	435031234R1
R4091	CHIP TYPE CARBON RESISTOR	RN72K1J-223JE	1	435032234R1
R4092	CHIP TYPE CARBON RESISTOR	RN72K1J-331JE	1	435033314R1
R4093	CHIP TYPE CARBON RESISTOR	RN72K1J-332JE	1	435033324R1
R4094	CHIP TYPE CARBON RESISTOR	RN72K1J-103JE	1	435031034R1
R4095	CHIP TYPE CARBON RESISTOR	RN72K1J-103JE	1	435031034R1
R4096	CHIP TYPE CARBON RESISTOR	RN72K1J-331JE	1	435033314R1
R4097	CHIP TYPE CARBON RESISTOR	RN72K1J-332JE	1	435033324R1
R4098	CHIP TYPE CARBON RESISTOR	RN72K1J-123JE	1	435031234R1
R4099	CHIP TYPE CARBON RESISTOR	RN72K1J-223JE	1	435032234R1
R4100	CHIP TYPE CARBON RESISTOR	RN72K1J-224JE	1	435032244R1
R4101	CHIP TYPE CARBON RESISTOR	RN72K1J-224JE	1	435032244R1
R4102	CHIP TYPE CARBON RESISTOR	RN72K1J-224JE	1	435032244R1
R4103	CHIP TYPE CARBON RESISTOR	RN72K1J-224JE	1	435032244R1
R4104	CHIP TYPE CARBON RESISTOR	RN72K1J-224JE	1	435032244R1
R4105	CHIP TYPE CARBON RESISTOR	RN72K1J-224JE	1	435032244R1
R4106	CHIP TYPE CARBON RESISTOR	RN72K1J-224JE	1	435032244R1
R4107	CHIP TYPE CARBON RESISTOR	RN72K1J-223JE	1	435032234R1
R4108	CHIP TYPE CARBON RESISTOR	RN72K1J-224JE	1	435032244R1
R4109	CHIP TYPE CARBON RESISTOR	RN72K1J-224JE	1	435032244R1
R4110	CHIP TYPE CARBON RESISTOR	RN72K1J-121JE	1	435031214R1
R4111	CHIP TYPE CARBON RESISTOR	RN72K1J-121JE	1	435031214R1
R4112	CHIP TYPE CARBON RESISTOR	RN72K1J-121JE	1	435031214R1
R4113	CHIP TYPE CARBON RESISTOR	RN72K1J-121JE	1	435031214R1
R4114	CHIP TYPE CARBON RESISTOR	RN72K1J-121JE	1	435031214R1
R4115	CHIP TYPE CARBON RESISTOR	RN72K1J-121JE	1	435031214R1
R4116	CHIP TYPE CARBON RESISTOR	RN72K1J-121JE	1	435031214R1
R4117	CHIP TYPE CARBON RESISTOR	RN72K1J-271JE	1	435032714R1
R4120	CHIP TYPE CARBON RESISTOR	RN72K1J-101JE	1	435031014R1
R4121	CHIP TYPE CARBON RESISTOR	RN72K1J-101JE	1	435031014R1
R4122	CHIP TYPE CARBON RESISTOR	RN72K1J-101JE	1	435031014R1
R4123	CHIP TYPE CARBON RESISTOR	RN72K1J-101JE	1	435031014R1
R4124	CHIP TYPE CARBON RESISTOR	RN72K1J-101JE	1	435031014R1
R4125	CHIP TYPE CARBON RESISTOR	RN72K1J-101JE	1	435031014R1
R4126	CHIP TYPE CARBON RESISTOR	RN72K1J-101JE	1	435031014R1
R4127	CHIP TYPE CARBON RESISTOR	RN72K1J-101JE	1	435031014R1
R4128	CHIP TYPE CARBON RESISTOR	RN72K1J-220JE	1	435032204R1
R4130	CHIP TYPE CARBON RESISTOR	RN72K1J-221JE	1	435032214R1
R4131	CHIP TYPE CARBON RESISTOR	RN72K1J-473JE	1	435034734R1
R4132	CHIP TYPE CARBON RESISTOR	RN72K1J-153JE	1	435031534R1
R4133	CHIP TYPE CARBON RESISTOR	RN72K1J-122JE	1	435031224R1
R4134	CHIP TYPE CARBON RESISTOR	RN72K1J-103JE	1	435031034R1
R4140	CHIP TYPE CARBON RESISTOR	RN72K1J-000JE	1	435030004R1
R4141	CHIP TYPE CARBON RESISTOR	RN72K1J-000JE	1	435030004R1
R4142	CHIP TYPE CARBON RESISTOR	RN72K1J-000JE	1	435030004R1
R4143	CHIP TYPE CARBON RESISTOR	RN72K1J-000JE	1	435030004R1
R4144	CHIP TYPE CARBON RESISTOR	RN72K1J-000JE	1	435030004R1
R4145	CHIP TYPE CARBON RESISTOR	RN72K1J-000JE	1	435030004R1
R4150	CHIP TYPE CARBON RESISTOR	RN72K1J-000JE	1	435030004R1
R4151	CHIP TYPE CARBON RESISTOR	RN72K1J-000JE	1	435030004R1

R4152	CHIP TYPE CARBON RESISTOR	RN72K1J-000JE	1	435030004R1
R4153	CHIP TYPE CARBON RESISTOR	RN72K1J-000JE	1	435030004R1
R4154	CHIP TYPE CARBON RESISTOR	RN72K1J-000JE	1	435030004R1
R4155	CHIP TYPE CARBON RESISTOR	RN72K1J-000JE	1	435030004R1
R4156	CHIP TYPE CARBON RESISTOR	RN72K1J-000JE	1	435030004R1
R4160	METAL RESISTOR	RNU1WCJ-2.2	1	453630224T
R4161	METAL RESISTOR	RNU1WCJ-2.2	1	453630224T
R4162	METAL RESISTOR	RNU1WCJ-2.2	1	453630224T
R4163	METAL RESISTOR	RNU1WCJ-2.2	1	453630224T
R4166	CHIP TYPE CARBON RESISTOR	RN72K1J-220JE	1	435032204R1
R4167	CHIP TYPE CARBON RESISTOR	RN72K1J-220JE	1	435032204R1
R4168	CHIP TYPE CARBON RESISTOR	RN72K1J-220JE	1	435032204R1
R4170	METAL RESISTOR	RNU1WCJ-2.2	1	453630224T
R4171	METAL OXIDE FILM RESISTOR	RS1WBJ-10	1	443621004T
R4174	METAL OXIDE FILM RESISTOR	RS1WBJ-15	1	443621504T
R4175	METAL OXIDE FILM RESISTOR	RS1WBJ-15	1	443621504T
R4176	METAL OXIDE FILM RESISTOR	RS1WBJ-15	1	443621504T
R4177	METAL OXIDE FILM RESISTOR	RS1WBJ-15	1	443621504T
R4180	CHIP TYPE CARBON RESISTOR	RN72K1J-224JE	1	435032244R1
R4181	CHIP TYPE CARBON RESISTOR	RN72K1J-224JE	1	435032244R1
R4182	CHIP TYPE CARBON RESISTOR	RN72K1J-224JE	1	435032244R1
R4183	CHIP TYPE CARBON RESISTOR	RN72K1J-471JE	1	435034714R1
R4184	CHIP TYPE CARBON RESISTOR	RN72K1J-471JE	1	435034714R1
R4185	CHIP TYPE CARBON RESISTOR	RN72K1J-224JE	1	435032244R1
R4186	CHIP TYPE CARBON RESISTOR	RN72K1J-471JE	1	435034714R1
R4187	CHIP TYPE CARBON RESISTOR	RN72K1J-471JE	1	435034714R1
R4189	CHIP TYPE CARBON RESISTOR	RN72K1J-224JE	1	435032244R1
R4190	CHIP TYPE CARBON RESISTOR	RN72K1J-224JE	1	435032244R1
R4197	METAL OXIDE FILM RESISTOR	RS1WBJ-15	1	443621504T
R4198	METAL OXIDE FILM RESISTOR	RS1WBJ-15	1	443621504T
R4200	CHIP TYPE CARBON RESISTOR	RN72K1J-102JE	1	435031024R1
R4201	CHIP TYPE CARBON RESISTOR	RN72K1J-104JE	1	435031044R1
R4202	CHIP TYPE CARBON RESISTOR	RN72K1J-104JE	1	435031044R1
R4203	CHIP TYPE CARBON RESISTOR	RN72K1J-104JE	1	435031044R1
R4204	CHIP TYPE CARBON RESISTOR	RN72K1J-104JE	1	435031044R1
R4205	CHIP TYPE CARBON RESISTOR	RN72K1J-104JE	1	435031044R1
R4206	CHIP TYPE CARBON RESISTOR	RN72K1J-104JE	1	435031044R1
R4207	CHIP TYPE CARBON RESISTOR	RN72K1J-104JE	1	435031044R1
R4208	CHIP TYPE CARBON RESISTOR	RN72K1J-104JE	1	435031044R1
R4209	CHIP TYPE CARBON RESISTOR	RN72K1J-104JE	1	435031044R1
R4210	CHIP TYPE CARBON RESISTOR	RN72K1J-104JE	1	435031044R1
R4222	CHIP TYPE CARBON RESISTOR	RN72K1J-121JE	1	435031214R1
R4223	CHIP TYPE CARBON RESISTOR	RN72K1J-121JE	1	435031214R1
R4224	CHIP TYPE CARBON RESISTOR	RN72K1J-121JE	1	435031214R1
R4232	CHIP TYPE CARBON RESISTOR	RN72K1J-101JE	1	435031014R1
R4233	CHIP TYPE CARBON RESISTOR	RN72K1J-101JE	1	435031014R1
R4234	CHIP TYPE CARBON RESISTOR	RN72K1J-101JE	1	435031014R1
R4301	CHIP TYPE CARBON RESISTOR	RN72K1J-472JE	1	435034724R1
R4302	CHIP TYPE CARBON RESISTOR	RN72K1J-472JE	1	435034724R1
R4304	CHIP TYPE CARBON RESISTOR	RN72K1J-101JE	1	435031014R1
R4305	CHIP TYPE CARBON RESISTOR	RN72K1J-101JE	1	435031014R1
R4308	CHIP TYPE CARBON RESISTOR	RN72K1J-222JE	1	435032224R1
R4309	CHIP TYPE CARBON RESISTOR	RN72K1J-222JE	1	435032224R1
R4310	CHIP TYPE CARBON RESISTOR	RN72K1J-224JE	1	435032244R1
R4311	CHIP TYPE CARBON RESISTOR	RN72K1J-224JE	1	435032244R1
R4326	CHIP TYPE CARBON RESISTOR	RN72K1J-100JE	1	435031004R1
R4327	CHIP TYPE CARBON RESISTOR	RN72K1J-100JE	1	435031004R1
R4400	CHIP TYPE CARBON RESISTOR	RN72K1J-102JE	1	435031024R1
R4401	CHIP TYPE CARBON RESISTOR	RN72K1J-102JE	1	435031024R1
R4402	CHIP TYPE CARBON RESISTOR	RN72K1J-224JE	1	435032244R1
R4403	CHIP TYPE CARBON RESISTOR	RN72K1J-224JE	1	435032244R1
R4530	CHIP TYPE CARBON RESISTOR	RN72K1J-224JE	1	435032244R1
R4531	CHIP TYPE CARBON RESISTOR	RN72K1J-224JE	1	435032244R1
R4532	CHIP TYPE CARBON RESISTOR	RN72K1J-561JE	1	435035614R1
R4533	CHIP TYPE CARBON RESISTOR	RN72K1J-561JE	1	435035614R1
R4534	CHIP TYPE CARBON RESISTOR	RN72K1J-274JE	1	435032744R1
R4535	CHIP TYPE CARBON RESISTOR	RN72K1J-274JE	1	435032744R1

R4536	CHIP TYPE CARBON RESISTOR	RN72K1J-223JE	1	435032234R1
R4537	CHIP TYPE CARBON RESISTOR	RN72K1J-223JE	1	435032234R1
R4538	CHIP TYPE CARBON RESISTOR	RN72K1J-122JE	1	435031224R1
R4539	CHIP TYPE CARBON RESISTOR	RN72K1J-122JE	1	435031224R1
R4540	CHIP TYPE CARBON RESISTOR	RN72K1J-101JE	1	435031014R1
R4541	CHIP TYPE CARBON RESISTOR	RN72K1J-101JE	1	435031014R1
R4542	CHIP TYPE CARBON RESISTOR	RN72K1J-224JE	1	435032244R1
R4543	CHIP TYPE CARBON RESISTOR	RN72K1J-224JE	1	435032244R1
R4544	CHIP TYPE CARBON RESISTOR	RN72K1J-181JE	1	435031814R1
R4545	CHIP TYPE CARBON RESISTOR	RN72K1J-181JE	1	435031814R1
R4548	CHIP TYPE CARBON RESISTOR	RN72K1J-181JE	1	435031814R1
R4549	CHIP TYPE CARBON RESISTOR	RN72K1J-181JE	1	435031814R1
R4550	CHIP TYPE CARBON RESISTOR	RN72K1J-181JE	1	435031814R1
R4551	CHIP TYPE CARBON RESISTOR	RN72K1J-181JE	1	435031814R1
R4608	CHIP TYPE CARBON RESISTOR	RN72K1J-000JE	1	435030004R1
R4610	CHIP TYPE CARBON RESISTOR	RN72K1J-000JE	1	435030004R1
R5003	CHIP TYPE CARBON RESISTOR	RN72K1J-222JE	1	435032224R1
R5004	CHIP TYPE CARBON RESISTOR	RN72K1J-222JE	1	435032224R1
R5005	CHIP TYPE CARBON RESISTOR	RN72K1J-222JE	1	435032224R1
R5006	CHIP TYPE CARBON RESISTOR	RN72K1J-222JE	1	435032224R1
R5013	CHIP TYPE CARBON RESISTOR	RN72K1J-563JE	1	435035634R1
R5014	CHIP TYPE CARBON RESISTOR	RN72K1J-563JE	1	435035634R1
R5015	CHIP TYPE CARBON RESISTOR	RN72K1J-563JE	1	435035634R1
R5016	CHIP TYPE CARBON RESISTOR	RN72K1J-563JE	1	435035634R1
R5023	CHIP TYPE CARBON RESISTOR	RN72K1J-331JE	1	435033314R1
R5024	CHIP TYPE CARBON RESISTOR	RN72K1J-331JE	1	435033314R1
R5025	CHIP TYPE CARBON RESISTOR	RN72K1J-331JE	1	435033314R1
R5026	CHIP TYPE CARBON RESISTOR	RN72K1J-331JE	1	435033314R1
R5033	NON-FLAMMABLE CARBON FILM RESISTOR	R25J-56K	1	415475634T
R5034	NON-FLAMMABLE CARBON FILM RESISTOR	R25J-56K	1	415475634T
R5035	NON-FLAMMABLE CARBON FILM RESISTOR	R25J-56K	1	415475634T
R5036	NON-FLAMMABLE CARBON FILM RESISTOR	R25J-56K	1	415475634T
R5043	CHIP TYPE CARBON RESISTOR	RN72K1J-182JE	1	435031824R1
R5044	CHIP TYPE CARBON RESISTOR	RN72K1J-182JE	1	435031824R1
R5045	CHIP TYPE CARBON RESISTOR	RN72K1J-182JE	1	435031824R1
R5046	CHIP TYPE CARBON RESISTOR	RN72K1J-182JE	1	435031824R1
R5053	CHIP TYPE CARBON RESISTOR	RN72K1J-562JE	1	435035624R1
R5054	CHIP TYPE CARBON RESISTOR	RN72K1J-562JE	1	435035624R1
R5055	CHIP TYPE CARBON RESISTOR	RN72K1J-562JE	1	435035624R1
R5056	CHIP TYPE CARBON RESISTOR	RN72K1J-562JE	1	435035624R1
R5063	CHIP TYPE CARBON RESISTOR	RN72K1J-182JE	1	435031824R1
R5064	CHIP TYPE CARBON RESISTOR	RN72K1J-182JE	1	435031824R1
R5065	CHIP TYPE CARBON RESISTOR	RN72K1J-182JE	1	435031824R1
R5066	CHIP TYPE CARBON RESISTOR	RN72K1J-182JE	1	435031824R1
R5073	CHIP TYPE CARBON RESISTOR	RN72K1J-152JE	1	435031524R1
R5074	CHIP TYPE CARBON RESISTOR	RN72K1J-152JE	1	435031524R1
R5075	CHIP TYPE CARBON RESISTOR	RN72K1J-152JE	1	435031524R1
R5076	CHIP TYPE CARBON RESISTOR	RN72K1J-152JE	1	435031524R1
R5083	CHIP TYPE CARBON RESISTOR	RN72K1J-152JE	1	435031524R1
R5084	CHIP TYPE CARBON RESISTOR	RN72K1J-152JE	1	435031524R1
R5085	CHIP TYPE CARBON RESISTOR	RN72K1J-152JE	1	435031524R1
R5086	CHIP TYPE CARBON RESISTOR	RN72K1J-152JE	1	435031524R1
R5093	METAL OXIDE FILM RESISTOR	RS1/2WBJ-100K	1	443521044T
R5094	METAL OXIDE FILM RESISTOR	RS1/2WBJ-100K	1	443521044T
R5095	METAL OXIDE FILM RESISTOR	RS1/2WBJ-100K	1	443521044T
R5096	METAL OXIDE FILM RESISTOR	RS1/2WBJ-100K	1	443521044T
R5103	CHIP TYPE CARBON RESISTOR	RN72K1J-104JE	1	435031044R1
R5104	CHIP TYPE CARBON RESISTOR	RN72K1J-104JE	1	435031044R1
R5105	CHIP TYPE CARBON RESISTOR	RN72K1J-104JE	1	435031044R1
R5106	CHIP TYPE CARBON RESISTOR	RN72K1J-104JE	1	435031044R1
R5113	CHIP TYPE CARBON RESISTOR	RN72K1J-152JE	1	435031524R1
R5114	CHIP TYPE CARBON RESISTOR	RN72K1J-152JE	1	435031524R1
R5115	CHIP TYPE CARBON RESISTOR	RN72K1J-152JE	1	435031524R1
R5116	CHIP TYPE CARBON RESISTOR	RN72K1J-152JE	1	435031524R1
R5123	NON-FLAMMABLE CARBON FILM RESISTOR	R25J-39K	1	415473934T
R5124	NON-FLAMMABLE CARBON FILM RESISTOR	R25J-39K	1	415473934T
R5125	NON-FLAMMABLE CARBON FILM RESISTOR	R25J-39K	1	415473934T

R5126	NON-FLAMMABLE CARBON FILM RESISTOR	R25J-39K	1	415473934T
R5133	NON-FLAMMABLE CARBON FILM RESISTOR	R25J-39K	1	415473934T
R5134	NON-FLAMMABLE CARBON FILM RESISTOR	R25J-39K	1	415473934T
R5135	NON-FLAMMABLE CARBON FILM RESISTOR	R25J-39K	1	415473934T
R5136	NON-FLAMMABLE CARBON FILM RESISTOR	R25J-39K	1	415473934T
R5163	NON-FLAMMABLE CARBON FILM RESISTOR	R25J-220	1	415472214T
R5164	NON-FLAMMABLE CARBON FILM RESISTOR	R25J-220	1	415472214T
R5165	NON-FLAMMABLE CARBON FILM RESISTOR	R25J-220	1	415472214T
R5166	NON-FLAMMABLE CARBON FILM RESISTOR	R25J-220	1	415472214T
R5173	NON-FLAMMABLE CARBON FILM RESISTOR	R25J-220	1	415472214T
R5174	NON-FLAMMABLE CARBON FILM RESISTOR	R25J-220	1	415472214T
R5175	NON-FLAMMABLE CARBON FILM RESISTOR	R25J-220	1	415472214T
R5176	NON-FLAMMABLE CARBON FILM RESISTOR	R25J-220	1	415472214T
R5183	NON-FLAMMABLE CARBON FILM RESISTOR	R25J-10	1	415471004T
R5184	NON-FLAMMABLE CARBON FILM RESISTOR	R25J-10	1	415471004T
R5185	NON-FLAMMABLE CARBON FILM RESISTOR	R25J-10	1	415471004T
R5186	NON-FLAMMABLE CARBON FILM RESISTOR	R25J-10	1	415471004T
R5193	NON-FLAMMABLE CARBON FILM RESISTOR	R25J-10	1	415471004T
R5194	NON-FLAMMABLE CARBON FILM RESISTOR	R25J-10	1	415471004T
R5195	NON-FLAMMABLE CARBON FILM RESISTOR	R25J-10	1	415471004T
R5196	NON-FLAMMABLE CARBON FILM RESISTOR	R25J-10	1	415471004T
R5303	CHIP TYPE CARBON RESISTOR	RN72K1J-330JE	1	435033304R1
R5304	CHIP TYPE CARBON RESISTOR	RN72K1J-330JE	1	435033304R1
R5305	CHIP TYPE CARBON RESISTOR	RN72K1J-330JE	1	435033304R1
R5306	CHIP TYPE CARBON RESISTOR	RN72K1J-330JE	1	435033304R1
R5313	CHIP TYPE CARBON RESISTOR	RN72K1J-330JE	1	435033304R1
R5314	CHIP TYPE CARBON RESISTOR	RN72K1J-330JE	1	435033304R1
R5315	CHIP TYPE CARBON RESISTOR	RN72K1J-330JE	1	435033304R1
R5316	CHIP TYPE CARBON RESISTOR	RN72K1J-330JE	1	435033304R1
R5393	CHIP TYPE CARBON RESISTOR	RN72K1J-182FE	1	435031822R1
R5394	CHIP TYPE CARBON RESISTOR	RN72K1J-152FE	1	435031522R1
R5395	CHIP TYPE CARBON RESISTOR	RN72K1J-152FE	1	435031522R1
R5396	CHIP TYPE CARBON RESISTOR	RN72K1J-152FE	1	435031522R1
R6000	CHIP TYPE CARBON RESISTOR	RN72K1J-104FE	1	435031042R1
R6001	CHIP TYPE CARBON RESISTOR	RN72K1J-104FE	1	435031042R1
R6002	CHIP TYPE CARBON RESISTOR	RN72K1J-104FE	1	435031042R1
R6003	CHIP TYPE CARBON RESISTOR	RN72K1J-104FE	1	435031042R1
R6004	CHIP TYPE CARBON RESISTOR	RN72K1J-104FE	1	435031042R1
R6005	CHIP TYPE CARBON RESISTOR	RN72K1J-104FE	1	435031042R1
R6006	CHIP TYPE CARBON RESISTOR	RN72K1J-104FE	1	435031042R1
R6010	CHIP TYPE CARBON RESISTOR	RN72K1J-104FE	1	435031042R1
R6011	CHIP TYPE CARBON RESISTOR	RN72K1J-104FE	1	435031042R1
R6012	CHIP TYPE CARBON RESISTOR	RN72K1J-104FE	1	435031042R1
R6013	CHIP TYPE CARBON RESISTOR	RN72K1J-104FE	1	435031042R1
R6014	CHIP TYPE CARBON RESISTOR	RN72K1J-104FE	1	435031042R1
R6015	CHIP TYPE CARBON RESISTOR	RN72K1J-104FE	1	435031042R1
R6016	CHIP TYPE CARBON RESISTOR	RN72K1J-104FE	1	435031042R1
R6023	NON-FLAMMABLE CARBON FILM RESISTOR	R25J-2.2	1	415470224T
R6024	NON-FLAMMABLE CARBON FILM RESISTOR	R25J-2.2	1	415470224T
R6025	NON-FLAMMABLE CARBON FILM RESISTOR	R25J-2.2	1	415470224T
R6026	NON-FLAMMABLE CARBON FILM RESISTOR	R25J-2.2	1	415470224T
R6033	CHIP TYPE CARBON RESISTOR	RN72K1J-152FE	1	435031522R1
R6034	CHIP TYPE CARBON RESISTOR	RN72K1J-152FE	1	435031522R1
R6035	CHIP TYPE CARBON RESISTOR	RN72K1J-152FE	1	435031522R1
R6036	CHIP TYPE CARBON RESISTOR	RN72K1J-152FE	1	435031522R1
R6053	CHIP TYPE CARBON RESISTOR	RN72K1J-000JE	1	435030004R1
R6054	CHIP TYPE CARBON RESISTOR	RN72K1J-000JE	1	435030004R1
R6055	CHIP TYPE CARBON RESISTOR	RN72K1J-000JE	1	435030004R1
R6056	CHIP TYPE CARBON RESISTOR	RN72K1J-000JE	1	435030004R1
R6063	CHIP TYPE CARBON RESISTOR	RN72K1J-152FE	1	435031522R1
R6064	CHIP TYPE CARBON RESISTOR	RN72K1J-152FE	1	435031522R1
R6065	CHIP TYPE CARBON RESISTOR	RN72K1J-152FE	1	435031522R1
R6066	CHIP TYPE CARBON RESISTOR	RN72K1J-152FE	1	435031522R1
R6073	NON-FLAMMABLE CARBON FILM RESISTOR	R25J-150	1	415471514T
R6074	NON-FLAMMABLE CARBON FILM RESISTOR	R25J-150	1	415471514T
R6075	NON-FLAMMABLE CARBON FILM RESISTOR	R25J-150	1	415471514T
R6076	NON-FLAMMABLE CARBON FILM RESISTOR	R25J-150	1	415471514T

R6080	NON-FLAMMABLE CARBON FILM RESISTOR	R25J-0.22	1	415472294T
R6081	NON-FLAMMABLE CARBON FILM RESISTOR	R25J-0.22	1	415472294T
R6082	NON-FLAMMABLE CARBON FILM RESISTOR	R25J-0.22	1	415472294T
R6083	NON-FLAMMABLE CARBON FILM RESISTOR	R25J-0.22	1	415472294T
R6084	NON-FLAMMABLE CARBON FILM RESISTOR	R25J-0.22	1	415472294T
R6085	NON-FLAMMABLE CARBON FILM RESISTOR	R25J-0.22	1	415472294T
R6086	NON-FLAMMABLE CARBON FILM RESISTOR	R25J-0.22	1	415472294T
R6090	NON-FLAMMABLE CARBON FILM RESISTOR	R25J-0.22	1	415472294T
R6091	NON-FLAMMABLE CARBON FILM RESISTOR	R25J-0.22	1	415472294T
R6092	NON-FLAMMABLE CARBON FILM RESISTOR	R25J-0.22	1	415472294T
R6093	NON-FLAMMABLE CARBON FILM RESISTOR	R25J-0.22	1	415472294T
R6094	NON-FLAMMABLE CARBON FILM RESISTOR	R25J-0.22	1	415472294T
R6095	NON-FLAMMABLE CARBON FILM RESISTOR	R25J-0.22	1	415472294T
R6096	NON-FLAMMABLE CARBON FILM RESISTOR	R25J-0.22	1	415472294T
R6100	METAL PLATE RESISTOR	MPR5W+5W 0R22	1	4000233
R6101	METAL PLATE RESISTOR	MPR5W+5W 0R22	1	4000233
R6102	METAL PLATE RESISTOR	MPR5W+5W 0R22	1	4000233
R6113	METAL OXIDE FILM RESISTOR	RS2WBJ-0.22	1	442722294T
R6114	METAL OXIDE FILM RESISTOR	RS2WBJ-0.22	1	442722294T
R6115	METAL OXIDE FILM RESISTOR	RS2WBJ-0.22	1	442722294T
R6116	METAL OXIDE FILM RESISTOR	RS2WBJ-0.22	1	442722294T
R6123	METAL OXIDE FILM RESISTOR	RS2WBJ-0.22	1	442722294T
R6124	METAL OXIDE FILM RESISTOR	RS2WBJ-0.22	1	442722294T
R6125	METAL OXIDE FILM RESISTOR	RS2WBJ-0.22	1	442722294T
R6126	METAL OXIDE FILM RESISTOR	RS2WBJ-0.22	1	442722294T
R6130	CHIP TYPE CARBON RESISTOR	RN72K1J-223JE	1	435032234R1
R6131	CHIP TYPE CARBON RESISTOR	RN72K1J-223JE	1	435032234R1
R6132	CHIP TYPE CARBON RESISTOR	RN72K1J-223JE	1	435032234R1
R6133	CHIP TYPE CARBON RESISTOR	RN72K1J-223JE	1	435032234R1
R6134	CHIP TYPE CARBON RESISTOR	RN72K1J-223JE	1	435032234R1
R6135	CHIP TYPE CARBON RESISTOR	RN72K1J-223JE	1	435032234R1
R6136	CHIP TYPE CARBON RESISTOR	RN72K1J-223JE	1	435032234R1
R6140	CHIP TYPE CARBON RESISTOR	RN72K1J-223JE	1	435032234R1
R6141	CHIP TYPE CARBON RESISTOR	RN72K1J-223JE	1	435032234R1
R6142	CHIP TYPE CARBON RESISTOR	RN72K1J-223JE	1	435032234R1
R6143	CHIP TYPE CARBON RESISTOR	RN72K1J-223JE	1	435032234R1
R6144	CHIP TYPE CARBON RESISTOR	RN72K1J-223JE	1	435032234R1
R6145	CHIP TYPE CARBON RESISTOR	RN72K1J-223JE	1	435032234R1
R6146	CHIP TYPE CARBON RESISTOR	RN72K1J-223JE	1	435032234R1
R6150	CHIP TYPE CARBON RESISTOR	RN72K1J-222JE	1	435032224R1
R6151	CHIP TYPE CARBON RESISTOR	RN72K1J-222JE	1	435032224R1
R6152	CHIP TYPE CARBON RESISTOR	RN72K1J-222JE	1	435032224R1
R6153	CHIP TYPE CARBON RESISTOR	RN72K1J-222JE	1	435032224R1
R6154	CHIP TYPE CARBON RESISTOR	RN72K1J-222JE	1	435032224R1
R6155	CHIP TYPE CARBON RESISTOR	RN72K1J-222JE	1	435032224R1
R6156	CHIP TYPE CARBON RESISTOR	RN72K1J-222JE	1	435032224R1
R6160	CHIP TYPE CARBON RESISTOR	RN72K1J-333JE	1	435033334R1
R6161	CHIP TYPE CARBON RESISTOR	RN72K1J-333JE	1	435033334R1
R6162	CHIP TYPE CARBON RESISTOR	RN72K1J-333JE	1	435033334R1
R6163	CHIP TYPE CARBON RESISTOR	RN72K1J-333JE	1	435033334R1
R6164	CHIP TYPE CARBON RESISTOR	RN72K1J-333JE	1	435033334R1
R6165	CHIP TYPE CARBON RESISTOR	RN72K1J-333JE	1	435033334R1
R6166	CHIP TYPE CARBON RESISTOR	RN72K1J-333JE	1	435033334R1
R6170	CHIP TYPE CARBON RESISTOR	RN72K1J-473JE	1	435034734R1
R6171	CHIP TYPE CARBON RESISTOR	RN72K1J-473JE	1	435034734R1
R6172	CHIP TYPE CARBON RESISTOR	RN72K1J-473JE	1	435034734R1
R6173	CHIP TYPE CARBON RESISTOR	RN72K1J-473JE	1	435034734R1
R6174	CHIP TYPE CARBON RESISTOR	RN72K1J-473JE	1	435034734R1
R6175	CHIP TYPE CARBON RESISTOR	RN72K1J-473JE	1	435034734R1
R6176	CHIP TYPE CARBON RESISTOR	RN72K1J-473JE	1	435034734R1
R6180	CHIP TYPE CARBON RESISTOR	RN72K1J-473JE	1	435034734R1
R6181	CHIP TYPE CARBON RESISTOR	RN72K1J-473JE	1	435034734R1
R6182	CHIP TYPE CARBON RESISTOR	RN72K1J-473JE	1	435034734R1
R6183	CHIP TYPE CARBON RESISTOR	RN72K1J-473JE	1	435034734R1
R6184	CHIP TYPE CARBON RESISTOR	RN72K1J-473JE	1	435034734R1
R6185	CHIP TYPE CARBON RESISTOR	RN72K1J-473JE	1	435034734R1
R6186	CHIP TYPE CARBON RESISTOR	RN72K1J-473JE	1	435034734R1

R6190	CHIP TYPE CARBON RESISTOR	RN72K1J-394JE	1	435033944R1	
R6191	CHIP TYPE CARBON RESISTOR	RN72K1J-394JE	1	435033944R1	
R6192	CHIP TYPE CARBON RESISTOR	RN72K1J-394JE	1	435033944R1	
R6193	CHIP TYPE CARBON RESISTOR	RN72K1J-394JE	1	435033944R1	
R6194	CHIP TYPE CARBON RESISTOR	RN72K1J-394JE	1	435033944R1	
R6195	CHIP TYPE CARBON RESISTOR	RN72K1J-394JE	1	435033944R1	
R6196	CHIP TYPE CARBON RESISTOR	RN72K1J-394JE	1	435033944R1	
R6220	CHIP TYPE CARBON RESISTOR	RN72K1J-220FE	1	435032202R1	
R6221	CHIP TYPE CARBON RESISTOR	RN72K1J-220FE	1	435032202R1	
R6222	CHIP TYPE CARBON RESISTOR	RN72K1J-220FE	1	435032202R1	
R6223	CHIP TYPE CARBON RESISTOR	RN72K1J-220FE	1	435032202R1	
R6224	CHIP TYPE CARBON RESISTOR	RN72K1J-220FE	1	435032202R1	
R6225	CHIP TYPE CARBON RESISTOR	RN72K1J-220FE	1	435032202R1	
R6226	CHIP TYPE CARBON RESISTOR	RN72K1J-220FE	1	435032202R1	
R6230	CHIP TYPE CARBON RESISTOR	RN72K1J-000JE	1	435030004R1	
R6231	CHIP TYPE CARBON RESISTOR	RN72K1J-000JE	1	435030004R1	
R6232	CHIP TYPE CARBON RESISTOR	RN72K1J-000JE	1	435030004R1	
R6233	CHIP TYPE CARBON RESISTOR	RN72K1J-000JE	1	435030004R1	
R6234	CHIP TYPE CARBON RESISTOR	RN72K1J-000JE	1	435030004R1	
R6235	CHIP TYPE CARBON RESISTOR	RN72K1J-000JE	1	435030004R1	
R6236	CHIP TYPE CARBON RESISTOR	RN72K1J-000JE	1	435030004R1	
R6240	CHIP TYPE CARBON RESISTOR	RN72K1J-472FE	1	435034722R1	
R6241	CHIP TYPE CARBON RESISTOR	RN72K1J-472FE	1	435034722R1	
R6242	CHIP TYPE CARBON RESISTOR	RN72K1J-472FE	1	435034722R1	
R6243	CHIP TYPE CARBON RESISTOR	RN72K1J-472FE	1	435034722R1	
R6244	CHIP TYPE CARBON RESISTOR	RN72K1J-472FE	1	435034722R1	
R6245	CHIP TYPE CARBON RESISTOR	RN72K1J-472FE	1	435034722R1	
R6246	CHIP TYPE CARBON RESISTOR	RN72K1J-472FE	1	435034722R1	
R6250	CHIP TYPE CARBON RESISTOR	RN72K1J-000JE	1	435030004R1	
R6251	CHIP TYPE CARBON RESISTOR	RN72K1J-000JE	1	435030004R1	
R6252	CHIP TYPE CARBON RESISTOR	RN72K1J-000JE	1	435030004R1	
R6253	CHIP TYPE CARBON RESISTOR	RN72K1J-000JE	1	435030004R1	
R6254	CHIP TYPE CARBON RESISTOR	RN72K1J-000JE	1	435030004R1	
R6255	CHIP TYPE CARBON RESISTOR	RN72K1J-000JE	1	435030004R1	
R6256	CHIP TYPE CARBON RESISTOR	RN72K1J-000JE	1	435030004R1	
R6302	CHIP TYPE CARBON RESISTOR	RN72K1J-000JE	1	435030004R1	
R6303	CHIP TYPE CARBON RESISTOR	RN72K1J-000JE	1	435030004R1	
R6304	CHIP TYPE CARBON RESISTOR	RN72K1J-000JE	1	435030004R1	
R6305	CHIP TYPE CARBON RESISTOR	RN72K1J-000JE	1	435030004R1	
R6401	METAL RESISTOR	RNU1/2WCJ-0.1	1	453531094T	
R6402	CHIP TYPE CARBON RESISTOR	RN72K1J-102JE	1	435031024R1	
R6403	CHIP TYPE CARBON RESISTOR	RN72K1J-473JE	1	435034734R1	
R6406	METAL OXIDE FILM RESISTOR	RS1/2WBJ-33	1	443523304T	
R6451	CHIP TYPE CARBON RESISTOR	RN72K1J-333JE	1	435033334R1	
R6452	CHIP TYPE CARBON RESISTOR	RN72K1J-103JE	1	435031034R1	
R6453	CHIP TYPE CARBON RESISTOR	RN72K1J-223JE	1	435032234R1	
R6454	CHIP TYPE CARBON RESISTOR	RN72K1J-473JE	1	435034734R1	
R6455	CHIP TYPE CARBON RESISTOR	RN72K1J-103JE	1	435031034R1	
R6456	CHIP TYPE CARBON RESISTOR	RN72K1J-224JE	1	435032244R1	
R6457	CHIP TYPE CARBON RESISTOR	RN72K1J-223JE	1	435032234R1	
R6458	CHIP TYPE CARBON RESISTOR	RN72K1J-562JE	1	435035624R1	
R6459	CHIP TYPE CARBON RESISTOR	RN72K1J-562JE	1	435035624R1	
R6460	CHIP TYPE CARBON RESISTOR	RN72K1J-333JE	1	435033334R1	
R6461	CHIP TYPE CARBON RESISTOR	RN72K1J-222JE	1	435032224R1	
R6462	CHIP TYPE CARBON RESISTOR	RN72K1J-473JE	1	435034734R1	
R6463	CHIP TYPE CARBON RESISTOR	RN72K1J-223JE	1	435032234R1	
R6464	CHIP TYPE CARBON RESISTOR	RN72K1J-333JE	1	435033334R1	
R6465	CHIP TYPE CARBON RESISTOR	RN72K1J-223JE	1	435032234R1	
R6640	METAL RESISTOR	RNU1WCJ-8.2	1	453630824T	
R6641	METAL RESISTOR	RNU1WCJ-8.2	1	453630824T	
R6642	METAL RESISTOR	RNU1WCJ-8.2	1	453630824T	
R6643	METAL RESISTOR	RNU1WCJ-8.2	1	453630824T	
R6644	METAL RESISTOR	RNU1WCJ-8.2	1	453630824T	
R6645	METAL RESISTOR	RNU1WCJ-8.2	1	453630824T	
R6646	METAL RESISTOR	RNU1WCJ-8.2	1	453630824T	
[SW TRM]					
F6401A	FUSE HOLDER	SN5051	1	250113	!

F6401B	FUSE HOLDER	SN5051	1	250113	!
F6402A	FUSE HOLDER	SN5051	1	250113	!
F6402B	FUSE HOLDER	SN5051	1	250113	!
P101B	SOCKET	NSCT-7P2100	1	25052203	
P4001	PIN JACK	NPJ-6PDRW665	1	25045894	
P4002	PIN JACK	NPJ-4PDRW592	1	25045812	
P4003	PIN JACK	NPJ-4PDWR691	1	25045923	
P4004	PIN JACK	NPJ-2PDWR583	1	25045803	
P4007	PIN JACK	NPJ-2PDWR583	1	25045803	
P4008	PIN JACK	NPJ-4PDELNT660	1	25045889	
P4009	PIN JACK	NPJ-4PDWRP683	1	25045915	
P4011	PIN JACK	NPJ-1PDG742	1	25045992	
P501	WIRE HARNESS ASSEMBLY	NSAS-3P2094	1	2009991283UL	
P501A	WIRE HOL	NSCT-3P874	1	25051087	
P501Aor	WIRE HOL	CHD-1.5-3	(1)	25053535	
P5502B	PLUG	NPLG-20P0975	1	25056025	
P5503B	PLUG	NPLG-19P0974	1	25056024	
P5506B	RETAINER	(TRM)	1	25060507	
P5508	TRM-423(SCREW)	NEJITANSI ST3	1	25060495	
P5509A	RETAINER	(TRM)	1	25060507	
P6000B	PLUG	NPLG-9P0964	1	25056014	
P6001B	PLUG	NPLG-9P0964	1	25056014	
P6002B	PLUG	NPLG-9P0964	1	25056014	
P6003	WIRE HARNESS ASSEMBLY	NSAS-9P2223	1	2009991412UL	
P6003A	WIRE HOL	NSCT-9P900	1	25051113	
P6003Aor	WIRE HOL	CHD-2.5-9	(1)	25053543	
P6009B	RETAINER	(TRM)	1	25060507	
P6080	PLUG	NPLG-2P29	1	25055038	
P6081	PLUG	NPLG-2P29	1	25055038	
P6082	PLUG	NPLG-2P29	1	25055038	
P6083	PLUG	NPLG-2P29	1	25055038	
P6084	PLUG	NPLG-2P29	1	25055038	
P6085	PLUG	NPLG-2P29	1	25055038	
P6086	PLUG	NPLG-2P29	1	25055038	
P6201	PLUG	NPLG-5P152	1	25055168	
P6400A	CRIMP CORD ASSEMBLY	CLIMP AS	1	2069925080UL	
P6401A	CRIMP CORD ASSEMBLY	CRIMP AS	1	2069925222UL	
P6402A	CRIMP CORD ASSEMBLY	CRIMP AS	1	2069925146UL	
P6600	WIRE HARNESS ASSEMBLY	NSAS-7P2207	1	2009991396UL	
P6600A	WIRE HOL	NSCT-7P898	1	25051111	
P6600Aor	WIRE HOL	CHD-2.5-7	(1)	25053542	
RL4200	RELAY	NRL-2P2A-DC24-208	1	25065728	
RL4200 or	RELAY	NRL-2P2A-DC24-174	(1)	25065659	
RL4203	RELAY	NRL-2P2A-DC24-208	1	25065728	
RL4203 or	RELAY	NRL-2P2A-DC24-174	(1)	25065659	
RL6430	RELAY	NRL-1P10A-DC12-196	1	25065707	
RL6440	RELAY	NRL-1P10A-DC12-196	1	25065707	

U002 BADIS-1747-1C : NSP

CIRCUIT NO	PART NAME	DESCRIPTION	Q'TY	PART NO. (SN)	REMARKS
[SEMI CONDUCTOR]					
D1000	CHIP TYPE DIODE	DA2J10100	1	223303R2	
D1000 or	CHIP TYPE DIODE	1SS352	(1)	223234R2	
D1001	CHIP TYPE DIODE	DA2J10100	1	223303R2	
D1001 or	CHIP TYPE DIODE	1SS352	(1)	223234R2	
D5000	ZENER DIODE	DZ2J056M0L	1	224760560R2	
D5000 or	ZENER DIODE	UDZS5.6B	(1)	224550560R2	
D5001	ZENER DIODE	DZ2J056M0L	1	224760560R2	
D5001 or	ZENER DIODE	UDZS5.6B	(1)	224550560R2	
D5002	ZENER DIODE	DZ2J056M0L	1	224760560R2	
D5002 or	ZENER DIODE	UDZS5.6B	(1)	224550560R2	
D7502	ZENER DIODE	DZ2J082M0L	1	224760820R2	
D7502 or	ZENER DIODE	UDZS8.2B	(1)	224550820R2	

D7533	ZENER DIODE	DZ2J039M0L	1	224760390R2	
D7533 or	ZENER DIODE	UDZS3.9B	(1)	224550390R2	
D7652	LED	HLMP-Y701	1	225528	**N**
D7653	LED	HLMP-Y701	1	225528	
D7656	LED	SCB3318E-D2	1	225487	
D7801	ZENER DIODE	DZ2J051M0L	1	224760510R2	
D7801 or	ZENER DIODE	UDZS5.1B	(1)	224550510R2	
D7811	ZENER DIODE	DZ2J068M0L	1	224760680R2	
D7811 or	ZENER DIODE	UDZS6.8B	(1)	224550680R2	
D7812	ZENER DIODE	DZ2J068M0L	1	224760680R2	
D7812 or	ZENER DIODE	UDZS6.8B	(1)	224550680R2	
D7960	DIODE	RL1N4003	1	22380260T	
D7961	DIODE	RL1N4003	1	22380260T	
D7962	ZENER DIODE	DZ2J360M0L	1	224763600R2	
D7962 or	ZENER DIODE	UDZS36B	(1)	224553600R2	
D9001	DIODE	S1WB(A)60B-7062	1	22380377R2	
D9002	SPECIFIED DIODE	P6SMB200A-M3/52T	1	225505R2	
D9003	DIODE	US1K-E3/61T	1	22380376R2	
D9004	DIODE	RF301BM2STL	1	22380388R2	**N**
D9006	DIODE	M1FL20U	1	223276R2	
D9008	DIODE	RB050M-30GTR	1	22380373R2	
D9011	CHIP TYPE DIODE	DA2J10100	1	223303R2	
D9011 or	CHIP TYPE DIODE	1SS352	(1)	223234R2	
D9012	ZENER DIODE	DZ2J360M0L	1	224763600R2	
D9012 or	ZENER DIODE	UDZS36B	(1)	224553600R2	
D9013	SPECIFIED DIODE	P6SMB20A-M3/52	1	225515R2	
D9018	ZENER DIODE	DZ2J200M0L	1	224762000R2	
D9018 or	ZENER DIODE	UDZS20B	(1)	224552000R2	
Q1	HYBRID IC	RZ5B801-0001E2	1	22242835R2	
Q1000	HYBRID IC	TC74HCU04AF	1	222740046R2TO	
Q1501	HYBRID IC	NJM4580CG	1	22242922R2	
Q1502	HYBRID IC	NJM4580CG	1	22242922R2	
Q1503	HYBRID IC	NJM4580CG	1	22242922R2	
Q1504	HYBRID IC	NJM4580CG	1	22242922R2	
Q5000	TRANSISTOR	2SC2713-BL	1	2213136R2	
Q5001	TRANSISTOR	2SC2713-BL	1	2213136R2	
Q5002	TRANSISTOR	2SC2713-BL	1	2213136R2	
Q5010	TRANSISTOR	2SC2713-BL	1	2213136R2	
Q5011	TRANSISTOR	2SC2713-BL	1	2213136R2	
Q5012	TRANSISTOR	2SC2713-BL	1	2213136R2	
Q5030	TRANSISTOR	INA6006AP1-T111	1	2217980R2	
Q5031	TRANSISTOR	INA6006AP1-T111	1	2217980R2	
Q5032	TRANSISTOR	INA6006AP1-T111	1	2217980R2	
Q5040	TRANSISTOR	INC6006AP1-T111	1	2217990R2	
Q5041	TRANSISTOR	INC6006AP1-T111	1	2217990R2	
Q5042	TRANSISTOR	INC6006AP1-T111	1	2217990R2	
Q5050	TRANSISTOR	INC5001AP1-T111	1	2218100R2	
Q5051	TRANSISTOR	INC5001AP1-T111	1	2218100R2	
Q5052	TRANSISTOR	INC5001AP1-T111	1	2218100R2	
Q6010	TRANSISTOR	2SC2713-BL	1	2213136R2	
Q6011	TRANSISTOR	2SC2713-BL	1	2213136R2	
Q6012	TRANSISTOR	2SC2713-BL	1	2213136R2	
Q6020	TRANSISTOR	2SA1163-BL	1	2216756R2	
Q6021	TRANSISTOR	2SA1163-BL	1	2216756R2	
Q6022	TRANSISTOR	2SA1163-BL	1	2216756R2	
Q6030	TRANSISTOR	TTC004B_Q(S	1	2218022	
Q6031	TRANSISTOR	TTC004B_Q(S	1	2218022	
Q6032	TRANSISTOR	TTC004B_Q(S	1	2218022	
Q6040	TRANSISTOR	TTA004B_Q(S	1	2218012	
Q6041	TRANSISTOR	TTA004B_Q(S	1	2218012	
Q6042	TRANSISTOR	TTA004B_Q(S	1	2218012	
Q7501	HYBRID IC	ML9208A-13GA	1	22242772R3	
Q7502	FLUORESCENT TUBE	16-BT-168GNK	1	212279	
Q7502A	HOLDER	(FL)	1	27191222C	
Q7503	TRANSISTOR	KTC3875-GR	1	2216175R2	
Q7504	TRANSISTOR	KTC3875-GR	1	2216175R2	
Q7506	TRANSISTOR	KRA102S	1	2216220R2	

Q7511	HYBRID IC	BU2090F-E2	1	22242686R2	
Q7533	TRANSISTOR	KTC3875-GR	1	2216175R2	
Q7541	REMOTE SENSOR	IRM-3638M3S28	1	24130026	
Q7702A	RETAINER	(S)	1	27142074	
Q7802	HYBRID IC	NJM4580CG	1	22242922R2	
Q7803	TRANSISTOR	RTAN430C-T112-1	1	2217780R2	
Q7960	TRANSISTOR	KTA1661-Y	1	2217864R2	
Q7960 or	TRANSISTOR	INA5001AP1-T111	(1)	2218030R2	
Q7961	TRANSISTOR	2SC2712-GR	1	2213145R2	
Q7962	TRANSISTOR	KRA102S	1	2216220R2	
Q9001	HYBRID IC	STR-A6051M	1	222154	
Q9002	HYBRID IC	EL816MX	1	22242845	
Q9002 or	HYBRID IC	PC123X8YFZ0F	(1)	22242771	
Q9003	HYBRID IC	EL816MX	1	22242845	
Q9003 or	HYBRID IC	PC123X8YFZ0F	(1)	22242771	
Q9004	HYBRID IC	KIA431A-AT/P	1	22242770T	
Q9005	TRANSISTOR	KRC102S	1	2216190R2	
Q9005 or	TRANSISTOR	RN1402	(1)	2214470R2	
[TRANS COIL]					
L1	CHIP TYPE CARBON RESISTOR	RN72K1J-000JE	1	435030004R1	
L1000	CHOKE COIL	LBC2518T2R2M	1	231364M022R2	
L1003	CHOKE COIL	LBC2518T470M	1	231364M470R2	
L1005	EMI SUPPRESSION FILTER	BK1608HS102-T	1	230955R2	
L2	CHIP TYPE CARBON RESISTOR	RN72K1J-000JE	1	435030004R1	
L3	RF COIL	SDCL1608CR33JTDF	1	233557R1	
L3 or	RF COIL	HK1608R33J-T	(1)	233559R1	
L4	RF COIL	SDCL1608CR10JTDF	1	233556R1	
L4 or	RF COIL	HK1608R10J-T	(1)	233558R1	
L5	ANTENNA COIL	K7-D	1	232212	
L9001	CHOKE COIL	EM-UT2014-0033	1	231474	
L9002	CHOKE COIL	RCR1010NP-100M	1	231449M100	
L9004	CORE	BLM18PG181SN1D	1	2350005R1	
L9005	CORE	BLM18PG181SN1D	1	2350005R1	
T9001	POWER TRANSFORMER	NPT-1632S	1	2302076	!
T9001 or	POWER TRANSFORMER	NPT-1633S	(1)	2302077	!
X1	CRYSTAL	HC-49S 9B12.000MHz	1	3010533	
[CAPACITOR]					
C1	CHIP TYPE CERAMIC CAPACITOR	CC725CH1H-101J1	1	342101014R1	
C1000	CHIP TYPE CERAMIC CAPACITOR	CK725F1E-104Z1	1	332161040R1	
C1002	CHIP TYPE CERAMIC CAPACITOR	CK725B1C-104K1	1	332121045R1	
C1003	CHIP TYPE CERAMIC CAPACITOR	CC725CH1H-080D1	1	342100802R1	
C1005	CHIP TYPE CERAMIC CAPACITOR	CK725F1E-104Z1	1	332161040R1	
C1009	CHIP TYPE CERAMIC CAPACITOR	CK725F1E-104Z1	1	332161040R1	
C1010	CHIP TYPE CERAMIC CAPACITOR	CK725F1E-104Z1	1	332161040R1	
C1011	CHIP TYPE CERAMIC CAPACITOR	CC725CH1H-330J1	1	342103304R1	
C1012	CHIP TYPE CERAMIC CAPACITOR	CC725CH1H-330J1	1	342103304R1	
C1013	UTSP TYPE ELECTROLYTIC CAPACITOR	CE04W25V-220M(UTSP)	1	397552217T	
C12	CHIP TYPE CERAMIC CAPACITOR	CC725CH1H-090D1	1	342100902R1	
C13	CHIP TYPE CERAMIC CAPACITOR	CK725B1C-104K1	1	332121045R1	
C1500	UMXR TYPE PLASTIC FILM CAPACITOR	1JUMXRTF332JE	1	376593324T	
C1501	UMXR TYPE PLASTIC FILM CAPACITOR	1JUMXRTF332JE	1	376593324T	
C1502	UMXR TYPE PLASTIC FILM CAPACITOR	1JUMXRTF332JE	1	376593324T	
C1503	UMXR TYPE PLASTIC FILM CAPACITOR	1JUMXRTF332JE	1	376593324T	
C1504	UMXR TYPE PLASTIC FILM CAPACITOR	1JUMXRTF332JE	1	376593324T	
C1505	UMXR TYPE PLASTIC FILM CAPACITOR	1JUMXRTF332JE	1	376593324T	
C1506	UMXR TYPE PLASTIC FILM CAPACITOR	1JUMXRTF332JE	1	376593324T	
C1507	UMXR TYPE PLASTIC FILM CAPACITOR	1JUMXRTF332JE	1	376593324T	
C1510	UPZ TYPE PLASTIC FILM CAPACITOR	2AUPZTF681JE	1	376336814T	
C1511	UPZ TYPE PLASTIC FILM CAPACITOR	2AUPZTF681JE	1	376336814T	
C1512	UPZ TYPE PLASTIC FILM CAPACITOR	2AUPZTF681JE	1	376336814T	
C1513	CHIP TYPE CERAMIC CAPACITOR	CC725CH1H-681J1	1	342106814R1	
C1514	CHIP TYPE CERAMIC CAPACITOR	CC725CH1H-681J1	1	342106814R1	
C1515	CHIP TYPE CERAMIC CAPACITOR	CC725CH1H-681J1	1	342106814R1	
C1516	CHIP TYPE CERAMIC CAPACITOR	CC725CH1H-681J1	1	342106814R1	
C1517	UPZ TYPE PLASTIC FILM CAPACITOR	2AUPZTF681JE	1	376336814T	
C1520	UPZ TYPE PLASTIC FILM CAPACITOR	2AUPZTF681JE	1	376336814T	
C1521	UPZ TYPE PLASTIC FILM CAPACITOR	2AUPZTF681JE	1	376336814T	

C1522	UPZ TYPE PLASTIC FILM CAPACITOR	2AUPZTF681JE	1	376336814T
C1523	CHIP TYPE CERAMIC CAPACITOR	CC725CH1H-681J1	1	342106814R1
C1524	CHIP TYPE CERAMIC CAPACITOR	CC725CH1H-681J1	1	342106814R1
C1525	CHIP TYPE CERAMIC CAPACITOR	CC725CH1H-681J1	1	342106814R1
C1526	CHIP TYPE CERAMIC CAPACITOR	CC725CH1H-681J1	1	342106814R1
C1527	UPZ TYPE PLASTIC FILM CAPACITOR	2AUPZTF681JE	1	376336814T
C1598	UTSP TYPE ELECTROLYTIC CAPACITOR	CE04W25V-220M(UTSP)	1	397552217T
C1599	UTSP TYPE ELECTROLYTIC CAPACITOR	CE04W25V-220M(UTSP)	1	397552217T
C1620	CHIP TYPE CERAMIC CAPACITOR	CK725F1E-104Z1	1	332161040R1
C1621	CHIP TYPE CERAMIC CAPACITOR	CK725F1E-104Z1	1	332161040R1
C2	CHIP TYPE CERAMIC CAPACITOR	CC725CH1H-220J1	1	342102204R1
C3	CHIP TYPE CERAMIC CAPACITOR	CK725B1H-332K1	1	332103325R1
C4	CHIP TYPE CERAMIC CAPACITOR	CC725CH1H-100D1	1	342101002R1
C5	CHIP TYPE CERAMIC CAPACITOR	CK725B1H-473K1	1	332104735R1
C5000	UPZ TYPE PLASTIC FILM CAPACITOR	2AUPZTF471JE	1	376334714T
C5001	UPZ TYPE PLASTIC FILM CAPACITOR	2AUPZTF471JE	1	376334714T
C5002	UPZ TYPE PLASTIC FILM CAPACITOR	2AUPZTF471JE	1	376334714T
C5010	UTSP TYPE ELECTROLYTIC CAPACITOR	CE04W50V 47M(UTSP)	1	397584707AT
C5011	UTSP TYPE ELECTROLYTIC CAPACITOR	CE04W50V 47M(UTSP)	1	397584707AT
C5012	UTSP TYPE ELECTROLYTIC CAPACITOR	CE04W50V 47M(UTSP)	1	397584707AT
C5020	UTSP TYPE ELECTROLYTIC CAPACITOR	CE04W50V-10M(UTSP)	1	397581007AT
C5021	UTSP TYPE ELECTROLYTIC CAPACITOR	CE04W50V-10M(UTSP)	1	397581007AT
C5022	UTSP TYPE ELECTROLYTIC CAPACITOR	CE04W50V-10M(UTSP)	1	397581007AT
C5040	UTSP TYPE ELECTROLYTIC CAPACITOR	CE04W25V-220M(UTSP)	1	397552217T
C5041	UTSP TYPE ELECTROLYTIC CAPACITOR	CE04W25V-220M(UTSP)	1	397552217T
C5042	UTSP TYPE ELECTROLYTIC CAPACITOR	CE04W25V-220M(UTSP)	1	397552217T
C5050	UTSP TYPE ELECTROLYTIC CAPACITOR	CE04W50V 47M(UTSP)	1	397584707AT
C5051	UTSP TYPE ELECTROLYTIC CAPACITOR	CE04W50V 47M(UTSP)	1	397584707AT
C5052	UTSP TYPE ELECTROLYTIC CAPACITOR	CE04W50V 47M(UTSP)	1	397584707AT
C5080	CERAMIC CAPACITOR	CC45SL50V-040C	1	345020401T
C5081	CERAMIC CAPACITOR	CC45SL50V-040C	1	345020401T
C5082	CERAMIC CAPACITOR	CC45SL50V-040C	1	345020401T
C5090	UPZ TYPE PLASTIC FILM CAPACITOR	2AUPZTF101JE	1	376331014T
C5091	UPZ TYPE PLASTIC FILM CAPACITOR	2AUPZTF101JE	1	376331014T
C5092	UPZ TYPE PLASTIC FILM CAPACITOR	2AUPZTF101JE	1	376331014T
C5100	VR TYPE ELECTROLYTIC CAPACITOR	CE04W100V-22M(VR)	1	394692207T
C5101	VR TYPE ELECTROLYTIC CAPACITOR	CE04W100V-22M(VR)	1	394692207T
C5102	VR TYPE ELECTROLYTIC CAPACITOR	CE04W100V-22M(VR)	1	394692207T
C5110	VR TYPE ELECTROLYTIC CAPACITOR	CE04W100V-22M(VR)	1	394692207T
C5111	VR TYPE ELECTROLYTIC CAPACITOR	CE04W100V-22M(VR)	1	394692207T
C5112	VR TYPE ELECTROLYTIC CAPACITOR	CE04W100V-22M(VR)	1	394692207T
C6	CHIP TYPE CERAMIC CAPACITOR	CK725B1H-222K1	1	332102225R1
C6000	TF TYPE PLASTIC FILM CAPACITOR	ECQ-V50V-103J	1	374721034T
C6001	TF TYPE PLASTIC FILM CAPACITOR	ECQ-V50V-103J	1	374721034T
C6002	TF TYPE PLASTIC FILM CAPACITOR	ECQ-V50V-103J	1	374721034T
C6040	UTSP TYPE ELECTROLYTIC CAPACITOR	CE04W50V 47M(UTSP)	1	397584707AT
C6041	UTSP TYPE ELECTROLYTIC CAPACITOR	CE04W50V 47M(UTSP)	1	397584707AT
C6042	UTSP TYPE ELECTROLYTIC CAPACITOR	CE04W50V 47M(UTSP)	1	397584707AT
C7	CHIP TYPE CERAMIC CAPACITOR	CK725B1A-105K1	1	332131055R1
C7502	CHIP TYPE CERAMIC CAPACITOR	CK725F1E-104Z1	1	332161040R1
C7503	CHIP TYPE CERAMIC CAPACITOR	CC725CH1H-101J1	1	342101014R1
C7504	CHIP TYPE CERAMIC CAPACITOR	CC725CH1H-101J1	1	342101014R1
C7505	CHIP TYPE CERAMIC CAPACITOR	CC725CH1H-101J1	1	342101014R1
C7508	ELECTROLYTIC CAPACITOR	CE04W6.3V-100M(S)	1	353721019T
C7509	CHIP TYPE CERAMIC CAPACITOR	CK725F1E-104Z1	1	332161040R1
C7510	CHIP TYPE CERAMIC CAPACITOR	CK725B1H-223K1	1	332102235R1
C7511	CHIP TYPE CERAMIC CAPACITOR	CK725B1H-223K1	1	332102235R1
C7512	CHIP TYPE CERAMIC CAPACITOR	CK725B1H-223K1	1	332102235R1
C7514	CHIP TYPE CERAMIC CAPACITOR	CK725B1H-223K1	1	332102235R1
C7515	ELECTROLYTIC CAPACITOR	CE04W16V-47M(S)	1	353744709T
C7516	CHIP TYPE CERAMIC CAPACITOR	CK725B1H-223K1	1	332102235R1
C7517	CHIP TYPE CERAMIC CAPACITOR	CK725B1H-223K1	1	332102235R1
C7518	TF TYPE PLASTIC FILM CAPACITOR	ECQ-V50V-474J	1	374724744T
C7518 or	FILM C	C281H474J20A21A	(1)	376824744T
C7520	CHIP TYPE CERAMIC CAPACITOR	CK725B1H-223K1	1	332102235R1
C7521	CHIP TYPE CERAMIC CAPACITOR	CK725B1H-103K1	1	332101035R1
C7522	CHIP TYPE CERAMIC CAPACITOR	CK725B1H-103K1	1	332101035R1

C7523	CHIP TYPE CERAMIC CAPACITOR	CC725CH1H-390J1	1	342103904R1	
C7531	CHIP TYPE CERAMIC CAPACITOR	CK725B1H-223K1	1	332102235R1	
C7532	CHIP TYPE CERAMIC CAPACITOR	CK725B1H-223K1	1	332102235R1	
C7533	ELECTROLYTIC CAPACITOR	CE04W16V-10M(S)	1	353741009T	
C7541	ELECTROLYTIC CAPACITOR	CE04W16V-10M(S)	1	353741009T	
C7542	CHIP TYPE CERAMIC CAPACITOR	CC725CH1H-102J1	1	342101024R1	
C7543	CHIP TYPE CERAMIC CAPACITOR	CC725CH1H-102J1	1	342101024R1	
C7550	CHIP TYPE CERAMIC CAPACITOR	CK725F1E-104Z1	1	332161040R1	
C7551	CHIP TYPE CERAMIC CAPACITOR	CK725F1A-105Z1	1	332181050R1	
C7553	CHIP TYPE CERAMIC CAPACITOR	CC725CH1H-101J1	1	342101014R1	
C7554	CHIP TYPE CERAMIC CAPACITOR	CC725CH1H-101J1	1	342101014R1	
C7557	CHIP TYPE CERAMIC CAPACITOR	CK725F1E-104Z1	1	332161040R1	
C7705	CHIP TYPE CERAMIC CAPACITOR	CK725F1E-104Z1	1	332161040R1	
C7716	CHIP TYPE CERAMIC CAPACITOR	CK725F1E-104Z1	1	332161040R1	
C7751	CHIP TYPE CERAMIC CAPACITOR	CC725CH1H-102J1	1	342101024R1	
C7752	CHIP TYPE CERAMIC CAPACITOR	CK725B1H-223K1	1	332102235R1	
C7753	UMXR TYPE PLASTIC FILM CAPACITOR	1JUMXRTF102JE	1	376591024T	
C7754	UMXR TYPE PLASTIC FILM CAPACITOR	1JUMXRTF102JE	1	376591024T	
C7803	ELECTROLYTIC CAPACITOR	CE04W16V-47M(S)	1	353744709T	
C7805	ELECTROLYTIC CAPACITOR	CE04W16V-10M(S)	1	353741009T	
C7811	ELECTROLYTIC CAPACITOR	CE04W16V-47M(S)	1	353744709T	
C7812	ELECTROLYTIC CAPACITOR	CE04W16V-47M(S)	1	353744709T	
C7831	ELECTROLYTIC CAPACITOR	CE04W16V-10M(S)	1	353741009T	
C7832	CHIP TYPE CERAMIC CAPACITOR	CC725CH1H-101J1	1	342101014R1	
C7833	CHIP TYPE CERAMIC CAPACITOR	CC725CH1H-102J1	1	342101024R1	
C7834	CHIP TYPE CERAMIC CAPACITOR	CC725CH1H-330J1	1	342103304R1	
C7950	TF TYPE PLASTIC FILM CAPACITOR	ECQ-V50V-104J	1	374721044T	
C7950 or	FILM C	C281H104J20A21A	(1)	376821044T	
C7960	VR TYPE ELECTROLYTIC CAPACITOR	CE04W63V-100M(VR)	1	394671017T	
C7960 or	JAMICON TYPE ELECTROLYTIC CAPACITOR	CE04W63V-100M	(1)	398571017T	
C7961	UTSP TYPE ELECTROLYTIC CAPACITOR	CE04W50V 47M(UTSP)	1	397584707AT	
C7962	TF TYPE PLASTIC FILM CAPACITOR	ECQ-V50V-104J	1	374721044T	
C7962 or	FILM C	C281H104J20A21A	(1)	376821044T	
C7963	UTSP TYPE ELECTROLYTIC CAPACITOR	CE04W50V 47M(UTSP)	1	397584707AT	
C8	CHIP TYPE CERAMIC CAPACITOR	CK725B1A-105K1	1	332131055R1	
C9	CHIP TYPE CERAMIC CAPACITOR	CK732B16V-106K	1	332071065R2	
C9001	IS TYPE CAPACITOR	LE104-MX-C3.5	1	3800049S	!
C9002	ELECTROLYTIC CAPACITOR	CE04W200V-100M(KXJ)	1	3500233S	
C9003	PW TYPE ELECTROLYTIC CAPACITOR	CE04W50V-10M(PW)	1	393781007T	
C9004	PW TYPE ELECTROLYTIC CAPACITOR	CE04W25V-1000M(PW)	1	393751027S	
C9006	PW TYPE ELECTROLYTIC CAPACITOR	CE04W25V-470M(PW)	1	393754717T	
C9009	CHIP TYPE CERAMIC CAPACITOR	GRM31A7U3D220JW31D	1	3300071R1	
C9010	IS TYPE CAPACITOR	DE1E3KX102MB4BL01	1	3300066S	!
C9011	CHIP TYPE CERAMIC CAPACITOR	CK725B1C-104K1	1	332121045R1	
C9012	IS TYPE CAPACITOR	ECQU2A103MLC	1	3800039S	!
C9012 or	IS TYPE CAPACITOR	LE103-C3.5	(1)	3800042S	!
C9013	UTSP TYPE ELECTROLYTIC CAPACITOR	CE04W25V-220M(UTSP)	1	397552217T	
C9014	CHIP TYPE CERAMIC CAPACITOR	CK725B1H-103K1	1	332101035R1	
C9015	CHIP TYPE CERAMIC CAPACITOR	CK725F1E-104Z1	1	332161040R1	
C9016	CHIP TYPE CERAMIC CAPACITOR	CK725B1H-332K1	1	332103325R1	
C9018	IS TYPE CAPACITOR	LE104-MX-C3.5	1	3800049S	!
C9019	IS TYPE CAPACITOR	DE1E3KX102MB4BL01	1	3300066S	!
C9020	IS TYPE CAPACITOR	DE1E3KX102MB4BL01	1	3300066S	!
C9023	CHIP TYPE CERAMIC CAPACITOR	CK725F1E-104Z1	1	332161040R1	
C9024	CHIP TYPE CERAMIC CAPACITOR	CK725F1E-104Z1	1	332161040R1	
[RESISTOR]					
R10	CHIP TYPE CARBON RESISTOR	RN72K1J-000JE	1	435030004R1	
R1000	CHIP TYPE CARBON RESISTOR	RN72K1J-331JE	1	435033314R1	
R1001	CHIP TYPE CARBON RESISTOR	RN72K1J-750JE	1	435037504R1	
R1002	CHIP TYPE CARBON RESISTOR	RN72K1J-100JE	1	435031004R1	
R1004	CHIP TYPE CARBON RESISTOR	RN72K1J-823JE	1	435038234R1	
R1005	CHIP TYPE CARBON RESISTOR	RN72K1J-103JE	1	435031034R1	
R1011	CHIP TYPE CARBON RESISTOR	RN72K1J-470JE	1	435034704R1	
R1012	CHIP TYPE CARBON RESISTOR	RN72K1J-470JE	1	435034704R1	
R11	CHIP TYPE CARBON RESISTOR	RN72K1J-000JE	1	435030004R1	
R13	CHIP TYPE CARBON RESISTOR	RN72K1J-000JE	1	435030004R1	
R14	CHIP TYPE CARBON RESISTOR	RN72K1J-000JE	1	435030004R1	

R1402	CHIP TYPE CARBON RESISTOR	RN72K1J-000JE	1	435030004R1
R1403	CHIP TYPE CARBON RESISTOR	RN72K1J-000JE	1	435030004R1
R1500	CHIP TYPE CARBON RESISTOR	RN72K1J-332JE	1	435033324R1
R1501	CHIP TYPE CARBON RESISTOR	RN72K1J-332JE	1	435033324R1
R1502	CHIP TYPE CARBON RESISTOR	RN72K1J-332JE	1	435033324R1
R1503	CHIP TYPE CARBON RESISTOR	RN72K1J-332JE	1	435033324R1
R1504	CHIP TYPE CARBON RESISTOR	RN72K1J-332JE	1	435033324R1
R1505	CHIP TYPE CARBON RESISTOR	RN72K1J-332JE	1	435033324R1
R1506	CHIP TYPE CARBON RESISTOR	RN72K1J-332JE	1	435033324R1
R1507	CHIP TYPE CARBON RESISTOR	RN72K1J-332JE	1	435033324R1
R1510	CHIP TYPE CARBON RESISTOR	RN72K1J-332JE	1	435033324R1
R1511	CHIP TYPE CARBON RESISTOR	RN72K1J-332JE	1	435033324R1
R1512	CHIP TYPE CARBON RESISTOR	RN72K1J-332JE	1	435033324R1
R1513	CHIP TYPE CARBON RESISTOR	RN72K1J-332JE	1	435033324R1
R1514	CHIP TYPE CARBON RESISTOR	RN72K1J-332JE	1	435033324R1
R1515	CHIP TYPE CARBON RESISTOR	RN72K1J-332JE	1	435033324R1
R1516	CHIP TYPE CARBON RESISTOR	RN72K1J-332JE	1	435033324R1
R1517	CHIP TYPE CARBON RESISTOR	RN72K1J-332JE	1	435033324R1
R1520	CHIP TYPE CARBON RESISTOR	RN72K1J-332JE	1	435033324R1
R1521	CHIP TYPE CARBON RESISTOR	RN72K1J-332JE	1	435033324R1
R1522	CHIP TYPE CARBON RESISTOR	RN72K1J-332JE	1	435033324R1
R1523	CHIP TYPE CARBON RESISTOR	RN72K1J-332JE	1	435033324R1
R1524	CHIP TYPE CARBON RESISTOR	RN72K1J-332JE	1	435033324R1
R1525	CHIP TYPE CARBON RESISTOR	RN72K1J-332JE	1	435033324R1
R1526	CHIP TYPE CARBON RESISTOR	RN72K1J-332JE	1	435033324R1
R1527	CHIP TYPE CARBON RESISTOR	RN72K1J-332JE	1	435033324R1
R1530	CHIP TYPE CARBON RESISTOR	RN72K1J-332JE	1	435033324R1
R1531	CHIP TYPE CARBON RESISTOR	RN72K1J-332JE	1	435033324R1
R1532	CHIP TYPE CARBON RESISTOR	RN72K1J-332JE	1	435033324R1
R1533	CHIP TYPE CARBON RESISTOR	RN72K1J-332JE	1	435033324R1
R1534	CHIP TYPE CARBON RESISTOR	RN72K1J-332JE	1	435033324R1
R1535	CHIP TYPE CARBON RESISTOR	RN72K1J-332JE	1	435033324R1
R1536	CHIP TYPE CARBON RESISTOR	RN72K1J-332JE	1	435033324R1
R1537	CHIP TYPE CARBON RESISTOR	RN72K1J-332JE	1	435033324R1
R1540	CHIP TYPE CARBON RESISTOR	RN72K1J-000JE	1	435030004R1
R1541	CHIP TYPE CARBON RESISTOR	RN72K1J-000JE	1	435030004R1
R1542	CHIP TYPE CARBON RESISTOR	RN72K1J-000JE	1	435030004R1
R1543	CHIP TYPE CARBON RESISTOR	RN72K1J-000JE	1	435030004R1
R1544	CHIP TYPE CARBON RESISTOR	RN72K1J-000JE	1	435030004R1
R1545	CHIP TYPE CARBON RESISTOR	RN72K1J-000JE	1	435030004R1
R1546	CHIP TYPE CARBON RESISTOR	RN72K1J-000JE	1	435030004R1
R1547	CHIP TYPE CARBON RESISTOR	RN72K1J-000JE	1	435030004R1
R1550	CHIP TYPE CARBON RESISTOR	RN72K1J-000JE	1	435030004R1
R1551	CHIP TYPE CARBON RESISTOR	RN72K1J-000JE	1	435030004R1
R1552	CHIP TYPE CARBON RESISTOR	RN72K1J-000JE	1	435030004R1
R1553	CHIP TYPE CARBON RESISTOR	RN72K1J-000JE	1	435030004R1
R1554	CHIP TYPE CARBON RESISTOR	RN72K1J-000JE	1	435030004R1
R1555	CHIP TYPE CARBON RESISTOR	RN72K1J-000JE	1	435030004R1
R1556	CHIP TYPE CARBON RESISTOR	RN72K1J-000JE	1	435030004R1
R1557	CHIP TYPE CARBON RESISTOR	RN72K1J-000JE	1	435030004R1
R1560	CHIP TYPE CARBON RESISTOR	RN72K1J-151JE	1	435031514R1
R1561	CHIP TYPE CARBON RESISTOR	RN72K1J-151JE	1	435031514R1
R1562	CHIP TYPE CARBON RESISTOR	RN72K1J-151JE	1	435031514R1
R1563	CHIP TYPE CARBON RESISTOR	RN72K1J-151JE	1	435031514R1
R1564	CHIP TYPE CARBON RESISTOR	RN72K1J-151JE	1	435031514R1
R1565	CHIP TYPE CARBON RESISTOR	RN72K1J-151JE	1	435031514R1
R1566	CHIP TYPE CARBON RESISTOR	RN72K1J-151JE	1	435031514R1
R1567	CHIP TYPE CARBON RESISTOR	RN72K1J-151JE	1	435031514R1
R1570	CHIP TYPE CARBON RESISTOR	RN72K1J-151JE	1	435031514R1
R1571	CHIP TYPE CARBON RESISTOR	RN72K1J-151JE	1	435031514R1
R1572	CHIP TYPE CARBON RESISTOR	RN72K1J-151JE	1	435031514R1
R1573	CHIP TYPE CARBON RESISTOR	RN72K1J-151JE	1	435031514R1
R1574	CHIP TYPE CARBON RESISTOR	RN72K1J-151JE	1	435031514R1
R1575	CHIP TYPE CARBON RESISTOR	RN72K1J-151JE	1	435031514R1
R1576	CHIP TYPE CARBON RESISTOR	RN72K1J-151JE	1	435031514R1
R1577	CHIP TYPE CARBON RESISTOR	RN72K1J-151JE	1	435031514R1
R1590	CHIP TYPE CARBON RESISTOR	RN72K1J-000JE	1	435030004R1

R1591	CHIP TYPE CARBON RESISTOR	RN72K1J-000JE	1	435030004R1
R1598	CHIP TYPE CARBON RESISTOR	RN72K1J-100JE	1	435031004R1
R1599	CHIP TYPE CARBON RESISTOR	RN72K1J-100JE	1	435031004R1
R2	CHIP TYPE CARBON RESISTOR	RN72K1J-101JE	1	435031014R1
R21	CHIP TYPE CARBON RESISTOR	RN72K2E-000JE	1	435220004R1
R22	CHIP TYPE CARBON RESISTOR	RN72K2E-000JE	1	435220004R1
R3	EMI SUPPRESSION FILTER	BK1608HS601-T	1	230984R1
R4	EMI SUPPRESSION FILTER	BK1608HS601-T	1	230984R1
R5	CHIP TYPE CARBON RESISTOR	RN72K1J-103JE	1	435031034R1
R5000	CHIP TYPE CARBON RESISTOR	RN72K1J-222JE	1	435032224R1
R5001	CHIP TYPE CARBON RESISTOR	RN72K1J-222JE	1	435032224R1
R5002	CHIP TYPE CARBON RESISTOR	RN72K1J-222JE	1	435032224R1
R5010	CHIP TYPE CARBON RESISTOR	RN72K1J-563JE	1	435035634R1
R5011	CHIP TYPE CARBON RESISTOR	RN72K1J-563JE	1	435035634R1
R5012	CHIP TYPE CARBON RESISTOR	RN72K1J-563JE	1	435035634R1
R5020	CHIP TYPE CARBON RESISTOR	RN72K1J-331JE	1	435033314R1
R5021	CHIP TYPE CARBON RESISTOR	RN72K1J-331JE	1	435033314R1
R5022	CHIP TYPE CARBON RESISTOR	RN72K1J-331JE	1	435033314R1
R5030	NON-FLAMMABLE CARBON FILM RESISTOR	R25J-56K	1	415475634T
R5031	NON-FLAMMABLE CARBON FILM RESISTOR	R25J-56K	1	415475634T
R5032	NON-FLAMMABLE CARBON FILM RESISTOR	R25J-56K	1	415475634T
R5040	CHIP TYPE CARBON RESISTOR	RN72K1J-182JE	1	435031824R1
R5041	CHIP TYPE CARBON RESISTOR	RN72K1J-182JE	1	435031824R1
R5042	CHIP TYPE CARBON RESISTOR	RN72K1J-182JE	1	435031824R1
R5050	CHIP TYPE CARBON RESISTOR	RN72K1J-562JE	1	435035624R1
R5051	CHIP TYPE CARBON RESISTOR	RN72K1J-562JE	1	435035624R1
R5052	CHIP TYPE CARBON RESISTOR	RN72K1J-562JE	1	435035624R1
R5060	CHIP TYPE CARBON RESISTOR	RN72K1J-182JE	1	435031824R1
R5061	CHIP TYPE CARBON RESISTOR	RN72K1J-182JE	1	435031824R1
R5062	CHIP TYPE CARBON RESISTOR	RN72K1J-182JE	1	435031824R1
R5070	CHIP TYPE CARBON RESISTOR	RN72K1J-152JE	1	435031524R1
R5071	CHIP TYPE CARBON RESISTOR	RN72K1J-152JE	1	435031524R1
R5072	CHIP TYPE CARBON RESISTOR	RN72K1J-152JE	1	435031524R1
R5080	CHIP TYPE CARBON RESISTOR	RN72K1J-152JE	1	435031524R1
R5081	CHIP TYPE CARBON RESISTOR	RN72K1J-152JE	1	435031524R1
R5082	CHIP TYPE CARBON RESISTOR	RN72K1J-152JE	1	435031524R1
R5090	METAL OXIDE FILM RESISTOR	RS1/2WBJ-100K	1	443521044T
R5091	METAL OXIDE FILM RESISTOR	RS1/2WBJ-100K	1	443521044T
R5092	METAL OXIDE FILM RESISTOR	RS1/2WBJ-100K	1	443521044T
R5100	CHIP TYPE CARBON RESISTOR	RN72K1J-104JE	1	435031044R1
R5101	CHIP TYPE CARBON RESISTOR	RN72K1J-104JE	1	435031044R1
R5102	CHIP TYPE CARBON RESISTOR	RN72K1J-104JE	1	435031044R1
R5110	CHIP TYPE CARBON RESISTOR	RN72K1J-152JE	1	435031524R1
R5111	CHIP TYPE CARBON RESISTOR	RN72K1J-152JE	1	435031524R1
R5112	CHIP TYPE CARBON RESISTOR	RN72K1J-152JE	1	435031524R1
R5120	NON-FLAMMABLE CARBON FILM RESISTOR	R25J-39K	1	415473934T
R5121	NON-FLAMMABLE CARBON FILM RESISTOR	R25J-39K	1	415473934T
R5122	NON-FLAMMABLE CARBON FILM RESISTOR	R25J-39K	1	415473934T
R5130	NON-FLAMMABLE CARBON FILM RESISTOR	R25J-39K	1	415473934T
R5131	NON-FLAMMABLE CARBON FILM RESISTOR	R25J-39K	1	415473934T
R5132	NON-FLAMMABLE CARBON FILM RESISTOR	R25J-39K	1	415473934T
R5160	NON-FLAMMABLE CARBON FILM RESISTOR	R25J-220	1	415472214T
R5161	NON-FLAMMABLE CARBON FILM RESISTOR	R25J-220	1	415472214T
R5162	NON-FLAMMABLE CARBON FILM RESISTOR	R25J-220	1	415472214T
R5170	NON-FLAMMABLE CARBON FILM RESISTOR	R25J-220	1	415472214T
R5171	NON-FLAMMABLE CARBON FILM RESISTOR	R25J-220	1	415472214T
R5172	NON-FLAMMABLE CARBON FILM RESISTOR	R25J-220	1	415472214T
R5180	NON-FLAMMABLE CARBON FILM RESISTOR	R25J-10	1	415471004T
R5181	NON-FLAMMABLE CARBON FILM RESISTOR	R25J-10	1	415471004T
R5182	NON-FLAMMABLE CARBON FILM RESISTOR	R25J-10	1	415471004T
R5190	NON-FLAMMABLE CARBON FILM RESISTOR	R25J-10	1	415471004T
R5191	NON-FLAMMABLE CARBON FILM RESISTOR	R25J-10	1	415471004T
R5192	NON-FLAMMABLE CARBON FILM RESISTOR	R25J-10	1	415471004T
R5300	CHIP TYPE CARBON RESISTOR	RN72K1J-330JE	1	435033304R1
R5301	CHIP TYPE CARBON RESISTOR	RN72K1J-330JE	1	435033304R1
R5302	CHIP TYPE CARBON RESISTOR	RN72K1J-330JE	1	435033304R1
R5310	CHIP TYPE CARBON RESISTOR	RN72K1J-330JE	1	435033304R1

R5311	CHIP TYPE CARBON RESISTOR	RN72K1J-330JE	1	435033304R1
R5312	CHIP TYPE CARBON RESISTOR	RN72K1J-330JE	1	435033304R1
R5390	CHIP TYPE CARBON RESISTOR	RN72K1J-182FE	1	435031822R1
R5391	CHIP TYPE CARBON RESISTOR	RN72K1J-222FE	1	435032222R1
R5392	CHIP TYPE CARBON RESISTOR	RN72K1J-182FE	1	435031822R1
R6	CHIP TYPE CARBON RESISTOR	RN72K1J-472JE	1	435034724R1
R6020	NON-FLAMMABLE CARBON FILM RESISTOR	R25J-2.2	1	415470224T
R6021	NON-FLAMMABLE CARBON FILM RESISTOR	R25J-2.2	1	415470224T
R6022	NON-FLAMMABLE CARBON FILM RESISTOR	R25J-2.2	1	415470224T
R6030	CHIP TYPE CARBON RESISTOR	RN72K1J-152FE	1	435031522R1
R6031	CHIP TYPE CARBON RESISTOR	RN72K1J-152FE	1	435031522R1
R6032	CHIP TYPE CARBON RESISTOR	RN72K1J-152FE	1	435031522R1
R6050	CHIP TYPE CARBON RESISTOR	RN72K1J-000JE	1	435030004R1
R6051	CHIP TYPE CARBON RESISTOR	RN72K1J-000JE	1	435030004R1
R6052	CHIP TYPE CARBON RESISTOR	RN72K1J-000JE	1	435030004R1
R6060	CHIP TYPE CARBON RESISTOR	RN72K1J-152FE	1	435031522R1
R6061	CHIP TYPE CARBON RESISTOR	RN72K1J-152FE	1	435031522R1
R6062	CHIP TYPE CARBON RESISTOR	RN72K1J-152FE	1	435031522R1
R6070	NON-FLAMMABLE CARBON FILM RESISTOR	R25J-150	1	415471514T
R6071	NON-FLAMMABLE CARBON FILM RESISTOR	R25J-150	1	415471514T
R6072	NON-FLAMMABLE CARBON FILM RESISTOR	R25J-150	1	415471514T
R6200	CHIP TYPE CARBON RESISTOR	RN72K1J-000JE	1	435030004R1
R6201	CHIP TYPE CARBON RESISTOR	RN72K1J-000JE	1	435030004R1
R6202	CHIP TYPE CARBON RESISTOR	RN72K1J-000JE	1	435030004R1
R7	CHIP TYPE CARBON RESISTOR	RN72K1J-472JE	1	435034724R1
R7502	CHIP TYPE CARBON RESISTOR	RN72K1J-332JE	1	435033324R1
R7503	CHIP TYPE CARBON RESISTOR	RN72K1J-332JE	1	435033324R1
R7504	CHIP TYPE CARBON RESISTOR	RN72K1J-221JE	1	435032214R1
R7505	CHIP TYPE CARBON RESISTOR	RN72K1J-221JE	1	435032214R1
R7507	CHIP TYPE CARBON RESISTOR	RN72K1J-221JE	1	435032214R1
R7508	CHIP TYPE CARBON RESISTOR	RN72K1J-221JE	1	435032214R1
R7512	CHIP TYPE CARBON RESISTOR	RN72K1J-103JE	1	435031034R1
R7513	CHIP TYPE CARBON RESISTOR	RN72K1J-332JE	1	435033324R1
R7517	CHIP TYPE CARBON RESISTOR	RN72K1J-103JE	1	435031034R1
R7518	CHIP TYPE CARBON RESISTOR	RN72K1J-822JE	1	435038224R1
R7521	CHIP TYPE CARBON RESISTOR	RN72K1J-103JE	1	435031034R1
R7522	CHIP TYPE CARBON RESISTOR	RN72K1J-103JE	1	435031034R1
R7523	CHIP TYPE CARBON RESISTOR	RN72K1J-103JE	1	435031034R1
R7524	CHIP TYPE CARBON RESISTOR	RN72K1J-103JE	1	435031034R1
R7533	CHIP TYPE CARBON RESISTOR	RN72K1J-221JE	1	435032214R1
R7541	CHIP TYPE CARBON RESISTOR	RN72K1J-101JE	1	435031014R1
R7542	CHIP TYPE CARBON RESISTOR	RN72K1J-102JE	1	435031024R1
R7550	CHIP TYPE CARBON RESISTOR	RN72K1J-101JE	1	435031014R1
R7551	CHIP TYPE CARBON RESISTOR	RN72K1J-101JE	1	435031014R1
R7601	CHIP TYPE CARBON RESISTOR	RN72K1J-271JE	1	435032714R1
R7602	CHIP TYPE CARBON RESISTOR	RN72K1J-331JE	1	435033314R1
R7603	CHIP TYPE CARBON RESISTOR	RN72K1J-471JE	1	435034714R1
R7604	CHIP TYPE CARBON RESISTOR	RN72K1J-561JE	1	435035614R1
R7605	CHIP TYPE CARBON RESISTOR	RN72K1J-821JE	1	435038214R1
R7606	CHIP TYPE CARBON RESISTOR	RN72K1J-271JE	1	435032714R1
R7607	CHIP TYPE CARBON RESISTOR	RN72K1J-331JE	1	435033314R1
R7608	CHIP TYPE CARBON RESISTOR	RN72K1J-471JE	1	435034714R1
R7609	CHIP TYPE CARBON RESISTOR	RN72K1J-561JE	1	435035614R1
R7610	CHIP TYPE CARBON RESISTOR	RN72K1J-821JE	1	435038214R1
R7611	CHIP TYPE CARBON RESISTOR	RN72K1J-122JE	1	435031224R1
R7612	CHIP TYPE CARBON RESISTOR	RN72K1J-222JE	1	435032224R1
R7613	CHIP TYPE CARBON RESISTOR	RN72K1J-392JE	1	435033924R1
R7614	CHIP TYPE CARBON RESISTOR	RN72K1J-123JE	1	435031234R1
R7615	CHIP TYPE CARBON RESISTOR	RN72K1J-271JE	1	435032714R1
R7616	CHIP TYPE CARBON RESISTOR	RN72K1J-331JE	1	435033314R1
R7617	CHIP TYPE CARBON RESISTOR	RN72K1J-471JE	1	435034714R1
R7618	CHIP TYPE CARBON RESISTOR	RN72K1J-561JE	1	435035614R1
R7619	CHIP TYPE CARBON RESISTOR	RN72K1J-821JE	1	435038214R1
R7620	CHIP TYPE CARBON RESISTOR	RN72K1J-122JE	1	435031224R1
R7621	CHIP TYPE CARBON RESISTOR	RN72K1J-222JE	1	435032224R1
R7622	CHIP TYPE CARBON RESISTOR	RN72K1J-392JE	1	435033924R1
R7623	CHIP TYPE CARBON RESISTOR	RN72K1J-271JE	1	435032714R1

R7624	CHIP TYPE CARBON RESISTOR	RN72K1J-331JE	1	435033314R1	
R7628	CHIP TYPE CARBON RESISTOR	RN72K1J-122JE	1	435031224R1	
R7629	CHIP TYPE CARBON RESISTOR	RN72K1J-222JE	1	435032224R1	
R7630	CHIP TYPE CARBON RESISTOR	RN72K1J-123JE	1	435031234R1	
R7631	CHIP TYPE CARBON RESISTOR	RN72K1J-392JE	1	435033924R1	
R7632	CHIP TYPE CARBON RESISTOR	RN72K1J-392JE	1	435033924R1	
R7633	CHIP TYPE CARBON RESISTOR	RN72K1J-123JE	1	435031234R1	
R7637	CHIP TYPE CARBON RESISTOR	RN72K1J-471JE	1	435034714R1	
R7638	CHIP TYPE CARBON RESISTOR	RN72K1J-561JE	1	435035614R1	
R7639	CHIP TYPE CARBON RESISTOR	RN72K1J-821JE	1	435038214R1	
R7645	CHIP TYPE CARBON RESISTOR	RN72K1J-122JE	1	435031224R1	
R7646	CHIP TYPE CARBON RESISTOR	RN72K1J-222JE	1	435032224R1	
R7652	CHIP TYPE CARBON RESISTOR	RN72K1J-151JE	1	435031514R1	
R7653	CHIP TYPE CARBON RESISTOR	RN72K1J-102JE	1	435031024R1	
R7656	CHIP TYPE CARBON RESISTOR	RN72K1J-392JE	1	435033924R1	
R7751	METAL OXIDE FILM RESISTOR	RS1/2WBJ-390	1	443523914T	
R7752	METAL OXIDE FILM RESISTOR	RS1/2WBJ-390	1	443523914T	
R7801	CHIP TYPE CARBON RESISTOR	RN72K1J-101JE	1	435031014R1	
R7803	CHIP TYPE CARBON RESISTOR	RN72K1J-472JE	1	435034724R1	
R7806	CHIP TYPE CARBON RESISTOR	RN72K1J-222JE	1	435032224R1	
R7809	CHIP TYPE CARBON RESISTOR	RN72K1J-471JE	1	435034714R1	
R7810	CHIP TYPE CARBON RESISTOR	RN72K1J-000JE	1	435030004R1	
R7811	CHIP TYPE CARBON RESISTOR	RN72K1J-391JE	1	435033914R1	
R7812	CHIP TYPE CARBON RESISTOR	RN72K1J-391JE	1	435033914R1	
R7814	CHIP TYPE CARBON RESISTOR	RN72K1J-224JE	1	435032244R1	
R7815	CHIP TYPE CARBON RESISTOR	RN72K1J-391JE	1	435033914R1	
R7816	CHIP TYPE CARBON RESISTOR	RN72K1J-391JE	1	435033914R1	
R7820	CHIP TYPE CARBON RESISTOR	RN72K1J-473JE	1	435034734R1	
R7831	CHIP TYPE CARBON RESISTOR	RN72K1J-221JE	1	435032214R1	
R7833	CHIP TYPE CARBON RESISTOR	RN72K1J-473JE	1	435034734R1	
R7834	CHIP TYPE CARBON RESISTOR	RN72K1J-102JE	1	435031024R1	
R7835	CHIP TYPE CARBON RESISTOR	RN72K1J-333JE	1	435033334R1	
R7950	CHIP TYPE CARBON RESISTOR	RN72K1J-015JE	1	435030154R1	
R7951	METAL OXIDE FILM RESISTOR	RS1WBJ-33	1	443623304T	
R7952	METAL OXIDE FILM RESISTOR	RS1WBJ-22	1	443622204T	
R7960	METAL RESISTOR	RNU1/2WCJ-8.2	1	453530824T	
R7962	CHIP TYPE CARBON RESISTOR	RN72K1J-472JE	1	435034724R1	
R7963	CHIP TYPE CARBON RESISTOR	RN72K1J-472JE	1	435034724R1	
R7964	CHIP TYPE CARBON RESISTOR	RN72K1J-333JE	1	435033334R1	
R7965	CHIP TYPE CARBON RESISTOR	RN72K1J-047JE	1	435030474R1	
R7966	CHIP TYPE CARBON RESISTOR	RN72K1J-473JE	1	435034734R1	
R7967	CHIP TYPE CARBON RESISTOR	RN72K1J-473JE	1	435034734R1	
R7968	CHIP TYPE CARBON RESISTOR	RN72K1J-333JE	1	435033334R1	
R8	CHIP TYPE CARBON RESISTOR	RN72K1J-101JE	1	435031014R1	
R9	CHIP TYPE CARBON RESISTOR	RN72K1J-101JE	1	435031014R1	
R9002	CHIP TYPE CARBON RESISTOR	RN72K1J-000JE	1	435030004R1	
R9003	CHIP TYPE CARBON RESISTOR	RN72K1J-332JE	1	435033324R1	
R9006	CHIP TYPE CARBON RESISTOR	RN72K1J-392JE	1	435033924R1	
R9007	CHIP TYPE CARBON RESISTOR	RN72K1J-273FE	1	435032732R1	
R9008	CHIP TYPE CARBON RESISTOR	RN72K1J-822JE	1	435038224R1	
R9009	CHIP TYPE CARBON RESISTOR	RN72K1J-103JE	1	435031034R1	
R9010	METAL OXIDE FILM RESISTOR	RS1/2WBJ-68	1	443526804T	
R9011	NON-FLAMMABLE CARBON FILM RESISTOR	R25J-22	1	415472204T	
R9012	CHIP TYPE CARBON RESISTOR	RN72K1J-271JE	1	435032714R1	
R9013	CHIP TYPE CARBON RESISTOR	RN72K1J-000JE	1	435030004R1	
R9014	METAL RESISTOR	RNU1WCJ-1	1	453630104T	
R9017	CHIP TYPE CARBON RESISTOR	RN72K1J-332JE	1	435033324R1	
R9018	CHIP TYPE CARBON RESISTOR	RN72K1J-182JE	1	435031824R1	
R9022	CHIP TYPE CARBON RESISTOR	RN72K1J-152JE	1	435031524R1	
R9023	CHIP TYPE CARBON RESISTOR	KTR18EZPF6803	1	435236842R1	
R9024	CHIP TYPE CARBON RESISTOR	KTR18EZPF6803	1	435236842R1	
R9025	CHIP TYPE CARBON RESISTOR	KTR18EZPF6803	1	435236842R1	
R9027	METAL OXIDE FILM RESISTOR	RS1/2WBJ-220	1	443522214T	
[SW TRM]					
F9001	FUSE	T1A-SEUL-T250V	1	252397T	!
F9002C	FUSE HOLDER	NSCT-1P2031	1	25052133T	!
F9002D	FUSE HOLDER	NSCT-1P2031	1	25052133T	!

P1	TERMINAL	NTM-1PDSC437	1	25060515	
P1000	ST JACK	MSJ-035-22	1	25045887	
P1001	PIN JACK	NPJ-1PDO585	1	25045805	
P101A	SOCKET	NSCT-7P2100	1	25052203	
P2	TERMINAL	NTM-2PDML439	1	25060517	
P5502A	SOCKET	NSCT-20P2200	1	25052303	
P5503A	SOCKET	NSCT-19P2199	1	25052302	
P5509B	RETAINER	(CLA-L)	1	27142312	
P5511A	TERMINAL	NTM-1P233(M1969)	1	25060302	
P6000A	SOCKET	NSCT-9P2189	1	25052292	
P6001A	SOCKET	NSCT-9P2189	1	25052292	
P6002A	SOCKET	NSCT-9P2189	1	25052292	
P6005	WIRE HARNESS ASSEMBLY	NSAS-5P2193	1	2009991382UL	
P6005A	WIRE HOL	NSCT-5P896	1	25051109	
P6005Aor	WIRE HOL	CHD-2.5-5	(1)	25053541	
P7001B	SOCKET	NSCT-23P2414	1	25052517	
P7002A	WIRE HOL	NSCT-7P878	1	25051091	
P7002Aor	WIRE HOL	CHD-1.5-7	(1)	25053537	
P7002B	WIRE HOL	NSCT-7P878	1	25051091	
P7002Bor	WIRE HOL	CHD-1.5-7	(1)	25053537	
P7003	WIRE HARNESS ASSEMBLY	NSAS-7P2128	1	2009991317UL	
P7003A	WIRE HOL	NSCT-7P878	1	25051091	
P7003Aor	WIRE HOL	CHD-1.5-7	(1)	25053537	
P7003B	PLUG	NPLG-7P135	1	25055151	
P7751	ST JACK	MSJ-064-05A GR	1	25045782	
P7752	TRM-423(SCREW)	NEJITANSI ST3	1	25060495	
P7802	ST JACK	MSJ-035-05C B AG GR type	1	25045880	
P8002A	SOCKET	IMSA-9850S-26	1	25053213	**N**
P8003A	SOCKET	IMSA-9850S-24	1	25053212	
P8004A	TRM-423(SCREW)	NEJITANSI ST3	1	25060495	
P9001A	PLUG	NPLG-2P631	1	25055675	
P9002	PLUG	NPLG-2P631	1	25055675	
P9003	TRM-423(SCREW)	NEJITANSI ST3	1	25060495	
P9004	RETAINER	(TRM-PS)	1	27142287	
P9011	WIRE HARNESS ASSEMBLY	NSAS-5P2112	1	2009991301UL	
P9011A	WIRE HOL	NSCT-5P876	1	25051089	
P9011Aor	WIRE HOL	CHD-1.5-5	(1)	25053536	
P9501B	PLUG	NPLG-5P119	1	25055135	
P9503A	WIRE HOL	NSCT-5P876	1	25051089	
P9503Aor	WIRE HOL	CHD-1.5-5	(1)	25053536	
P9503B	WIRE HOL	NSCT-5P876	1	25051089	
P9503Bor	WIRE HOL	CHD-1.5-5	(1)	25053536	
RL9001	RELAY	NRL-1P10A-DC9-188	1	25065693	**!**
S7502	ROTARY ENCODER	EVEHD1F3024B	1	25065695W	
S7602	PUSH SWITCH	NPS-111-S681	1	25035718T	
S7605	PUSH SWITCH	NPS-111-S681	1	25035718T	
S7606	PUSH SWITCH	NPS-111-S681	1	25035718T	
S7608	PUSH SWITCH	NPS-111-S681	1	25035718T	
S7609	PUSH SWITCH	NPS-111-S681	1	25035718T	
S7610	PUSH SWITCH	NPS-111-S681	1	25035718T	
S7611	PUSH SWITCH	NPS-111-S681	1	25035718T	
S7612	PUSH SWITCH	NPS-111-S681	1	25035718T	
S7613	PUSH SWITCH	NPS-111-S681	1	25035718T	
S7614	PUSH SWITCH	NPS-111-S681	1	25035718T	
S7616	PUSH SWITCH	NPS-111-S681	1	25035718T	
S7618	PUSH SWITCH	NPS-111-S681	1	25035718T	
S7620	PUSH SWITCH	NPS-111-S681	1	25035718T	
S7622	PUSH SWITCH	NPS-111-S681	1	25035718T	
S7624	PUSH SWITCH	NPS-111-S681	1	25035718T	
S7626	PUSH SWITCH	NPS-111-S681	1	25035718T	
S7628	PUSH SWITCH	NPS-111-S681	1	25035718T	
S7630	PUSH SWITCH	NPS-111-S681	1	25035718T	
S7632	PUSH SWITCH	NPS-111-S681	1	25035718T	
S7634	PUSH SWITCH	NPS-111-S681	1	25035718T	
S7636	PUSH SWITCH	NPS-111-S681	1	25035718T	
S7638	PUSH SWITCH	NPS-111-S681	1	25035718T	
S7640	PUSH SWITCH	NPS-111-S681	1	25035718T	

S7642	PUSH SWITCH	NPS-111-S681	1	25035718T	
S7644	PUSH SWITCH	NPS-111-S681	1	25035718T	
S7646	PUSH SWITCH	NPS-111-S681	1	25035718T	
S7647	PUSH SWITCH	NPS-111-S681	1	25035718T	
S7648	PUSH SWITCH	NPS-111-S681	1	25035718T	
S7649	PUSH SWITCH	NPS-111-S681	1	25035718T	
S7650	PUSH SWITCH	NPS-111-S681	1	25035718T	
S7652	PUSH SWITCH	NPS-111-S681	1	25035718T	
S7654	PUSH SWITCH	NPS-111-S681	1	25035718T	
S7662	PUSH SWITCH	NPS-111-S681	1	25035718T	
S7664	PUSH SWITCH	NPS-111-S681	1	25035718T	
[TUNER UNIT]					
Q1001	PHOTO COUPLER	JSR1165-001recieving	1	24120143	
Q1002	PHOTO COUPLER	JSR1165-001recieving	1	24120143	

U003 BATRM-1754-1G : NSP

CIRCUIT NO	PART NAME	DESCRIPTION	Q'TY	PART NO. (SN)	REMARKS
[SEMI CONDUCTOR]					
D1240	CHIP TYPE DIODE	DA2J10100	1	223303R2	
D1240 or	CHIP TYPE DIODE	1SS352	(1)	223234R2	
D1241	CHIP TYPE DIODE	DA2J10100	1	223303R2	
D1241 or	CHIP TYPE DIODE	1SS352	(1)	223234R2	
D2101	CHIP TYPE DIODE	DA2J10100	1	223303R2	
D2101 or	CHIP TYPE DIODE	1SS352	(1)	223234R2	
D2102	CHIP TYPE DIODE	DA2J10100	1	223303R2	
D2102 or	CHIP TYPE DIODE	1SS352	(1)	223234R2	
D2301	DIODE	G10XB80-02-54A-T	1	22380378	
D2302	CHIP TYPE DIODE	DA2J10100	1	223303R2	
D2302 or	CHIP TYPE DIODE	1SS352	(1)	223234R2	
D2303	CHIP TYPE DIODE	DA2J10100	1	223303R2	
D2303 or	CHIP TYPE DIODE	1SS352	(1)	223234R2	
D2304	ZENER DIODE	DZ2J062M0L	1	224760620R2	
D2304 or	ZENER DIODE	UDZS6.2B	(1)	224550620R2	
D2306	DIODE	RB050M-30GTR	1	22380373R2	
D6600	CHIP TYPE DIODE	DA2J10100	1	223303R2	
D6600 or	CHIP TYPE DIODE	1SS352	(1)	223234R2	
D6601	CHIP TYPE DIODE	DA2J10100	1	223303R2	
D6601 or	CHIP TYPE DIODE	1SS352	(1)	223234R2	
D6604	CHIP TYPE DIODE	DA2J10100	1	223303R2	
D6604 or	CHIP TYPE DIODE	1SS352	(1)	223234R2	
D6606	CHIP TYPE DIODE	DA2J10100	1	223303R2	
D6606 or	CHIP TYPE DIODE	1SS352	(1)	223234R2	
Q1212	TRANSISTOR	INA5001AP1-T111	1	2218030R2	
Q1212 or	TRANSISTOR	KTA1661-Y	(1)	2217864R2	
Q1213	TRANSISTOR	KTA1040D	1	2218210R2	
Q1213 or	TRANSISTOR	2SAR574D	(1)	2218220R2	
Q1214	TRANSISTOR	2SC2712-GR	1	2213145R2	
Q1215	TRANSISTOR	2SC2712-GR	1	2213145R2	
Q1216	TRANSISTOR	INA5001AP1-T111	1	2218030R2	
Q1216 or	TRANSISTOR	KTA1661-Y	(1)	2217864R2	
Q1217	TRANSISTOR	2SC2712-GR	1	2213145R2	
Q1218	TRANSISTOR	2SA1162-GR	1	2214375R2	
Q1219	PHOTO COUPLER	TLP785(BL-TP6_F(C	1	24120173R2	
Q1219 or	PHOTO COUPLER	EL816S1(X)(TA)	(1)	24120172R2	
Q1220	PHOTO COUPLER	TLP785(BL-TP6_F(C	1	24120173R2	
Q1220 or	PHOTO COUPLER	EL816S1(X)(TA)	(1)	24120172R2	
Q1221	TRANSISTOR	2SA1162-GR	1	2214375R2	
Q1222	TRANSISTOR	2SA1162-GR	1	2214375R2	
Q1223	TRANSISTOR	2SA1162-GR	1	2214375R2	
Q1225	PHOTO COUPLER	TLP785(BL-TP6_F(C	1	24120173R2	
Q1225 or	PHOTO COUPLER	EL816S1(X)(TA)	(1)	24120172R2	
Q1226	PHOTO COUPLER	TLP785(BL-TP6_F(C	1	24120173R2	
Q1226 or	PHOTO COUPLER	EL816S1(X)(TA)	(1)	24120172R2	

Q1227	TRANSISTOR	2SA1162-GR	1	2214375R2
Q1228	TRANSISTOR	2SA1162-GR	1	2214375R2
Q1229	TRANSISTOR	2SA1162-GR	1	2214375R2
Q2001	HYBRID IC	NJM41041VC3-TE1	1	22242931R2
Q2002	HYBRID IC	74VHC4053AFT	1	22274053ER2TO
Q2003	HYBRID IC	74VHC4051AFT	1	22274051ER2TO
Q6600	TRANSISTOR	KRC105S	1	2217290R2
Q6600 or	TRANSISTOR	RN1405	(1)	2214500R2
Q6601	TRANSISTOR	KRC105S	1	2217290R2
Q6601 or	TRANSISTOR	RN1405	(1)	2214500R2
Q6604	TRANSISTOR	KRC105S	1	2217290R2
Q6604 or	TRANSISTOR	RN1405	(1)	2214500R2
Q6606	TRANSISTOR	KRC105S	1	2217290R2
Q6606 or	TRANSISTOR	RN1405	(1)	2214500R2
[CHASSIS SCREW]				
D2301C	SCREW	3P+10FN(3BC)	1	82143010GR
[TRANS COIL]				
L2001	CHOKE COIL	LBC2518T470M	1	231364M470R2
[CAPACITOR]				
C1224	UTSP TYPE ELECTROLYTIC CAPACITOR	CE04W25V-100M(UTSP)	1	397551017AT
C1236	CHIP TYPE CERAMIC CAPACITOR	CK725B1H-102K1	1	332101025R1
C1240	CHIP TYPE CERAMIC CAPACITOR	CK725F1E-104Z1	1	332161040R1
C1250	CHIP TYPE CERAMIC CAPACITOR	CK725F1E-104Z1	1	332161040R1
C1281	CHIP TYPE CERAMIC CAPACITOR	CK725B1H-103K1	1	332101035R1
C1283	CHIP TYPE CERAMIC CAPACITOR	CK725F1E-104Z1	1	332161040R1
C2001	CHIP TYPE CERAMIC CAPACITOR	CK725F1E-104Z1	1	332161040R1
C2012	CHIP TYPE CERAMIC CAPACITOR	CK725F1E-104Z1	1	332161040R1
C2014	CHIP TYPE CERAMIC CAPACITOR	CK725F1E-104Z1	1	332161040R1
C2015	CHIP TYPE CERAMIC CAPACITOR	CK725F1E-104Z1	1	332161040R1
C2101	JAMICON TYPE ELECTROLYTIC CAPACITOR	CE04W50V-2.2M	1	398580227T
C2101 or	VR TYPE ELECTROLYTIC CAPACITOR	CE04W50V-2.2M(VR)	(1)	394680227T
C2102	JAMICON TYPE ELECTROLYTIC CAPACITOR	CE04W50V-2.2M	1	398580227T
C2102 or	VR TYPE ELECTROLYTIC CAPACITOR	CE04W50V-2.2M(VR)	(1)	394680227T
C2103	JAMICON TYPE ELECTROLYTIC CAPACITOR	CE04W50V-2.2M	1	398580227T
C2103 or	VR TYPE ELECTROLYTIC CAPACITOR	CE04W50V-2.2M(VR)	(1)	394680227T
C2110	JAMICON TYPE ELECTROLYTIC CAPACITOR	CE04W50V-2.2M	1	398580227T
C2110 or	VR TYPE ELECTROLYTIC CAPACITOR	CE04W50V-2.2M(VR)	(1)	394680227T
C2111	JAMICON TYPE ELECTROLYTIC CAPACITOR	CE04W50V-2.2M	1	398580227T
C2111 or	VR TYPE ELECTROLYTIC CAPACITOR	CE04W50V-2.2M(VR)	(1)	394680227T
C2112	JAMICON TYPE ELECTROLYTIC CAPACITOR	CE04W50V-2.2M	1	398580227T
C2112 or	VR TYPE ELECTROLYTIC CAPACITOR	CE04W50V-2.2M(VR)	(1)	394680227T
C2114	CHIP TYPE CERAMIC CAPACITOR	CK725B1H-102K1	1	332101025R1
C2116	CHIP TYPE CERAMIC CAPACITOR	CK725B1H-103K1	1	332101035R1
C2117	JAMICON TYPE ELECTROLYTIC CAPACITOR	CE04W50V-2.2M	1	398580227T
C2117 or	VR TYPE ELECTROLYTIC CAPACITOR	CE04W50V-2.2M(VR)	(1)	394680227T
C2118	JAMICON TYPE ELECTROLYTIC CAPACITOR	CE04W50V-2.2M	1	398580227T
C2118 or	VR TYPE ELECTROLYTIC CAPACITOR	CE04W50V-2.2M(VR)	(1)	394680227T
C2119	JAMICON TYPE ELECTROLYTIC CAPACITOR	CE04W50V-2.2M	1	398580227T
C2119 or	VR TYPE ELECTROLYTIC CAPACITOR	CE04W50V-2.2M(VR)	(1)	394680227T
C2301	ELECTROLYTIC CAPACITOR	CE69W25V-10000M	1	3504512
C2301 or	ELECTROLYTIC CAPACITOR	CE69W25V-10000M	(1)	3504502
C2302	JAMICON TYPE ELECTROLYTIC CAPACITOR	CE04W50V-4.7M	1	398580477T
C2302 or	VR TYPE ELECTROLYTIC CAPACITOR	CE04W50V-4.7M(VR)	(1)	394680477T
C2303	TF TYPE PLASTIC FILM CAPACITOR	ECQ-V50V-334J	1	374723344T
C2303 or	FILM C	C281H334J20A21A	(1)	376823344T
C2307	UTSP TYPE ELECTROLYTIC CAPACITOR	CE04W10V-220M(UTSP)	1	397532217AT
C6600	CHIP TYPE CERAMIC CAPACITOR	CK725F1H-104Z1	1	332151040R1
C6601	CHIP TYPE CERAMIC CAPACITOR	CK725F1H-104Z1	1	332151040R1
C6602	CHIP TYPE CERAMIC CAPACITOR	CK725F1H-104Z1	1	332151040R1
C6604	CHIP TYPE CERAMIC CAPACITOR	CK725F1H-104Z1	1	332151040R1
C6606	CHIP TYPE CERAMIC CAPACITOR	CK725F1H-104Z1	1	332151040R1
C6650	UMXR TYPE PLASTIC FILM CAPACITOR	1JUMXRTF102JE	1	376591024T
C6651	UMXR TYPE PLASTIC FILM CAPACITOR	1JUMXRTF102JE	1	376591024T
C6652	UMXR TYPE PLASTIC FILM CAPACITOR	1JUMXRTF102JE	1	376591024T
C6653	UMXR TYPE PLASTIC FILM CAPACITOR	1JUMXRTF102JE	1	376591024T
C6654	UMXR TYPE PLASTIC FILM CAPACITOR	1JUMXRTF102JE	1	376591024T
C6655	UMXR TYPE PLASTIC FILM CAPACITOR	1JUMXRTF102JE	1	376591024T

C6656	UMXR TYPE PLASTIC FILM CAPACITOR	1JUMXRTF102JE	1	376591024T	
C6657	UMXR TYPE PLASTIC FILM CAPACITOR	1JUMXRTF102JE	1	376591024T	
C6660	UMXR TYPE PLASTIC FILM CAPACITOR	1JUMXRTF102JE	1	376591024T	
[RESISTOR]					
F2301	FUSE	T4A-SEUL-T250V	1	252392T	!
R1220	CHIP TYPE CARBON RESISTOR	RN72K1J-180JE	1	435031804R1	
R1221	CHIP TYPE CARBON RESISTOR	RN72K1J-103JE	1	435031034R1	
R1222	CHIP TYPE CARBON RESISTOR	RN72K1J-180JE	1	435031804R1	
R1223	CHIP TYPE CARBON RESISTOR	RN72K1J-103JE	1	435031034R1	
R1224	CHIP TYPE CARBON RESISTOR	RN72K1J-180JE	1	435031804R1	
R1225	CHIP TYPE CARBON RESISTOR	RN72K1J-103JE	1	435031034R1	
R1238	CHIP TYPE CARBON RESISTOR	RN72K1J-331JE	1	435033314R1	
R1246	METAL OXIDE FILM RESISTOR	RS1/2WBJ-100	1	443521014T	
R1247	CHIP TYPE CARBON RESISTOR	RN72K1J-331JE	1	435033314R1	
R1248	CHIP TYPE CARBON RESISTOR	RN72K1J-512JE	1	435035124R1	
R1249	CHIP TYPE CARBON RESISTOR	RN72K1J-101JE	1	435031014R1	
R1254	CHIP TYPE CARBON RESISTOR	RN72K1J-180JE	1	435031804R1	
R1257	CHIP TYPE CARBON RESISTOR	RN72K1J-103JE	1	435031034R1	
R1265	CHIP TYPE CARBON RESISTOR	RN72K1J-392JE	1	435033924R1	
R1266	CHIP TYPE CARBON RESISTOR	RN72K1J-224JE	1	435032244R1	
R1267	CHIP TYPE CARBON RESISTOR	RN72K1J-333JE	1	435033334R1	
R1268	CHIP TYPE CARBON RESISTOR	RN72K1J-333JE	1	435033334R1	
R1269	CHIP TYPE CARBON RESISTOR	RN72K1J-333JE	1	435033334R1	
R1270	CHIP TYPE CARBON RESISTOR	RN72K1J-103JE	1	435031034R1	
R1271	CHIP TYPE CARBON RESISTOR	RN72K1J-103JE	1	435031034R1	
R1272	CHIP TYPE CARBON RESISTOR	RN72K1J-103JE	1	435031034R1	
R1273	CHIP TYPE CARBON RESISTOR	RN72K1J-180JE	1	435031804R1	
R1274	CHIP TYPE CARBON RESISTOR	RN72K1J-180JE	1	435031804R1	
R1275	CHIP TYPE CARBON RESISTOR	RN72K1J-103JE	1	435031034R1	
R1276	CHIP TYPE CARBON RESISTOR	RN72K1J-103JE	1	435031034R1	
R1277	CHIP TYPE CARBON RESISTOR	RN72K1J-103JE	1	435031034R1	
R1281	CHIP TYPE CARBON RESISTOR	RN72K1J-331JE	1	435033314R1	
R1282	CHIP TYPE CARBON RESISTOR	RN72K1J-331JE	1	435033314R1	
R2003	CHIP TYPE CARBON RESISTOR	RN72K1J-103JE	1	435031034R1	
R2004	CHIP TYPE CARBON RESISTOR	RN72K1J-103JE	1	435031034R1	
R2005	CHIP TYPE CARBON RESISTOR	RN72K1J-000JE	1	435030004R1	
R2101	CHIP TYPE CARBON RESISTOR	RN72K1J-750JE	1	435037504R1	
R2102	CHIP TYPE CARBON RESISTOR	RN72K1J-750JE	1	435037504R1	
R2103	CHIP TYPE CARBON RESISTOR	RN72K1J-750JE	1	435037504R1	
R2110	CHIP TYPE CARBON RESISTOR	RN72K1J-750JE	1	435037504R1	
R2111	CHIP TYPE CARBON RESISTOR	RN72K1J-750JE	1	435037504R1	
R2112	CHIP TYPE CARBON RESISTOR	RN72K1J-750JE	1	435037504R1	
R2113	CHIP TYPE CARBON RESISTOR	RN72K1J-750JE	1	435037504R1	
R2114	CHIP TYPE CARBON RESISTOR	RN72K1J-750JE	1	435037504R1	
R2115	CHIP TYPE CARBON RESISTOR	RN72K1J-750JE	1	435037504R1	
R2201	CHIP TYPE CARBON RESISTOR	RN72K1J-000JE	1	435030004R1	
R2202	CHIP TYPE CARBON RESISTOR	RN72K1J-000JE	1	435030004R1	
R2203	CHIP TYPE CARBON RESISTOR	RN72K1J-000JE	1	435030004R1	
R2207	CHIP TYPE CARBON RESISTOR	RN72K1J-103JE	1	435031034R1	
R2208	CHIP TYPE CARBON RESISTOR	RN72K1J-103JE	1	435031034R1	
R2209	CHIP TYPE CARBON RESISTOR	RN72K1J-103JE	1	435031034R1	
R2210	CHIP TYPE CARBON RESISTOR	RN72K1J-103JE	1	435031034R1	
R2301	CHIP TYPE CARBON RESISTOR	RN72K1J-103JE	1	435031034R1	
R2302	CHIP TYPE CARBON RESISTOR	RN72K1J-103JE	1	435031034R1	
R6690	METAL OXIDE FILM RESISTOR	RS1/2WBJ-10	1	443521004T	
[SW TRM]					
P1211	SOCKET	MDS-09P-V-01(DSUB9P)	1	25053363	
P1212	ST JACK	HSJ1002-01-6020	1	25045647	
P1213	ST JACK	HSJ1002-01-6020	1	25045647	
P1214	ST JACK	HSJ1002-01-6020	1	25045647	
P2202	PIN JACK	NPJ-9PDGLRY769	1	25046032	
P2800A	SOCKET	NSCT-13P2404	1	25052507	
P6003B	PLUG	NPLG-9P123	1	25055139	
P6005B	PLUG	NPLG-5P119	1	25055135	
P6600	TERMINAL	NTM-4PDMNRR420	1	25060492	
P6600B	PLUG	NPLG-7P121	1	25055137	
P6601	TERMINAL	NTM-2PDMCR400	1	25060472	

P6602	TERMINAL	NTM-4PDMNRR420	1	25060492	
P6604	TERMINAL	NTM-4PDMNRR420	1	25060492	
P6606	TERMINAL	NTM-4PDMNRR420	1	25060492	
P7050A	SOCKET	NSCT-9P2400	1	25052503	
P8001	WIRE HARNESS ASSEMBLY	NSAS-9P2142	1	2009991331UL	
P8001A	WIRE HOL	NSCT-9P880	1	25051093	
P8001Aor	WIRE HOL	CHD-1.5-9	(1)	25053538	N
P9502B	PLUG	NPLG-3P117	1	25055133	
RL6600	RELAY	NRL-2P5A-DC24-129	1	25065563A	
RL6600 or	RELAY	NRL-2P5A-DC24-193	(1)	25065703	
RL6601	RELAY	NRL-2P5A-DC24-129	1	25065563A	
RL6601 or	RELAY	NRL-2P5A-DC24-193	(1)	25065703	
RL6602	RELAY	NRL-2P5A-DC24-129	1	25065563A	
RL6602 or	RELAY	NRL-2P5A-DC24-193	(1)	25065703	
RL6604	RELAY	NRL-2P5A-DC24-129	1	25065563A	
RL6604 or	RELAY	NRL-2P5A-DC24-193	(1)	25065703	
RL6606	RELAY	NRL-2P5A-DC24-129	1	25065563A	
RL6606 or	RELAY	NRL-2P5A-DC24-193	(1)	25065703	
[MECHA PARTS]					
D2301B	HEAT SINK	RAD-083	1	27160271	

U004 BAPRC-1760-1K : NSP

CIRCUIT NC	PART NAME	DESCRIPTION	Q'TY	PART NO. (SN)	REMARKS
[SEMI CONDUCTOR]					
D3000	CHIP TYPE DIODE	DA2J10100	1	223303R2	
D3000 or	CHIP TYPE DIODE	1SS352	(1)	223234R2	
D3001	CHIP TYPE DIODE	DA2J10100	1	223303R2	
D3001 or	CHIP TYPE DIODE	1SS352	(1)	223234R2	
D3002	CHIP TYPE DIODE	DA2J10100	1	223303R2	
D3002 or	CHIP TYPE DIODE	1SS352	(1)	223234R2	
D3003	CHIP TYPE DIODE	DA2J10100	1	223303R2	
D3003 or	CHIP TYPE DIODE	1SS352	(1)	223234R2	
D3402	CHIP TYPE DIODE	DA2J10100	1	223303R2	
D3402 or	CHIP TYPE DIODE	1SS352	(1)	223234R2	
D7001	CHIP TYPE DIODE	DA2J10100	1	223303R2	
D7001 or	CHIP TYPE DIODE	1SS352	(1)	223234R2	
D7002	CHIP TYPE DIODE	DA2J10100	1	223303R2	
D7002 or	CHIP TYPE DIODE	1SS352	(1)	223234R2	
D7003	CHIP TYPE DIODE	DA2J10100	1	223303R2	
D7003 or	CHIP TYPE DIODE	1SS352	(1)	223234R2	
D7004	CHIP TYPE DIODE	DA2J10100	1	223303R2	
D7004 or	CHIP TYPE DIODE	1SS352	(1)	223234R2	
D7006	CHIP TYPE DIODE	DA2J10100	1	223303R2	
D7006 or	CHIP TYPE DIODE	1SS352	(1)	223234R2	
D7007	ZENER DIODE	DZ2J062M0L	1	224760620R2	
D7007 or	ZENER DIODE	UDZS6.2B	(1)	224550620R2	
D7009	CHIP TYPE DIODE	DA2J10100	1	223303R2	
D7009 or	CHIP TYPE DIODE	1SS352	(1)	223234R2	
D8003	ESD	IMSA-6802-01Y901_1608SIZE	1	4000255AR1	
D8151	CHIP TYPE DIODE	DA2J10100	1	223303R2	
D8151 or	CHIP TYPE DIODE	1SS352	(1)	223234R2	
D8301	ZENER DIODE	DZ2J036M0L	1	224760360R2	
D8304	CHIP TYPE DIODE	DA2J10100	1	223303R2	
D8304 or	CHIP TYPE DIODE	1SS352	(1)	223234R2	
D8702	CHIP TYPE DIODE	DA2J10100	1	223303R2	
D8702 or	CHIP TYPE DIODE	1SS352	(1)	223234R2	
D8703	CHIP TYPE DIODE	DA2J10100	1	223303R2	
D8703 or	CHIP TYPE DIODE	1SS352	(1)	223234R2	
D8704	CHIP TYPE DIODE	DA2J10100	1	223303R2	
D8704 or	CHIP TYPE DIODE	1SS352	(1)	223234R2	
D8705	CHIP TYPE DIODE	DA2J10100	1	223303R2	
D8705 or	CHIP TYPE DIODE	1SS352	(1)	223234R2	
D8706	CHIP TYPE DIODE	DA2J10100	1	223303R2	

D8706 or	CHIP TYPE DIODE	1SS352	(1)	223234R2		
D8707	CHIP TYPE DIODE	DA2J10100	1	223303R2		
D8707 or	CHIP TYPE DIODE	1SS352	(1)	223234R2		
D8708	DIODE	CUS357	1	223320R2		
D8708 or	CHIP TYPE DIODE	1SS357	(1)	223281R2		
D8709	DIODE	CUS357	1	223320R2		
D8709 or	CHIP TYPE DIODE	1SS357	(1)	223281R2		
D8710	DIODE	CUS357	1	223320R2		
D8710 or	CHIP TYPE DIODE	1SS357	(1)	223281R2		
D8963	DIODE	RB050M-30GTR	1	22380373R2		
Q1001	HYBRID IC	TC7SZU04FU	1	22242512R2TO		
Q1002	HYBRID IC	PCM5101APWR	1	22242855R2		
Q1003	HYBRID IC	PCM9211PTR	1	22242703R2		
Q1004	HYBRID IC	AK4458VN	1	22242927R2	**N**	
Q1005	HYBRID IC	PCM9211PTR	1	22242703R2		
Q1006	TRANSISTOR	KRC404E	1	2216450R2		
Q1006 or	TRANSISTOR	RN1104	(1)	2218240R2	**N**	
Q1007	HYBRID IC	74VHC4040FT	1	22274040E1R2TO	**N**	
Q1008	HYBRID IC	TC7WH241FU(TE12L_F)	1	22242076R2TO		
Q1090	HYBRID IC	MM3404A50NRE	1	22242701R2		
Q1091	HYBRID IC	S-1333A33-M5T1U3	1	22242934R2	**N**	
Q3001	HYBRID IC	D830K013DZKB400	1	22242851R3		
Q3002	HYBRID IC	TC58DVM92A5TA10B3H	1	222W0125R3		firmware
Q3003	HYBRID IC	A3V56S40GTP-60RX	1	22242891R2		
Q3003 or	HYBRID IC	EM63A165TSB-6G	(1)	22242829R2		
Q3004	HYBRID IC	A3V56S40GTP-60RX	1	22242891R2		
Q3004 or	HYBRID IC	EM63A165TSB-6G	(1)	22242829R2		
Q3005	HYBRID IC	TC7W32FU	1	22241162R2		
Q3006	HYBRID IC	PST803C270NM	1	22242894R2		
Q3070	HYBRID IC	FP6861C-B1AS5CT	1	22242840R2		
Q3071	TRANSISTOR	KRC407E	1	2218350R2		
Q3071 or	TRANSISTOR	RN1107	(1)	2218260R2		
Q3072	TRANSISTOR	KRA307E	1	2218380R2		
Q3072 or	TRANSISTOR	RN2107	(1)	2218290R2	**N**	
Q3100	TRANSISTOR	KRA302E	1	2218360R2		
Q3100 or	TRANSISTOR	RN2102	(1)	2218270R2		
Q3102	TRANSISTOR	KRC405E	1	2218340R2		
Q3102 or	TRANSISTOR	RN1105	(1)	2218250R2		
Q3103	HYBRID IC	S-1333A18-M5T1U3	1	22242956R2	**N**	
Q3105	HYBRID IC	MFI337S3959	1	22242820R2		
Q3108	HYBRID IC	KSZ8081RNBCA	1	22242921R2		
Q3109	HYBRID IC	S-13A1A12-U5T1U3	1	22242841R2		
Q3120	HYBRID IC	FP6861C-B1AS5CT	1	22242840R2		
Q3121	HYBRID IC	FP6861C-B1AS5CT	1	22242840R2		
Q3200	HYBRID IC	74VHC541FT	1	22274541E1R2TO		
Q3202	HYBRID IC	74LCX125FT	1	22274125BR2TO		
Q3203	TRANSISTOR	KRC404E	1	2216450R2		
Q3203 or	TRANSISTOR	RN1104	(1)	2218240R2	**N**	
Q3308	TRANSISTOR	KRC404E	1	2216450R2		
Q3308 or	TRANSISTOR	RN1104	(1)	2218240R2	**N**	
Q3401	HYBRID IC	S25FL164K0XMFI013	1	22242955R2		
Q3404	HYBRID IC	CS49844A-CQZ	1	22242926R3		
Q3406	HYBRID IC	M12L64164A-7TG2Y	1	22242951R3	**N**	
Q3410	TRANSISTOR	KRC404E	1	2216450R2		
Q3410 or	TRANSISTOR	RN1104	(1)	2218240R2	**N**	
Q3412	HYBRID IC	FP6861C-B1AS5CT	1	22242840R2		
Q7001	HYBRID IC	M95640-WMN6TP	1	22242643R2		
Q7001 or	HYBRID IC	BR25S640FJ	(1)	22242761R2		
Q7002	TRANSISTOR	KRA302E	1	2218360R2		
Q7002 or	TRANSISTOR	RN2102	(1)	2218270R2	**N**	
Q7003	TRANSISTOR	KRA302E	1	2218360R2		
Q7003 or	TRANSISTOR	RN2102	(1)	2218270R2	**N**	
Q7004	TRANSISTOR	KRA302E	1	2218360R2		
Q7004 or	TRANSISTOR	RN2102	(1)	2218270R2	**N**	
Q7005	TRANSISTOR	KRC404E	1	2216450R2		
Q7005 or	TRANSISTOR	RN1104	(1)	2218240R2	**N**	
Q7006	TRANSISTOR	KRC404E	1	2216450R2		

	Q7006 or	TRANSISTOR	RN1104	(1)	2218240R2	N	
	Q7007	TRANSISTOR	KRC404E	1	2216450R2		
	Q7007 or	TRANSISTOR	RN1104	(1)	2218240R2	N	
1	Q7009	HYBRID IC	MPD70F3477AGJA-GAE-G	1	222W0117R3		firmware
	Q7010	HYBRID IC	ICL3221ECVZ	1	22242268R2		
	Q7011	TRANSISTOR	KRA307E	1	2218380R2		
	Q7011 or	TRANSISTOR	RN2107	(1)	2218290R2	N	
	Q7012	TRANSISTOR	KRA307E	1	2218380R2		
	Q7012 or	TRANSISTOR	RN2107	(1)	2218290R2	N	
	Q7013	HYBRID IC	TC7WBL3305CFK	1	22242965R2	N	
	Q7014	TRANSISTOR	KRC402E	1	2218330R2		
	Q7014 or	TRANSISTOR	RN1102	(1)	2218230R2	N	
	Q7015	TRANSISTOR	KRC402E	1	2218330R2		
	Q7015 or	TRANSISTOR	RN1102	(1)	2218230R2	N	
	Q7016	TRANSISTOR	KRC405E	1	2218340R2		
	Q7016 or	TRANSISTOR	RN1105	(1)	2218250R2	N	
	Q7017	TRANSISTOR	KRC404E	1	2216450R2		
	Q7017 or	TRANSISTOR	RN1104	(1)	2218240R2	N	
	Q7018	HYBRID IC	S-1333A33-M5T1U3	1	22242934R2	N	
	Q7020	HYBRID IC	PST803C270NM	1	22242894R2		
	Q7021	TRANSISTOR	KRA307E	1	2218380R2		
	Q7021 or	TRANSISTOR	RN2107	(1)	2218290R2		
	Q7023	TRANSISTOR	KRC404E	1	2216450R2		
	Q7023 or	TRANSISTOR	RN1104	(1)	2218240R2		
	Q7027	HYBRID IC	S-1333A33-M5T1U3	1	22242934R2	N	
	Q8000	HYBRID IC	MN864788	1	22242929R3	N	
	Q8003	HYBRID IC	74LCX125FT	1	22274125BR2TO		
	Q8004	TRANSISTOR	2SA1162-GR	1	2214375R2		
	Q8005	TRANSISTOR	KRC404E	1	2216450R2		
	Q8005 or	TRANSISTOR	RN1104	(1)	2218240R2	N	
	Q8032	TRANSISTOR	KRA302E	1	2218360R2		
	Q8032 or	TRANSISTOR	RN2102	(1)	2218270R2	N	
	Q8033	TRANSISTOR	KRC404E	1	2216450R2		
	Q8033 or	TRANSISTOR	RN1104	(1)	2218240R2	N	
1	Q8101	HYBRID IC	W25Q128FVFIG	1	222W0136R2		firmware
	Q8114	HYBRID IC	74LCX125FT	1	22274125BR2TO		
	Q8115	HYBRID IC	74LCX125FT	1	22274125BR2TO		
	Q8151	HYBRID IC	MM3404A50NRE	1	22242701R2		
	Q8202	HYBRID IC	ADV7180KCP32Z-RL	1	22242763R2		
	Q8203	HYBRID IC	S-1333A18-M5T1U3	1	22242956R2	N	
	Q8205	HYBRID IC	S-1333A18-M5T1U3	1	22242956R2	N	
	Q8300	HYBRID IC	S-13A1A13-U5T1U3	1	22242848R2		
	Q8301	HYBRID IC	MM3404A50NRE	1	22242701R2		
	Q8302	HYBRID IC	SII9573CTUC	1	22242762R3		
	Q8303	TRANSISTOR	2SA1162-GR	1	2214375R2		
	Q8307	HYBRID IC	S-1333A13-M5T1U3	1	22242957R2	N	
	Q8700	TRANSISTOR	KRC402E	1	2218330R2		
	Q8700 or	TRANSISTOR	RN1102	(1)	2218230R2	N	
1	Q8701	HYBRID IC	TMPM361F10FG	1	222W0115R3		firmware
	Q8702	HYBRID IC	FR9888CSPCTR	1	22242839R2		
	Q8703	TRANSISTOR	RE1C001UNTCL	1	2218160R2		
	Q8704	TRANSISTOR	KRA307E	1	2218380R2		
	Q8704 or	TRANSISTOR	RN2107	(1)	2218290R2	N	
	Q8705	TRANSISTOR	KRC402E	1	2218330R2		
	Q8705 or	TRANSISTOR	RN1102	(1)	2218230R2	N	
	Q8706	TRANSISTOR	KRC402E	1	2218330R2		
	Q8706 or	TRANSISTOR	RN1102	(1)	2218230R2	N	
	Q8707	TRANSISTOR	KRC402E	1	2218330R2		
	Q8707 or	TRANSISTOR	RN1102	(1)	2218230R2	N	
	Q8708	TRANSISTOR	KRC402E	1	2218330R2		
	Q8708 or	TRANSISTOR	RN1102	(1)	2218230R2	N	
	Q8709	TRANSISTOR	KRC402E	1	2218330R2		
	Q8709 or	TRANSISTOR	RN1102	(1)	2218230R2	N	
	Q8710	TRANSISTOR	2SC2712-GR	1	2213145R2		
	Q8711	TRANSISTOR	INA5001AP1-T111	1	2218030R2		
	Q8712	TRANSISTOR	KRC402E	1	2218330R2		
	Q8712 or	TRANSISTOR	RN1102	(1)	2218230R2	N	

Q8713	TRANSISTOR	KRC402E	1	2218330R2	
Q8713 or	TRANSISTOR	RN1102	(1)	2218230R2	N
Q8714	TRANSISTOR	2SA1162-GR	1	2214375R2	
Q8725	TRANSISTOR	KRC402E	1	2218330R2	
Q8725 or	TRANSISTOR	RN1102	(1)	2218230R2	N
Q8727	TRANSISTOR	KRC402E	1	2218330R2	
Q8727 or	TRANSISTOR	RN1102	(1)	2218230R2	N
Q8729	TRANSISTOR	KRC402E	1	2218330R2	
Q8729 or	TRANSISTOR	RN1102	(1)	2218230R2	N
Q8730	TRANSISTOR	2SC2712-GR	1	2213145R2	
Q8731	TRANSISTOR	2SC2712-GR	1	2213145R2	
Q8732	TRANSISTOR	2SC2712-GR	1	2213145R2	
Q8931	HYBRID IC	FR9888CSPCTR	1	22242839R2	
Q8941	HYBRID IC	FR9888CSPCTR	1	22242839R2	
Q8942	HYBRID IC	TPS22924CYZPR	1	22242807R2	
Q8943	TRANSISTOR	KRC404E	1	2216450R2	
Q8943 or	TRANSISTOR	RN1104	(1)	2218240R2	N
Q8951	HYBRID IC	FR9888CSPCTR	1	22242839R2	
Q8952	HYBRID IC	TPS22924CYZPR	1	22242807R2	
Q8953	TRANSISTOR	KRC404E	1	2216450R2	
Q8953 or	TRANSISTOR	RN1104	(1)	2218240R2	N
Q8961	HYBRID IC	FR9887SPCTR	1	22242935R2	N
[TRANS COIL]					
L1000	CORE	BLM15PX181SN1D	1	2350033R1	
L1001	CORE	BLM15PX181SN1D	1	2350033R1	
L1004	CORE	BK1005LL241-T	1	2350032R1	
L1005	CORE	BK1005LL241-T	1	2350032R1	
L1006	CORE	BK1005LL241-T	1	2350032R1	
L1007	CORE	BK1005LL241-T	1	2350032R1	
L1009	CHOKE COIL	LBC2518T4R7M	1	231364M047R2	
L1010	CHOKE COIL	LBC2518T4R7M	1	231364M047R2	
L1011	CHOKE COIL	LBC2518T4R7M	1	231364M047R2	
L1012	CHOKE COIL	LBC2518T4R7M	1	231364M047R2	
L1013	CHOKE COIL	LBC2518T4R7M	1	231364M047R2	
L1014	CORE	BK1005LL241-T	1	2350032R1	
L1018	CORE	BLM15PX181SN1D	1	2350033R1	
L1019	CORE	BLM15PX181SN1D	1	2350033R1	
L3001	CORE	BLM15PX121SN1D	1	2350034R1	
L3002	CORE	BLM15PX121SN1D	1	2350034R1	
L3003	CORE	BLM15PX121SN1D	1	2350034R1	
L3004	CORE	BLM15PX121SN1D	1	2350034R1	
L3005	CORE	BLM15PX121SN1D	1	2350034R1	
L3006	CHOKE COIL	LBC2518T4R7M	1	231364M047R2	
L3101	CORE	EXC24CH900U	1	2350039R2	
L3102	CORE	BLM15PX181SN1D	1	2350033R1	
L3103	CORE	BLM15PX121SN1D	1	2350034R1	
L3104	CORE	BLM15PX121SN1D	1	2350034R1	
L3105	CORE	BLM15PX121SN1D	1	2350034R1	
L3106	CORE	BLM15PX121SN1D	1	2350034R1	
L3107	CORE	BLM15PX121SN1D	1	2350034R1	
L3108	CORE	BLM15PX121SN1D	1	2350034R1	
L3109	CORE	BLM15PX121SN1D	1	2350034R1	
L3110	CORE	BLM15PX121SN1D	1	2350034R1	
L3111	CORE	BLM15PX121SN1D	1	2350034R1	
L3112	CORE	EXC24CH900U	1	2350039R2	
L3114	CORE	BLM15PX121SN1D	1	2350034R1	
L3145	CORE	DLP2ADN900HL4L	1	230990R2	
L3146	CORE	BLM15PX121SN1D	1	2350034R1	
L3203	CORE	BK1005LL241-T	1	2350032R1	
L3209	CORE	BK1005LL241-T	1	2350032R1	
L3290	CORE	BK1005LL241-T	1	2350032R1	
L3403	CORE	BK1005LL241-T	1	2350032R1	
L3405	CORE	BLM15PX121SN1D	1	2350034R1	
L3406	CORE	BLM15PX330SN1D	1	2350043R1	N
L3407	CORE	BLM15PX121SN1D	1	2350034R1	
L3408	CORE	BLM15PX121SN1D	1	2350034R1	
L3409	CORE	BLM15PX181SN1D	1	2350033R1	

L3411	CORE	BK1005LL241-T	1	2350032R1	
L3412	CORE	BK1005LL241-T	1	2350032R1	
L7002	CORE	BLM15PX181SN1D	1	2350033R1	
L7003	CHOKE COIL	BLM21PG221SN1	1	230949R2	
L7006	CORE	BLM15PX181SN1D	1	2350033R1	
L7007	CORE	BLM15PX181SN1D	1	2350033R1	
L8000	CORE	BK1005LL241-T	1	2350032R1	
L8001	CORE	EXC24CH900U	1	2350039R2	
L8002	CORE	EXC24CH900U	1	2350039R2	
L8003	CORE	EXC24CH900U	1	2350039R2	
L8004	CORE	EXC24CH900U	1	2350039R2	
L8006	CORE	BK1005LL241-T	1	2350032R1	
L8007	CORE	BLM15PX121SN1D	1	2350034R1	
L8008	CORE	BLM15PX121SN1D	1	2350034R1	
L8009	CORE	BLM15PX121SN1D	1	2350034R1	
L8010	CORE	BLM15PX121SN1D	1	2350034R1	
L8011	CORE	BLM15PX121SN1D	1	2350034R1	
L8012	CORE	BLM15PX121SN1D	1	2350034R1	
L8013	CORE	BLM15PX121SN1D	1	2350034R1	
L8014	CORE	BLM15PX121SN1D	1	2350034R1	
L8015	CORE	BLM15PX121SN1D	1	2350034R1	
L8016	CORE	BLM15PX121SN1D	1	2350034R1	
L8021	CORE	EXC24CH900U	1	2350039R2	
L8022	CORE	EXC24CH900U	1	2350039R2	
L8023	CORE	EXC24CH900U	1	2350039R2	
L8024	CORE	EXC24CH900U	1	2350039R2	
L8152	CORE	BLM15PX121SN1D	1	2350034R1	
L8153	CORE	BLM15PX181SN1D	1	2350033R1	
L8154	CORE	BLM15PX181SN1D	1	2350033R1	
L8157	CORE	BLM15PX181SN1D	1	2350033R1	
L8158	CORE	BLM15PX181SN1D	1	2350033R1	
L8202	CORE	BLM15PX181SN1D	1	2350033R1	
L8205	CORE	BLM15PX181SN1D	1	2350033R1	
L8207	CORE	BLM15PX181SN1D	1	2350033R1	
L8210	CORE	BLM15PX181SN1D	1	2350033R1	
L8302	CORE	BLM15PX181SN1D	1	2350033R1	
L8303	CORE	BLM15PX181SN1D	1	2350033R1	
L8304	CORE	BLM15PX181SN1D	1	2350033R1	
L8305	CORE	BLM15PX181SN1D	1	2350033R1	
L8306	CORE	BLM15PX181SN1D	1	2350033R1	
L8307	CORE	BLM15PX181SN1D	1	2350033R1	
L8308	CORE	BLM15PX181SN1D	1	2350033R1	
L8310	CORE	BLM15PX181SN1D	1	2350033R1	
L8700	CHOKE COIL	BLM21PG221SN1	1	230949R2	
L8702	CORE	BLM15PX181SN1D	1	2350033R1	
L8703	CHOKE COIL	1255AS-100M	1	231482M100R2	**N**
L8704	CHOKE COIL	BLM21PG221SN1	1	230949R2	
L8705	CHOKE COIL	BLM21PG221SN1	1	230949R2	
L8710	CORE	BLM15PX181SN1D	1	2350033R1	
L8931	CHOKE COIL	BLM21PG221SN1	1	230949R2	
L8932	CHOKE COIL	1255AS-100M	1	231482M100R2	**N**
L8941	CHOKE COIL	BLM21PG221SN1	1	230949R2	
L8942	CHOKE COIL	1255AS-100M	1	231482M100R2	**N**
L8951	CHOKE COIL	BLM21PG221SN1	1	230949R2	
L8952	CHOKE COIL	1255AS-100M	1	231482M100R2	**N**
L8961	CHOKE COIL	BLM21PG221SN1	1	230949R2	
L8962	CHOKE COIL	1255AS-100M	1	231482M100R2	**N**
L8965	CORE	BLM15PX181SN1D	1	2350033R1	
X1001	CRYSTAL	HC-49S 9C22.5792M	1	3010535R2	
X3001	CRYSTAL	HC-49S 9C20.0000M	1	3010514R2	
X3401	CRYSTAL	HC-49S 9C24.5760M	1	3010516R2	
X7001	CRYSTAL	CSTCR4M00G53-R0	1	3010536R2	**N**
X8031	CRYSTAL	HC-49S 9C27.0000M	1	3010518R2	
X8201	CRYSTAL	HC-49S 9C28.6363M	1	3010519R2	
X8301	CRYSTAL	HC-49S 9C27.0000M	1	3010518R2	
X8701	CERAMIC RESONATOR	CSTCE8M00G55-R0	1	3010416R2	
[CAPACITOR]					

C1000	CHIP ELECT C	CECS6.3V-22M	1	398622207R2	**N**
C1000 or	CHIP ELECT C	CEWX6.3V-22M	(1)	398122207R2	
C1001	CHIP TYPE CERAMIC CAPACITOR	CK725B1C-104K0	1	332011045R1	
C1002	CHIP TYPE CERAMIC CAPACITOR	CK725B1C-104K0	1	332011045R1	
C1004	CHIP TYPE CERAMIC CAPACITOR	CK725B1C-104K0	1	332011045R1	
C1005	CHIP ELECT C	CECS6.3V-22M	1	398622207R2	**N**
C1005 or	CHIP ELECT C	CEWX6.3V-22M	(1)	398122207R2	
C1006	CHIP TYPE CERAMIC CAPACITOR	CK725B1C-104K0	1	332011045R1	
C1007	CHIP ELECT C	CECS6.3V-22M	1	398622207R2	**N**
C1007 or	CHIP ELECT C	CEWX6.3V-22M	(1)	398122207R2	
C1008	CHIP TYPE CERAMIC CAPACITOR	CC725CH1H-150J0	1	342031504R1	
C1009	CHIP TYPE CERAMIC CAPACITOR	CC725CH1H-120J0	1	342031204R1	
C1010	CHIP TYPE CERAMIC CAPACITOR	CK725B1C-104K0	1	332011045R1	
C1011	CHIP TYPE CERAMIC CAPACITOR	CK725B1C-104K0	1	332011045R1	
C1012	CHIP ELECT C	CECS4V-220M	1	3986G2217R2	**N**
C1012 or	CHIP ELECT C	CEWX4V-220M	(1)	3981G2217R2	
C1013	CHIP TYPE CERAMIC CAPACITOR	CK725B1C-104K0	1	332011045R1	
C1014	CHIP TYPE CERAMIC CAPACITOR	CK725B1C-104K0	1	332011045R1	
C1015	CHIP TYPE CERAMIC CAPACITOR	CK725B1C-104K0	1	332011045R1	
C1016	CHIP TYPE CERAMIC CAPACITOR	CK725B1C-104K0	1	332011045R1	
C1017	CHIP ELECT C	CECS16V-100M	1	398641017R2	**N**
C1017 or	CHIP ELECT C	CEWX16V-100M	(1)	398141017R2	
C1018	CHIP TYPE CERAMIC CAPACITOR	CK725B1C-104K0	1	332011045R1	
C1019	CHIP TYPE CERAMIC CAPACITOR	CK732B16V-106K	1	332071065R2	
C1020	CHIP ELECT C	CECS4V-220M	1	3986G2217R2	**N**
C1020 or	CHIP ELECT C	CEWX4V-220M	(1)	3981G2217R2	
C1021	CHIP TYPE CERAMIC CAPACITOR	CK725B1H-472K0	1	332034725R1	
C1022	CHIP ELECT C	CE32W16V-47M(EC-PC)	1	3500238R2	**N**
C1023	CHIP ELECT C	CECS16V-100M	1	398641017R2	**N**
C1023 or	CHIP ELECT C	CEWX16V-100M	(1)	398141017R2	
C1024	CHIP TYPE CERAMIC CAPACITOR	CK732B16V-106K	1	332071065R2	
C1025	CHIP TYPE CERAMIC CAPACITOR	CK725B1H-223K0	1	332032235R1	
C1026	CHIP TYPE CERAMIC CAPACITOR	CK725B1E-473K0	1	332024735R1	
C1027	CHIP ELECT C	CECS4V-220M	1	3986G2217R2	**N**
C1027 or	CHIP ELECT C	CEWX4V-220M	(1)	3981G2217R2	
C1030	CHIP TYPE CERAMIC CAPACITOR	CK732B16V-106K	1	332071065R2	
C1031	CHIP ELECT C	CECS6.3V-22M	1	398622207R2	**N**
C1031 or	CHIP ELECT C	CEWX6.3V-22M	(1)	398122207R2	
C1032	CHIP TYPE CERAMIC CAPACITOR	CK725B1A-105K0	1	332001055R1	
C1033	CHIP TYPE CERAMIC CAPACITOR	CK725B1A-105K0	1	332001055R1	
C1037	CHIP TYPE CERAMIC CAPACITOR	CK732B16V-106K	1	332071065R2	
C1038	CHIP TYPE CERAMIC CAPACITOR	CK725B1H-102K0	1	332031025R1	
C1040	CHIP TYPE CERAMIC CAPACITOR	CK725B1H-472K0	1	332034725R1	
C1051	CHIP TYPE CERAMIC CAPACITOR	CK725B1C-104K0	1	332011045R1	
C1052	CHIP TYPE CERAMIC CAPACITOR	CK725B1C-104K0	1	332011045R1	
C1053	CHIP TYPE CERAMIC CAPACITOR	CK725B1C-104K0	1	332011045R1	
C1054	CHIP TYPE CERAMIC CAPACITOR	CK725B1A-225K1	1	332132255R1	
C1055	CHIP TYPE CERAMIC CAPACITOR	CK725B1A-225K1	1	332132255R1	
C1056	CHIP TYPE CERAMIC CAPACITOR	CK725B1C-104K0	1	332011045R1	
C1057	CHIP TYPE CERAMIC CAPACITOR	CK732B16V-106K	1	332071065R2	
C1058	CHIP TYPE CERAMIC CAPACITOR	CK725B1H-103K0	1	332031035R1	
C1059	CHIP TYPE CERAMIC CAPACITOR	CK725B1H-103K0	1	332031035R1	
C1062	CHIP TYPE CERAMIC CAPACITOR	CK725B1H-223K0	1	332032235R1	
C1063	CHIP TYPE CERAMIC CAPACITOR	CK725B1E-473K0	1	332024735R1	
C1068	CHIP TYPE CERAMIC CAPACITOR	CK725B1C-104K0	1	332011045R1	
C1069	CHIP TYPE CERAMIC CAPACITOR	CK725B1C-104K0	1	332011045R1	
C1071	CHIP TYPE CERAMIC CAPACITOR	CK725B1C-104K0	1	332011045R1	
C1072	CHIP TYPE CERAMIC CAPACITOR	CK725B1C-104K0	1	332011045R1	
C1073	CHIP TYPE CERAMIC CAPACITOR	CK725B1C-104K0	1	332011045R1	
C1074	CHIP TYPE CERAMIC CAPACITOR	CK725B1C-104K0	1	332011045R1	
C1075	CHIP TYPE CERAMIC CAPACITOR	CK725B1C-104K0	1	332011045R1	
C1079	CHIP TYPE CERAMIC CAPACITOR	CK725B1C-104K0	1	332011045R1	
C1091	CHIP TYPE CERAMIC CAPACITOR	CK725B0J-226M	1	332092267R2	
C1092	CHIP TYPE CERAMIC CAPACITOR	CK732B16V-106K	1	332071065R2	
C1093	CHIP TYPE CERAMIC CAPACITOR	CK732B16V-106K	1	332071065R2	
C1094	CHIP TYPE CERAMIC CAPACITOR	CK732B16V-106K	1	332071065R2	
C3001	CHIP TYPE CERAMIC CAPACITOR	CK725B1A-105K0	1	332001055R1	

C3002	CHIP TYPE CERAMIC CAPACITOR	CK725B1A-105K0	1	332001055R1
C3003	CHIP TYPE CERAMIC CAPACITOR	CK732B16V-106K	1	332071065R2
C3004	CHIP TYPE CERAMIC CAPACITOR	CK732B16V-106K	1	332071065R2
C3005	CHIP TYPE CERAMIC CAPACITOR	CK725B1A-105K0	1	332001055R1
C3006	CHIP TYPE CERAMIC CAPACITOR	CK725B1H-102K0	1	332031025R1
C3007	CHIP TYPE CERAMIC CAPACITOR	CK725B1A-105K0	1	332001055R1
C3008	CHIP TYPE CERAMIC CAPACITOR	CK725B1H-102K0	1	332031025R1
C3009	CHIP TYPE CERAMIC CAPACITOR	CK725B1A-105K0	1	332001055R1
C3010	CHIP TYPE CERAMIC CAPACITOR	CK725B1A-105K0	1	332001055R1
C3011	CHIP TYPE CERAMIC CAPACITOR	CK725B1A-105K0	1	332001055R1
C3012	CHIP TYPE CERAMIC CAPACITOR	CK725B1H-102K0	1	332031025R1
C3013	CHIP TYPE CERAMIC CAPACITOR	CK725B1A-105K0	1	332001055R1
C3014	CHIP TYPE CERAMIC CAPACITOR	CK725B1H-102K0	1	332031025R1
C3015	CHIP TYPE CERAMIC CAPACITOR	CK725B1H-102K0	1	332031025R1
C3016	CHIP TYPE CERAMIC CAPACITOR	CK725B1A-105K0	1	332001055R1
C3017	CHIP TYPE CERAMIC CAPACITOR	CK725B1A-105K0	1	332001055R1
C3018	CHIP TYPE CERAMIC CAPACITOR	CK725B1A-105K0	1	332001055R1
C3019	CHIP TYPE CERAMIC CAPACITOR	CK725B1H-102K0	1	332031025R1
C3020	CHIP TYPE CERAMIC CAPACITOR	CK725B1A-105K0	1	332001055R1
C3021	CHIP TYPE CERAMIC CAPACITOR	CK725B1A-105K0	1	332001055R1
C3022	CHIP TYPE CERAMIC CAPACITOR	CK725B1A-105K0	1	332001055R1
C3023	CHIP TYPE CERAMIC CAPACITOR	CK732B16V-106K	1	332071065R2
C3024	CHIP TYPE CERAMIC CAPACITOR	CK725B1H-102K0	1	332031025R1
C3025	CHIP TYPE CERAMIC CAPACITOR	CK725B1A-105K0	1	332001055R1
C3026	CHIP TYPE CERAMIC CAPACITOR	CK725B1C-104K0	1	332011045R1
C3027	CHIP TYPE CERAMIC CAPACITOR	CK725B1H-102K0	1	332031025R1
C3028	CHIP TYPE CERAMIC CAPACITOR	CK725B1A-105K0	1	332001055R1
C3029	CHIP TYPE CERAMIC CAPACITOR	CK725B1H-102K0	1	332031025R1
C3030	CHIP TYPE CERAMIC CAPACITOR	CK725B1A-105K0	1	332001055R1
C3031	CHIP TYPE CERAMIC CAPACITOR	CK725B1A-105K0	1	332001055R1
C3032	CHIP TYPE CERAMIC CAPACITOR	CK725B1H-102K0	1	332031025R1
C3033	CHIP TYPE CERAMIC CAPACITOR	CK725B1A-105K0	1	332001055R1
C3034	CHIP TYPE CERAMIC CAPACITOR	CC725CH1H-270J0	1	342032704R1
C3035	CHIP TYPE CERAMIC CAPACITOR	CK725B1H-102K0	1	332031025R1
C3036	CHIP TYPE CERAMIC CAPACITOR	CC725CH1H-270J0	1	342032704R1
C3037	CHIP TYPE CERAMIC CAPACITOR	CK725B1A-105K0	1	332001055R1
C3038	CHIP TYPE CERAMIC CAPACITOR	CK725B1A-105K0	1	332001055R1
C3039	CHIP TYPE CERAMIC CAPACITOR	CK725B1H-103K0	1	332031035R1
C3040	CHIP TYPE CERAMIC CAPACITOR	CK725B1A-105K0	1	332001055R1
C3041	CHIP TYPE CERAMIC CAPACITOR	CK732B16V-106K	1	332071065R2
C3042	CHIP TYPE CERAMIC CAPACITOR	CK725B1A-105K0	1	332001055R1
C3043	CHIP TYPE CERAMIC CAPACITOR	CK725B1A-105K0	1	332001055R1
C3070	CHIP TYPE CERAMIC CAPACITOR	CK725B0J-226M	1	332092267R2
C3071	CHIP TYPE CERAMIC CAPACITOR	CK725B0J-226M	1	332092267R2
C3072	CHIP TYPE CERAMIC CAPACITOR	CK732B16V-106K	1	332071065R2
C3101	CHIP TYPE CERAMIC CAPACITOR	CK732B16V-106K	1	332071065R2
C3102	CHIP TYPE CERAMIC CAPACITOR	CK725B0J-226M	1	332092267R2
C3103	CHIP TYPE CERAMIC CAPACITOR	CK725B1H-102K0	1	332031025R1
C3105	CHIP TYPE CERAMIC CAPACITOR	CK725B1A-105K0	1	332001055R1
C3106	CHIP TYPE CERAMIC CAPACITOR	CK732B16V-106K	1	332071065R2
C3107	CHIP TYPE CERAMIC CAPACITOR	CK725B1A-105K0	1	332001055R1
C3108	CHIP TYPE CERAMIC CAPACITOR	CK725B1A-105K0	1	332001055R1
C3109	CHIP TYPE CERAMIC CAPACITOR	CK732B16V-106K	1	332071065R2
C3110	CHIP TYPE CERAMIC CAPACITOR	CK725B1A-224K0	1	332002245R1
C3111	CHIP TYPE CERAMIC CAPACITOR	CK732B16V-106K	1	332071065R2
C3112	CHIP TYPE CERAMIC CAPACITOR	CK732B16V-106K	1	332071065R2
C3113	CHIP TYPE CERAMIC CAPACITOR	CK725B1A-105K0	1	332001055R1
C3114	CHIP TYPE CERAMIC CAPACITOR	CK725B1A-105K0	1	332001055R1
C3115	CHIP TYPE CERAMIC CAPACITOR	CK732B16V-106K	1	332071065R2
C3116	CHIP TYPE CERAMIC CAPACITOR	CK732B16V-106K	1	332071065R2
C3117	CHIP TYPE CERAMIC CAPACITOR	CK725B1C-104K0	1	332011045R1
C3121	CHIP TYPE CERAMIC CAPACITOR	CK725B1A-105K0	1	332001055R1
C3122	CHIP TYPE CERAMIC CAPACITOR	CK725B1A-105K0	1	332001055R1
C3126	CHIP TYPE CERAMIC CAPACITOR	CK732B16V-106K	1	332071065R2
C3127	CHIP TYPE CERAMIC CAPACITOR	CK725B1A-105K0	1	332001055R1
C3128	CHIP TYPE CERAMIC CAPACITOR	CK725B1A-105K0	1	332001055R1
C3129	CHIP TYPE CERAMIC CAPACITOR	CK725B1A-105K0	1	332001055R1

C3130	CHIP TYPE CERAMIC CAPACITOR	CK725B0J-226M	1	332092267R2
C3131	CHIP TYPE CERAMIC CAPACITOR	CK725B1A-105K0	1	332001055R1
C3133	CHIP TYPE CERAMIC CAPACITOR	CK725B1A-105K0	1	332001055R1
C3136	CHIP TYPE CERAMIC CAPACITOR	CK725B1A-105K0	1	332001055R1
C3137	CHIP TYPE CERAMIC CAPACITOR	CK725B1A-105K0	1	332001055R1
C3138	CHIP TYPE CERAMIC CAPACITOR	CK725B1A-105K0	1	332001055R1
C3139	CHIP TYPE CERAMIC CAPACITOR	CK725B1C-104K0	1	332011045R1
C3140	CHIP TYPE CERAMIC CAPACITOR	CK725B1A-105K0	1	332001055R1
C3141	CHIP TYPE CERAMIC CAPACITOR	CK725B1C-104K0	1	332011045R1
C3142	CHIP TYPE CERAMIC CAPACITOR	CK725B1A-105K0	1	332001055R1
C3143	CHIP TYPE CERAMIC CAPACITOR	CK725B1C-104K0	1	332011045R1
C3144	CHIP TYPE CERAMIC CAPACITOR	CK725B1C-104K0	1	332011045R1
C3148	CHIP TYPE CERAMIC CAPACITOR	CK725B1C-104K0	1	332011045R1
C3149	CHIP TYPE CERAMIC CAPACITOR	CK725B1H-102K0	1	332031025R1
C3152	CHIP TYPE CERAMIC CAPACITOR	CK725B0J-226M	1	332092267R2
C3153	CHIP TYPE CERAMIC CAPACITOR	CK732B16V-106K	1	332071065R2
C3154	CHIP TYPE CERAMIC CAPACITOR	CK725B1A-105K0	1	332001055R1
C3155	CHIP TYPE CERAMIC CAPACITOR	CK732B16V-106K	1	332071065R2
C3156	CHIP TYPE CERAMIC CAPACITOR	CK725B1A-105K0	1	332001055R1
C3157	CHIP TYPE CERAMIC CAPACITOR	CK725B1A-105K0	1	332001055R1
C3158	CHIP TYPE CERAMIC CAPACITOR	CK725B1A-105K0	1	332001055R1
C3159	CHIP TYPE CERAMIC CAPACITOR	CK725B1A-105K0	1	332001055R1
C3160	CHIP TYPE CERAMIC CAPACITOR	CK725B1A-105K0	1	332001055R1
C3161	CHIP TYPE CERAMIC CAPACITOR	CK725B1A-105K0	1	332001055R1
C3162	CHIP TYPE CERAMIC CAPACITOR	CK725B1H-102K0	1	332031025R1
C3163	CHIP TYPE CERAMIC CAPACITOR	CK725B0J-226M	1	332092267R2
C3164	CHIP TYPE CERAMIC CAPACITOR	CK725B1H-102K0	1	332031025R1
C3165	CHIP TYPE CERAMIC CAPACITOR	CK725B0J-226M	1	332092267R2
C3166	CHIP TYPE CERAMIC CAPACITOR	CK732B16V-106K	1	332071065R2
C3171	CHIP TYPE CERAMIC CAPACITOR	CK725B1H-103K0	1	332031035R1
C3181	CHIP TYPE CERAMIC CAPACITOR	CK725B1A-225K1	1	332132255R1
C3182	CHIP TYPE CERAMIC CAPACITOR	CK725B0J-226M	1	332092267R2
C3183	CHIP TYPE CERAMIC CAPACITOR	CK725B0J-226M	1	332092267R2
C3201	CHIP TYPE CERAMIC CAPACITOR	CK725B1C-104K0	1	332011045R1
C3203	CHIP TYPE CERAMIC CAPACITOR	CK725B1C-104K0	1	332011045R1
C3324	CHIP TYPE CERAMIC CAPACITOR	CK732B16V-106K	1	332071065R2
C3325	CHIP TYPE CERAMIC CAPACITOR	CK725B1A-105K0	1	332001055R1
C3401	CHIP TYPE CERAMIC CAPACITOR	CC725CH1H-331J0	1	342033314R1
C3402	CHIP TYPE CERAMIC CAPACITOR	CK725B1C-104K0	1	332011045R1
C3403	CHIP TYPE CERAMIC CAPACITOR	CK725B1C-104K0	1	332011045R1
C3404	CHIP TYPE CERAMIC CAPACITOR	CK725B1C-104K0	1	332011045R1
C3405	CHIP TYPE CERAMIC CAPACITOR	CK725B1C-104K0	1	332011045R1
C3406	CHIP TYPE CERAMIC CAPACITOR	CK725B1A-105K0	1	332001055R1
C3410	CHIP TYPE CERAMIC CAPACITOR	CK725B1C-104K0	1	332011045R1
C3411	CHIP TYPE CERAMIC CAPACITOR	CK725B1C-104K0	1	332011045R1
C3412	CHIP TYPE CERAMIC CAPACITOR	CK725B1C-104K0	1	332011045R1
C3413	CHIP TYPE CERAMIC CAPACITOR	CC725CH1H-120J0	1	342031204R1
C3414	CHIP TYPE CERAMIC CAPACITOR	CC725CH1H-150J0	1	342031504R1
C3415	CHIP TYPE CERAMIC CAPACITOR	CK725B1C-104K0	1	332011045R1
C3416	CHIP TYPE CERAMIC CAPACITOR	CK725B1C-104K0	1	332011045R1
C3418	CHIP TYPE CERAMIC CAPACITOR	CK725B1C-104K0	1	332011045R1
C3419	CHIP TYPE CERAMIC CAPACITOR	CK725B1C-104K0	1	332011045R1
C3420	CHIP TYPE CERAMIC CAPACITOR	CK725B1C-104K0	1	332011045R1
C3422	CHIP TYPE CERAMIC CAPACITOR	CK725B1C-104K0	1	332011045R1
C3423	CHIP TYPE CERAMIC CAPACITOR	CK725B1C-104K0	1	332011045R1
C3424	CHIP TYPE CERAMIC CAPACITOR	CK725B1C-104K0	1	332011045R1
C3425	CHIP TYPE CERAMIC CAPACITOR	CK725B1C-104K0	1	332011045R1
C3426	CHIP TYPE CERAMIC CAPACITOR	CK725B1H-102K0	1	332031025R1
C3427	CHIP TYPE CERAMIC CAPACITOR	CK725B1C-104K0	1	332011045R1
C3428	CHIP TYPE CERAMIC CAPACITOR	CK725B1H-102K0	1	332031025R1
C3429	CHIP TYPE CERAMIC CAPACITOR	CK725B1C-104K0	1	332011045R1
C3431	CHIP TYPE CERAMIC CAPACITOR	CK725B1H-102K0	1	332031025R1
C3432	CHIP TYPE CERAMIC CAPACITOR	CK725B1H-102K0	1	332031025R1
C3433	CHIP TYPE CERAMIC CAPACITOR	CK725B1A-105K0	1	332001055R1
C3434	CHIP TYPE CERAMIC CAPACITOR	CK732B16V-106K	1	332071065R2
C3435	CHIP TYPE CERAMIC CAPACITOR	CK732B16V-106K	1	332071065R2
C3436	CHIP TYPE CERAMIC CAPACITOR	CK732B16V-106K	1	332071065R2

C3437	CHIP TYPE CERAMIC CAPACITOR	CK725B1C-104K0	1	332011045R1
C3438	CHIP TYPE CERAMIC CAPACITOR	CK725B1C-104K0	1	332011045R1
C3439	CHIP TYPE CERAMIC CAPACITOR	CK725B1C-104K0	1	332011045R1
C3440	CHIP TYPE CERAMIC CAPACITOR	CK725B1C-104K0	1	332011045R1
C3441	CHIP TYPE CERAMIC CAPACITOR	CK725B1A-105K0	1	332001055R1
C3442	CHIP TYPE CERAMIC CAPACITOR	CK732B16V-106K	1	332071065R2
C3443	CHIP TYPE CERAMIC CAPACITOR	CK725B1A-105K0	1	332001055R1
C3444	CHIP TYPE CERAMIC CAPACITOR	CK725B1A-105K0	1	332001055R1
C3445	CHIP TYPE CERAMIC CAPACITOR	CK725B1A-105K0	1	332001055R1
C3446	CHIP TYPE CERAMIC CAPACITOR	CK725B1A-105K0	1	332001055R1
C3457	CHIP TYPE CERAMIC CAPACITOR	CK725B1A-105K0	1	332001055R1
C3458	CHIP TYPE CERAMIC CAPACITOR	CK725B1A-105K0	1	332001055R1
C3459	CHIP TYPE CERAMIC CAPACITOR	CK725B1A-105K0	1	332001055R1
C3462	CHIP TYPE CERAMIC CAPACITOR	CK732B16V-106K	1	332071065R2
C7002	CHIP TYPE CERAMIC CAPACITOR	CK725B1H-102K0	1	332031025R1
C7003	CHIP TYPE CERAMIC CAPACITOR	CK725B1H-102K0	1	332031025R1
C7004	CHIP TYPE CERAMIC CAPACITOR	CK725B1C-104K0	1	332011045R1
C7005	CHIP TYPE CERAMIC CAPACITOR	CK725B1C-104K0	1	332011045R1
C7008	CHIP TYPE CERAMIC CAPACITOR	CK725B50V-224K	1	332242245R1
C7009	CHIP TYPE CERAMIC CAPACITOR	CK725B1A-105K0	1	332001055R1
C7010	CHIP TYPE CERAMIC CAPACITOR	CK725B50V-224K	1	332242245R1
C7011	CHIP TYPE CERAMIC CAPACITOR	CK725B1A-105K0	1	332001055R1
C7012	CHIP TYPE CERAMIC CAPACITOR	CK725B50V-224K	1	332242245R1
C7013	CHIP TYPE CERAMIC CAPACITOR	CK725B1A-105K0	1	332001055R1
C7014	CHIP TYPE CERAMIC CAPACITOR	CK725B1C-104K0	1	332011045R1
C7015	CHIP TYPE CERAMIC CAPACITOR	CK725B1C-104K0	1	332011045R1
C7016	CHIP TYPE CERAMIC CAPACITOR	CK725B1C-104K0	1	332011045R1
C7017	CHIP TYPE CERAMIC CAPACITOR	CK725B1C-104K0	1	332011045R1
C7018	CHIP TYPE CERAMIC CAPACITOR	CK725B1C-104K0	1	332011045R1
C7019	CHIP TYPE CERAMIC CAPACITOR	CK725B1C-104K0	1	332011045R1
C7020	CHIP TYPE CERAMIC CAPACITOR	CK725B1A-475K1	1	332134755R1
C7021	CHIP TYPE CERAMIC CAPACITOR	CK725B1C-104K0	1	332011045R1
C7024	CHIP TYPE CERAMIC CAPACITOR	CK725B1C-104K0	1	332011045R1
C7025	CHIP TYPE CERAMIC CAPACITOR	CK732B16V-106K	1	332071065R2
C7027	CHIP TYPE CERAMIC CAPACITOR	CK725B1C-104K0	1	332011045R1
C7028	CHIP TYPE CERAMIC CAPACITOR	CK732B16V-106K	1	332071065R2
C7029	CHIP TYPE CERAMIC CAPACITOR	CK732B16V-106K	1	332071065R2
C7030	CHIP TYPE CERAMIC CAPACITOR	CK725B1H-102K0	1	332031025R1
C7031	CHIP TYPE CERAMIC CAPACITOR	CK725B1H-102K0	1	332031025R1
C7032	CHIP TYPE CERAMIC CAPACITOR	CK725B1C-104K0	1	332011045R1
C7036	CHIP TYPE CERAMIC CAPACITOR	CK725B1C-104K0	1	332011045R1
C7037	CHIP TYPE CERAMIC CAPACITOR	CK725B0J-226M	1	332092267R2
C7038	CHIP TYPE CERAMIC CAPACITOR	CK732B16V-106K	1	332071065R2
C7039	CHIP TYPE CERAMIC CAPACITOR	CK732B16V-106K	1	332071065R2
C7050	CHIP TYPE CERAMIC CAPACITOR	CK725B50V-224K	1	332242245R1
C7051	CHIP TYPE CERAMIC CAPACITOR	CK725B1A-105K0	1	332001055R1
C7052	CHIP TYPE CERAMIC CAPACITOR	CK725B1H-102K0	1	332031025R1
C7062	CHIP TYPE CERAMIC CAPACITOR	CK732B16V-106K	1	332071065R2
C7180	CHIP TYPE CERAMIC CAPACITOR	CK725B1H-102K0	1	332031025R1
C7181	CHIP TYPE CERAMIC CAPACITOR	CK725B1H-102K0	1	332031025R1
C7182	CHIP TYPE CERAMIC CAPACITOR	CK725B1H-102K0	1	332031025R1
C7183	CHIP TYPE CERAMIC CAPACITOR	CK725B1H-102K0	1	332031025R1
C7184	CHIP TYPE CERAMIC CAPACITOR	CK725B1A-105K0	1	332001055R1
C8000	CHIP TYPE CERAMIC CAPACITOR	CK725B1C-104K0	1	332011045R1
C8001	CHIP TYPE CERAMIC CAPACITOR	CK725B1H-102K0	1	332031025R1
C8002	CHIP TYPE CERAMIC CAPACITOR	CK725B1H-102K0	1	332031025R1
C8003	CHIP TYPE CERAMIC CAPACITOR	CK725B1A-105K0	1	332001055R1
C8004	CHIP TYPE CERAMIC CAPACITOR	CK725B1A-105K0	1	332001055R1
C8005	CHIP TYPE CERAMIC CAPACITOR	CK725B1A-105K0	1	332001055R1
C8012	CHIP TYPE CERAMIC CAPACITOR	CK725B1C-104K0	1	332011045R1
C8013	CHIP TYPE CERAMIC CAPACITOR	CK725B1C-104K0	1	332011045R1
C8014	CHIP TYPE CERAMIC CAPACITOR	CK725B1C-104K0	1	332011045R1
C8015	CHIP TYPE CERAMIC CAPACITOR	CK725B1C-104K0	1	332011045R1
C8016	CHIP TYPE CERAMIC CAPACITOR	CK725B1C-104K0	1	332011045R1
C8017	CHIP TYPE CERAMIC CAPACITOR	CK725B1C-104K0	1	332011045R1
C8018	CHIP TYPE CERAMIC CAPACITOR	CK725B1C-104K0	1	332011045R1
C8020	CHIP TYPE CERAMIC CAPACITOR	CK725B1C-104K0	1	332011045R1

C8021	CHIP TYPE CERAMIC CAPACITOR	CK725B1H-102K0	1	332031025R1
C8022	CHIP TYPE CERAMIC CAPACITOR	CK725B1H-102K0	1	332031025R1
C8023	CHIP TYPE CERAMIC CAPACITOR	CK725B1A-105K0	1	332001055R1
C8024	CHIP TYPE CERAMIC CAPACITOR	CK725B1A-105K0	1	332001055R1
C8025	CHIP TYPE CERAMIC CAPACITOR	CK725B1A-105K0	1	332001055R1
C8026	CHIP TYPE CERAMIC CAPACITOR	CK725B1C-104K0	1	332011045R1
C8028	CHIP TYPE CERAMIC CAPACITOR	CK725B1C-104K0	1	332011045R1
C8029	CHIP TYPE CERAMIC CAPACITOR	CK732B16V-106K	1	332071065R2
C8030	CHIP TYPE CERAMIC CAPACITOR	CK732B16V-106K	1	332071065R2
C8031	CHIP TYPE CERAMIC CAPACITOR	CK725B1C-104K0	1	332011045R1
C8032	CHIP TYPE CERAMIC CAPACITOR	CK725B1C-104K0	1	332011045R1
C8033	CHIP TYPE CERAMIC CAPACITOR	CK725B1C-104K0	1	332011045R1
C8034	CHIP TYPE CERAMIC CAPACITOR	CK725B1C-104K0	1	332011045R1
C8035	CHIP TYPE CERAMIC CAPACITOR	CK725B1C-104K0	1	332011045R1
C8036	CHIP TYPE CERAMIC CAPACITOR	CK725B1C-104K0	1	332011045R1
C8037	CHIP TYPE CERAMIC CAPACITOR	CK725B1C-104K0	1	332011045R1
C8038	CHIP TYPE CERAMIC CAPACITOR	CK725B1C-104K0	1	332011045R1
C8039	CHIP TYPE CERAMIC CAPACITOR	CK725B1C-104K0	1	332011045R1
C8040	CHIP TYPE CERAMIC CAPACITOR	CK732B16V-106K	1	332071065R2
C8041	CHIP TYPE CERAMIC CAPACITOR	CK725B1C-104K0	1	332011045R1
C8042	CHIP TYPE CERAMIC CAPACITOR	CK725B1C-104K0	1	332011045R1
C8043	CHIP TYPE CERAMIC CAPACITOR	CK725B1C-104K0	1	332011045R1
C8044	CHIP TYPE CERAMIC CAPACITOR	CK725B1C-104K0	1	332011045R1
C8045	CHIP TYPE CERAMIC CAPACITOR	CK725B1C-104K0	1	332011045R1
C8046	CHIP TYPE CERAMIC CAPACITOR	CK725B1C-104K0	1	332011045R1
C8047	CHIP TYPE CERAMIC CAPACITOR	CK732B16V-106K	1	332071065R2
C8048	CHIP TYPE CERAMIC CAPACITOR	CK732B16V-106K	1	332071065R2
C8051	CHIP TYPE CERAMIC CAPACITOR	CK725B1C-104K0	1	332011045R1
C8052	CHIP TYPE CERAMIC CAPACITOR	CK725B1C-104K0	1	332011045R1
C8053	CHIP TYPE CERAMIC CAPACITOR	CK725B1C-104K0	1	332011045R1
C8055	CHIP TYPE CERAMIC CAPACITOR	CK725B1C-104K0	1	332011045R1
C8056	CHIP TYPE CERAMIC CAPACITOR	CK725B1C-104K0	1	332011045R1
C8057	CHIP TYPE CERAMIC CAPACITOR	CK725B1C-104K0	1	332011045R1
C8061	CHIP TYPE CERAMIC CAPACITOR	CK725B1C-104K0	1	332011045R1
C8063	CHIP TYPE CERAMIC CAPACITOR	CK725B1C-104K0	1	332011045R1
C8064	CHIP TYPE CERAMIC CAPACITOR	CK725B1C-104K0	1	332011045R1
C8071	CHIP TYPE CERAMIC CAPACITOR	CK725B1C-104K0	1	332011045R1
C8072	CHIP TYPE CERAMIC CAPACITOR	CK725B1C-104K0	1	332011045R1
C8073	CHIP TYPE CERAMIC CAPACITOR	CK725B1C-104K0	1	332011045R1
C8074	CHIP TYPE CERAMIC CAPACITOR	CK725B1C-104K0	1	332011045R1
C8075	CHIP TYPE CERAMIC CAPACITOR	CK725B1C-104K0	1	332011045R1
C8077	CHIP TYPE CERAMIC CAPACITOR	CK725B1C-104K0	1	332011045R1
C8078	CHIP TYPE CERAMIC CAPACITOR	CK725B1C-104K0	1	332011045R1
C8079	CHIP TYPE CERAMIC CAPACITOR	CK725B1C-104K0	1	332011045R1
C8091	CHIP TYPE CERAMIC CAPACITOR	CK725B1C-104K0	1	332011045R1
C8092	CHIP TYPE CERAMIC CAPACITOR	CK725B1C-104K0	1	332011045R1
C8093	CHIP TYPE CERAMIC CAPACITOR	CK725B1C-104K0	1	332011045R1
C8094	CHIP TYPE CERAMIC CAPACITOR	CC725CH1H-101J0	1	342031014R1
C8095	CHIP TYPE CERAMIC CAPACITOR	CC725CH1H-120J0	1	342031204R1
C8096	CHIP TYPE CERAMIC CAPACITOR	CC725CH1H-120J0	1	342031204R1
C8101	CHIP TYPE CERAMIC CAPACITOR	CK732B16V-106K	1	332071065R2
C8102	CHIP TYPE CERAMIC CAPACITOR	CK725B1C-104K0	1	332011045R1
C8103	CHIP TYPE CERAMIC CAPACITOR	CK732B16V-106K	1	332071065R2
C8104	CHIP TYPE CERAMIC CAPACITOR	CK725B1A-105K0	1	332001055R1
C8105	CHIP TYPE CERAMIC CAPACITOR	CK725B1A-105K0	1	332001055R1
C8106	CHIP TYPE CERAMIC CAPACITOR	CK725B1A-105K0	1	332001055R1
C8107	CHIP TYPE CERAMIC CAPACITOR	CK725B1A-105K0	1	332001055R1
C8113	CHIP TYPE CERAMIC CAPACITOR	CK725B1C-104K0	1	332011045R1
C8154	CHIP TYPE CERAMIC CAPACITOR	CK732B16V-106K	1	332071065R2
C8155	CHIP TYPE CERAMIC CAPACITOR	CK732B16V-106K	1	332071065R2
C8156	CHIP TYPE CERAMIC CAPACITOR	CK732B16V-106K	1	332071065R2
C8157	CHIP TYPE CERAMIC CAPACITOR	CK725B1A-105K0	1	332001055R1
C8158	CHIP TYPE CERAMIC CAPACITOR	CK725B0J-226M	1	332092267R2
C8160	CHIP TYPE CERAMIC CAPACITOR	CK725B1A-105K0	1	332001055R1
C8161	CHIP TYPE CERAMIC CAPACITOR	CK732B16V-106K	1	332071065R2
C8162	CHIP TYPE CERAMIC CAPACITOR	CK725B1A-105K0	1	332001055R1
C8163	CHIP TYPE CERAMIC CAPACITOR	CK732B16V-106K	1	332071065R2

C8165	CHIP TYPE CERAMIC CAPACITOR	CK732B16V-106K	1	332071065R2
C8167	CHIP TYPE CERAMIC CAPACITOR	CK732B16V-106K	1	332071065R2
C8168	CHIP TYPE CERAMIC CAPACITOR	CK725B1A-105K0	1	332001055R1
C8169	CHIP TYPE CERAMIC CAPACITOR	CK732B16V-106K	1	332071065R2
C8170	CHIP TYPE CERAMIC CAPACITOR	CK725B1A-105K0	1	332001055R1
C8171	CHIP TYPE CERAMIC CAPACITOR	CK732B16V-106K	1	332071065R2
C8206	CHIP TYPE CERAMIC CAPACITOR	CK725B1C-104K0	1	332011045R1
C8207	CHIP TYPE CERAMIC CAPACITOR	CK725B1H-102K0	1	332031025R1
C8208	CHIP TYPE CERAMIC CAPACITOR	CK725B1C-104K0	1	332011045R1
C8210	CHIP TYPE CERAMIC CAPACITOR	CK725B1C-104K0	1	332011045R1
C8211	CHIP TYPE CERAMIC CAPACITOR	CK725B1C-104K0	1	332011045R1
C8214	CHIP TYPE CERAMIC CAPACITOR	CK725B1C-104K0	1	332011045R1
C8215	CHIP TYPE CERAMIC CAPACITOR	CK732B16V-106K	1	332071065R2
C8219	CHIP TYPE CERAMIC CAPACITOR	CK725B1H-103K0	1	332031035R1
C8220	CHIP TYPE CERAMIC CAPACITOR	CK725B1C-104K0	1	332011045R1
C8221	CHIP TYPE CERAMIC CAPACITOR	CK725B1H-102K0	1	332031025R1
C8222	CHIP TYPE CERAMIC CAPACITOR	CK725B1C-104K0	1	332011045R1
C8223	CHIP TYPE CERAMIC CAPACITOR	CK725B1C-104K0	1	332011045R1
C8224	CHIP TYPE CERAMIC CAPACITOR	CK725B1C-104K0	1	332011045R1
C8225	CHIP TYPE CERAMIC CAPACITOR	CK725B1C-104K0	1	332011045R1
C8229	CHIP TYPE CERAMIC CAPACITOR	CK725B1H-102K0	1	332031025R1
C8230	CHIP TYPE CERAMIC CAPACITOR	CK725B1C-104K0	1	332011045R1
C8231	CHIP TYPE CERAMIC CAPACITOR	CK725B1C-104K0	1	332011045R1
C8232	CHIP TYPE CERAMIC CAPACITOR	CK725B1H-103K0	1	332031035R1
C8236	CHIP TYPE CERAMIC CAPACITOR	CC725CH1H-150J0	1	342031504R1
C8237	CHIP TYPE CERAMIC CAPACITOR	CC725CH1H-120J0	1	342031204R1
C8239	CHIP TYPE CERAMIC CAPACITOR	CK725B1H-103K0	1	332031035R1
C8240	CHIP TYPE CERAMIC CAPACITOR	CK725B1C-683K0	1	332016835R1
C8241	CHIP TYPE CERAMIC CAPACITOR	CK725B1E-153K0	1	332021535R1
C8245	CHIP TYPE CERAMIC CAPACITOR	CK732B16V-106K	1	332071065R2
C8251	CHIP TYPE CERAMIC CAPACITOR	CK725B1C-104K0	1	332011045R1
C8252	CHIP TYPE CERAMIC CAPACITOR	CK725B1H-103K0	1	332031035R1
C8253	CHIP TYPE CERAMIC CAPACITOR	CK725B1C-104K0	1	332011045R1
C8254	CHIP TYPE CERAMIC CAPACITOR	CK725B1A-105K0	1	332001055R1
C8255	CHIP TYPE CERAMIC CAPACITOR	CK732B16V-106K	1	332071065R2
C8256	CHIP TYPE CERAMIC CAPACITOR	CK725B1A-105K0	1	332001055R1
C8257	CHIP TYPE CERAMIC CAPACITOR	CK732B16V-106K	1	332071065R2
C8258	CHIP TYPE CERAMIC CAPACITOR	CK725B1A-105K0	1	332001055R1
C8259	CHIP TYPE CERAMIC CAPACITOR	CK725B1H-103K0	1	332031035R1
C8260	CHIP TYPE CERAMIC CAPACITOR	CK732B16V-106K	1	332071065R2
C8261	CHIP TYPE CERAMIC CAPACITOR	CK732B16V-106K	1	332071065R2
C8301	CHIP TYPE CERAMIC CAPACITOR	CK732B16V-106K	1	332071065R2
C8303	CHIP TYPE CERAMIC CAPACITOR	CK725B0J-226M	1	332092267R2
C8305	CHIP TYPE CERAMIC CAPACITOR	CK725B1H-102K0	1	332031025R1
C8306	CHIP TYPE CERAMIC CAPACITOR	CK725B1C-104K0	1	332011045R1
C8307	CHIP TYPE CERAMIC CAPACITOR	CK725B1H-102K0	1	332031025R1
C8308	CHIP TYPE CERAMIC CAPACITOR	CK725B1C-104K0	1	332011045R1
C8309	CHIP TYPE CERAMIC CAPACITOR	CK725B1H-102K0	1	332031025R1
C8310	CHIP TYPE CERAMIC CAPACITOR	CK725B1C-104K0	1	332011045R1
C8311	CHIP TYPE CERAMIC CAPACITOR	CK725B1H-102K0	1	332031025R1
C8312	CHIP TYPE CERAMIC CAPACITOR	CK725B1C-104K0	1	332011045R1
C8313	CHIP TYPE CERAMIC CAPACITOR	CK725B1H-102K0	1	332031025R1
C8314	CHIP TYPE CERAMIC CAPACITOR	CK725B1C-104K0	1	332011045R1
C8315	CHIP TYPE CERAMIC CAPACITOR	CK725B1H-102K0	1	332031025R1
C8316	CHIP TYPE CERAMIC CAPACITOR	CK725B1C-104K0	1	332011045R1
C8317	CHIP TYPE CERAMIC CAPACITOR	CK725B1H-102K0	1	332031025R1
C8318	CHIP TYPE CERAMIC CAPACITOR	CK725B1C-104K0	1	332011045R1
C8319	CHIP TYPE CERAMIC CAPACITOR	CK725B1C-104K0	1	332011045R1
C8320	CHIP TYPE CERAMIC CAPACITOR	CK725B1H-102K0	1	332031025R1
C8321	CHIP TYPE CERAMIC CAPACITOR	CC725CH1H-090D0	1	342030902R1
C8322	CHIP TYPE CERAMIC CAPACITOR	CK725B1H-102K0	1	332031025R1
C8323	CHIP TYPE CERAMIC CAPACITOR	CK725B1C-104K0	1	332011045R1
C8324	CHIP TYPE CERAMIC CAPACITOR	CK725B1C-104K0	1	332011045R1
C8325	CHIP TYPE CERAMIC CAPACITOR	CC725CH1H-090D0	1	342030902R1
C8326	CHIP TYPE CERAMIC CAPACITOR	CK725B1H-102K0	1	332031025R1
C8327	CHIP TYPE CERAMIC CAPACITOR	CK725B1H-102K0	1	332031025R1
C8328	CHIP TYPE CERAMIC CAPACITOR	CK725B1C-104K0	1	332011045R1

C8329	CHIP TYPE CERAMIC CAPACITOR	CK725B1H-102K0	1	332031025R1
C8330	CHIP TYPE CERAMIC CAPACITOR	CK725B1C-104K0	1	332011045R1
C8331	CHIP TYPE CERAMIC CAPACITOR	CK725B1C-104K0	1	332011045R1
C8332	CHIP TYPE CERAMIC CAPACITOR	CK725B1A-105K0	1	332001055R1
C8333	CHIP TYPE CERAMIC CAPACITOR	CK725B1H-102K0	1	332031025R1
C8334	CHIP TYPE CERAMIC CAPACITOR	CK725B1C-104K0	1	332011045R1
C8335	CHIP TYPE CERAMIC CAPACITOR	CK725B1H-102K0	1	332031025R1
C8336	CHIP TYPE CERAMIC CAPACITOR	CK725B1C-104K0	1	332011045R1
C8338	CHIP TYPE CERAMIC CAPACITOR	CK725B1H-102K0	1	332031025R1
C8339	CHIP TYPE CERAMIC CAPACITOR	CK725B1H-102K0	1	332031025R1
C8340	CHIP TYPE CERAMIC CAPACITOR	CK725B1C-104K0	1	332011045R1
C8341	CHIP TYPE CERAMIC CAPACITOR	CK725B1H-102K0	1	332031025R1
C8342	CHIP TYPE CERAMIC CAPACITOR	CK725B1C-104K0	1	332011045R1
C8343	CHIP TYPE CERAMIC CAPACITOR	CK725B1H-102K0	1	332031025R1
C8344	CHIP TYPE CERAMIC CAPACITOR	CK725B1C-104K0	1	332011045R1
C8345	CHIP TYPE CERAMIC CAPACITOR	CK725B1H-102K0	1	332031025R1
C8349	CHIP TYPE CERAMIC CAPACITOR	CK725B1A-105K0	1	332001055R1
C8350	CHIP TYPE CERAMIC CAPACITOR	CK725B1A-105K0	1	332001055R1
C8351	CHIP TYPE CERAMIC CAPACITOR	CK725B1A-105K0	1	332001055R1
C8352	CHIP TYPE CERAMIC CAPACITOR	CK732B16V-106K	1	332071065R2
C8353	CHIP TYPE CERAMIC CAPACITOR	CK725B1C-104K0	1	332011045R1
C8354	CHIP TYPE CERAMIC CAPACITOR	CK725B1A-105K0	1	332001055R1
C8355	CHIP TYPE CERAMIC CAPACITOR	CK725B1A-105K0	1	332001055R1
C8356	CHIP TYPE CERAMIC CAPACITOR	CK732B16V-106K	1	332071065R2
C8357	CHIP TYPE CERAMIC CAPACITOR	CK732B16V-106K	1	332071065R2
C8358	CHIP TYPE CERAMIC CAPACITOR	CK725B1H-102K0	1	332031025R1
C8359	CHIP TYPE CERAMIC CAPACITOR	CK732B16V-106K	1	332071065R2
C8360	CHIP TYPE CERAMIC CAPACITOR	CK725B1C-104K0	1	332011045R1
C8361	CHIP TYPE CERAMIC CAPACITOR	CK725B1H-102K0	1	332031025R1
C8362	CHIP TYPE CERAMIC CAPACITOR	CK725B1C-104K0	1	332011045R1
C8363	CHIP TYPE CERAMIC CAPACITOR	CK725B1H-102K0	1	332031025R1
C8364	CHIP TYPE CERAMIC CAPACITOR	CK725B1H-102K0	1	332031025R1
C8365	CHIP TYPE CERAMIC CAPACITOR	CK725B1A-105K0	1	332001055R1
C8366	CHIP TYPE CERAMIC CAPACITOR	CK732B16V-106K	1	332071065R2
C8367	CHIP TYPE CERAMIC CAPACITOR	CK732B16V-106K	1	332071065R2
C8368	CHIP TYPE CERAMIC CAPACITOR	CK732B16V-106K	1	332071065R2
C8369	CHIP TYPE CERAMIC CAPACITOR	CK725B1H-102K0	1	332031025R1
C8370	CHIP TYPE CERAMIC CAPACITOR	CK725B1A-105K0	1	332001055R1
C8371	CHIP TYPE CERAMIC CAPACITOR	CK732B16V-106K	1	332071065R2
C8384	CHIP TYPE CERAMIC CAPACITOR	CK732B16V-106K	1	332071065R2
C8385	CHIP TYPE CERAMIC CAPACITOR	CK725B1C-104K0	1	332011045R1
C8601	CHIP TYPE CERAMIC CAPACITOR	CK725B1H-102K0	1	332031025R1
C8602	CHIP TYPE CERAMIC CAPACITOR	CK725B1H-102K0	1	332031025R1
C8611	CHIP TYPE CERAMIC CAPACITOR	CK725B1H-102K0	1	332031025R1
C8612	CHIP TYPE CERAMIC CAPACITOR	CK725B1H-102K0	1	332031025R1
C8621	CHIP TYPE CERAMIC CAPACITOR	CK725B1H-102K0	1	332031025R1
C8622	CHIP TYPE CERAMIC CAPACITOR	CK725B1H-102K0	1	332031025R1
C8631	CHIP TYPE CERAMIC CAPACITOR	CK725B1H-102K0	1	332031025R1
C8632	CHIP TYPE CERAMIC CAPACITOR	CK725B1H-102K0	1	332031025R1
C8641	CHIP TYPE CERAMIC CAPACITOR	CK725B1H-102K0	1	332031025R1
C8642	CHIP TYPE CERAMIC CAPACITOR	CK725B1H-102K0	1	332031025R1
C8651	CHIP TYPE CERAMIC CAPACITOR	CK725B1H-102K0	1	332031025R1
C8652	CHIP TYPE CERAMIC CAPACITOR	CK725B1H-102K0	1	332031025R1
C8661	CHIP TYPE CERAMIC CAPACITOR	CK725B1H-102K0	1	332031025R1
C8662	CHIP TYPE CERAMIC CAPACITOR	CK725B1H-102K0	1	332031025R1
C8701	CHIP TYPE CERAMIC CAPACITOR	CK725B1C-104K0	1	332011045R1
C8702	CHIP TYPE CERAMIC CAPACITOR	CK725B1C-104K0	1	332011045R1
C8703	CHIP TYPE CERAMIC CAPACITOR	CK725B1C-104K0	1	332011045R1
C8704	CHIP TYPE CERAMIC CAPACITOR	CK725B1C-104K0	1	332011045R1
C8705	CHIP TYPE CERAMIC CAPACITOR	CK725B1A-105K0	1	332001055R1
C8706	CHIP TYPE CERAMIC CAPACITOR	CK725B1C-104K0	1	332011045R1
C8707	CHIP TYPE CERAMIC CAPACITOR	CK725B1C-104K0	1	332011045R1
C8708	CHIP TYPE CERAMIC CAPACITOR	CK732B16V-106K	1	332071065R2
C8709	CHIP TYPE CERAMIC CAPACITOR	CK732B16V-106K	1	332071065R2
C8710	CHIP TYPE CERAMIC CAPACITOR	CK732B16V-106K	1	332071065R2
C8711	CHIP TYPE CERAMIC CAPACITOR	CK725B1H-103K0	1	332031035R1
C8712	CHIP TYPE CERAMIC CAPACITOR	CK725B1C-104K0	1	332011045R1

C8713	CHIP TYPE CERAMIC CAPACITOR	CK725B1E-106K	1	332221065R2
C8714	CHIP TYPE CERAMIC CAPACITOR	CK725B1E-106K	1	332221065R2
C8715	CHIP TYPE CERAMIC CAPACITOR	CK725B1H-103K0	1	332031035R1
C8716	CHIP TYPE CERAMIC CAPACITOR	CK725B0J-226M	1	332092267R2
C8717	CHIP TYPE CERAMIC CAPACITOR	CK725B0J-226M	1	332092267R2
C8719	CHIP TYPE CERAMIC CAPACITOR	CK725B0J-226M	1	332092267R2
C8902	CHIP TYPE CERAMIC CAPACITOR	CK725B1E-106K	1	332221065R2
C8903	CHIP TYPE CERAMIC CAPACITOR	CK725B1E-106K	1	332221065R2
C8918	CHIP TYPE CERAMIC CAPACITOR	CK725B0J-226M	1	332092267R2
C8931	CHIP TYPE CERAMIC CAPACITOR	CK725B1H-103K0	1	332031035R1
C8932	CHIP TYPE CERAMIC CAPACITOR	CK725B1C-104K0	1	332011045R1
C8933	CHIP TYPE CERAMIC CAPACITOR	CK725B1E-106K	1	332221065R2
C8934	CHIP TYPE CERAMIC CAPACITOR	CK725B1E-106K	1	332221065R2
C8935	CHIP TYPE CERAMIC CAPACITOR	CK725B1H-103K0	1	332031035R1
C8936	CHIP TYPE CERAMIC CAPACITOR	CK725B0J-226M	1	332092267R2
C8937	CHIP TYPE CERAMIC CAPACITOR	CK725B0J-226M	1	332092267R2
C8941	CHIP TYPE CERAMIC CAPACITOR	CK725B1H-103K0	1	332031035R1
C8942	CHIP TYPE CERAMIC CAPACITOR	CK725B1C-104K0	1	332011045R1
C8943	CHIP TYPE CERAMIC CAPACITOR	CK725B1E-106K	1	332221065R2
C8944	CHIP TYPE CERAMIC CAPACITOR	CK725B1E-106K	1	332221065R2
C8945	CHIP TYPE CERAMIC CAPACITOR	CK725B1H-103K0	1	332031035R1
C8946	CHIP TYPE CERAMIC CAPACITOR	CK725B0J-226M	1	332092267R2
C8947	CHIP TYPE CERAMIC CAPACITOR	CK725B0J-226M	1	332092267R2
C8951	CHIP TYPE CERAMIC CAPACITOR	CK725B1H-103K0	1	332031035R1
C8952	CHIP TYPE CERAMIC CAPACITOR	CK725B1C-104K0	1	332011045R1
C8953	CHIP TYPE CERAMIC CAPACITOR	CK725B1E-106K	1	332221065R2
C8954	CHIP TYPE CERAMIC CAPACITOR	CK725B1E-106K	1	332221065R2
C8955	CHIP TYPE CERAMIC CAPACITOR	CK725B1H-103K0	1	332031035R1
C8956	CHIP TYPE CERAMIC CAPACITOR	CK725B0J-226M	1	332092267R2
C8957	CHIP TYPE CERAMIC CAPACITOR	CK725B0J-226M	1	332092267R2
C8961	CHIP TYPE CERAMIC CAPACITOR	CK725B1H-103K0	1	332031035R1
C8962	CHIP TYPE CERAMIC CAPACITOR	CK725B1C-104K0	1	332011045R1
C8963	CHIP TYPE CERAMIC CAPACITOR	CK725B1E-106K	1	332221065R2
C8964	CHIP TYPE CERAMIC CAPACITOR	CK725B1E-106K	1	332221065R2
C8966	CHIP TYPE CERAMIC CAPACITOR	CK725B0J-226M	1	332092267R2
C8967	CHIP TYPE CERAMIC CAPACITOR	CK725B0J-226M	1	332092267R2
C8980	CHIP TYPE CERAMIC CAPACITOR	CK725B1A-105K0	1	332001055R1
C8981	CHIP TYPE CERAMIC CAPACITOR	CK732B16V-106K	1	332071065R2
C8982	CHIP TYPE CERAMIC CAPACITOR	CK725B1A-105K0	1	332001055R1
C8983	CHIP TYPE CERAMIC CAPACITOR	CK732B16V-106K	1	332071065R2
[RESISTOR]				
R1000	CHIP TYPE CARBON RESISTOR	RN72K1J-000JE	1	435030004R1
R1001	CHIP TYPE CARBON RESISTOR	RN72K1J-331JE	1	435033314R1
R1002	CHIP TYPE CARBON RESISTOR	RN72K1J-151JE	1	435031514R1
R1003	CHIP TYPE CARBON RESISTOR	RN72K1J-151JE	1	435031514R1
R1004	CHIP TYPE CARBON RESISTOR	RN72K1J-151JE	1	435031514R1
R1005	CHIP TYPE CARBON RESISTOR	RN72K1J-331JE	1	435033314R1
R1006	CHIP TYPE CARBON RESISTOR	RN72K1J-560JE	1	435035604R1
R1007	CHIP TYPE CARBON RESISTOR	RN72K1J-105JE	1	435031054R1
R1008	CHIP TYPE CARBON RESISTOR	RN72K1J-152JE	1	435031524R1
R1009	CHIP TYPE CARBON RESISTOR	RN72K1J-000JE	1	435030004R1
R1010	CHIP TYPE CARBON RESISTOR	RN72K1J-103JE	1	435031034R1
R1011	CHIP TYPE CARBON RESISTOR	RN72K1J-220JE	1	435032204R1
R1012	CHIP TYPE CARBON RESISTOR	RN72K1J-220JE	1	435032204R1
R1013	CHIP TYPE CARBON RESISTOR	RN72K1J-220JE	1	435032204R1
R1014	CHIP TYPE CARBON RESISTOR	RN72K1J-220JE	1	435032204R1
R1015	CHIP TYPE CARBON RESISTOR	RN72K1J-220JE	1	435032204R1
R1016	CHIP TYPE CARBON RESISTOR	RN72K1J-220JE	1	435032204R1
R1017	CHIP TYPE CARBON RESISTOR	RN72K1J-470JE	1	435034704R1
R1018	CHIP TYPE CARBON RESISTOR	RN72K1J-000JE	1	435030004R1
R1019	CHIP TYPE CARBON RESISTOR	RN72K1J-470JE	1	435034704R1
R1020	CHIP TYPE CARBON RESISTOR	RN72K1J-391JE	1	435033914R1
R1021	CHIP TYPE CARBON RESISTOR	RN72K1J-101JE	1	435031014R1
R1022	CHIP TYPE CARBON RESISTOR	RN72K1J-151JE	1	435031514R1
R1023	CHIP TYPE CARBON RESISTOR	RN72K1J-221JE	1	435032214R1
R1024	CHIP TYPE CARBON RESISTOR	RN72K1J-470JE	1	435034704R1
R1025	CHIP TYPE CARBON RESISTOR	RN72K1J-470JE	1	435034704R1

R1026	CHIP TYPE CARBON RESISTOR	RN72K1J-331JE	1	435033314R1
R1027	CHIP TYPE CARBON RESISTOR	RN72K1J-221JE	1	435032214R1
R1028	CHIP TYPE CARBON RESISTOR	RN72K1J-221JE	1	435032214R1
R1029	CHIP TYPE CARBON RESISTOR	RN72K1J-102JE	1	435031024R1
R1030	CHIP TYPE CARBON RESISTOR	RN72K1J-000JE	1	435030004R1
R1031	CHIP TYPE CARBON RESISTOR	RN72K1J-331JE	1	435033314R1
R1032	CHIP TYPE CARBON RESISTOR	RN72K1J-331JE	1	435033314R1
R1033	CHIP TYPE CARBON RESISTOR	RN72K1J-000JE	1	435030004R1
R1034	CHIP TYPE CARBON RESISTOR	RN72K1J-221JE	1	435032214R1
R1035	CHIP TYPE CARBON RESISTOR	RN72K1J-331JE	1	435033314R1
R1036	CHIP TYPE CARBON RESISTOR	RN72K1J-331JE	1	435033314R1
R1037	CHIP TYPE CARBON RESISTOR	RN72K1J-331JE	1	435033314R1
R1038	CHIP TYPE CARBON RESISTOR	RN72K1J-103JE	1	435031034R1
R1039	CHIP TYPE CARBON RESISTOR	RN72K1J-330JE	1	435033304R1
R1040	CHIP TYPE CARBON RESISTOR	RN72K1J-331JE	1	435033314R1
R1041	CHIP TYPE CARBON RESISTOR	RN72K1J-221JE	1	435032214R1
R1042	CHIP TYPE CARBON RESISTOR	RN72K1J-331JE	1	435033314R1
R1043	CHIP TYPE CARBON RESISTOR	RN72K1J-221JE	1	435032214R1
R1044	CHIP TYPE CARBON RESISTOR	RN72K1J-221JE	1	435032214R1
R1046	CHIP TYPE CARBON RESISTOR	RN72K1J-470JE	1	435034704R1
R1047	CHIP TYPE CARBON RESISTOR	RN72K1J-681JE	1	435036814R1
R1049	CHIP TYPE CARBON RESISTOR	RN72K1J-103JE	1	435031034R1
R1051	CHIP TYPE CARBON RESISTOR	RN72K1J-000JE	1	435030004R1
R1052	CHIP TYPE CARBON RESISTOR	RN72K1J-000JE	1	435030004R1
R1054	CHIP TYPE CARBON RESISTOR	RN72K1J-221JE	1	435032214R1
R1055	CHIP TYPE CARBON RESISTOR	RN72K1J-000JE	1	435030004R1
R1057	CHIP TYPE CARBON RESISTOR	RN72K1J-221JE	1	435032214R1
R1058	CHIP RESISTOR NETWORK	YCN104-103-JK	1	43464C10304R1
R1058 or	CHIP RESISTOR NETWORK	MNR04MRAPJ103	(1)	43464710304R2
R1059	CHIP TYPE CARBON RESISTOR	RN72K1J-103JE	1	435031034R1
R1060	CHIP TYPE CARBON RESISTOR	RN72K1J-470JE	1	435034704R1
R1061	CHIP TYPE CARBON RESISTOR	RN72K1J-103JE	1	435031034R1
R1062	CHIP TYPE CARBON RESISTOR	RN72K1J-221JE	1	435032214R1
R1063	CHIP TYPE CARBON RESISTOR	RN72K1J-103JE	1	435031034R1
R1064	CHIP TYPE CARBON RESISTOR	RN72K1J-221JE	1	435032214R1
R1065	CHIP TYPE CARBON RESISTOR	RN72K1J-103JE	1	435031034R1
R1066	CHIP TYPE CARBON RESISTOR	RN72K1J-470JE	1	435034704R1
R1067	CHIP TYPE CARBON RESISTOR	RN72K1J-221JE	1	435032214R1
R1068	CHIP TYPE CARBON RESISTOR	RN72K1J-470JE	1	435034704R1
R1069	CHIP TYPE CARBON RESISTOR	RN72K1J-151JE	1	435031514R1
R1071	CHIP TYPE CARBON RESISTOR	RN72K1J-470JE	1	435034704R1
R1072	CHIP TYPE CARBON RESISTOR	RN72K1J-331JE	1	435033314R1
R1073	CHIP TYPE CARBON RESISTOR	RN72K1J-331JE	1	435033314R1
R1074	CHIP TYPE CARBON RESISTOR	RN72K1J-331JE	1	435033314R1
R1075	CHIP TYPE CARBON RESISTOR	RN72K1J-221JE	1	435032214R1
R1076	CHIP TYPE CARBON RESISTOR	RN72K1J-101JE	1	435031014R1
R1077	CHIP TYPE CARBON RESISTOR	RN72K1J-101JE	1	435031014R1
R1080	CHIP TYPE CARBON RESISTOR	RN72K1J-470JE	1	435034704R1
R1081	CHIP TYPE CARBON RESISTOR	RN72K1J-181JE	1	435031814R1
R1083	CHIP TYPE CARBON RESISTOR	RN72K1J-103JE	1	435031034R1
R1084	CHIP TYPE CARBON RESISTOR	RN72K1J-331JE	1	435033314R1
R1085	CHIP TYPE CARBON RESISTOR	RN72K1J-181JE	1	435031814R1
R1086	CHIP TYPE CARBON RESISTOR	RN72K1J-103JE	1	435031034R1
R1087	CHIP TYPE CARBON RESISTOR	RN72K1J-471JE	1	435034714R1
R1088	CHIP TYPE CARBON RESISTOR	RN72K1J-471JE	1	435034714R1
R1089	CHIP TYPE CARBON RESISTOR	RN72K1J-103JE	1	435031034R1
R1090	CHIP TYPE CARBON RESISTOR	RN72K1J-103JE	1	435031034R1
R1091	CHIP TYPE CARBON RESISTOR	RN72K1J-103JE	1	435031034R1
R1092	CHIP TYPE CARBON RESISTOR	RN72K1J-103JE	1	435031034R1
R1093	CHIP TYPE CARBON RESISTOR	RN72K1J-103JE	1	435031034R1
R1098	CHIP TYPE CARBON RESISTOR	RN72K1J-331JE	1	435033314R1
R1102	CHIP TYPE CARBON RESISTOR	RN72K1J-221JE	1	435032214R1
R1103	CHIP TYPE CARBON RESISTOR	RN72K1J-331JE	1	435033314R1
R1104	CHIP TYPE CARBON RESISTOR	RN72K1J-470JE	1	435034704R1
R1105	CHIP TYPE CARBON RESISTOR	RN72K1J-681JE	1	435036814R1
R1107	CHIP TYPE CARBON RESISTOR	RN72K1J-103JE	1	435031034R1
R1108	CHIP TYPE CARBON RESISTOR	RN72K1J-221JE	1	435032214R1

R1109	CHIP TYPE CARBON RESISTOR	RN72K1J-470JE	1	435034704R1
R1110	CHIP TYPE CARBON RESISTOR	RN72K1J-103JE	1	435031034R1
R1111	CHIP TYPE CARBON RESISTOR	RN72K1J-221JE	1	435032214R1
R1112	CHIP TYPE CARBON RESISTOR	RN72K1J-221JE	1	435032214R1
R1113	CHIP TYPE CARBON RESISTOR	RN72K1J-103JE	1	435031034R1
R1114	CHIP TYPE CARBON RESISTOR	RN72K1J-221JE	1	435032214R1
R1115	CHIP TYPE CARBON RESISTOR	RN72K1J-221JE	1	435032214R1
R3007	CHIP TYPE CARBON RESISTOR	RN72K1J-470JE	1	435034704R1
R3009	CHIP TYPE CARBON RESISTOR	RN72K1J-330JE	1	435033304R1
R3010	CHIP RESISTOR NETWORK	YCN104-330-JK	1	43464C33004R1
R3010 or	CHIP RESISTOR NETWORK	MNR04MRAPJ330	(1)	43464733004R2
R3011	CHIP RESISTOR NETWORK	YCN104-330-JK	1	43464C33004R1
R3011 or	CHIP RESISTOR NETWORK	MNR04MRAPJ330	(1)	43464733004R2
R3012	CHIP RESISTOR NETWORK	YCN104-470-JK	1	43464C47004R1
R3012 or	CHIP RESISTOR NETWORK	MNR04MRAPJ470	(1)	43464747004R2
R3013	CHIP RESISTOR NETWORK	YCN104-330-JK	1	43464C33004R1
R3013 or	CHIP RESISTOR NETWORK	MNR04MRAPJ330	(1)	43464733004R2
R3014	CHIP RESISTOR NETWORK	YCN104-330-JK	1	43464C33004R1
R3014 or	CHIP RESISTOR NETWORK	MNR04MRAPJ330	(1)	43464733004R2
R3015	CHIP RESISTOR NETWORK	YCN104-330-JK	1	43464C33004R1
R3015 or	CHIP RESISTOR NETWORK	MNR04MRAPJ330	(1)	43464733004R2
R3016	CHIP TYPE CARBON RESISTOR	RN72K1J-470JE	1	435034704R1
R3017	CHIP RESISTOR NETWORK	YCN104-330-JK	1	43464C33004R1
R3017 or	CHIP RESISTOR NETWORK	MNR04MRAPJ330	(1)	43464733004R2
R3018	CHIP TYPE CARBON RESISTOR	RN72K1J-470JE	1	435034704R1
R3019	CHIP RESISTOR NETWORK	YCN104-330-JK	1	43464C33004R1
R3019 or	CHIP RESISTOR NETWORK	MNR04MRAPJ330	(1)	43464733004R2
R3020	CHIP RESISTOR NETWORK	YCN104-330-JK	1	43464C33004R1
R3020 or	CHIP RESISTOR NETWORK	MNR04MRAPJ330	(1)	43464733004R2
R3021	CHIP TYPE CARBON RESISTOR	RN72K1J-470JE	1	435034704R1
R3022	CHIP TYPE CARBON RESISTOR	RN72K1J-470JE	1	435034704R1
R3023	CHIP RESISTOR NETWORK	YCN104-470-JK	1	43464C47004R1
R3023 or	CHIP RESISTOR NETWORK	MNR04MRAPJ470	(1)	43464747004R2
R3024	CHIP TYPE CARBON RESISTOR	RN72K1J-470JE	1	435034704R1
R3025	CHIP TYPE CARBON RESISTOR	RN72K1J-102JE	1	435031024R1
R3028	CHIP TYPE CARBON RESISTOR	RN72K1J-470JE	1	435034704R1
R3029	CHIP TYPE CARBON RESISTOR	RN72K1J-102JE	1	435031024R1
R3032	CHIP TYPE CARBON RESISTOR	RN72K1J-103JE	1	435031034R1
R3037	CHIP TYPE CARBON RESISTOR	RN72K1J-470JE	1	435034704R1
R3038	CHIP TYPE CARBON RESISTOR	RN72K1J-470JE	1	435034704R1
R3040	CHIP TYPE CARBON RESISTOR	RN72K1J-103JE	1	435031034R1
R3041	CHIP RESISTOR NETWORK	YCN104-330-JK	1	43464C33004R1
R3041 or	CHIP RESISTOR NETWORK	MNR04MRAPJ330	(1)	43464733004R2
R3042	CHIP RESISTOR NETWORK	YCN104-330-JK	1	43464C33004R1
R3042 or	CHIP RESISTOR NETWORK	MNR04MRAPJ330	(1)	43464733004R2
R3043	CHIP TYPE CARBON RESISTOR	RN72K1J-000JE	1	435030004R1
R3044	CHIP RESISTOR NETWORK	YCN104-330-JK	1	43464C33004R1
R3044 or	CHIP RESISTOR NETWORK	MNR04MRAPJ330	(1)	43464733004R2
R3045	CHIP RESISTOR NETWORK	YCN104-330-JK	1	43464C33004R1
R3045 or	CHIP RESISTOR NETWORK	MNR04MRAPJ330	(1)	43464733004R2
R3047	CHIP TYPE CARBON RESISTOR	RN72K1J-560JE	1	435035604R1
R3048	CHIP TYPE CARBON RESISTOR	RN72K1J-101JE	1	435031014R1
R3049	CHIP TYPE CARBON RESISTOR	RN72K1J-560JE	1	435035604R1
R3050	CHIP TYPE CARBON RESISTOR	RN72K1J-560JE	1	435035604R1
R3051	CHIP TYPE CARBON RESISTOR	RN72K1J-560JE	1	435035604R1
R3054	CHIP TYPE CARBON RESISTOR	RN72K1J-103JE	1	435031034R1
R3056	CHIP TYPE CARBON RESISTOR	RN72K1J-472JE	1	435034724R1
R3060	CHIP TYPE CARBON RESISTOR	RN72K1J-680JE	1	435036804R1
R3061	CHIP TYPE CARBON RESISTOR	RN72K1J-470JE	1	435034704R1
R3062	CHIP TYPE CARBON RESISTOR	RN72K1J-680JE	1	435036804R1
R3063	CHIP TYPE CARBON RESISTOR	RN72K1J-680JE	1	435036804R1
R3064	CHIP TYPE CARBON RESISTOR	RN72K1J-680JE	1	435036804R1
R3065	CHIP TYPE CARBON RESISTOR	RN72K1J-680JE	1	435036804R1
R3066	CHIP TYPE CARBON RESISTOR	RN72K1J-102JE	1	435031024R1
R3067	CHIP TYPE CARBON RESISTOR	RN72K1J-103JE	1	435031034R1
R3068	CHIP TYPE CARBON RESISTOR	RN72K1J-472JE	1	435034724R1
R3108	CHIP TYPE CARBON RESISTOR	RN72K1J-103JE	1	435031034R1

R3110	CHIP TYPE CARBON RESISTOR	RN72K1J-103JE	1	435031034R1
R3111	CHIP TYPE CARBON RESISTOR	RN72K1J-103JE	1	435031034R1
R3113	CHIP TYPE CARBON RESISTOR	RN72K1J-103JE	1	435031034R1
R3115	CHIP TYPE CARBON RESISTOR	RN72K1J-332JE	1	435033324R1
R3117	CHIP TYPE CARBON RESISTOR	RN72K1J-332JE	1	435033324R1
R3119	CHIP TYPE CARBON RESISTOR	RN72K1J-332JE	1	435033324R1
R3122	CHIP TYPE CARBON RESISTOR	RN72K1J-102JE	1	435031024R1
R3123	CHIP TYPE CARBON RESISTOR	RN72K1J-000JE	1	435030004R1
R3124	CHIP TYPE CARBON RESISTOR	RN72K1J-331JE	1	435033314R1
R3125	CHIP TYPE CARBON RESISTOR	RN72K1J-470JE	1	435034704R1
R3126	CHIP TYPE CARBON RESISTOR	RN72K1J-470JE	1	435034704R1
R3127	CHIP TYPE CARBON RESISTOR	RN72K1J-470JE	1	435034704R1
R3128	CHIP TYPE CARBON RESISTOR	RN72K1J-472JE	1	435034724R1
R3129	CHIP TYPE CARBON RESISTOR	RN72K1J-470JE	1	435034704R1
R3130	CHIP TYPE CARBON RESISTOR	RN72K1J-470JE	1	435034704R1
R3131	CHIP TYPE CARBON RESISTOR	RN72K1J-470JE	1	435034704R1
R3132	CHIP TYPE CARBON RESISTOR	RN72K1J-103JE	1	435031034R1
R3133	CHIP TYPE CARBON RESISTOR	RN72K1J-470JE	1	435034704R1
R3134	CHIP TYPE CARBON RESISTOR	RN72K1J-472JE	1	435034724R1
R3135	CHIP TYPE CARBON RESISTOR	RN72K1J-472JE	1	435034724R1
R3136	CHIP TYPE CARBON RESISTOR	RN72K1J-000JE	1	435030004R1
R3137	CHIP TYPE CARBON RESISTOR	RN72K1J-000JE	1	435030004R1
R3138	CHIP TYPE CARBON RESISTOR	RN72K1J-102JE	1	435031024R1
R3139	CHIP TYPE CARBON RESISTOR	RN72K1J-101JE	1	435031014R1
R3143	CHIP TYPE CARBON RESISTOR	RN72K1J-392JE	1	435033924R1
R3144	CHIP TYPE CARBON RESISTOR	RN72K1J-101JE	1	435031014R1
R3145	CHIP TYPE CARBON RESISTOR	RN72K1J-392JE	1	435033924R1
R3146	CHIP TYPE CARBON RESISTOR	RN72K1J-390JE	1	435033904R1
R3147	CHIP TYPE CARBON RESISTOR	RN72K1J-000JE	1	435030004R1
R3148	CHIP TYPE CARBON RESISTOR	RN72K1J-390JE	1	435033904R1
R3154	CHIP TYPE CARBON RESISTOR	RN72K1J-390JE	1	435033904R1
R3155	CHIP TYPE CARBON RESISTOR	RN72K1J-390JE	1	435033904R1
R3156	CHIP TYPE CARBON RESISTOR	RN72K1J-390JE	1	435033904R1
R3157	CHIP TYPE CARBON RESISTOR	RN72K1J-000JE	1	435030004R1
R3162	CHIP TYPE CARBON RESISTOR	RN72K1J-390JE	1	435033904R1
R3163	CHIP TYPE CARBON RESISTOR	RN72K1J-220JE	1	435032204R1
R3164	CHIP TYPE CARBON RESISTOR	RN72K1J-472JE	1	435034724R1
R3168	CHIP TYPE CARBON RESISTOR	RN72K1J-220JE	1	435032204R1
R3169	CHIP TYPE CARBON RESISTOR	RN72K1J-220JE	1	435032204R1
R3170	CHIP TYPE CARBON RESISTOR	RN72K1J-391FE	1	435033912R1
R3171	CHIP TYPE CARBON RESISTOR	RN72K1J-222FE	1	435032222R1
R3172	CHIP TYPE CARBON RESISTOR	RN72K1J-392FE	1	435033922R1
R3173	CHIP TYPE CARBON RESISTOR	RN72K1J-390JE	1	435033904R1
R3174	CHIP TYPE CARBON RESISTOR	RN72K1J-390JE	1	435033904R1
R3175	CHIP TYPE CARBON RESISTOR	RN72K1J-472JE	1	435034724R1
R3181	CHIP TYPE CARBON RESISTOR	RN72K1J-470JE	1	435034704R1
R3182	CHIP TYPE CARBON RESISTOR	RN72K1J-472JE	1	435034724R1
R3183	CHIP TYPE CARBON RESISTOR	RN72K1J-470JE	1	435034704R1
R3184	CHIP TYPE CARBON RESISTOR	RN72K1J-470JE	1	435034704R1
R3187	CHIP TYPE CARBON RESISTOR	RN72K1J-472JE	1	435034724R1
R3188	CHIP TYPE CARBON RESISTOR	RN72K1J-103JE	1	435031034R1
R3190	CHIP TYPE CARBON RESISTOR	RN72K1J-103JE	1	435031034R1
R3192	CHIP TYPE CARBON RESISTOR	RN72K1J-472JE	1	435034724R1
R3193	CHIP TYPE CARBON RESISTOR	RN72K1J-472JE	1	435034724R1
R3194	CHIP TYPE CARBON RESISTOR	RN72K1J-472JE	1	435034724R1
R3199	CHIP TYPE CARBON RESISTOR	RN72K1J-102JE	1	435031024R1
R3200	CHIP TYPE CARBON RESISTOR	RN72K1J-680JE	1	435036804R1
R3201	CHIP RESISTOR NETWORK	YCN104-470-JK	1	43464C47004R1
R3201 or	CHIP RESISTOR NETWORK	MNR04MRAPJ470	(1)	43464747004R2
R3202	CHIP TYPE CARBON RESISTOR	RN72K1J-470JE	1	435034704R1
R3203	CHIP TYPE CARBON RESISTOR	RN72K1J-470JE	1	435034704R1
R3204	CHIP TYPE CARBON RESISTOR	RN72K1J-103JE	1	435031034R1
R3205	CHIP TYPE CARBON RESISTOR	RN72K1J-470JE	1	435034704R1
R3207	CHIP TYPE CARBON RESISTOR	RN72K1J-000JE	1	435030004R1
R3208	CHIP TYPE CARBON RESISTOR	RN72K1J-271JE	1	435032714R1
R3209	CHIP TYPE CARBON RESISTOR	RN72K1J-000JE	1	435030004R1
R3210	CHIP TYPE CARBON RESISTOR	RN72K1J-103JE	1	435031034R1

R3211	CHIP TYPE CARBON RESISTOR	RN72K1J-470JE	1	435034704R1
R3212	CHIP TYPE CARBON RESISTOR	RN72K1J-220JE	1	435032204R1
R3213	CHIP TYPE CARBON RESISTOR	RN72K1J-103JE	1	435031034R1
R3218	CHIP TYPE CARBON RESISTOR	RN72K1J-220JE	1	435032204R1
R3221	CHIP TYPE CARBON RESISTOR	RN72K1J-470JE	1	435034704R1
R3226	CHIP RESISTOR NETWORK	YCN104-470-JK	1	43464C47004R1
R3226 or	CHIP RESISTOR NETWORK	MNR04MRAPJ470	(1)	43464747004R2
R3234	CHIP TYPE CARBON RESISTOR	RN72K1J-470JE	1	435034704R1
R3244	CHIP TYPE CARBON RESISTOR	RN72K1J-470JE	1	435034704R1
R3247	CHIP TYPE CARBON RESISTOR	RN72K1J-121JE	1	435031214R1
R3251	CHIP TYPE CARBON RESISTOR	RN72K1J-470JE	1	435034704R1
R3257	CHIP TYPE CARBON RESISTOR	RN72K1J-470JE	1	435034704R1
R3260	CHIP TYPE CARBON RESISTOR	RN72K1J-390JE	1	435033904R1
R3262	CHIP TYPE CARBON RESISTOR	RN72K1J-221JE	1	435032214R1
R3265	CHIP TYPE CARBON RESISTOR	RN72K1J-390JE	1	435033904R1
R3268	CHIP TYPE CARBON RESISTOR	RN72K1J-390JE	1	435033904R1
R3271	CHIP TYPE CARBON RESISTOR	RN72K1J-390JE	1	435033904R1
R3272	CHIP TYPE CARBON RESISTOR	RN72K1J-470JE	1	435034704R1
R3274	CHIP TYPE CARBON RESISTOR	RN72K1J-390JE	1	435033904R1
R3275	CHIP TYPE CARBON RESISTOR	RN72K1J-332JE	1	435033324R1
R3277	CHIP TYPE CARBON RESISTOR	RN72K1J-220JE	1	435032204R1
R3281	CHIP TYPE CARBON RESISTOR	RN72K1J-103JE	1	435031034R1
R3284	CHIP TYPE CARBON RESISTOR	RN72K1J-103JE	1	435031034R1
R3285	CHIP TYPE CARBON RESISTOR	RN72K1J-332JE	1	435033324R1
R3286	CHIP TYPE CARBON RESISTOR	RN72K1J-332JE	1	435033324R1
R3289	CHIP TYPE CARBON RESISTOR	RN72K1J-332JE	1	435033324R1
R3290	CHIP TYPE CARBON RESISTOR	RN72K1J-470JE	1	435034704R1
R3291	CHIP RESISTOR NETWORK	YCN104-470-JK	1	43464C47004R1
R3291 or	CHIP RESISTOR NETWORK	MNR04MRAPJ470	(1)	43464747004R2
R3293	CHIP TYPE CARBON RESISTOR	RN72K1J-470JE	1	435034704R1
R3297	CHIP TYPE CARBON RESISTOR	RN72K1J-103JE	1	435031034R1
R3400	CHIP TYPE CARBON RESISTOR	RN72K1J-472JE	1	435034724R1
R3403	CHIP TYPE CARBON RESISTOR	RN72K1J-470JE	1	435034704R1
R3404	CHIP TYPE CARBON RESISTOR	RN72K1J-470JE	1	435034704R1
R3406	CHIP TYPE CARBON RESISTOR	RN72K1J-222JE	1	435032224R1
R3407	CHIP TYPE CARBON RESISTOR	RN72K1J-222JE	1	435032224R1
R3408	CHIP RESISTOR NETWORK	YCN104-221-JK	1	43464C22104R1
R3408 or	CHIP RESISTOR NETWORK	MNR04MRAPJ221	(1)	43464722104R2
R3409	CHIP RESISTOR NETWORK	YCN104-221-JK	1	43464C22104R1
R3409 or	CHIP RESISTOR NETWORK	MNR04MRAPJ221	(1)	43464722104R2
R3411	CHIP RESISTOR NETWORK	YCN104-000-ZK	1	43484C00004R1
R3411 or	CHIP RESISTOR NETWORK	MNR04MRAPJ000	(1)	43464700004R2
R3412	CHIP TYPE CARBON RESISTOR	RN72K1J-472JE	1	435034724R1
R3414	CHIP TYPE CARBON RESISTOR	RN72K1J-103JE	1	435031034R1
R3415	CHIP RESISTOR NETWORK	YCN104-000-ZK	1	43484C00004R1
R3415 or	CHIP RESISTOR NETWORK	MNR04MRAPJ000	(1)	43464700004R2
R3421	CHIP TYPE CARBON RESISTOR	RN72K1J-560JE	1	435035604R1
R3423	CHIP TYPE CARBON RESISTOR	RN72K1J-000JE	1	435030004R1
R3424	CHIP TYPE CARBON RESISTOR	RN72K1J-470JE	1	435034704R1
R3425	CHIP TYPE CARBON RESISTOR	RN72K1J-470JE	1	435034704R1
R3428	CHIP TYPE CARBON RESISTOR	RN72K1J-472JE	1	435034724R1
R3429	CHIP RESISTOR NETWORK	YCN104-470-JK	1	43464C47004R1
R3429 or	CHIP RESISTOR NETWORK	MNR04MRAPJ470	(1)	43464747004R2
R3430	CHIP RESISTOR NETWORK	YCN104-470-JK	1	43464C47004R1
R3430 or	CHIP RESISTOR NETWORK	MNR04MRAPJ470	(1)	43464747004R2
R3432	CHIP TYPE CARBON RESISTOR	RN72K1J-103JE	1	435031034R1
R3433	CHIP TYPE CARBON RESISTOR	RN72K1J-103JE	1	435031034R1
R3434	CHIP TYPE CARBON RESISTOR	RN72K1J-222JE	1	435032224R1
R3435	CHIP TYPE CARBON RESISTOR	RN72K1J-222JE	1	435032224R1
R3436	CHIP TYPE CARBON RESISTOR	RN72K1J-560JE	1	435035604R1
R3437	CHIP TYPE CARBON RESISTOR	RN72K1J-560JE	1	435035604R1
R3438	CHIP TYPE CARBON RESISTOR	RN72K1J-560JE	1	435035604R1
R3439	CHIP TYPE CARBON RESISTOR	RN72K1J-332JE	1	435033324R1
R3440	CHIP TYPE CARBON RESISTOR	RN72K1J-332JE	1	435033324R1
R3441	CHIP RESISTOR NETWORK	YCN104-470-JK	1	43464C47004R1
R3441 or	CHIP RESISTOR NETWORK	MNR04MRAPJ470	(1)	43464747004R2
R3442	CHIP TYPE CARBON RESISTOR	RN72K1J-105JE	1	435031054R1

R3443	CHIP TYPE CARBON RESISTOR	RN72K1J-000JE	1	435030004R1
R3444	CHIP TYPE CARBON RESISTOR	RN72K1J-223JE	1	435032234R1
R3445	CHIP RESISTOR NETWORK	YCN104-470-JK	1	43464C47004R1
R3445 or	CHIP RESISTOR NETWORK	MNR04MRAPJ470	(1)	43464747004R2
R3446	CHIP TYPE CARBON RESISTOR	RN72K1J-102JE	1	435031024R1
R3447	CHIP TYPE CARBON RESISTOR	RN72K1J-560JE	1	435035604R1
R3448	CHIP TYPE CARBON RESISTOR	RN72K1J-330JE	1	435033304R1
R3450	CHIP TYPE CARBON RESISTOR	RN72K1J-560JE	1	435035604R1
R3452	CHIP TYPE CARBON RESISTOR	RN72K1J-470JE	1	435034704R1
R3453	CHIP TYPE CARBON RESISTOR	RN72K1J-121JE	1	435031214R1
R3454	CHIP TYPE CARBON RESISTOR	RN72K1J-470JE	1	435034704R1
R3455	CHIP TYPE CARBON RESISTOR	RN72K1J-121JE	1	435031214R1
R3456	CHIP TYPE CARBON RESISTOR	RN72K1J-470JE	1	435034704R1
R3457	CHIP RESISTOR NETWORK	YCN104-470-JK	1	43464C47004R1
R3457 or	CHIP RESISTOR NETWORK	MNR04MRAPJ470	(1)	43464747004R2
R3462	CHIP TYPE CARBON RESISTOR	RN72K1J-102JE	1	435031024R1
R3464	CHIP TYPE CARBON RESISTOR	RN72K1J-102JE	1	435031024R1
R3465	CHIP TYPE CARBON RESISTOR	RN72K1J-102JE	1	435031024R1
R3466	CHIP TYPE CARBON RESISTOR	RN72K1J-102JE	1	435031024R1
R3469	CHIP TYPE CARBON RESISTOR	RN72K1J-222JE	1	435032224R1
R3470	CHIP TYPE CARBON RESISTOR	RN72K1J-222JE	1	435032224R1
R3473	CHIP TYPE CARBON RESISTOR	RN72K1J-103JE	1	435031034R1
R3474	CHIP TYPE CARBON RESISTOR	RN72K1J-103JE	1	435031034R1
R3481	CHIP TYPE CARBON RESISTOR	RN72K1J-332JE	1	435033324R1
R3484	CHIP TYPE CARBON RESISTOR	RN72K1J-470JE	1	435034704R1
R3485	CHIP TYPE CARBON RESISTOR	RN72K1J-470JE	1	435034704R1
R3488	CHIP TYPE CARBON RESISTOR	RN72K1J-332JE	1	435033324R1
R3491	CHIP TYPE CARBON RESISTOR	RN72K1J-332JE	1	435033324R1
R3494	CHIP RESISTOR NETWORK	YCN104-470-JK	1	43464C47004R1
R3494 or	CHIP RESISTOR NETWORK	MNR04MRAPJ470	(1)	43464747004R2
R3495	CHIP RESISTOR NETWORK	YCN104-470-JK	1	43464C47004R1
R3495 or	CHIP RESISTOR NETWORK	MNR04MRAPJ470	(1)	43464747004R2
R3496	CHIP RESISTOR NETWORK	YCN104-470-JK	1	43464C47004R1
R3496 or	CHIP RESISTOR NETWORK	MNR04MRAPJ470	(1)	43464747004R2
R3497	CHIP RESISTOR NETWORK	YCN104-470-JK	1	43464C47004R1
R3497 or	CHIP RESISTOR NETWORK	MNR04MRAPJ470	(1)	43464747004R2
R3500	CHIP TYPE CARBON RESISTOR	RN72K1J-470JE	1	435034704R1
R3501	CHIP TYPE CARBON RESISTOR	RN72K1J-470JE	1	435034704R1
R3502	CHIP TYPE CARBON RESISTOR	RN72K1J-470JE	1	435034704R1
R3503	CHIP TYPE CARBON RESISTOR	RN72K1J-470JE	1	435034704R1
R3504	CHIP TYPE CARBON RESISTOR	RN72K1J-470JE	1	435034704R1
R3505	CHIP TYPE CARBON RESISTOR	RN72K1J-470JE	1	435034704R1
R3506	CHIP TYPE CARBON RESISTOR	RN72K1J-000JE	1	435030004R1
R3507	CHIP TYPE CARBON RESISTOR	RN72K1J-470JE	1	435034704R1
R3508	CHIP TYPE CARBON RESISTOR	RN72K1J-220JE	1	435032204R1
R3509	CHIP TYPE CARBON RESISTOR	RN72K1J-220JE	1	435032204R1
R7000	CHIP TYPE CARBON RESISTOR	RN72K1J-472JE	1	435034724R1
R7002	CHIP TYPE CARBON RESISTOR	RN72K1J-103JE	1	435031034R1
R7003	CHIP TYPE CARBON RESISTOR	RN72K1J-103JE	1	435031034R1
R7004	CHIP TYPE CARBON RESISTOR	RN72K1J-472JE	1	435034724R1
R7005	CHIP TYPE CARBON RESISTOR	RN72K1J-223JE	1	435032234R1
R7006	CHIP TYPE CARBON RESISTOR	RN72K1J-223JE	1	435032234R1
R7007	CHIP TYPE CARBON RESISTOR	RN72K1J-105JE	1	435031054R1
R7008	CHIP TYPE CARBON RESISTOR	RN72K1J-473JE	1	435034734R1
R7009	CHIP TYPE CARBON RESISTOR	RN72K1J-105JE	1	435031054R1
R7010	CHIP TYPE CARBON RESISTOR	RN72K1J-470JE	1	435034704R1
R7011	CHIP TYPE CARBON RESISTOR	RN72K1J-103JE	1	435031034R1
R7012	CHIP TYPE CARBON RESISTOR	RN72K1J-103JE	1	435031034R1
R7013	CHIP TYPE CARBON RESISTOR	RN72K1J-103JE	1	435031034R1
R7014	CHIP TYPE CARBON RESISTOR	RN72K1J-473JE	1	435034734R1
R7015	CHIP TYPE CARBON RESISTOR	RN72K1J-473JE	1	435034734R1
R7016	CHIP TYPE CARBON RESISTOR	RN72K1J-473JE	1	435034734R1
R7017	CHIP TYPE CARBON RESISTOR	RN72K1J-472JE	1	435034724R1
R7018	CHIP TYPE CARBON RESISTOR	RN72K1J-472JE	1	435034724R1
R7019	CHIP TYPE CARBON RESISTOR	RN72K1J-472JE	1	435034724R1
R7020	CHIP TYPE CARBON RESISTOR	RN72K1J-472JE	1	435034724R1
R7021	CHIP TYPE CARBON RESISTOR	RN72K1J-221JE	1	435032214R1

R7023	CHIP TYPE CARBON RESISTOR	RN72K1J-221JE	1	435032214R1
R7024	CHIP TYPE CARBON RESISTOR	RN72K1J-221JE	1	435032214R1
R7025	CHIP TYPE CARBON RESISTOR	RN72K1J-224JE	1	435032244R1
R7026	CHIP TYPE CARBON RESISTOR	RN72K1J-224JE	1	435032244R1
R7027	CHIP TYPE CARBON RESISTOR	RN72K1J-103JE	1	435031034R1
R7028	CHIP TYPE CARBON RESISTOR	RN72K1J-000JE	1	435030004R1
R7029	CHIP TYPE CARBON RESISTOR	RN72K1J-102JE	1	435031024R1
R7030	CHIP TYPE CARBON RESISTOR	RN72K1J-221JE	1	435032214R1
R7031	CHIP RESISTOR NETWORK	YCN104-221-JK	1	43464C22104R1
R7031 or	CHIP RESISTOR NETWORK	MNR04MRAPJ221	(1)	43464722104R2
R7032	CHIP TYPE CARBON RESISTOR	RN72K1J-470JE	1	435034704R1
R7033	CHIP RESISTOR NETWORK	YCN104-470-JK	1	43464C47004R1
R7033 or	CHIP RESISTOR NETWORK	MNR04MRAPJ470	(1)	43464747004R2
R7034	CHIP TYPE CARBON RESISTOR	RN72K1J-221JE	1	435032214R1
R7035	CHIP TYPE CARBON RESISTOR	RN72K1J-470JE	1	435034704R1
R7036	CHIP TYPE CARBON RESISTOR	RN72K1J-102JE	1	435031024R1
R7037	CHIP TYPE CARBON RESISTOR	RN72K1J-102JE	1	435031024R1
R7038	CHIP TYPE CARBON RESISTOR	RN72K1J-102JE	1	435031024R1
R7039	CHIP TYPE CARBON RESISTOR	RN72K1J-222JE	1	435032224R1
R7040	CHIP TYPE CARBON RESISTOR	RN72K1J-222JE	1	435032224R1
R7041	CHIP TYPE CARBON RESISTOR	RN72K1J-222JE	1	435032224R1
R7042	CHIP RESISTOR NETWORK	YCN104-221-JK	1	43464C22104R1
R7042 or	CHIP RESISTOR NETWORK	MNR04MRAPJ221	(1)	43464722104R2
R7044	CHIP TYPE CARBON RESISTOR	RN72K1J-470JE	1	435034704R1
R7046	CHIP TYPE CARBON RESISTOR	RN72K1J-221JE	1	435032214R1
R7048	CHIP TYPE CARBON RESISTOR	RN72K1J-221JE	1	435032214R1
R7049	CHIP TYPE CARBON RESISTOR	RN72K1J-470JE	1	435034704R1
R7050	CHIP TYPE CARBON RESISTOR	RN72K1J-103JE	1	435031034R1
R7051	CHIP TYPE CARBON RESISTOR	RN72K1J-332JE	1	435033324R1
R7052	CHIP TYPE CARBON RESISTOR	RN72K1J-221JE	1	435032214R1
R7053	CHIP TYPE CARBON RESISTOR	RN72K1J-221JE	1	435032214R1
R7054	CHIP TYPE CARBON RESISTOR	RN72K1J-102JE	1	435031024R1
R7055	CHIP TYPE CARBON RESISTOR	RN72K1J-102JE	1	435031024R1
R7056	CHIP TYPE CARBON RESISTOR	RN72K1J-221JE	1	435032214R1
R7057	CHIP TYPE CARBON RESISTOR	RN72K1J-105JE	1	435031054R1
R7058	CHIP TYPE CARBON RESISTOR	RN72K1J-103JE	1	435031034R1
R7059	CHIP TYPE CARBON RESISTOR	RN72K1J-224JE	1	435032244R1
R7060	CHIP TYPE CARBON RESISTOR	RN72K1J-470JE	1	435034704R1
R7061	CHIP TYPE CARBON RESISTOR	RN72K1J-221JE	1	435032214R1
R7062	CHIP TYPE CARBON RESISTOR	RN72K1J-221JE	1	435032214R1
R7063	CHIP TYPE CARBON RESISTOR	RN72K1J-103JE	1	435031034R1
R7064	CHIP TYPE CARBON RESISTOR	RN72K1J-470JE	1	435034704R1
R7065	CHIP TYPE CARBON RESISTOR	RN72K1J-473JE	1	435034734R1
R7066	CHIP TYPE CARBON RESISTOR	RN72K1J-221JE	1	435032214R1
R7069	CHIP RESISTOR NETWORK	YCN104-470-JK	1	43464C47004R1
R7069 or	CHIP RESISTOR NETWORK	MNR04MRAPJ470	(1)	43464747004R2
R7070	CHIP TYPE CARBON RESISTOR	RN72K1J-470JE	1	435034704R1
R7072	CHIP TYPE CARBON RESISTOR	RN72K1J-470JE	1	435034704R1
R7073	CHIP TYPE CARBON RESISTOR	RN72K1J-102JE	1	435031024R1
R7075	CHIP RESISTOR NETWORK	YCN104-470-JK	1	43464C47004R1
R7075 or	CHIP RESISTOR NETWORK	MNR04MRAPJ470	(1)	43464747004R2
R7076	CHIP TYPE CARBON RESISTOR	RN72K1J-221JE	1	435032214R1
R7077	CHIP TYPE CARBON RESISTOR	RN72K1J-331JE	1	435033314R1
R7079	CHIP RESISTOR NETWORK	YCN104-221-JK	1	43464C22104R1
R7079 or	CHIP RESISTOR NETWORK	MNR04MRAPJ221	(1)	43464722104R2
R7080	CHIP TYPE CARBON RESISTOR	RN72K1J-331JE	1	435033314R1
R7081	CHIP TYPE CARBON RESISTOR	RN72K1J-221JE	1	435032214R1
R7084	CHIP TYPE CARBON RESISTOR	RN72K1J-470JE	1	435034704R1
R7086	CHIP TYPE CARBON RESISTOR	RN72K1J-103JE	1	435031034R1
R7087	CHIP TYPE CARBON RESISTOR	RN72K1J-273JE	1	435032734R1
R7089	CHIP TYPE CARBON RESISTOR	RN72K1J-103JE	1	435031034R1
R7090	CHIP TYPE CARBON RESISTOR	RN72K1J-103JE	1	435031034R1
R7091	CHIP TYPE CARBON RESISTOR	RN72K1J-221JE	1	435032214R1
R7092	CHIP TYPE CARBON RESISTOR	RN72K1J-470JE	1	435034704R1
R7093	CHIP TYPE CARBON RESISTOR	RN72K1J-472JE	1	435034724R1
R7094	CHIP TYPE CARBON RESISTOR	RN72K1J-472JE	1	435034724R1
R7095	CHIP RESISTOR NETWORK	YCN104-221-JK	1	43464C22104R1

R7095 or	CHIP RESISTOR NETWORK	MNR04MRAPJ221	(1)	43464722104R2
R7096	CHIP TYPE CARBON RESISTOR	RN72K1J-221JE	1	435032214R1
R7098	CHIP RESISTOR NETWORK	YCN104-221-JK	1	43464C22104R1
R7098 or	CHIP RESISTOR NETWORK	MNR04MRAPJ221	(1)	43464722104R2
R7099	CHIP RESISTOR NETWORK	YCN104-470-JK	1	43464C47004R1
R7099 or	CHIP RESISTOR NETWORK	MNR04MRAPJ470	(1)	43464747004R2
R7100	CHIP TYPE CARBON RESISTOR	RN72K1J-104JE	1	435031044R1
R7101	CHIP TYPE CARBON RESISTOR	RN72K1J-221JE	1	435032214R1
R7103	CHIP TYPE CARBON RESISTOR	RN72K1J-221JE	1	435032214R1
R7104	CHIP TYPE CARBON RESISTOR	RN72K1J-470JE	1	435034704R1
R7105	CHIP RESISTOR NETWORK	YCN104-470-JK	1	43464C47004R1
R7105 or	CHIP RESISTOR NETWORK	MNR04MRAPJ470	(1)	43464747004R2
R7106	CHIP TYPE CARBON RESISTOR	RN72K1J-101JE	1	435031014R1
R7107	CHIP TYPE CARBON RESISTOR	RN72K1J-101JE	1	435031014R1
R7108	CHIP RESISTOR NETWORK	YCN104-223-JK	1	43464C22304R1
R7108 or	CHIP RESISTOR NETWORK	MNR04MRAPJ223	(1)	43464722304R2
R7110	CHIP TYPE CARBON RESISTOR	RN72K1J-103JE	1	435031034R1
R7111	CHIP TYPE CARBON RESISTOR	RN72K1J-104JE	1	435031044R1
R7114	CHIP TYPE CARBON RESISTOR	RN72K1J-221JE	1	435032214R1
R7116	CHIP TYPE CARBON RESISTOR	RN72K1J-105JE	1	435031054R1
R7118	CHIP TYPE CARBON RESISTOR	RN72K1J-105JE	1	435031054R1
R7120	CHIP TYPE CARBON RESISTOR	RN72K1J-103JE	1	435031034R1
R7121	CHIP TYPE CARBON RESISTOR	RN72K1J-105JE	1	435031054R1
R7122	CHIP TYPE CARBON RESISTOR	RN72K1J-105JE	1	435031054R1
R7123	CHIP RESISTOR NETWORK	YCN104-221-JK	1	43464C22104R1
R7123 or	CHIP RESISTOR NETWORK	MNR04MRAPJ221	(1)	43464722104R2
R7125	CHIP TYPE CARBON RESISTOR	RN72K1J-473JE	1	435034734R1
R7126	CHIP TYPE CARBON RESISTOR	RN72K1J-221JE	1	435032214R1
R7131	CHIP TYPE CARBON RESISTOR	RN72K1J-221JE	1	435032214R1
R7132	CHIP TYPE CARBON RESISTOR	RN72K1J-470JE	1	435034704R1
R7133	CHIP TYPE CARBON RESISTOR	RN72K1J-221JE	1	435032214R1
R7136	CHIP TYPE CARBON RESISTOR	RN72K1J-470JE	1	435034704R1
R7137	CHIP TYPE CARBON RESISTOR	RN72K1J-470JE	1	435034704R1
R7138	CHIP TYPE CARBON RESISTOR	RN72K1J-470JE	1	435034704R1
R7140	CHIP TYPE CARBON RESISTOR	RN72K1J-103JE	1	435031034R1
R7141	CHIP TYPE CARBON RESISTOR	RN72K1J-103JE	1	435031034R1
R7142	CHIP TYPE CARBON RESISTOR	RN72K1J-221JE	1	435032214R1
R7150	CHIP TYPE CARBON RESISTOR	RN72K1J-221JE	1	435032214R1
R7151	CHIP TYPE CARBON RESISTOR	RN72K1J-221JE	1	435032214R1
R7161	CHIP TYPE CARBON RESISTOR	RN72K1J-103JE	1	435031034R1
R7170	CHIP TYPE CARBON RESISTOR	RN72K1J-102JE	1	435031024R1
R7171	CHIP TYPE CARBON RESISTOR	RN72K1J-473JE	1	435034734R1
R7172	CHIP TYPE CARBON RESISTOR	RN72K1J-222JE	1	435032224R1
R7173	CHIP TYPE CARBON RESISTOR	RN72K1J-221JE	1	435032214R1
R7180	CHIP TYPE CARBON RESISTOR	RN72K1J-272JE	1	435032724R1
R7181	CHIP TYPE CARBON RESISTOR	RN72K1J-272JE	1	435032724R1
R7182	CHIP TYPE CARBON RESISTOR	RN72K1J-272JE	1	435032724R1
R7183	CHIP TYPE CARBON RESISTOR	RN72K1J-272JE	1	435032724R1
R7184	CHIP TYPE CARBON RESISTOR	RN72K1J-103JE	1	435031034R1
R7186	CHIP TYPE CARBON RESISTOR	RN72K1J-104JE	1	435031044R1
R7187	CHIP TYPE CARBON RESISTOR	RN72K1J-104JE	1	435031044R1
R7188	CHIP TYPE CARBON RESISTOR	RN72K1J-104JE	1	435031044R1
R8000	CHIP TYPE CARBON RESISTOR	RN72K1J-000JE	1	435030004R1
R8001	CHIP TYPE CARBON RESISTOR	RN72K1J-182JE	1	435031824R1
R8002	CHIP TYPE CARBON RESISTOR	RN72K1J-182JE	1	435031824R1
R8008	CHIP TYPE CARBON RESISTOR	RN72K1J-103JE	1	435031034R1
R8009	CHIP TYPE CARBON RESISTOR	RN72K1J-103FE	1	435031032R1
R8010	CHIP TYPE CARBON RESISTOR	RN72K1J-223FE	1	435032232R1
R8015	CHIP TYPE CARBON RESISTOR	RN72K1J-100JE	1	435031004R1
R8016	CHIP TYPE CARBON RESISTOR	RN72K1J-560JE	1	435035604R1
R8018	CHIP TYPE CARBON RESISTOR	RN72K1J-560JE	1	435035604R1
R8019	CHIP TYPE CARBON RESISTOR	RN72K1J-103JE	1	435031034R1
R8021	CHIP TYPE CARBON RESISTOR	RN72K1J-182JE	1	435031824R1
R8022	CHIP TYPE CARBON RESISTOR	RN72K1J-182JE	1	435031824R1
R8023	CHIP TYPE CARBON RESISTOR	RN72K1J-100JE	1	435031004R1
R8024	CHIP TYPE CARBON RESISTOR	RN72K1J-473JE	1	435034734R1
R8025	CHIP TYPE CARBON RESISTOR	RN72K1J-560JE	1	435035604R1

R8026	CHIP TYPE CARBON RESISTOR	RN72K1J-560JE	1	435035604R1
R8027	CHIP TYPE CARBON RESISTOR	RN72K1J-103JE	1	435031034R1
R8028	CHIP TYPE CARBON RESISTOR	RN72K1J-100JE	1	435031004R1
R8029	CHIP TYPE CARBON RESISTOR	RN72K1J-100JE	1	435031004R1
R8030	CHIP TYPE CARBON RESISTOR	RN72K1J-473JE	1	435034734R1
R8031	CHIP TYPE CARBON RESISTOR	RN72K1J-273JE	1	435032734R1
R8035	CHIP TYPE CARBON RESISTOR	RN72K1J-000JE	1	435030004R1
R8037	CHIP TYPE CARBON RESISTOR	RN72K1J-103JE	1	435031034R1
R8038	CHIP TYPE CARBON RESISTOR	RN72K1J-103JE	1	435031034R1
R8039	CHIP TYPE CARBON RESISTOR	RN72K1J-100JE	1	435031004R1
R8040	CHIP TYPE CARBON RESISTOR	RN72K1J-103JE	1	435031034R1
R8041	CHIP TYPE CARBON RESISTOR	RN72K1J-100JE	1	435031004R1
R8042	CHIP TYPE CARBON RESISTOR	RN72K1J-103JE	1	435031034R1
R8043	CHIP TYPE CARBON RESISTOR	RN72K1J-330JE	1	435033304R1
R8044	CHIP TYPE CARBON RESISTOR	RN72K1J-330JE	1	435033304R1
R8045	CHIP TYPE CARBON RESISTOR	RN72K1J-330JE	1	435033304R1
R8046	CHIP TYPE CARBON RESISTOR	RN72K1J-330JE	1	435033304R1
R8060	CHIP TYPE CARBON RESISTOR	RN72K1J-330JE	1	435033304R1
R8061	CHIP TYPE CARBON RESISTOR	RN72K1J-330JE	1	435033304R1
R8062	CHIP TYPE CARBON RESISTOR	RN72K1J-330JE	1	435033304R1
R8063	CHIP TYPE CARBON RESISTOR	RN72K1J-330JE	1	435033304R1
R8064	CHIP TYPE CARBON RESISTOR	RN72K1J-330JE	1	435033304R1
R8065	CHIP TYPE CARBON RESISTOR	RN72K1J-330JE	1	435033304R1
R8066	CHIP TYPE CARBON RESISTOR	RN72K1J-330JE	1	435033304R1
R8072	CHIP TYPE CARBON RESISTOR	RN72K1J-330JE	1	435033304R1
R8073	CHIP TYPE CARBON RESISTOR	RN72K1J-000JE	1	435030004R1
R8074	CHIP TYPE CARBON RESISTOR	RN72K1J-000JE	1	435030004R1
R8075	CHIP TYPE CARBON RESISTOR	RN72K1J-473JE	1	435034734R1
R8076	CHIP TYPE CARBON RESISTOR	RN72K1J-473JE	1	435034734R1
R8077	CHIP TYPE CARBON RESISTOR	RN72K1J-100JE	1	435031004R1
R8078	CHIP TYPE CARBON RESISTOR	RN72K1J-100JE	1	435031004R1
R8079	CHIP TYPE CARBON RESISTOR	RN72K1J-100JE	1	435031004R1
R8080	CHIP TYPE CARBON RESISTOR	RN72K1J-100JE	1	435031004R1
R8081	CHIP TYPE CARBON RESISTOR	RN72K1J-100JE	1	435031004R1
R8082	CHIP TYPE CARBON RESISTOR	RN72K1J-100JE	1	435031004R1
R8083	CHIP TYPE CARBON RESISTOR	RN72K1J-100JE	1	435031004R1
R8084	CHIP TYPE CARBON RESISTOR	RN72K1J-100JE	1	435031004R1
R8093	CHIP TYPE CARBON RESISTOR	RN72K1J-330JE	1	435033304R1
R8094	CHIP TYPE CARBON RESISTOR	RN72K1J-330JE	1	435033304R1
R8095	CHIP TYPE CARBON RESISTOR	RN72K1J-330JE	1	435033304R1
R8096	CHIP TYPE CARBON RESISTOR	RN72K1J-330JE	1	435033304R1
R8097	CHIP TYPE CARBON RESISTOR	RN72K1J-330JE	1	435033304R1
R8098	CHIP TYPE CARBON RESISTOR	RN72K1J-330JE	1	435033304R1
R8099	CHIP TYPE CARBON RESISTOR	RN72K1J-330JE	1	435033304R1
R8100	CHIP TYPE CARBON RESISTOR	RN72K1J-000JE	1	435030004R1
R8101	CHIP TYPE CARBON RESISTOR	RN72K1J-000JE	1	435030004R1
R8103	CHIP TYPE CARBON RESISTOR	RN72K1J-100JE	1	435031004R1
R8104	CHIP TYPE CARBON RESISTOR	RN72K1J-103JE	1	435031034R1
R8105	CHIP TYPE CARBON RESISTOR	RN72K1J-000JE	1	435030004R1
R8106	CHIP TYPE CARBON RESISTOR	RN72K1J-472JE	1	435034724R1
R8107	CHIP TYPE CARBON RESISTOR	RN72K1J-100JE	1	435031004R1
R8108	CHIP TYPE CARBON RESISTOR	RN72K1J-103JE	1	435031034R1
R8109	CHIP TYPE CARBON RESISTOR	RN72K1J-000JE	1	435030004R1
R8110	CHIP TYPE CARBON RESISTOR	RN72K1J-472JE	1	435034724R1
R8111	CHIP TYPE CARBON RESISTOR	RN72K1J-221JE	1	435032214R1
R8112	CHIP TYPE CARBON RESISTOR	RN72K1J-105JE	1	435031054R1
R8113	CHIP TYPE CARBON RESISTOR	RN72K1J-000JE	1	435030004R1
R8114	CHIP TYPE CARBON RESISTOR	RN72K1J-473JE	1	435034734R1
R8116	CHIP TYPE CARBON RESISTOR	RN72K1J-104JE	1	435031044R1
R8139	CHIP TYPE CARBON RESISTOR	RN72K1J-000JE	1	435030004R1
R8140	CHIP TYPE CARBON RESISTOR	RN72K1J-000JE	1	435030004R1
R8141	CHIP TYPE CARBON RESISTOR	RN72K1J-000JE	1	435030004R1
R8142	CHIP TYPE CARBON RESISTOR	RN72K1J-000JE	1	435030004R1
R8143	CHIP TYPE CARBON RESISTOR	RN72K1J-000JE	1	435030004R1
R8145	CHIP TYPE CARBON RESISTOR	RN72K1J-220JE	1	435032204R1
R8146	CHIP TYPE CARBON RESISTOR	RN72K1J-220JE	1	435032204R1
R8148	CHIP TYPE CARBON RESISTOR	RN72K1J-220JE	1	435032204R1

R8149	CHIP TYPE CARBON RESISTOR	RN72K1J-220JE	1	435032204R1
R8150	CHIP TYPE CARBON RESISTOR	RN72K1J-220JE	1	435032204R1
R8151	CHIP TYPE CARBON RESISTOR	RN72K1J-220JE	1	435032204R1
R8152	CHIP TYPE CARBON RESISTOR	RN72K1J-220JE	1	435032204R1
R8153	CHIP TYPE CARBON RESISTOR	RN72K1J-220JE	1	435032204R1
R8154	CHIP TYPE CARBON RESISTOR	RN72K1J-472JE	1	435034724R1
R8155	CHIP TYPE CARBON RESISTOR	RN72K1J-102JE	1	435031024R1
R8156	CHIP TYPE CARBON RESISTOR	RN72K1J-103JE	1	435031034R1
R8204	CHIP TYPE CARBON RESISTOR	RN72K1J-330JE	1	435033304R1
R8208	CHIP TYPE CARBON RESISTOR	RN72K1J-560JE	1	435035604R1
R8209	CHIP TYPE CARBON RESISTOR	RN72K1J-472JE	1	435034724R1
R8215	CHIP TYPE CARBON RESISTOR	RN72K1J-560JE	1	435035604R1
R8218	CHIP TYPE CARBON RESISTOR	RN72K1J-560JE	1	435035604R1
R8220	CHIP TYPE CARBON RESISTOR	RN72K1J-560JE	1	435035604R1
R8221	CHIP TYPE CARBON RESISTOR	RN72K1J-560JE	1	435035604R1
R8223	CHIP TYPE CARBON RESISTOR	RN72K1J-560JE	1	435035604R1
R8225	CHIP TYPE CARBON RESISTOR	RN72K1J-390JE	1	435033904R1
R8226	CHIP TYPE CARBON RESISTOR	RN72K1J-390JE	1	435033904R1
R8228	CHIP TYPE CARBON RESISTOR	RN72K1J-390JE	1	435033904R1
R8233	CHIP TYPE CARBON RESISTOR	RN72K1J-000JE	1	435030004R1
R8237	CHIP TYPE CARBON RESISTOR	RN72K1J-105JE	1	435031054R1
R8238	CHIP TYPE CARBON RESISTOR	RN72K1J-331JE	1	435033314R1
R8240	CHIP TYPE CARBON RESISTOR	RN72K1J-681JE	1	435036814R1
R8243	CHIP TYPE CARBON RESISTOR	RN72K1J-681JE	1	435036814R1
R8244	CHIP TYPE CARBON RESISTOR	RN72K1J-330JE	1	435033304R1
R8300	CHIP TYPE CARBON RESISTOR	RN72K1J-220JE	1	435032204R1
R8301	CHIP TYPE CARBON RESISTOR	RN72K1J-220JE	1	435032204R1
R8302	CHIP TYPE CARBON RESISTOR	RN72K1J-103JE	1	435031034R1
R8303	CHIP TYPE CARBON RESISTOR	RN72K1J-562JE	1	435035624R1
R8304	CHIP TYPE CARBON RESISTOR	RN72K1J-472JE	1	435034724R1
R8305	CHIP TYPE CARBON RESISTOR	RN72K1J-562JE	1	435035624R1
R8306	CHIP TYPE CARBON RESISTOR	RN72K1J-562JE	1	435035624R1
R8307	CHIP TYPE CARBON RESISTOR	RN72K1J-472JE	1	435034724R1
R8308	CHIP TYPE CARBON RESISTOR	RN72K1J-562JE	1	435035624R1
R8309	CHIP TYPE CARBON RESISTOR	RN72K1J-562JE	1	435035624R1
R8310	CHIP TYPE CARBON RESISTOR	RN72K1J-562JE	1	435035624R1
R8311	CHIP TYPE CARBON RESISTOR	RN72K1J-000JE	1	435030004R1
R8312	CHIP TYPE CARBON RESISTOR	RN72K1J-100JE	1	435031004R1
R8314	CHIP TYPE CARBON RESISTOR	RN72K1J-000JE	1	435030004R1
R8335	CHIP TYPE CARBON RESISTOR	RN72K1J-330JE	1	435033304R1
R8336	CHIP TYPE CARBON RESISTOR	RN72K1J-330JE	1	435033304R1
R8340	CHIP TYPE CARBON RESISTOR	RN72K1J-222JE	1	435032224R1
R8341	CHIP TYPE CARBON RESISTOR	RN72K1J-222JE	1	435032224R1
R8342	CHIP RESISTOR NETWORK	YCN104-220-JK	1	43464C22004R1
R8342 or	CHIP RESISTOR NETWORK	MNR04MRAPJ220	(1)	43464722004R2
R8343	CHIP RESISTOR NETWORK	YCN104-220-JK	1	43464C22004R1
R8343 or	CHIP RESISTOR NETWORK	MNR04MRAPJ220	(1)	43464722004R2
R8346	CHIP TYPE CARBON RESISTOR	RN72K1J-220JE	1	435032204R1
R8350	CHIP TYPE CARBON RESISTOR	RN72K1J-100JE	1	435031004R1
R8353	CHIP TYPE CARBON RESISTOR	RN72K1J-100JE	1	435031004R1
R8354	CHIP TYPE CARBON RESISTOR	RN72K1J-100JE	1	435031004R1
R8355	CHIP TYPE CARBON RESISTOR	RN72K1J-100JE	1	435031004R1
R8356	CHIP TYPE CARBON RESISTOR	RN72K1J-473JE	1	435034734R1
R8357	CHIP TYPE CARBON RESISTOR	RN72K1J-101JE	1	435031014R1
R8358	CHIP TYPE CARBON RESISTOR	RN72K1J-102JE	1	435031024R1
R8359	CHIP TYPE CARBON RESISTOR	RN72K1J-124JE	1	435031244R1
R8361	CHIP TYPE CARBON RESISTOR	RN72K1J-473JE	1	435034734R1
R8362	CHIP TYPE CARBON RESISTOR	RN72K1J-100JE	1	435031004R1
R8363	CHIP RESISTOR NETWORK	YCN104-330-JK	1	43464C33004R1
R8363 or	CHIP RESISTOR NETWORK	MNR04MRAPJ330	(1)	43464733004R2
R8364	CHIP TYPE CARBON RESISTOR	RN72K1J-330JE	1	435033304R1
R8365	CHIP TYPE CARBON RESISTOR	RN72K1J-103JE	1	435031034R1
R8366	CHIP TYPE CARBON RESISTOR	RN72K1J-330JE	1	435033304R1
R8367	CHIP TYPE CARBON RESISTOR	RN72K1J-330JE	1	435033304R1
R8368	CHIP TYPE CARBON RESISTOR	RN72K1J-330JE	1	435033304R1
R8369	CHIP TYPE CARBON RESISTOR	RN72K1J-100JE	1	435031004R1
R8370	CHIP TYPE CARBON RESISTOR	RN72K1J-000JE	1	435030004R1

R8371	CHIP TYPE CARBON RESISTOR	RN72K1J-100JE	1	435031004R1	
R8372	CHIP TYPE CARBON RESISTOR	RN72K1J-100JE	1	435031004R1	
R8373	CHIP TYPE CARBON RESISTOR	RN72K1J-100JE	1	435031004R1	
R8374	CHIP TYPE CARBON RESISTOR	RN72K1J-100JE	1	435031004R1	
R8603	CHIP TYPE CARBON RESISTOR	RN72K1J-473JE	1	435034734R1	
R8604	CHIP TYPE CARBON RESISTOR	RN72K1J-473JE	1	435034734R1	
R8605	CHIP TYPE CARBON RESISTOR	RN72K1J-100JE	1	435031004R1	
R8613	CHIP TYPE CARBON RESISTOR	RN72K1J-473JE	1	435034734R1	
R8614	CHIP TYPE CARBON RESISTOR	RN72K1J-473JE	1	435034734R1	
R8615	CHIP TYPE CARBON RESISTOR	RN72K1J-000JE	1	435030004R1	
R8623	CHIP TYPE CARBON RESISTOR	RN72K1J-473JE	1	435034734R1	
R8624	CHIP TYPE CARBON RESISTOR	RN72K1J-473JE	1	435034734R1	
R8625	CHIP TYPE CARBON RESISTOR	RN72K1J-000JE	1	435030004R1	
R8633	CHIP TYPE CARBON RESISTOR	RN72K1J-473JE	1	435034734R1	
R8634	CHIP TYPE CARBON RESISTOR	RN72K1J-473JE	1	435034734R1	
R8635	CHIP TYPE CARBON RESISTOR	RN72K1J-000JE	1	435030004R1	
R8643	CHIP TYPE CARBON RESISTOR	RN72K1J-473JE	1	435034734R1	
R8644	CHIP TYPE CARBON RESISTOR	RN72K1J-473JE	1	435034734R1	
R8645	CHIP TYPE CARBON RESISTOR	RN72K1J-100JE	1	435031004R1	
R8653	CHIP TYPE CARBON RESISTOR	RN72K1J-473JE	1	435034734R1	
R8654	CHIP TYPE CARBON RESISTOR	RN72K1J-473JE	1	435034734R1	
R8655	CHIP TYPE CARBON RESISTOR	RN72K1J-100JE	1	435031004R1	
R8663	CHIP TYPE CARBON RESISTOR	RN72K1J-473JE	1	435034734R1	
R8664	CHIP TYPE CARBON RESISTOR	RN72K1J-473JE	1	435034734R1	
R8665	CHIP TYPE CARBON RESISTOR	RN72K1J-100JE	1	435031004R1	
R8700	CHIP TYPE CARBON RESISTOR	RN72K1J-103JE	1	435031034R1	
R8702	CHIP TYPE CARBON RESISTOR	RN72K1J-000JE	1	435030004R1	
R8703	CHIP RESISTOR NETWORK	YCN104-103-JK	1	43464C10304R1	
R8703 or	CHIP RESISTOR NETWORK	MNR04MRAPJ103	(1)	43464710304R2	
R8704	CHIP TYPE CARBON RESISTOR	RN72K1J-103JE	1	435031034R1	
R8705	CHIP TYPE CARBON RESISTOR	RN72K1J-102JE	1	435031024R1	
R8706	CHIP TYPE CARBON RESISTOR	RN72K1J-103JE	1	435031034R1	
R8707	CHIP TYPE CARBON RESISTOR	RN72K1J-103JE	1	435031034R1	
R8708	CHIP RESISTOR NETWORK	YCN104-101-JK	1	43464C10104R1	
R8708 or	CHIP RESISTOR NETWORK	MNR04MRAPJ101	(1)	43464710104R2	**N**
R8709	CHIP TYPE CARBON RESISTOR	RN72K1J-470JE	1	435034704R1	
R8710	CHIP TYPE CARBON RESISTOR	RN72K1J-104JE	1	435031044R1	
R8711	CHIP TYPE CARBON RESISTOR	RN72K1J-332JE	1	435033324R1	
R8712	CHIP TYPE CARBON RESISTOR	RN72K1J-470JE	1	435034704R1	
R8713	CHIP TYPE CARBON RESISTOR	RN72K1J-101JE	1	435031014R1	
R8714	CHIP TYPE CARBON RESISTOR	RN72K1J-682FE	1	435036822R1	
R8715	CHIP TYPE CARBON RESISTOR	RN72K1J-332FE	1	435033322R1	
R8716	CHIP TYPE CARBON RESISTOR	RN72K1J-222JE	1	435032224R1	
R8717	CHIP TYPE CARBON RESISTOR	RN72K1J-222JE	1	435032224R1	
R8718	CHIP TYPE CARBON RESISTOR	RN72K1J-222JE	1	435032224R1	
R8719	CHIP TYPE CARBON RESISTOR	RN72K1J-222JE	1	435032224R1	
R8720	CHIP TYPE CARBON RESISTOR	RN72K1J-103JE	1	435031034R1	
R8721	CHIP TYPE CARBON RESISTOR	RN72K1J-103FE	1	435031032R1	
R8724	CHIP TYPE CARBON RESISTOR	RN72K1J-473JE	1	435034734R1	
R8725	CHIP TYPE CARBON RESISTOR	RN72K1J-103JE	1	435031034R1	
R8727	CHIP TYPE CARBON RESISTOR	RN72K1J-221JE	1	435032214R1	
R8729	CHIP TYPE CARBON RESISTOR	RN72K1J-470JE	1	435034704R1	
R8730	CHIP TYPE CARBON RESISTOR	RN72K1J-470JE	1	435034704R1	
R8731	CHIP RESISTOR NETWORK	YCN104-103-JK	1	43464C10304R1	
R8731 or	CHIP RESISTOR NETWORK	MNR04MRAPJ103	(1)	43464710304R2	
R8732	CHIP TYPE CARBON RESISTOR	RN72K1J-221JE	1	435032214R1	
R8733	CHIP TYPE CARBON RESISTOR	RN72K1J-105JE	1	435031054R1	
R8734	CHIP TYPE CARBON RESISTOR	RN72K1J-470JE	1	435034704R1	
R8735	CHIP TYPE CARBON RESISTOR	RN72K1J-221JE	1	435032214R1	
R8736	CHIP TYPE CARBON RESISTOR	RN72K1J-102JE	1	435031024R1	
R8738	CHIP TYPE CARBON RESISTOR	RN72K1J-103JE	1	435031034R1	
R8739	CHIP TYPE CARBON RESISTOR	RN72K1J-102JE	1	435031024R1	
R8740	CHIP TYPE CARBON RESISTOR	RN72K1J-103JE	1	435031034R1	
R8741	CHIP TYPE CARBON RESISTOR	RN72K1J-102JE	1	435031024R1	
R8742	CHIP TYPE CARBON RESISTOR	RN72K1J-103JE	1	435031034R1	
R8743	CHIP TYPE CARBON RESISTOR	RN72K1J-103JE	1	435031034R1	
R8744	CHIP TYPE CARBON RESISTOR	RN72K1J-103FE	1	435031032R1	

R8745	CHIP TYPE CARBON RESISTOR	RN72K1J-103JE	1	435031034R1	
R8746	CHIP TYPE CARBON RESISTOR	RN72K1J-470JE	1	435034704R1	
R8753	CHIP TYPE CARBON RESISTOR	RN72K1J-103JE	1	435031034R1	
R8754	CHIP TYPE CARBON RESISTOR	RN72K1J-047JE	1	435030474R1	
R8755	CHIP TYPE CARBON RESISTOR	RN72K1J-103JE	1	435031034R1	
R8756	CHIP TYPE CARBON RESISTOR	RN72K1J-103JE	1	435031034R1	
R8757	CHIP TYPE CARBON RESISTOR	RN72K1J-333JE	1	435033334R1	
R8790	CHIP TYPE CARBON RESISTOR	RN72K1J-470JE	1	435034704R1	
R8791	CHIP TYPE CARBON RESISTOR	RN72K1J-470JE	1	435034704R1	
R8792	CHIP TYPE CARBON RESISTOR	RN72K1J-103JE	1	435031034R1	
R8793	CHIP TYPE CARBON RESISTOR	RN72K1J-473JE	1	435034734R1	
R8794	CHIP TYPE CARBON RESISTOR	RN72K1J-104JE	1	435031044R1	
R8795	CHIP TYPE CARBON RESISTOR	RN72K1J-104JE	1	435031044R1	
R8796	CHIP TYPE CARBON RESISTOR	RN72K1J-473JE	1	435034734R1	
R8797	CHIP TYPE CARBON RESISTOR	RN72K1J-103JE	1	435031034R1	
R8798	CHIP TYPE CARBON RESISTOR	RN72K1J-104JE	1	435031044R1	
R8799	CHIP TYPE CARBON RESISTOR	RN72K1J-472JE	1	435034724R1	
R8800	CHIP TYPE CARBON RESISTOR	RN72K1J-473JE	1	435034734R1	
R8931	CHIP TYPE CARBON RESISTOR	RN72K1J-102JE	1	435031024R1	
R8932	CHIP TYPE CARBON RESISTOR	RN72K1J-104JE	1	435031044R1	
R8933	CHIP TYPE CARBON RESISTOR	RN72K1J-332JE	1	435033324R1	
R8934	CHIP TYPE CARBON RESISTOR	RN72K1J-272FE	1	435032722R1	
R8935	CHIP TYPE CARBON RESISTOR	RN72K1J-222FE	1	435032222R1	
R8936	CHIP TYPE CARBON RESISTOR	RN72K1J-103FE	1	435031032R1	
R8942	CHIP TYPE CARBON RESISTOR	RN72K1J-473JE	1	435034734R1	
R8943	CHIP TYPE CARBON RESISTOR	RN72K1J-472JE	1	435034724R1	
R8944	CHIP TYPE CARBON RESISTOR	RN72K1J-103FE	1	435031032R1	
R8946	CHIP TYPE CARBON RESISTOR	RN72K1J-103FE	1	435031032R1	
R8952	CHIP TYPE CARBON RESISTOR	RN72K1J-473JE	1	435034734R1	
R8953	CHIP TYPE CARBON RESISTOR	RN72K1J-682JE	1	435036824R1	
R8954	CHIP TYPE CARBON RESISTOR	RN72K1J-333FE	1	435033332R1	
R8955	CHIP TYPE CARBON RESISTOR	RN72K1J-124FE	1	435031242R1	
R8956	CHIP TYPE CARBON RESISTOR	RN72K1J-103FE	1	435031032R1	
R8961	CHIP TYPE CARBON RESISTOR	RN72K1J-104JE	1	435031044R1	
R8962	CHIP TYPE CARBON RESISTOR	RN72K1J-104JE	1	435031044R1	
R8964	CHIP TYPE CARBON RESISTOR	RN72K1J-473FE	1	435034732R1	
R8965	CHIP TYPE CARBON RESISTOR	RN72K1J-225JE	1	435032254R1	
R8966	CHIP TYPE CARBON RESISTOR	RN72K1J-103FE	1	435031032R1	
R8970	CHIP TYPE CARBON RESISTOR	RN72K1J-472JE	1	435034724R1	
R8971	CHIP TYPE CARBON RESISTOR	RN72K1J-472JE	1	435034724R1	
R8982	CHIP TYPE CARBON RESISTOR	RN72K1J-104JE	1	435031044R1	
R8983	CHIP TYPE CARBON RESISTOR	RN72K1J-473JE	1	435034734R1	
[SW TRM]					
P2800B	SOCKET	IMSA-9618S-13A	1	25053338R2	
P3100	SOCKET	UJA01SB4090-72R	1	25053533R2	**N**
P3102A	PLUG	NPLG-5P918	1	25055965R2	
P3103A	SOCKET	NSCT-9P2472	1	25052575R2	
P3104	SOCKET	29-01000PH53-1	1	25053526R3	
P501B	PLUG	NPLG-3P916	1	25055963R2	
P701A	SOCKET	IMSA-9618S-23A	1	25053348R2	
P7050A	SOCKET	IMSA-9618S-09A	1	25053334R2	
P751A	SOCKET	NSCT-9P2472	1	25052575R2	
P8001	SOCKET	51U019S-3HFDN-BD-SM	1	25053549R3	**N**
P8001 or	SOCKET	HDMI(47266-4101)	(1)	25053389R3	
P8001 or	SOCKET	TCX3423-311387	(1)	25060513R3	
P8002B	PLUG(B to B)	IMSA-9850B-26Y	1	25056208R2	**N**
P8003B	PLUG(B to B)	IMSA-9850B-24Y	1	25056207R2	
P801B	PLUG	NPLG-9P922	1	25055969R2	
P8021	SOCKET	51U019S-3HFDN-BD-SM	1	25053549R3	
P8021 or	SOCKET	HDMI(47266-4101)	(1)	25053389R3	
P8021 or	SOCKET	TCX3423-311387	(1)	25060513R3	
P8601	SOCKET	51U019S-3HFDN-BD-SM	1	25053549R3	
P8601 or	SOCKET	HDMI(47266-4101)	(1)	25053389R3	
P8601 or	SOCKET	TCX3423-311387	(1)	25060513R3	
P8611	SOCKET	51U019S-3HFDN-BD-SM	1	25053549R3	**N**
P8611 or	SOCKET	HDMI(47266-4101)	(1)	25053389R3	
P8611 or	SOCKET	TCX3423-311387	(1)	25060513R3	

P8621	SOCKET	51U019S-3HFDN-BD-SM	1	25053549R3	N
P8621 or	SOCKET	HDMI(47266-4101)	(1)	25053389R3	
P8621 or	SOCKET	TCX3423-311387	(1)	25060513R3	
P8631	SOCKET	51U019S-3HFDN-BD-SM	1	25053549R3	N
P8631 or	SOCKET	HDMI(47266-4101)	(1)	25053389R3	
P8631 or	SOCKET	TCX3423-311387	(1)	25060513R3	
P8641	SOCKET	51U019S-3HFDN-BD-SM	1	25053549R3	N
P8641 or	SOCKET	HDMI(47266-4101)	(1)	25053389R3	
P8641 or	SOCKET	TCX3423-311387	(1)	25060513R3	
P8651	SOCKET	51U019S-3HFDN-BD-SM	1	25053549R3	N
P8651 or	SOCKET	HDMI(47266-4101)	(1)	25053389R3	
P8651 or	SOCKET	TCX3423-311387	(1)	25060513R3	
P8661	SOCKET	51U019S-3HFDN-BD-SM	1	25053549R3	N
P8661 or	SOCKET	HDMI(47266-4101)	(1)	25053389R3	
P8661 or	SOCKET	TCX3423-311387	(1)	25060513R3	
P8671	SOCKET	51U019S-3HFDN-BD-SM	1	25053549R3	
P8671 or	SOCKET	HDMI(47266-4101)	(1)	25053389R3	
P8671 or	SOCKET	TCX3423-311387	(1)	25060513R3	
P8710	PLUG	NPLG-2P915	1	25055962R2	
P9011B	PLUG	NPLG-5P918	1	25055965R2	

U006 BAHDM-1770-1A : NSP

CIRCUIT NC	PART NAME	DESCRIPTION	Q'TY	PART NO. (SN)	REMARKS
[SEMI CONDUCTOR]					
Q8500	HYBRID IC	PCA9515BDGKR	1	22242895R2	
[TRANS COIL]					
L8500	CORE	BLM15PX181SN1D	1	2350033R1	
[CAPACITOR]					
C794	CHIP TYPE CERAMIC CAPACITOR	CK725B1H-103K0	1	332031035R1	
C795	CHIP TYPE CERAMIC CAPACITOR	CK725B1H-103K0	1	332031035R1	
C796	CHIP TYPE CERAMIC CAPACITOR	CK725B1H-103K0	1	332031035R1	
C799	CHIP TYPE CERAMIC CAPACITOR	CK732B16V-106K	1	332071065R2	
C8501	CHIP TYPE CERAMIC CAPACITOR	CK725B1H-102K0	1	332031025R1	
C8502	CHIP TYPE CERAMIC CAPACITOR	CK725B1H-102K0	1	332031025R1	
C8503	CHIP TYPE CERAMIC CAPACITOR	CK725B1C-104K0	1	332011045R1	
C8504	CHIP TYPE CERAMIC CAPACITOR	CK732B16V-106K	1	332071065R2	
[RESISTOR]					
R8503	CHIP TYPE CARBON RESISTOR	RN72K1J-473JE	1	435034734R1	
R8504	CHIP TYPE CARBON RESISTOR	RN72K1J-473JE	1	435034734R1	
R8505	CHIP TYPE CARBON RESISTOR	RN72K1J-472JE	1	435034724R1	
R8506	CHIP TYPE CARBON RESISTOR	RN72K1J-472JE	1	435034724R1	
R8507	CHIP TYPE CARBON RESISTOR	RN72K1J-473JE	1	435034734R1	
[SW TRM]					
P3102B	PLUG	NPLG-5P918	1	25055965R2	
P791A	SOCKET	DF40HC(2.5)-30DS-0.4V(70)	1	25053514R2	
P8500	SOCKET	TCX3255-611187	1	25053413R3	
P8501	SOCKET	TCX3423-311387	1	25060513R3	