ONKYO SERVICE MANUAL

REF. NO. 3492

COMPACT DISC PLAYER

MODEL DX-C120

MODEL DX-C220

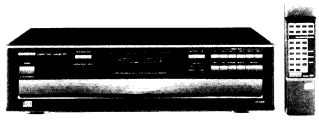

MODEL DX-C320

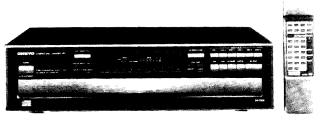

BMD, BMDN	120V AC, 60Hz
BMP	230V AC, 50Hz
only DX-C220	120/220V AC, 50/60Hz

SAFETY-RELATED COMPONENT WARNING!!

COMPONENTS IDENTIFIED BY MARK ⚠ ON THE SCHEMATIC DIAGRAM AND IN THE PARTS LIST ARE CRITICAL FOR RISK OF FIRE AND ELECTRIC SHOCK. REPLACE THESE COMPONENTS WITH ONKYO PARTS WHOSE PART NUMBERS APPEAR AS SHOWN IN THIS MANUAL.

MAKE LEAKAGE-CURRENT OR RESISTANCE MEASUREMENTS TO DETERMINE THAT EXPOSED PARTS ARE ACCEPTABLY INSULATED FROM THE SUPPLY CIRCUIT BEFORE RETURNING THE APPLIANCE TO THE CUSTOMER.

ONKYO®
AUDIO COMPONENTS

SPECIFICATIONS

Compact Disc Automatic Changer Model DX-C320/C220/C120

Signal readout system:	Optical non-contact
Reading rotation:	About 500 - 200 r.p.m. (constant linear velocity)
Linear velocity:	1.2 - 1.4 m/s
Error correction system:	Cross Interleave Reed-Solomon code
D/A converter:	1 bit PWM/ACCUPULSE
Sampling frequency:	352.8 kHz (8 times oversampling)
Number of channels:	2 (stereo)
Frequency response:	2Hz - 20kHz
Total harmonic distortion:	0.004% (at 1kHz)
Dynamic range:	96dB
Signal to noise ratio:	96dB
Channel separation:	90dB (at 1kHz)
Wow and Flutter:	Below threshold of measurability
Output level:	2 volts r.m.s.
Power consumption:	13 watts
Power supply rating:	European and Australian models: AC 230V, 50Hz USA and Canadian models: AC 120V, 60Hz Worldwide model: AC 120V and 220V
Dimensions (W × H × D):	455 × 120 × 425 mm (17-15/16" × 4-3/4" × 16-11/16")
Weight:	7.4 kg (16.3 lbs)

Specifications and external appearance are subject to change without notice because of product improvements.

TABLE OF CONTENTS

Specifications 1
Service procedures 2
Caution on replacement of optical pickup.....2
Protection of eyes from laser beam.....3
Laser warning labels 3
IC block diagrams and descriptions 4
Packing view.....9
Pick-up drive unit 10
Chassis-exploded view.....13
Parts list.....15
Block diagram.....17
Adjustment procedures 19
Printed circuit board view from bottom side 21
Printed circuit board-parts list.....23
Control position and names 27

SERVICE PROCEDURES

1. Safety-check out

After correcting the original service problem,perform the following safety check before releasing the set to the customer:

Connect the insulating-resistance tester between the plug of power supply cord and chassis.

Specifications:More than 10Mohm at 500V.

2. Voltage Selector (Back panel)

Worldwide models are equipped with a voltage selector to conform with local power supplies.Be sure to set this switch to match the voltage of the power supply in user's area before turning the power switch on.

Voltage is changed by sliding the groove in the switch with a screw driver to the right or left.

Confirm that the switch has been moved all the way to the right or left before turning the power switch on.

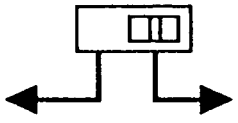

at AC120V

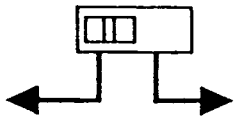

at AC220V

CAUTION ON REPLACEMENT OF OPTICAL PICK UP

The laser diode in the optical pickup block is so sensitive to static electricity,surge current and etc, that the components are liable to be broken down or its reliability remarkably deteriorated.

During repair,carefulley take the following precautions. (The following precautions are included in the service parts.)

PRECAUTIONS

1.Ground for the work-desk.
Place a conductive sheet such as a sheet of copper (with inpedance lower than 10MΩ) on the work-desk and place the set on the conductive sheet so that the chassis.

2.Grounding for the test equipment and tools.
Test equipments and toolings should be grounded in order that their ground level is the same the ground of the power source.

3.Grounding for the human body.
Be sure to put on a wrist-strap for grounding whose other end is grounded.
Be particularly careful when the workers wear synthetic fiber clothes, or air is dry.

4.Select a soldering iron that permits no leakage and have the tip of the iron well-grounded.

5.Do not check the laser diode terminals with the probe of a circuit tester or oscilloscope.

PROTECTION OF EYES FROM LASER BEAM DURING SERVICING

This set employs a laser. Therefore, be sure to follow carefully the instructions below when servicing.

WARNING!!

WHEN SERVICING, DO NOT APPROACH THE LASER EXIT WITH THE EYE TOO CLOSELY. IN CASE IT IS NECESSARY TO CONFIRM LASER BEAM EMMISION, BE SURE TO OBSERVE FROM A DISTANCE OF MORE THAN 30cm FROM THE SURFACE OF THE OBJECTIVE LENS ON THE OPTICAL PICK-UP BLOCK.

Laser Diode Properties

- Material: GaAlAs
- Wavelength: 760~800nm
- Emission Duration: continuous
- Laser output: max. 0.5mW*

  *This output is the value measured at a distance about 1.8mm from the objective lens surface on the Optical Pick-up Block.

LASER WARNING LABEL

These labels are located on the mechanism.

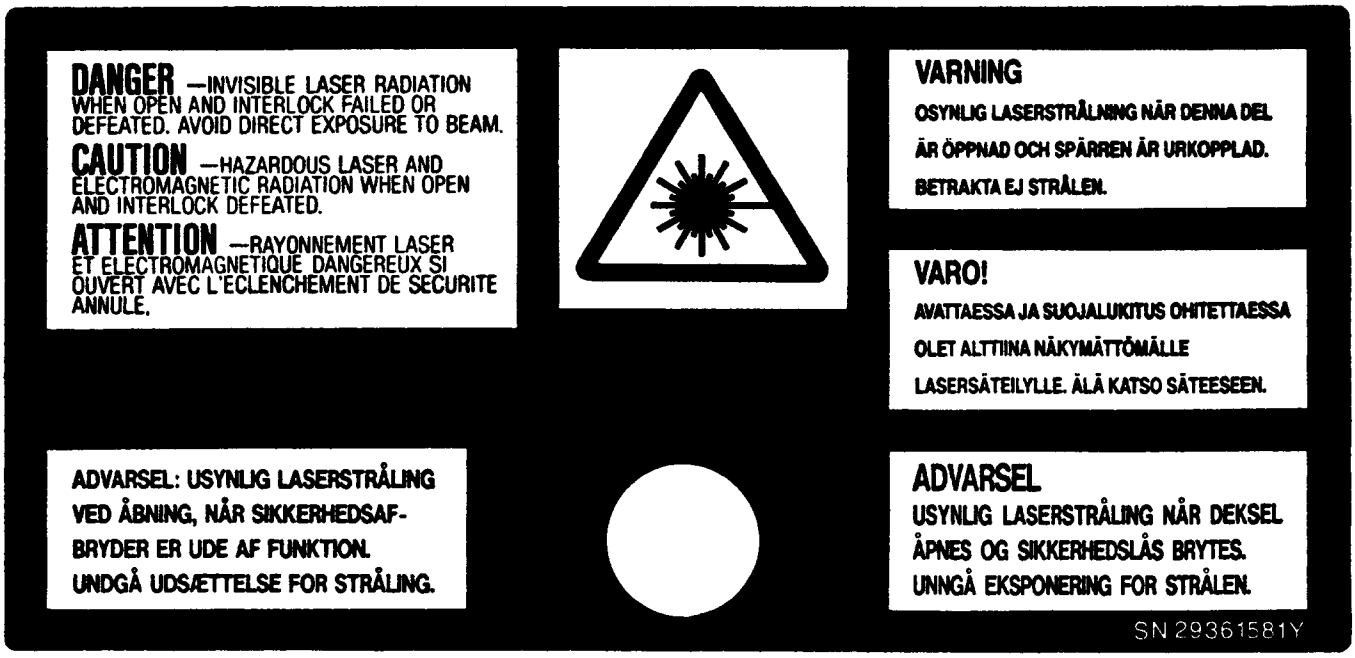

IC BLOCK DIAGRAMS AND DESCRIPTIONS

CXD2500AQ (Digital Signal Processor)

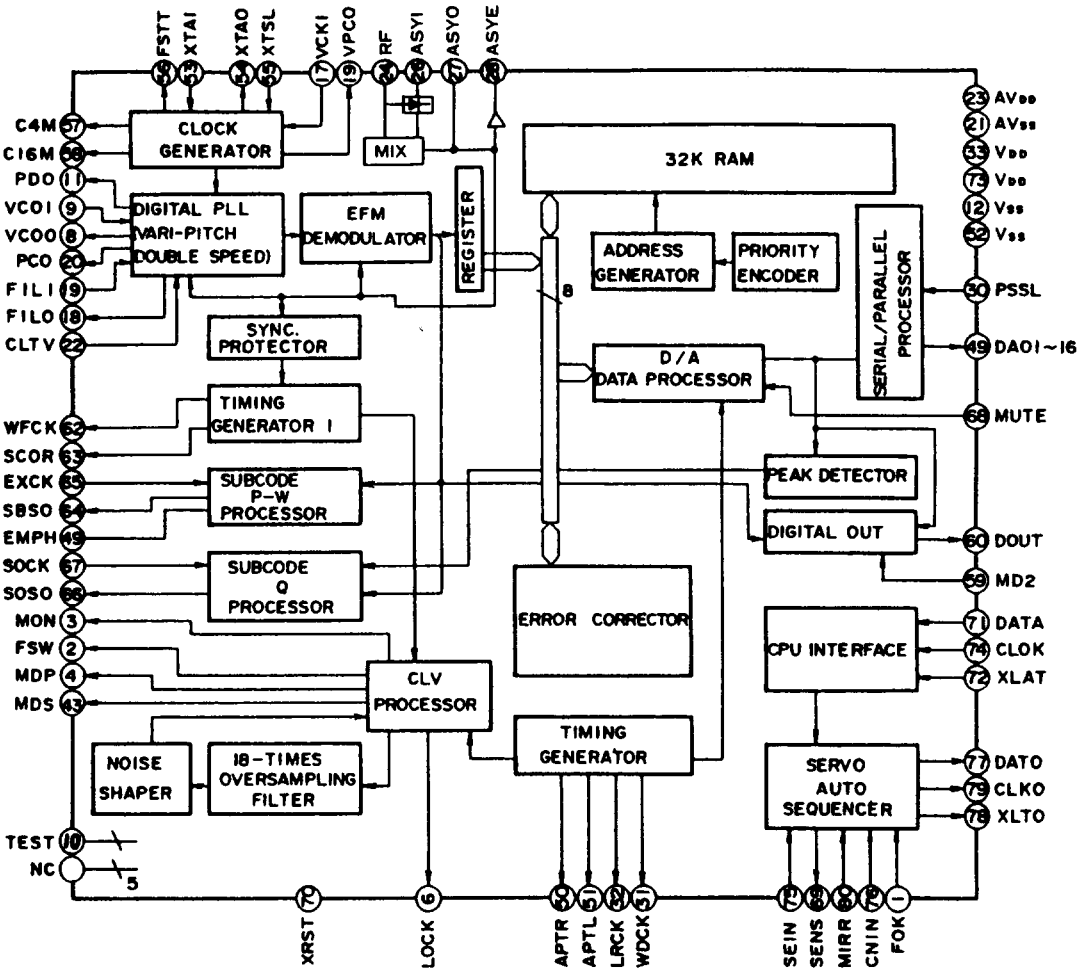

TA-7291S (Motor Drive)

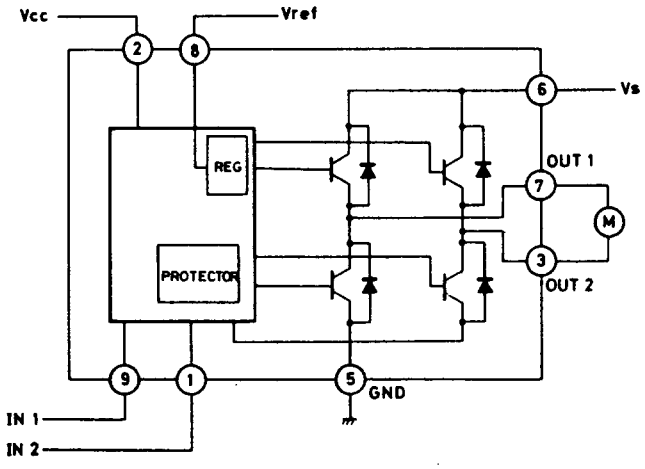

NO.	SYMBOL	I/O	DESCRIPTION
1	FOK	I	Foucs Ok input
2	FSW	O	Output filter changeover output for spindle motor
3	MON	O	Spindle motor control output
4	MDP	O	Spindle motor servo control
5	MDS	O	Spindle motor servo control
6	LOCK	O	H when GFS is the high level
7	NC		
8	VCOO	O	Oscillation circuit output for analog EFM PLL.
9	VCOI	I	Oscillation circuit input for analog EFM PLL. (8.6436MHz)
10	TEST	I	Test terminal
11	PDO	O	Charge pump output analog EFM PLL
12	Vss		Ground terminal
13-15	NC		
16	VPCO	O	PLL charge pump output for variable pitch
17	VCKI	I	Clock input for variable pitch from VCO (16.934MHz)
18	FILO	O	Filter output for master PLL.
19	FILI	I	Filter input for master PLL.
20	PCO	O	Charge pump output of master PLL
21	AVss		Analog ground
22	CLTV	I	VCO control voltage input for master
23	AVDD		Analog section power supply (+5V)
24	RF	I	EFM signal input
25	BIAS	I	Asymmetry circuit constant current input
26	ASYI	I	Asymmetry comparator voltage input
27	ASYO	O	EFM full swing output
28	ASYE	I	Asymmetry control circuit
29	NC		
30	PSSL	O	Audio data output mode changeover input Serial data at L and paraller data at H.
31	WDCK	I	D/A interface for 48 bits slot. Word clock f=2Fs.
32	LRCK	I	D/A interface for 48 bits slot. LR clock f=Fs.
33	VDD		Power supply terminal (+5V)
34-49			Data output terminals
			PSSL=1 / PSSL=0
34	DA16	O	DA16 / Serial data of 48 bits slot
35	DA15	O	DA15 / Bit clock of 48 bits slot
36	DA14	O	DA14 / Serial data of 64 bits slot
37	DA13	O	DA13 / Bit clock of 68 bits slot
38	DA12	O	DA12 / LR clock of 68 bits slot
39	DA11	O	DA11 / GTOP output
40	DA10	O	DA10 / XUGF output
41	DA09	O	DA09 / XPLCK output

NO.	SYMBOL	I/O	DESCRIPTION
42	DA08	O	DA08 / GFS output
43	DA07	O	DA07 / RFCK output
44	DA06	O	DA06 / C2P0 output
45	DA05	O	DA05 / XRAOF output
46	DA04	O	DA04 / MNT 3 output
47	DA03	O	DA03 / MNT 2 output
48	DA02	O	DA02 / MNT 1 output
49	DA01	O	DA01 / MNT 0 output
50	APTR	O	Control output for aperture correction. H when R ch.
51	APTL	O	Control output for aperture correction. H when L ch.
52	Vss		Ground terminal
53	XTAI	I	Crystal oscillation circuit input of 16.9344MHz or 33.8688MHz input.
54	XTAO	O	Crystal oscillation circuit output of 16.9344MHz.
55	XTSL	I	Crystal selection input terminal. L when 16.9344MHz. H when 33.8688MHz.
56	FSTT	O	2/3 divided output of pins 53 and 54.
57	C4M	O	4.2336 MHz output
58	C16M	O	16.9344 MHz output
59	MD2	I	Digital output control input. On at high level.
60	DOUT	O	Digital output
61	EMPH	O	Emphasis control output. Active high.
62	WFCK	O	Write frame clock output
63	SCOR	O	Sub-code detection output. H when is detected SO or SI.
64	SBSO	O	Serial output of sub-code (P~W)
65	EXCK	I	Clock input for read out SQSO.
66	SQSO	O	Sub Q 80 bits, PCM peak, and level data 16 bits output.
67	SQCK	I	Clock input for read out SQSO
68	MUTE	O	Muting control output. Active H.
69	SENS		Sens output. Output to the microprocessor
70	XRST	I	System reset. Reset at the low level.
71	DATA	I	Serial data input from the microprocessor.
72	XLTA	I	Latch input from the microprocessor. Latch the serial data at the trailing.
73	VDD		Power supply treminal
74	CLOK	I	Serial data transfer clock input from microprocessor
75	SEIN	I	Sens input from SSP
76	CNCI	I	Track jump numbers count signal input
77	DATO	O	Serial data output to SSP
78	XLTO	O	Serial data latch output to SSP. Latch at trailing.
79	CLKO	O	Serial data transfer clock output to SSP.
80	MIRR	I	Mirror signal input

Note: SSP: IC101 CXA1372Q

BA6191 (Motor Drive)

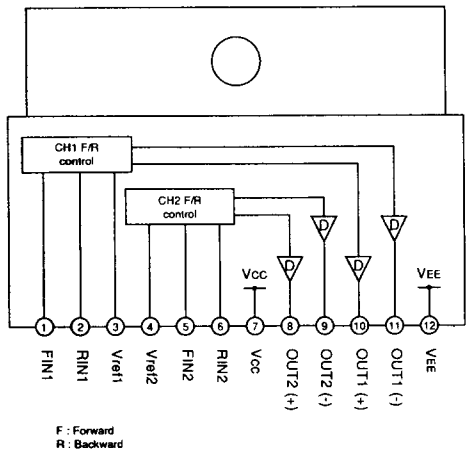

F : Forward
R : Backward

CXA1372Q (Servo Signal Processor)

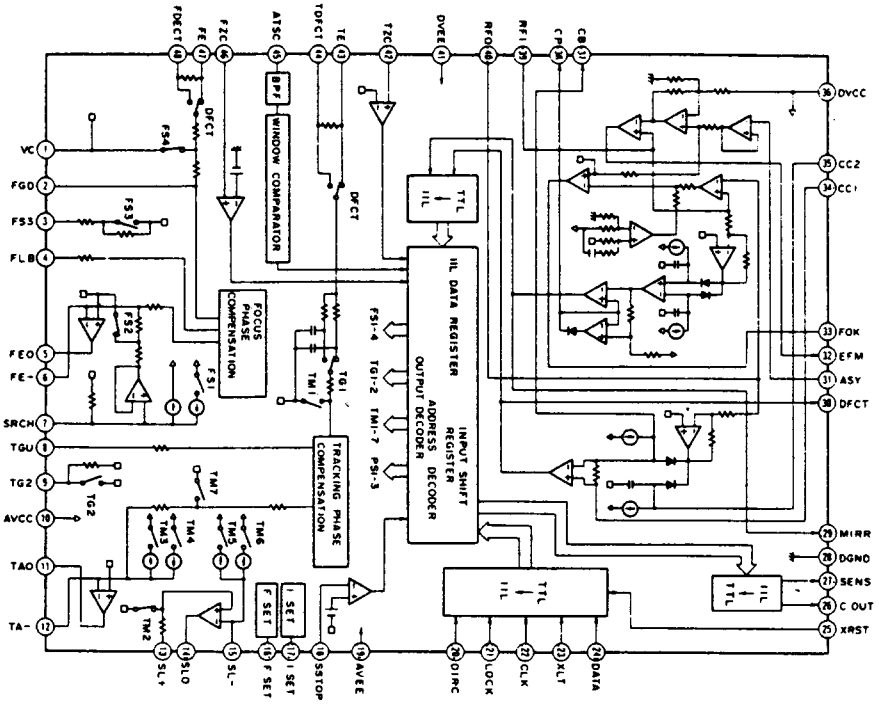

PIN NO.	SYMBOL	I/O	DESCIRPION
1	VC	I	Mid-point voltage input terminal.
2	FGD	I	Connect the capacitor between FS3 and this pin when the high frequency gain focus servo is dropped.
3	FS3	I	Focus servo high frequency gain changeover input terminal.
4	FLB	I	Input terminal for the low frequency boost of focus servo.
5	FEO	O	Focus drive output terminal.
6	FE-	I	Inversion input terminal of focus amplifier.
7	SRCH	I	Time constant terminal to make the focus search waveform.
8	TGU	I	Tracking high frequency changeover input terminal.
11	TAO	O	Tracking drive output terminal.
12	TA-	I	Inversion input terminal of tracking amplifier.
13	SL+	I	No-inversion input terminal of sled amplifier.
14	SLO	O	Sled drive output terminal.
15	SL-	I	Inversion input terminal of sled amplifier.
16	FSET	I	Peak setting input of phase correction of focus tracking.
17	ISET	I	This terminal is flowed the current so that the focus search,tarcking jump,and sled kick height is decided.
18	SSTOP	I	Inner switch selection input terminal.
20	DIRC	I	This terminal is used when track jump.
21	LOCK	I	The sled runaway prevention circuit operates at the low level.
22	CLK	I	Serial data transfer clock input from microprocessor.

PIN NO.	SYMBOL	I/O	DESCIRPION
23	XLT	I	Latch input terminal for microprocessor.
24	DATA	I	Serial data input terminal for microprocessor.
25	XRST	I	Reset input terminal.Active low.
26	C.OUT	O	Signal output to count the track numbers.
27	SENS	O	This terminal outputs FZC,and SSTOP to according command from the microprocessor.
29	MIRR	O	Mirror comparator output terminal.
30	DFCT	O	Defect comparator output terminal.
31	ASY	I	Auto asymmetry control input terminal.
32	EFM	O	EFM comparator output terminal.
33	FOK	O	Focus OK comparator output terminal.
34	CC1	O	Defect bottom hold output terminal.
35	CC2	I	Defect bottom hold input terminal from CC1.
37	CB	I	Defect bottom hold capacitor connection terminal.
38	CP	I	Mirror hold capacitor connection terminal.
39	RFI	I	RF summing amplifier input terminal.
40	RFO	O	RF summing amplifier output terminal.
42	TZC	I	Tracking zero-cross comparator input terminal.
43	TE	I	Tracking error input terminal.
44	TDFCT	I	Capacitor connection terminal for time constant when defect.
45	ATSC	I	Window comparator input terminal for ATSC detection.
46	FZC	I	Focos zero-cross comparator input terminal.
47	FE	I	Focus error input terminal.
48	FDFCT	I	Capacitor connection terminal for time constant when defect.

SM5872CN (D/A Converter)

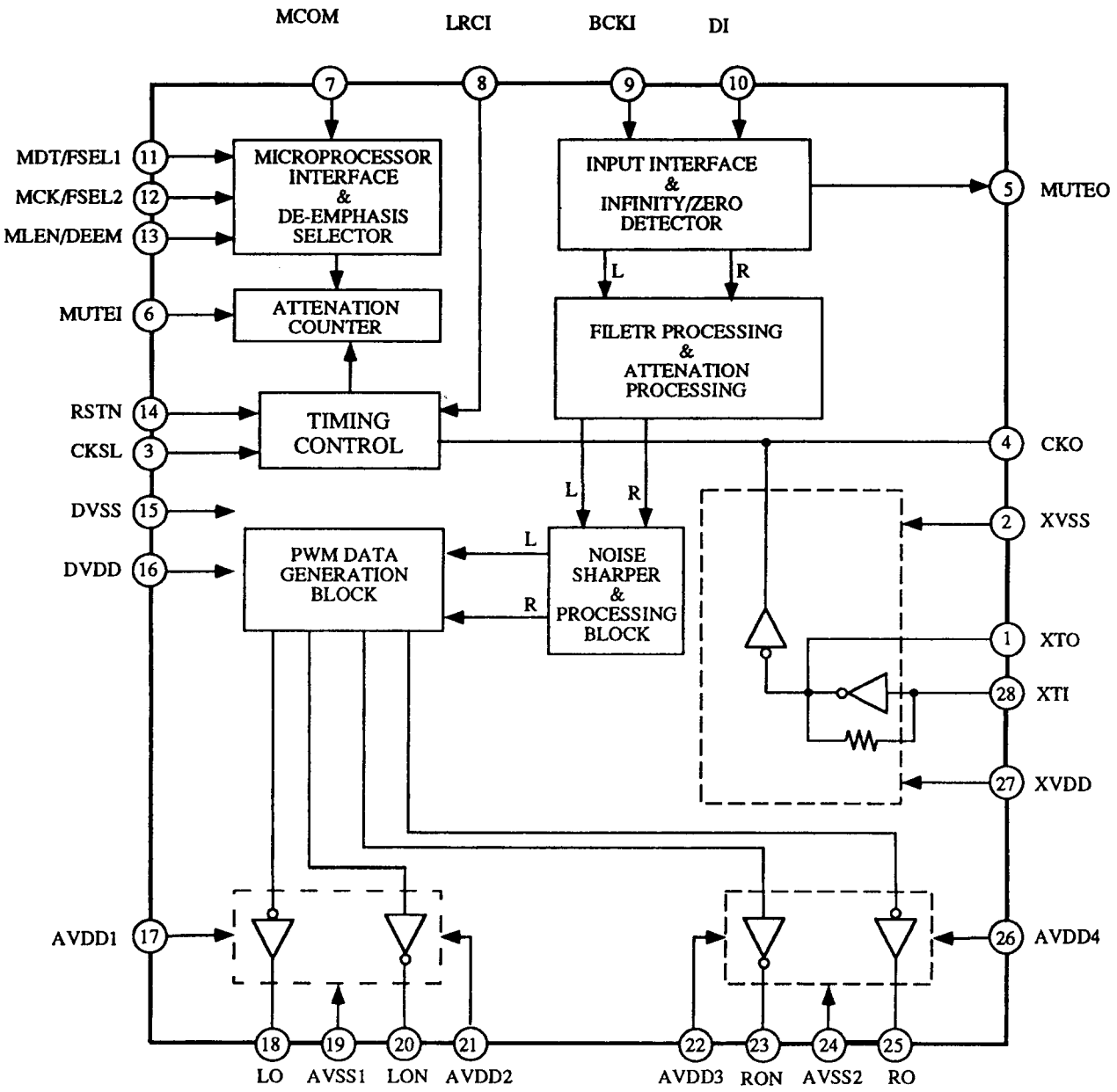

Pin No.	Terminal	I/O	Function	Pin No.	Terminal	I/O	Function
1	XTO	O	Resonator section	28	XTI	I	Resonator section
2	XVSS		Ground for resonator system	27	XVDD		5V for resonator system
3	CKSL	I		26	AVDD4		5V for analog section
4	CKO	O	Output clock of resonator section: 384fs	25	RO	O	R ch PWM output (+)
5	MUTEO	O	Infinity zero detector output	24	AVSS2		Ground for analog section
6	MUTEI	I	Muting output	23	RON	O	R ch PWM output (-)
7	MCOM	I	Interface switching control	22	AVDD3		5V for analog section
8	LRCI	I	Sampling rate clock of input data: H=L ch, L=R ch	21	AVDD2		5V for analog section
9	BCKI	I	Bit clock of input data	20	LON	O	L ch PWM output (+)
10	DI	I	Input data	19	AVSS1		Ground for analog section
11	FSEL1	I	Sampling frequency=44.1 kHz	18	LO	O	L ch PWM output (-)
12	FSEL2	I	When FSEL1,FSEL2, and MCOML are the low level.	17	AVDD1		5V for analog section
13	DEEM	I	De-emphasis control input	16	DVDD		5V for digital section
14	RSTN		System reset: L=Reset	15	DVSS		Ground for digital section

μPD78043GF-082 (Microprocessor)

No.	Symbol	I/O		Description
1	NC			Not used
2	NC			
3	5G	O	H	Digit output terminals for fluorescent indicator tube
4	4G			
5	3G			
6	2G			
7	1G			
8	Vdd	I		Power supply terminal (+5V)
9	CLK	O		Serial transfer clock output terminal of command to the signal processor IC.
10	DATA	O	H	Serial data of command of signal processing IC
11	XLT	O	↓	Command to signal processing IC
12	DMUT	O	H	Muting signal to signal processing IC
13	AMUT	O	H	Muting signal
14	SQCK	O	↑	Serial transfer clock of sub code Q to signal processing IC
15	NC			Not used
16	SQSO	I		Serial transfer data of sub code Q from signal processing IC
17	XRST	I	L	Reset signal
18	SENS	I	I	Sense signal from signal processing IC
19	RI.IN	I		Input terminal of control signal RI
20	GND	I		
21	RI.OUT	O		Output terminal of control signal RI
22	MD2	O	L	Inhibiting signal of digital output
23	DEFECT	O	H	Inhibiting signal of DEFECT circuit to servo comparator
24	AD4	I	6	A/D port for key input (Normal : 5V)
25	AD3		7	
26	AD2		8	
27	AD1		9	
28	AD0		10	
29	AVdd	I		Voltage supply terminal for analog
30	AVref	I		Reference voltage supply terminal for analog
31	DX-C311 Select	I		Model selection terminal
32	NC			Not used
33	Vss	I		
34	X1	I		System clock oscillation input
35	X2	O		System clock oscillation output
36	LSR	O	H	Laser control signal
37	ROT.STOP.SENS	I	H	Carousel stop position detection photo interrupter input
38	ROT.POS.SENS	I	↑	Carousel disc position detector photo interrupter input
39	ROT.HI	O	H	Carousel high speed rotation signal
40	ROT.R	O	L	Carousel rotation control signal
41	ROT.L	O	L	
42	CH.CLOSE	O	L	Chucking control signal

No.	Symbol	I/O		Description
43	CH.OPEN	O	L	
44	LD.CLOSE	O	L	Tray loading control signal
45	LD.OPEN	O	L	
46	SCOR	I	↓	Synchronizing signal detector of sub code sink
47	RMCN	I	L	Remote control signal input port
48	NC			Not used
49	FOK	I	H	Focus OK signal
50	LD.CLOSE.SW	I	L	Tray loading finishing switch input
51	LD.OPEN.SW	I	L	Tray opening finishing switch input
52	Vdd	I	L	
53	CH.CLOSE.SW	I	L	Chucking finishing switch input
54	CH.OPEN.SW	I	L	Chucking open finishing switch input
55	LD.CURRENT	I	L	Detective signal of overcurrent for loading motor
56	ROULETTE.BRAKE	I		Setting the carousel break (H=40msec,L=20msec)
57	NC			Not used
58	NC			
59	NC			
60	NC			
61	P16	O	H	Segment output for fluorescent indicator tube
62	P15			
63	P14			
64	P13			
65	P12			
66	P11			
67	P10			
68	P9			
69	P8			
70	Vfdp	I		Negative voltage for FL tube
71	P7	O	H	Segment output for fluorescent indicator tube
72	P6			
73	P5			
74	P4			
75	P3			
76	P2			
77	P1			
78	NC			Not used
79	NC			
80	NC			

H : Operation at the high level

L : Operation at the low lebel

6,7,8,9,10 : A/D converter input

↑ : Operation at leading pulse

↓ : Operation at trailing pulse

PACKING VIEW

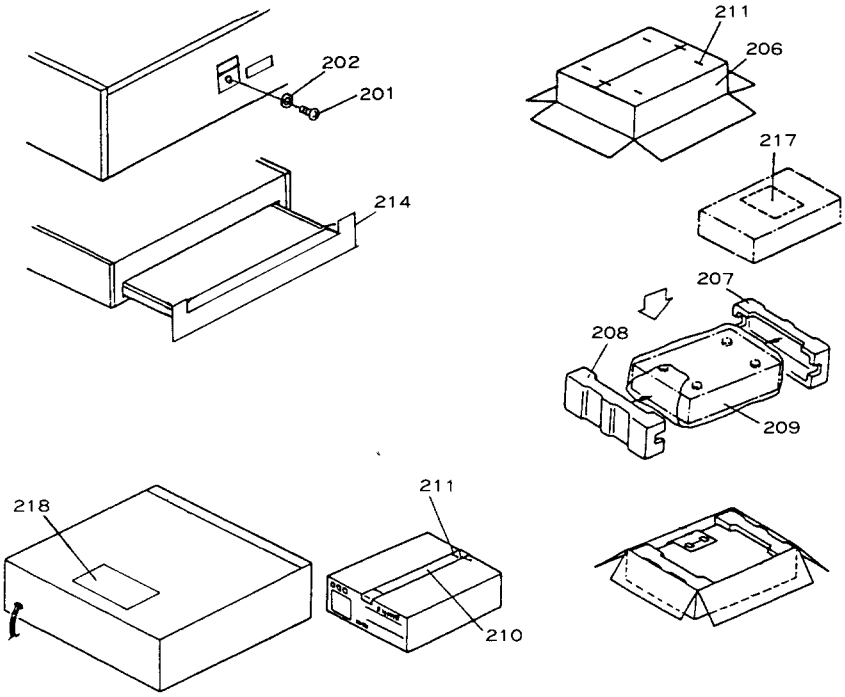

PARTS LIST

REF.NO.	PART NO.	DESCRIPTION
201	82115018	5P+18FN, Screw
202	27270357	t 0.5 x 15 x 5.2, Spacer
206	29052854Y	Master carton box <DX-C120>
	29058255Y	Master carton box <DX-C220>
	29052856Y	Master carton box <DX-C320>
207	29091658Y	Pad, L
208	29091659Y	Pad, R
209	29100141Y	700 x 600, Poly bag
210	29110071	Damplon tape
211	282301	Sealing hook
214	29095721Y	Sheet, Door
246	29360840Y	Label, sheet
217	29355207Y	Instruction sheet
218	29360687Y	Label, Class1 <P>
219	29361791Y	Label (UPC), <N>, DX-C120
	29361792Y	Label (UPC), <N>, DX-C220
	29361793Y	Label (UPC), <N>, DX-C320
	29360708Y	Label (UL), <N>

PART NO.	DESCRIPTION
Accessary bag ass'y	
2010098A	Connection cord
2010200	Remote control cord
24140289Y	RC-289C, Remote control unit, Except DX-C110
3010054	UM-3, Two batteries, Except DX-C120
29342095Y	Instruction manual, E
29342096Y	Instruction manual, <V>
29342097Y	Instruction manual, 6 Land <P>
29342098Y	Instruction manual, 3 Land <W>
29365019AY	Warranty card <N>
29365020L	Warranty card <V>
29358002KY	Service station list <N>
25055040	CV-K-2, Converstion plug <W>, DX-C220 Only
29100097-1	350 x 250,Styrene bag
29100094B	Styrene bag for warranty card <V>

<D>: 120V model only
<P>: 230V model only
<W>: Worldwide model only
<N>: U.S.A. model only
<V>: Germany model only
<C>: Canadian model only

MECHANISM-EXPLODED VIEW

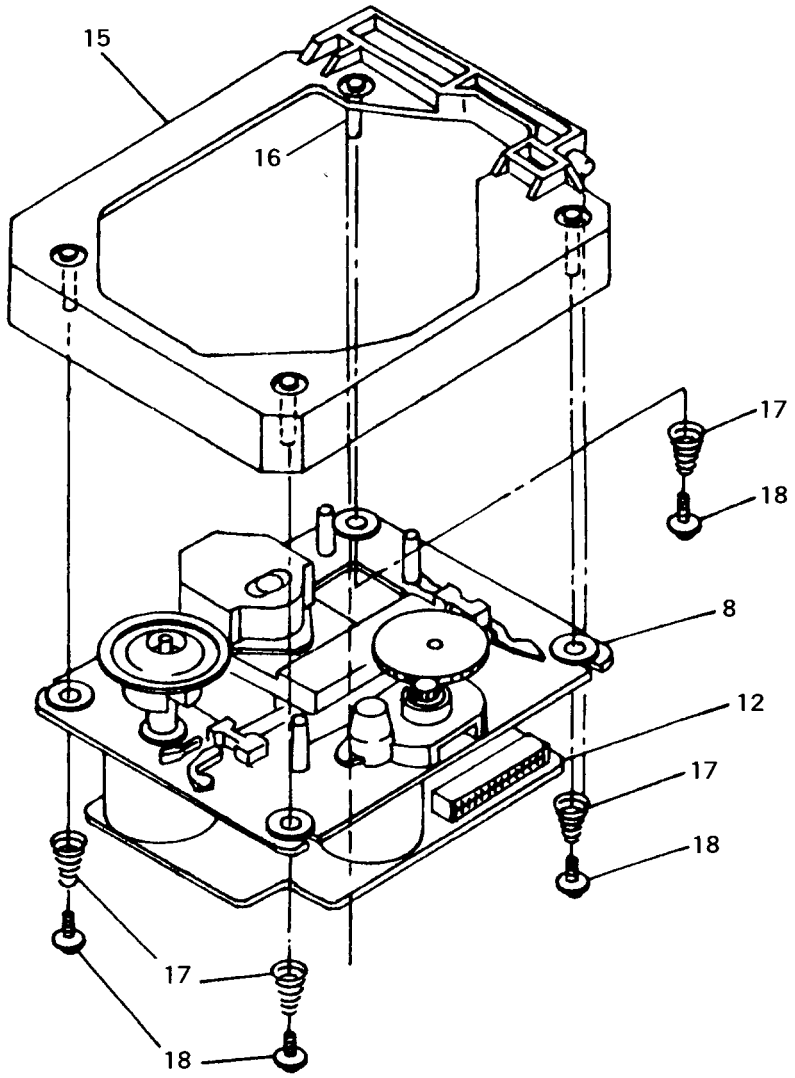

PARTS LIST

REF. NO.	PART NO.	DESCRIPTION
1	24828006	Sled shaft
2	24840068	2 x 5, Self-tapping screw
3	24822015A	Reinforcement plate
4	24820024	Spring
5	24824003	Centering
6	24110011	Pick-up
7	24810023	Wheel
8	24802014	Chassis ass´y
9	24804012	Sled motor ass´y
10	82112003	2P+3FN, Pan head screw
11	24840099	2 x 6, Self-tapping screw
12	24840075A	AR-AS-1A, RF/Servo pc board ass´y
13	24840074	Flexible cable
14	24818012	Insulator (FLT)
15	24802016	Chassis (SUB)
16	24828012	Shaft (FLT)
17	24820026	Spring (FLT)
18	24609072Y	Screw (FLT)

PICK-UP DRIVE UNIT KSK-1320A

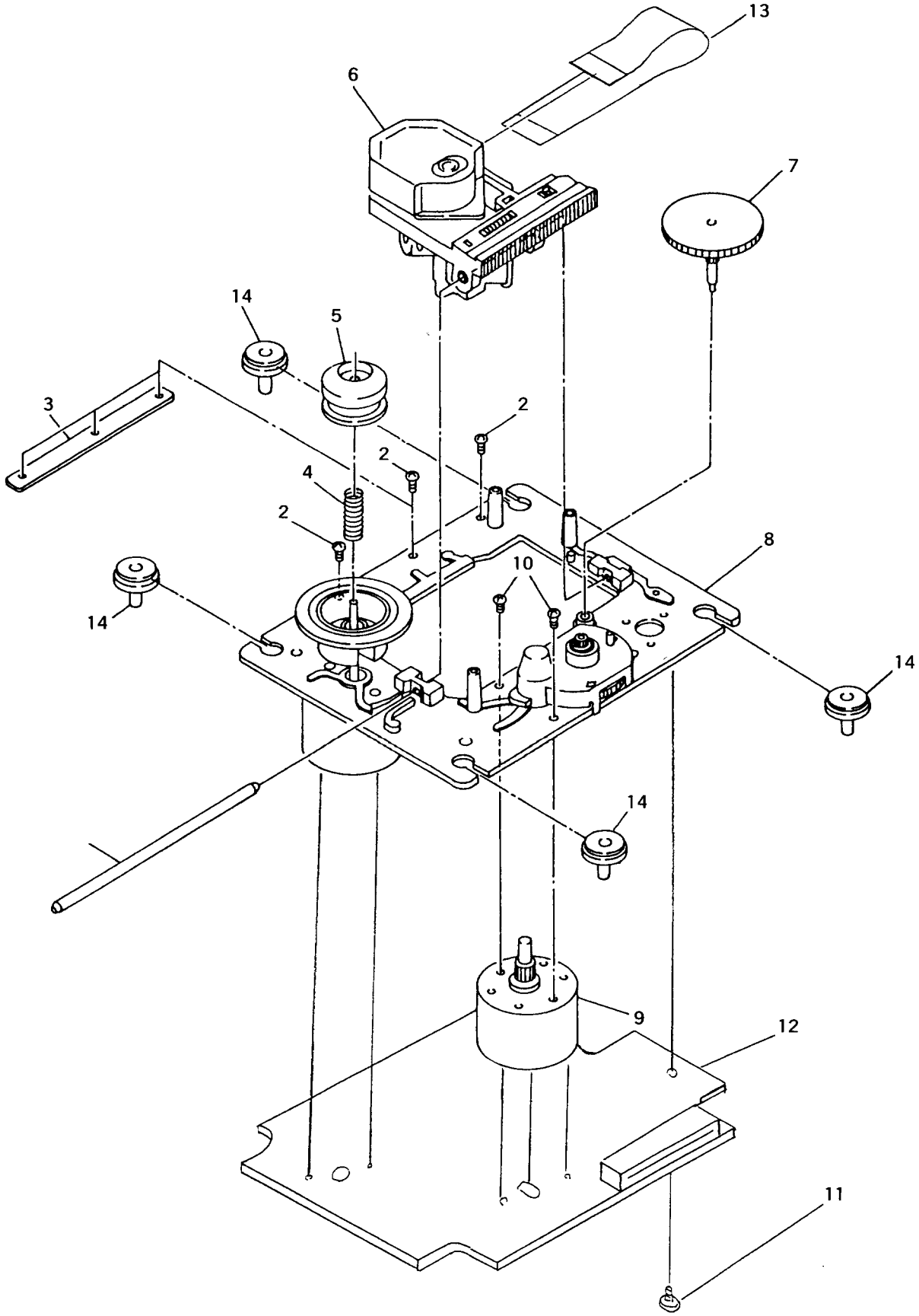

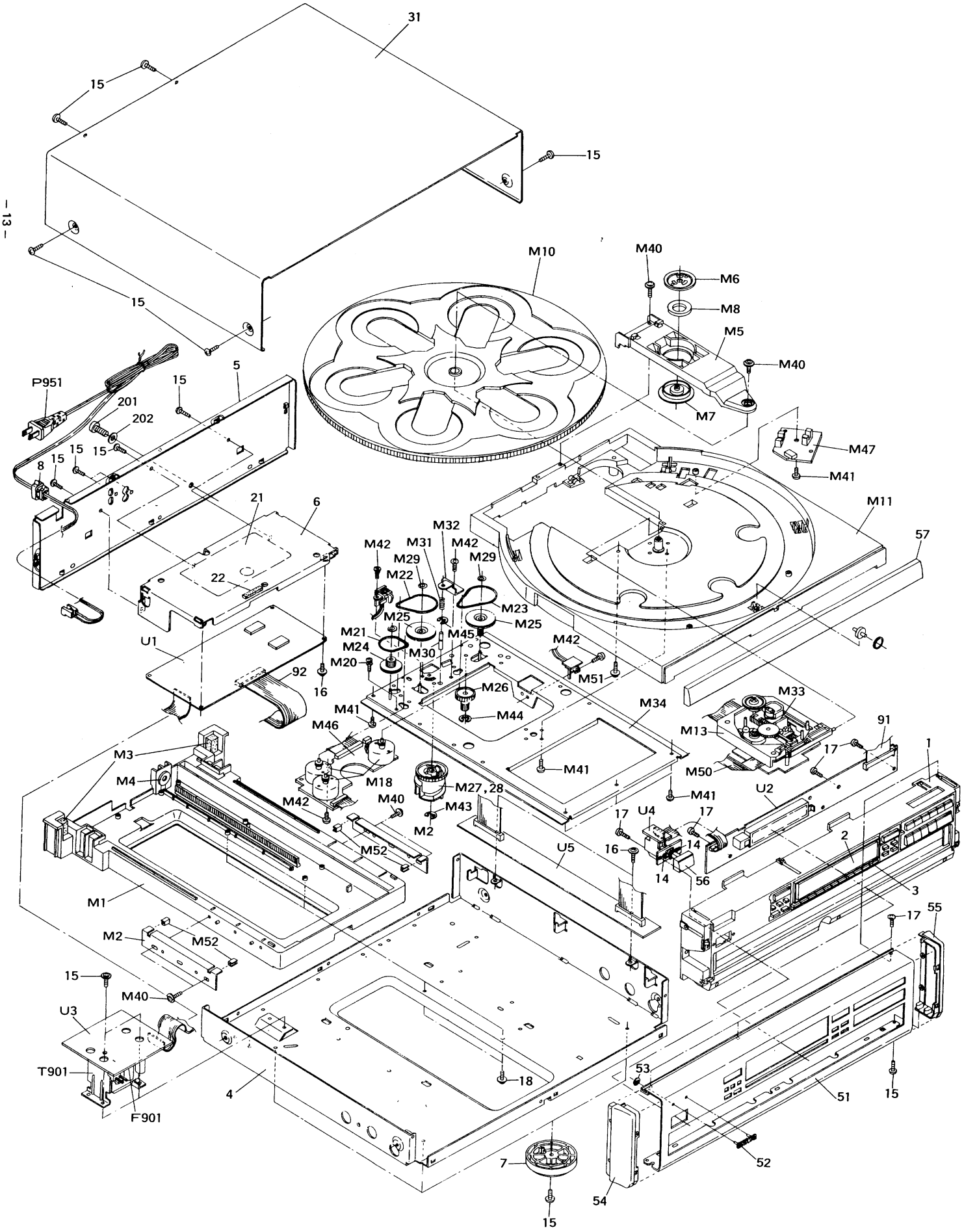
31
15
15
15
M10
M40
M6
M8
M5
M40
M7
M47
M41
M11
57
P951
201
202
15
5
15
15
8
15
21
6
22
U1
92
16
M42
M31
M32
M42
M29
M29
M22
M23
M25
M25
M21
M24
M45
M30
M20
M42
M51
M26
M44
M41
M46
M34
M33
M13
91
17
M50
1
M3
M4
M18
M27,28
M41
M41
U2
M42
M40
M43
M2
17
U4
17
14
16
14
56
2
3
M52
U5
M1
M2
M52
17
55
15
M40
U3
T901
F901
4
18
53
51
15
7
52
54
15

PARTS LIST

REF. NO.	PART NO.	DESCRIPTION
1	27110801Y	Front bracket
2	28191679AY	Clear plate
3	28324948Y	Knob, ten key
4	27100282Y	Chassis
5	27122040Y	Rear panel <DN>, DX-C120
	27122041Y	Rear panel <DN,DC>, DX-C220
	27121856Y	Rear panel <W>, DX-C220
	27122043Y	Rear panel <DN>, DX-C320
	27122044Y	Rear panel <P>, DX-C320
	27122105Y	Rear panel <PT>, DX-C320
6	27130731Y	Bracket (PC)
7	27175292Y	Leg ass'y
8	27300750	⚠ Cord bushing
14	82143006Y	3P+6FN(BC), Screw
15	838130088Y	3TTB+8B, Screw
16	831130088Y	3TTW+8B, Screw
17	833430080Y	3TTP+8P(BC), Screw
18	831430100Y	3TTW+10P(BC), SCREW
19	834430088Y	3TTS+8B(BC),SCREW
21	29361581Y	LABEL(ALL)
22	28141240Y	t 3 x 35 x 5, RGK-3102P-6, Cushion
23	29360117Y	LABEL (CSA),<DC>,DX-C220/C320
24	29360687Y	LABEL (CLASS1),<P>,DX-C320
25	29361786Y	LABEL ,<PT>,DX-C320
31	28184513AY	Top cover
51	27211691Y	Front panel <DN>, DX-C120
	27211692Y	Front panel <DN>, DX-C220
	27211693Y	Front panel <DN>, DX-C320
52	28135199Y	Badge
53	8910301	CS-ring
54	28125248-6Y	End cap L
55	28125249-6Y	End cap R
56	28324140Y	Knob, power
57	28148306Y	Door
91	2046341512Y	NCFC6-341512, ETC TO DIS & AR, Flat cable
92	2046312522Y	NCFC6-312522, MECH. TO AR, Flat cable
201	82115018	5P+18FN, Screw
202	27270357	t 0.5 x 15 x 5.2, Spacer
P951	253192HITY	⚠ AS-UC-6#18, Power supply cord <N>
	253193HITY	⚠ AS-CEE, 250V, 2.5A, Power supply cord <P>, DX-C220/C320
F901	252075Y	⚠ 2.5A-SE-EAK <P>, DX-C220/C320
T901	2300992Y	⚠ NPT-1200D, Power transformer
	2300993Y	⚠ NPT-1200P, Power transformer <P>, DX-C220/C320
	2300994Y	⚠ NPT-1200DG, Power transformer <W>, DX-C220
U1	1H241520-1Y	NAAR-4920-1, Main circuit pc board ass'y, DX-C120
	1H242520-2Y	NAAR-4920-2, Main circuit pc board ass'y, DX-C220
	1H243520-3Y	NAAR-4920-3, Main circuit pc board ass'y, DX-C320
U2	1H241521-1Y	NADIS-4921-1, Display circuit pc board ass'y, DX-C120
	1H242521-2Y	NADIS-4921-2, Display circuit pc board ass'y, DX-C220
	1H243521-3Y	NADIS-4921-3, Display circuit pc board ass'y, DX-C320
U3	1H241522-1Y	NAPS-4922-1, Power supply pc board ass'y <D,N>, DX-C120
	1H242522-2Y	NAPS-4922-2, Power supply pc board ass'y <D,N>, DX-C220
	1H243522-3Y	NAPS-4922-3, Power supply pc board ass'y <D,N>, DX-C320
	1H242522-2AY	NAPS-4922-2A, Power supply pc board ass'y <P>, DX-C220
	1H243522-3AY	NAPS-4922-3A, Power supply pc board ass'y <P>, DX-C320
	1H242522-2BY	NAPS-4922-2B, Power supply pc board ass'y <W>, DX-C220
U4	1H241523-1Y	NASW-4923-1, Power switch pc board ass'y, DX-C120
	1H242523-2Y	NASW-4923-2, Power switch pc board ass'y, DX-C220
	1H243523-3Y	NASW-4923-3, Power switch pc board ass'y, DX-C320
U5	1H241552-1Y	NAETC-4952-1, Main circuit pc board ass'y, DX-C120
	1H242552-2Y	NAETC-4952-2, Main circuit pc board ass'y, DX-C220
	1H243552-3Y	NAETC-4952-3, Main circuit pc board ass'y, DX-C320

CHANGER MECHANISM PARTS LIST (NCD-56S-C)

REF. NO.	PART NO.	DESCRIPTION
M1	24840095AY	RAIL
M2	24822016BY	BRACKET (GUIDE)
M3	24836006AY	CUSHION (TRAY)
M4	24836016Y	CUSHION (LOCK)
M5	24814001A	ARM
M6	27301475	YOKE (CH)
M7	27301474B	CAP (CH)
M8	28181019A	MAGNET (CH)
M9	24836007Y	CUSHION (A2)
M10	24840096Y	ROULETTE
M11	24840097Y	TRAY
M12	24840098Y	ROLLER
M18	24804015Y	MOTOR
M19	24810028Y	PULLEY
M20	24609071AY	SCREW
M21	24816009Y	RBR BELT (A)
M22	24816010AY	RBR BELT (B)
M23	24816011Y	RBR BELT (D)
M24	24810029Y	GEAR (A)
M25	24810030Y	GEAR (B)
M26	24810031Y	GEAR (D)
M27	24810026Y	CAM GEAR (A)
M28	24810027Y	CAM GEAR (B)
M29	24834014Y	WASHER
M30	24828007Y	SHAFT
M31	24820025Y	SPRING
M32	24822017Y	BRACKET (PH)
M33	24800011BY	CDP M
M34	24802017AY	CHASSIS AS
M35	24802015AY	CHASSIS

REF. NO.	PART NO.	DESCRIPTION
M36	24828008Y	SHAFT (A)
M37	24828009AY	SHAFT (B)
M38	24828010Y	SHAFT (C)
M39	24828011Y	SHAFT (D)
M40	831430100Y	3TTW + 10P (BC), SCREW
M41	833430080Y	3TTP + 8P (BC)SCREW
M42	82112606Y	2.6P + 6FN, SCREW
M43	8930401SY	RING (E)
M44	8930201SY	RING (E)
M45	8930301SY	RING (E)
M46	1H242542-1Y	ETC-AS
M47	1H242543-1Y	ETC-AS
M48	1H242544-1Y	SW-AS
M49	1H242545-1Y	SW-AS
M50	2046220822Y	FLAT CABLE
M51	24609073Y	SCREW
M52	24834015	EDGING
M53	260208Y	WIRE TIE
M54	24836017Y	CUSHION (OP)

NOTE: <D>:120V model only
<P>:230V model only
<W>:Worldwide model only
<Q>:240V model only

NOTE: THE COMPONENTS IDENTIFIED BY MARK ⚠ ARE CRITICAL FOR RISK OF FIRE AND ELECTRIC SHOCK. REPLACE ONLY WITH PART NUMBER SPECIFIED.

DX-C120/DX-C220/DX-C320

OCK DIAGRAM

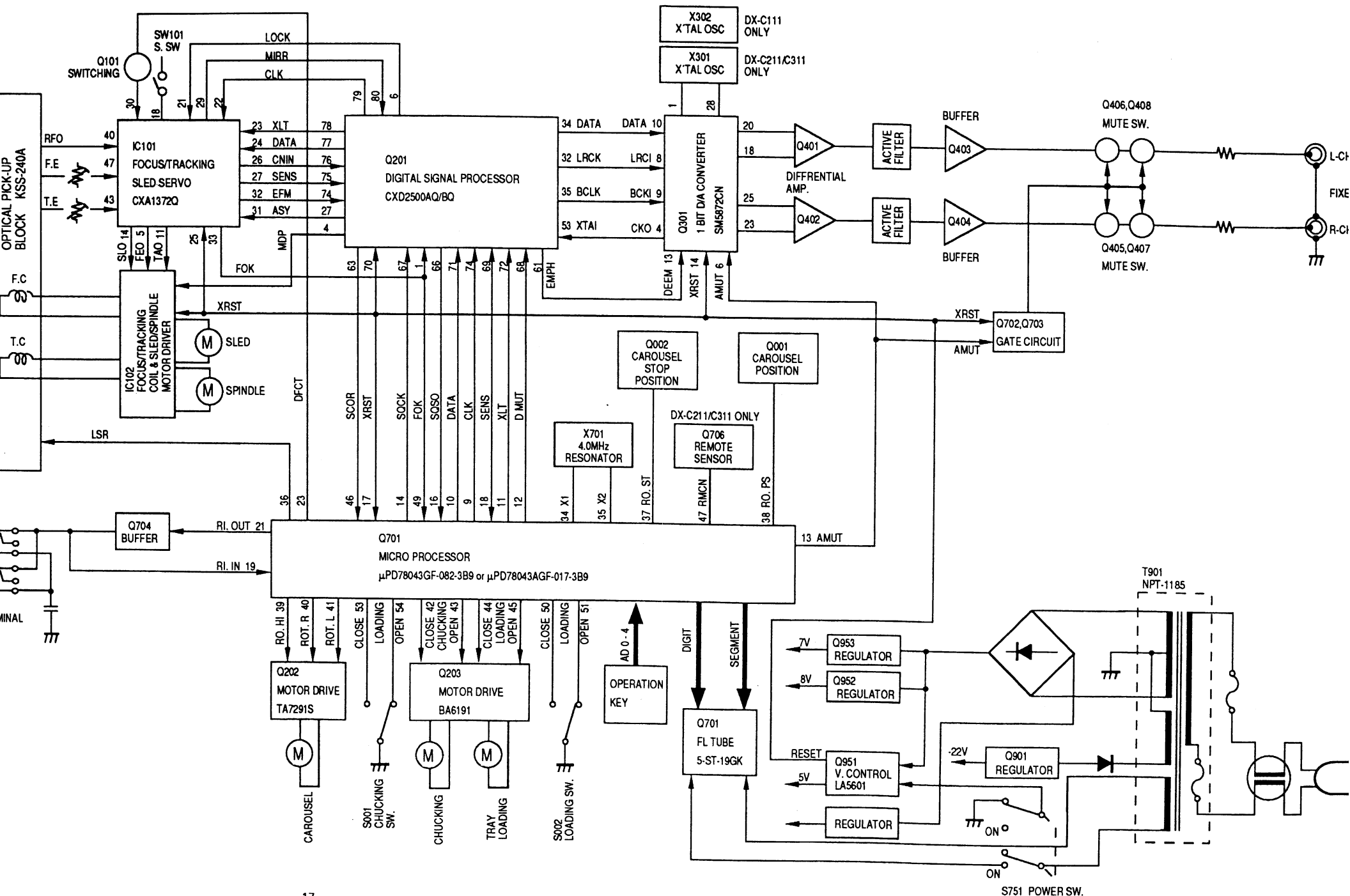

DJUSTMENT PROCEDURES

not necessary to perform the adjustment of optical pickup.
s confirmation should be made when replacing the optical pickup.
Connect the oscilloscope to test points RF and VC.

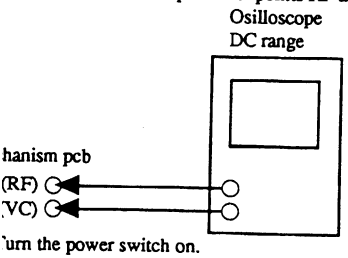

urn the power switch on.
oad the test disc YEDS-18 on the tray and press the play button.
Confirm that the waveform on the oscilloscope is optimum eye attern and optimum level as shown photo 1.
ptimum eye pattern means that shape "◇" can be clearly stinguished at the center of the waveform.

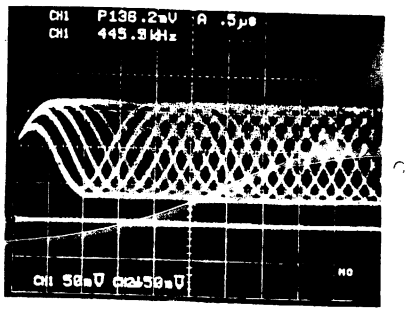

REFERENCE

Focus/Tracking Gain Adjustment

A frequency response analyzer is necessary in order to perform this adjustment exactly.

However, this gain has a margin, so even if it is slightly off, there is no problem. Therefore, do not perform this adjustment.

Focus/tracking gain determines the pick-up follow-up (vertical and horizontal) relative to mechanical noise and mechanical shock when the 2-axis device operate.

However, as these reciprocate, the adjustment is at the point where both are satisfied.

- When gain is raised, the noise when the 2-axis device operates increases.
- When gain is lowered, it is more susceptible to mechanical shock and skipping occurs more easily.
- When gain adjustment is off, the symptoms below appear.

Symptoms \ Gain	Focus	Tracking
• The time until music starts becomes longer for STOP →▷PLAY or automatic selection (⏮ ⏭ buttons pressed. (Normally takes about 2 seconds.)	low	low or high
• Music does not start and disc continues to rotate for STOP→▷PLAY or automatic selection (⏮ ⏭ buttons pressed.)	–	low
• Disc table opens shortly after STOP→▷PLAY.	low or high	–
• Sound is interrupted during PLAY. Or time counter display stops progressing.	–	low
• More poise during 2-axis device operation.	high	high

The following is a simple adjustment method.

– Simple Adjustment –

Note: Since exact adjustment cannot be performed, remember the positions of the controls before performing the adjustment. If the positions after the simple adjustment are only a little different, return the controls to the original position.

Procedure:

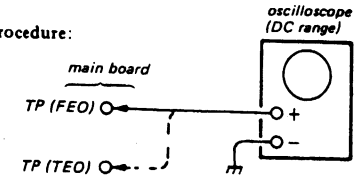

1. Keep the set horizontal.
   (If the set is not horizontal, this adjustment cannot be performed due to the gravity against the 2 axis device.)
2. Insert disc (YEDS-18) and press ▷PLAY button.
3. Connect oscilloscope to RF/Servo board TP (FE).
4. Adjust RV102 so that the waveform is as shown in the figure below. (focus gain adjustment)

- Incorrent Examples (DC level changes more than on adjusted waveform)

low focus gain

high focus gain

5. Connect oscilloscope to RF/Servo board TP (TE).
6. Adjust RV101 so that the waveform is as shown in the figure below. (tracking gain adjustment)

- Incorrect Examples (fundamental wave appears)

low tracking gain

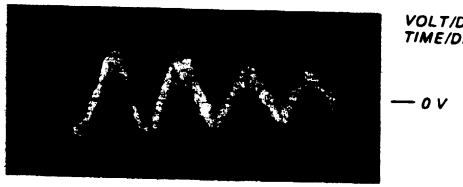

high tracking gain
(higher fundamental wave than for low gain)

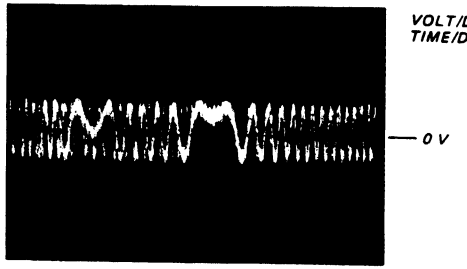

Adjustment Location: RF/Servo board

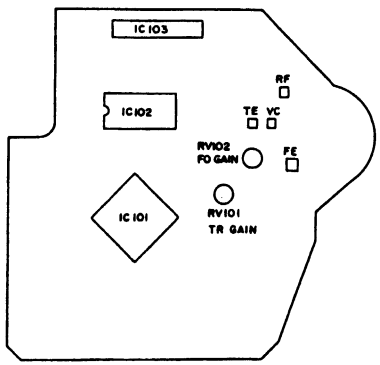

SCHEMATIC DIAGRAM

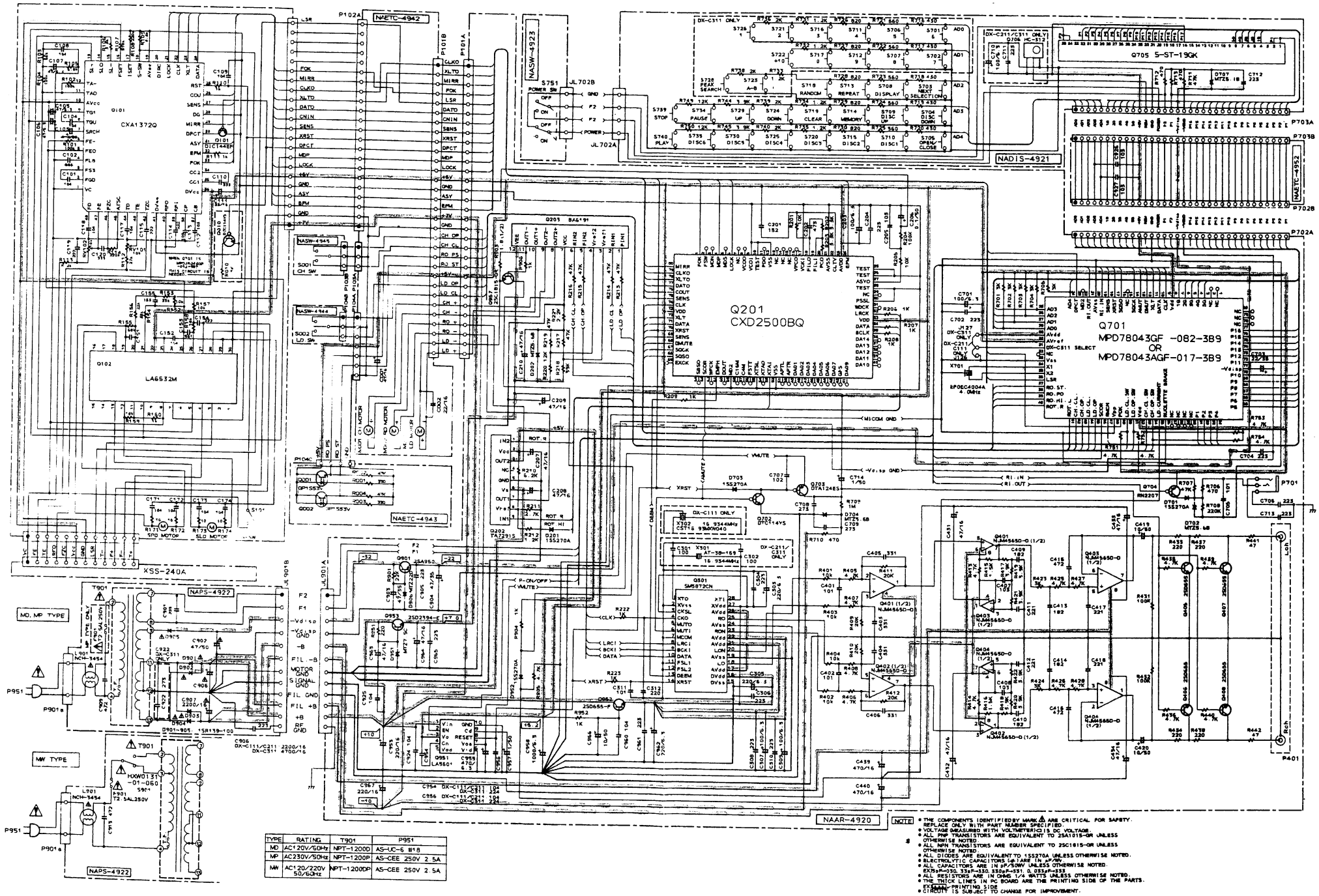

PRINTED CIRCUIT BOARD — PARTS LIST

Main circuit pc board (NAAR-4920)

CIRCUIT NO.	PART NO.	DESCRIPTION
	ICs	
Q201	22240487 or	CXD2500AQ or
	22240487A	CXD2500BQ
Q202	22240239	TA7291S
Q203	22240771	BA6191
Q301	22240726	SM5872CN
Q401	22240191	NJM4565D-D
Q402	22240191	NJM4565D-D
Q403	22240191	NJM4565D-D
Q404	22240191	NJM4565D-D
Q701	22240812	µPD78043AGF-017-3B9
Q951	22240534	LA5601
	Transistors	
Q405-Q408	2211706 or	2SD655-F or
	2211705	2SD655-E
Q702	221281	DTC114YS
Q703, Q704	2212600	DTA124ES
Q901	2211503 or	2SA950-O or
	2211504	2SA950-Y
Q952	2211706 or	2SD655-F or
	2211705	2SD655-E
Q953	2202706 or	2SD2394-F or
	2202115	2SD2061-E
Q957	2211255	2SC1815-GR
	Diodes	
D201	223205 or	1SS270A or
	223163	1SS133
D202	224450562	MTZ5.6B, Zener
D701	223205 or	1SS270A or
	223163	1SS133
D702	224450562	MTZ5.6B, Zener
D703	223205 or	1SS270A or
	223163	1SS133
D704	224450562	MTZ5.6B, Zener
D906	224452204	MTZ22D, Zener
D951	224450753	MTZ7.5C, Zener
D952	223205 or	1SS270A or
	223163	1SS133
	Crystals	
X301	3010159	AT-38-169, Crystal, DX-C211/C311
X302	3010230	CST16.93MXW040, Cera lock, DX-C111
X701	3010229	EFOEC4004A4, Cera lock
	Capacitors	
C201	374721524	1500pF±5%, 50V, Plastic
C202	374724734	0.047µF±5%, 50V, Plastic

CIRCUIT NO.	PART NO.	DESCRIPTION
C203	354721019	100µF, 6.3V, Elect.
C205	374721034	0.01µF±5%, 50V, Plastic
C206	354781099	0.1µF, 50V, Elect.
C207-C210	354744709	47µF,16V, Elect.
C303, C305,	354722219	220µF, 6.3V, Elect.
C307		
C308	374721044	0.01µF±5%, 50V, Plastic
C309	354722219	220µF, 6.3V, Elect.
C310, C407,	374721044	0.01µF±5%, 50V, Plastic
C408		
C409, C410,	374721824	1800pF±5%, 50V, Plastic
C413, C414		
C415, C416	374724724	4700pF±5%, 50V, Plastic
C419	354781009	10µF, 50V, Elect.
C420	354781009	50V, 10µF, Elect.
C431-C434	354744709	47µF, 16V, Elect.
C439, C440	354744719	470µF, 16V, Elect.
C701	354721019	100µF, 6.3V, Elect.
C703	354762209	22µF, 35V, Elect.
C707	374721024	1000pF±5%, 50V, Plastic
C708, C709	374722734	0.027µF±5%, 50V, Plastic
C714	354780109	1µF, 50V, Elect.
C903, C904	354764709	47µF, 35V, Elect.
C924, C925	374721044	0.01µF±5%, 50V, Plastic
C953	354742219	220µF, 16V, Elect.
C954	374721044	0.01µF±5%, 50V, Plastic
	374722244	0.22µF±5%, 50V, Plastic
C955	354724719	470µF, 6.3V, Elect.
C956	374721044	0.01µF±5%, 50V, Plastic
	374722244	0.22µF±5%, 50V, Plastic
C957	354780109	1µF, 50V, Elect.
C958	354721029	1000µF, 6.3V, Elect.
C960	374721044	0.01µF±5%, 50V, Plastic
C961	374722734	0.027µF±5%, 50V, Plastic
C962	354722219	220µF, 6.3V, Elect.
C963, C964	354744709	47µF, 16V, Elect.
C966	354781009	10µF, 50V, Elect.
C967	354742219	220µF, 16V, Elect.
	Resistors	
R903	452530184F	1.8ohms, 1/2W, Metal oxide
	Sockets	
P101A	25050895	NSCT-31P690, Socket
P702A	25051227	NSCT-34P1017, Socket
	Terminals	
P401	25045408	NPJ-2PDBL233, Line out
P701	25045330	NPJ-2PDBL184, RI

Display circuit pc board (NADIS-4921)

CIRCUIT NO.	PART NO.	DESCRIPTION
Q705	212132	5-ST-19GK, FL TUBE
Q706	24130010	HC-312, Remote sensor, DX-C211/C311
	Diode	
D707	224450512	MTZ5.1B, Zener
	Capacitor	
C710	355721019	100µF, 6.3V, Elect., DX-C211/C311
	Switches, Terminals, Sockets	
S701,S702	25035652	NPS-111-S604, Push SW., DX-C311
S703-S705	25035652	NPS-111-S604, Push SW.
S706,S707	25035652	NPS-111-S604, Push SW., DX-C311
S708-S710	25035652	NPS-111-S604, Push SW.
S711,S712	25035652	NPS-111-S604, Push SW., DX-C311
S713-S715	25035652	NPS-111-S604, Push SW.
S716,S717	25035652	NPS-111-S604, Push SW., DX-C311
S718-S720	25035652	NPS-111-S604, Push SW.
S721-S723	25035652	NPS-111-S604, Push SW., DX-C311
S724-S725	25035652	NPS-111-S604, Push SW.
S726,S728	25035652	NPS-111-S604, Push SW., DX-C311
S729, S730, S734, S735, S739, S740	25035652	NPS-111-S604, Push SW.
	Socket	
P703A	25051227	NSCT-34P1017, Socket

Power supply pc board (NAPS-4922)

CIRCUIT NO.	PART NO.	DESCRIPTION
	Diode	
D901-D905	22380032	1SR139-100
	Coil	
L901	231222	NCH-3454
	Capacitors	
C902	354784709	47µF, 50V, Elect.
C906	393142227	2200µF, 16V, Elect., DX-C111/C211
	393344727	4700µF, 16V, Elect., DX-C311
C907	393142227	2200µF, 16V, Elect.
C909	3500077	DE7150F, 472M, IS
C922	374722734	0.027µF, 50V, Plastic, DX-C311
	Plug	
⚠ P901A	25055676	NPLG-2P632, FOR AC CORD
	Others	
	25050065Y	YSH403T, Fuse holder, <P,W>, DX-C211/C311
⚠ S901	25065437Y	NSS-22157P, Slide SW., <W>, DX-C211/C311

Power switch pc board (NASW-4923)

CIRCUIT NO.	PART NO.	DESCRIPTION
⚠ S751	25035481	NPS-122-L443, Push SW.

RF/SERVO pc board

CIRCUIT NO.	PART NO.	DESCRIPTION
IC101	22240394	CXA1372Q, IC
IC102	22240551	LA6532M, IC
Q101	2214290	DTC144EF, Transistor
S101	25065446	NLF/11022, Leaf SW.

NOTE: THE COMPONENTS IDENTIFIED BY MARK ⚠ ARE CRITICAL FOR RISK OF FIRE AND ELECTRIC SHOCK. REPLACE ONLY WITH PART NUMBER SPECIFIED.