Ref. No. 4015
072007

ONKYO SERVICE MANUAL

MULTI-PLATFORM TUNER
MODEL T-4555(B)/(S)

(North American model)

RC-671T

Black and Silver models

BMDC	120V AC, 60Hz
SMDC	120V AC, 60Hz

SAFETY-RELATED COMPONENT WARNING!!

COMPONENTS IDENTIFIED BY MARK ⚠ ON THE SCHEMATIC DIAGRAM AND IN THE PARTS LIST ARE CRITICAL FOR RISK OF FIRE AND ELECTRIC SHOCK. REPLACE THESE COMPONENTS WITH ONKYO PARTS WHOSE PART NUMBERS APPEAR AS SHOWN IN THIS MANUAL.

MAKE LEAKAGE-CURRENT OR RESISTANCE MEASUREMENTS TO DETERMINE THAT EXPOSED PARTS ARE ACCEPTABLY INSULATED FROM THE SUPPLY CIRCUIT BEFORE RETURNING THE APPLIANCE TO THE CUSTOMER.

ONKYO®
IMAGINATIVE SIGHT & SOUND

SERVICE PROCEDURE

1. Replacing the fuse

This symbol located near the fuse indicates that the fuse used is show operating type, For continued protection against fire hazard, replace with same type fuse , For fuse rating, refer to the marking adjacent to the symbol.

Ce symbole indique que le fusible utilise est e lent. Pour une protection permanente, n'utiliser que des fusibles de meme type. Ce demier est indique la qu le present symbol est apposre.

REF. NO.	PART NAME	DESCRIPTION	PART NO. (SN)	REMARKS
F901	FUSE	1.25A-UL/T-233	252318GR	⚠P<MDD>
F901 or	FUSE	1.25A-T/UL-ST2	252251GR	⚠P<MDD>

2. Initialize the unit

(1) Connect the AC power cord into a wall outlet.
(2) Press the STANDBY/ON button to turn on the unit.
(3) Press and hold down the MEMORY button, then press the STANDBY/ON button.

FL display

Clear

---> STANDBY

(4) Disconnect the AC power cord from a wall outlet.

3. Check the version of microprocessor

(1) Connect the AC power cord into a wall outlet.
(2) Press the STANDBY/ON button to turn on the unit.
(3) Press and hold down the DISPLAY button, then press the STANDBY/ON button.

FL display

version

V.1.02/06823A-3

3 seconds

(4) Press the STANDBY/ON button to turn off the unit.
(5) Disconnect the AC power cord from a wall outlet.

4. Tuner board

North American model <MDC>
Comes with C-HDSAT tuner board installed.

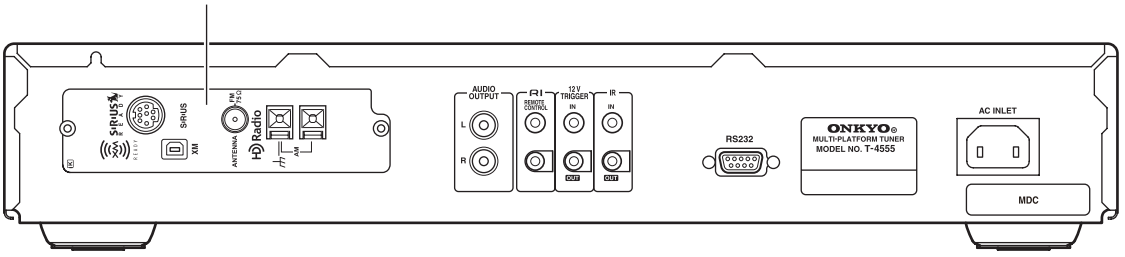

EXPLODED VIEWS-1

OVERALL

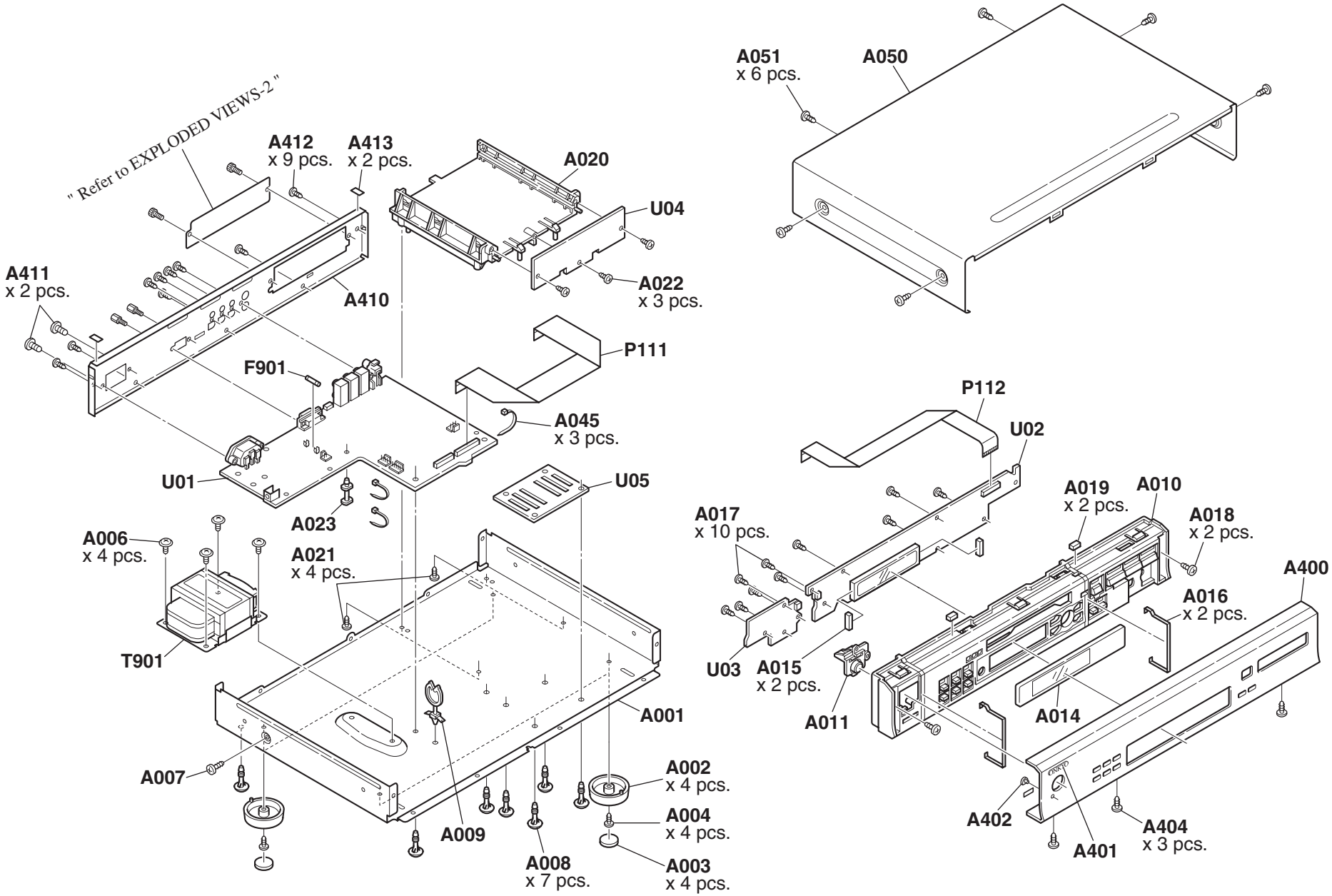

EXPLODED VIEWS-2

TUNER PC BOARD

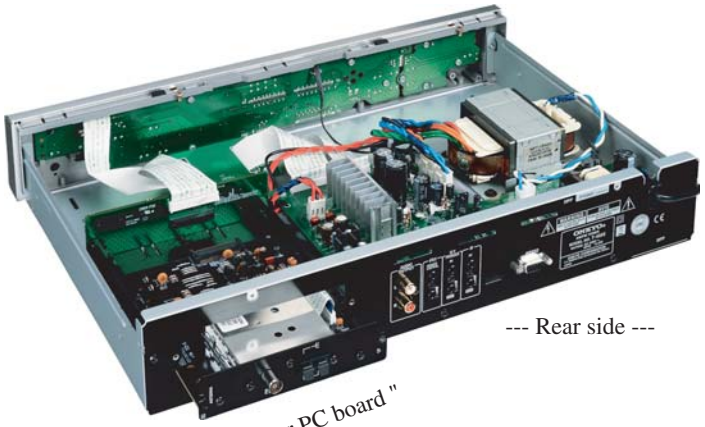

" Tuner PC board "

--- Rear side ---

C-HDSAT

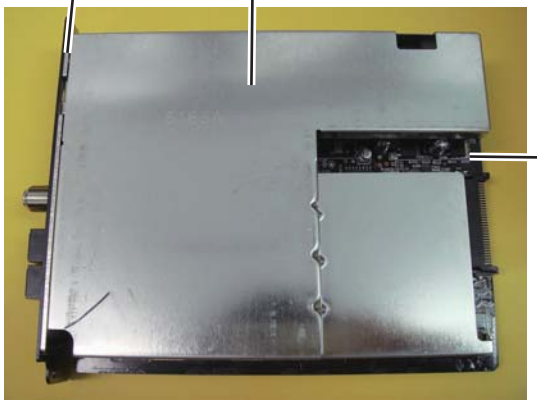

--- Top ---

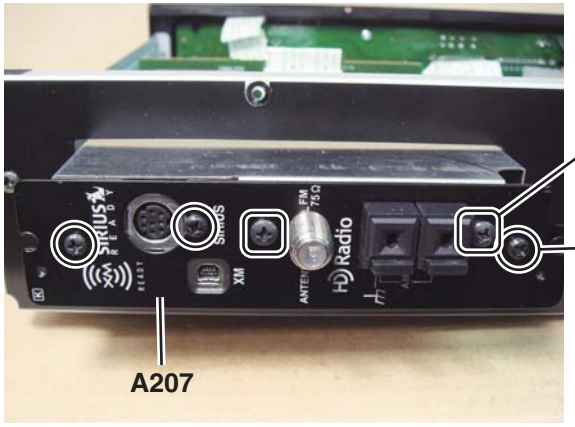

--- Rear ---

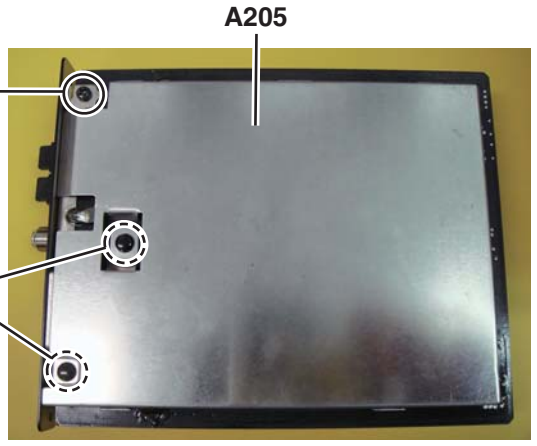

--- Bottom ---

--- Front ---

SCHEMATIC DIAGRAM

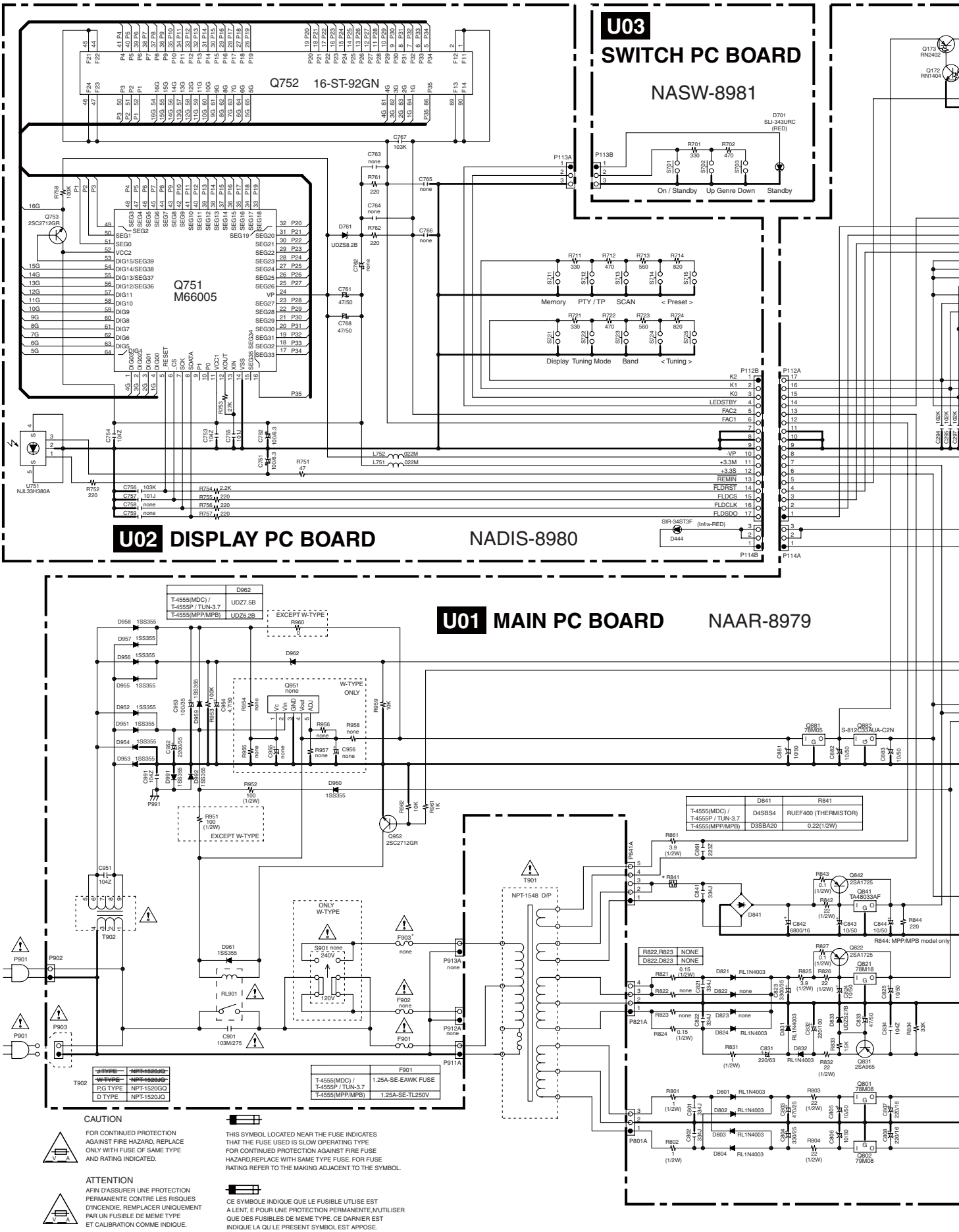

E F G H

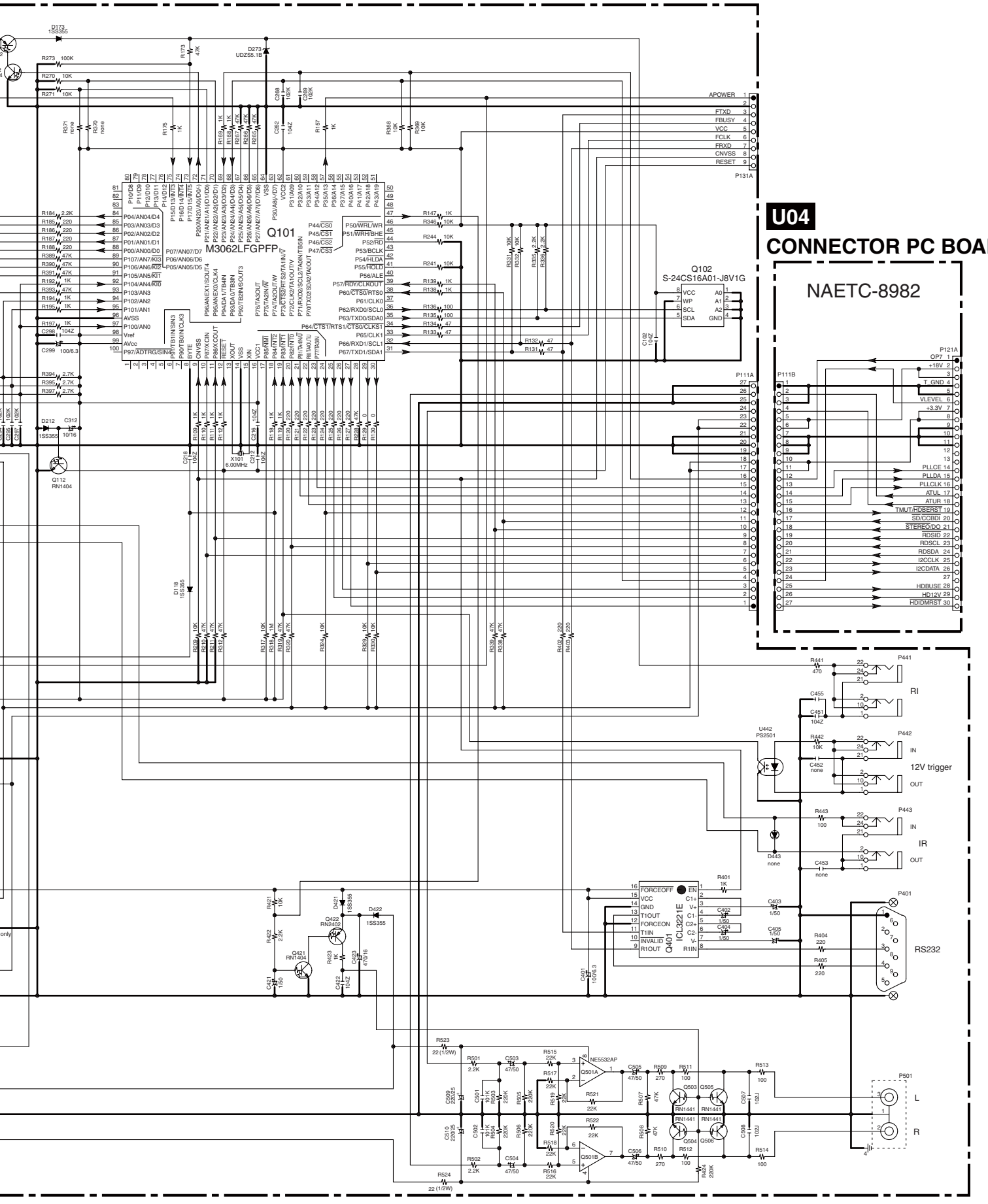
U04
CONNECTOR PC BOARD
NAETC-8982
Q101
M3062LFGPFP
Q102
S-24CS16A01-J8V1G
Q112
RN1404
X101
6.00MHz
U442
PS2501
Q401
ICL3221E
RI
12V trigger
IR
RS232
L
R

SCHEMATIC DIAGRAM

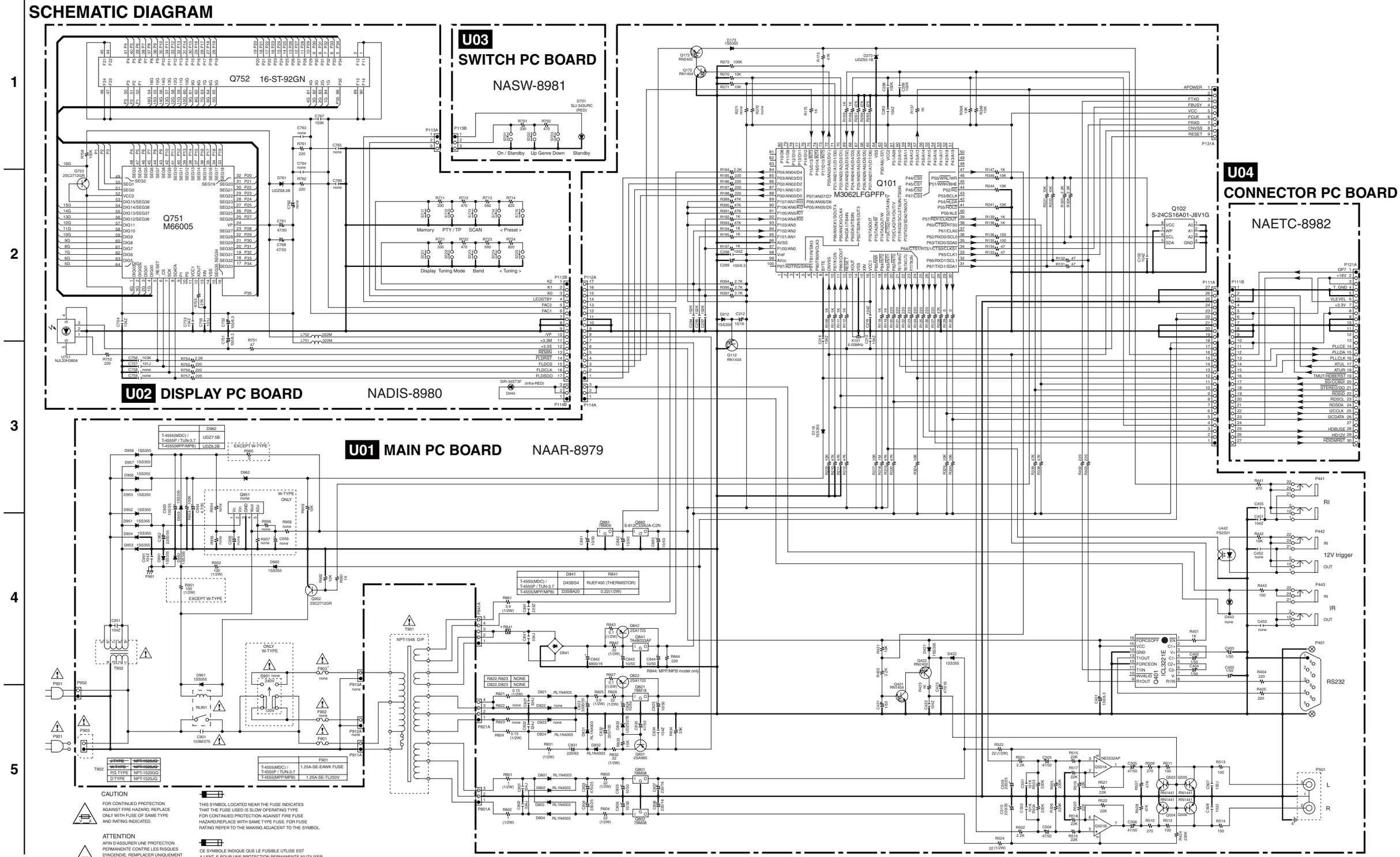

	D962
T-4555(MDC) / T-4555P / TUN-3.7	UDZ7.5B
T-4555(MPP/MPB)	UDZ6.2B

	D841	R841
T-4555(MDC) / T-4555P / TUN-3.7	D4SBS4	RUEF400 (THERMISTOR)
T-4555(MPP/MPB)	D3SBA20	0.22(1/2W)

	F901
T-4555(MDC) / T-4555P / TUN-3.7	1.25A-SE-EAWK FUSE
T-4555(MPP/MPB)	1.25A-SE-TL250V

~~J TYPE~~	~~NPT-1520JQ~~
~~W TYPE~~	~~NPT-1520JQ~~
P.G TYPE	NPT-1520GQ
D TYPE	NPT-1520JQ

CAUTION

FOR CONTINUED PROTECTION AGAINST FIRE HAZARD, REPLACE ONLY WITH FUSE OF SAME TYPE AND RATING INDICATED.

THIS SYMBOL LOCATED NEAR THE FUSE INDICATES THAT THE FUSE USED IS SLOW OPERATING TYPE FOR CONTINUED PROTECTION AGAINST FIRE FUSE HAZARD,REPLACE WITH SAME TYPE FUSE. FOR FUSE RATING REFER TO THE MAKING ADJACENT TO THE SYMBOL.

ATTENTION

AFIN D'ASSURER UNE PROTECTION PERMANENTE CONTRE LES RISQUES D'INCENDIE, REMPLACER UNIQUEMENT PAR UN FUSIBLE DE MEME TYPE ET CALIBRATION COMME INDIQUE.

CE SYMBOLE INDIQUE QUE LE FUSIBLE UTLISE EST A LENT, E POUR UNE PROTECTION PERMANENTE,N'UTILISER QUE DES FUSIBLES DE MEME TYPE. CE DARNIER EST INDIQUE LA QU LE PRESENT SYMBOL EST APPOSE.

PACKING PROCEDURE

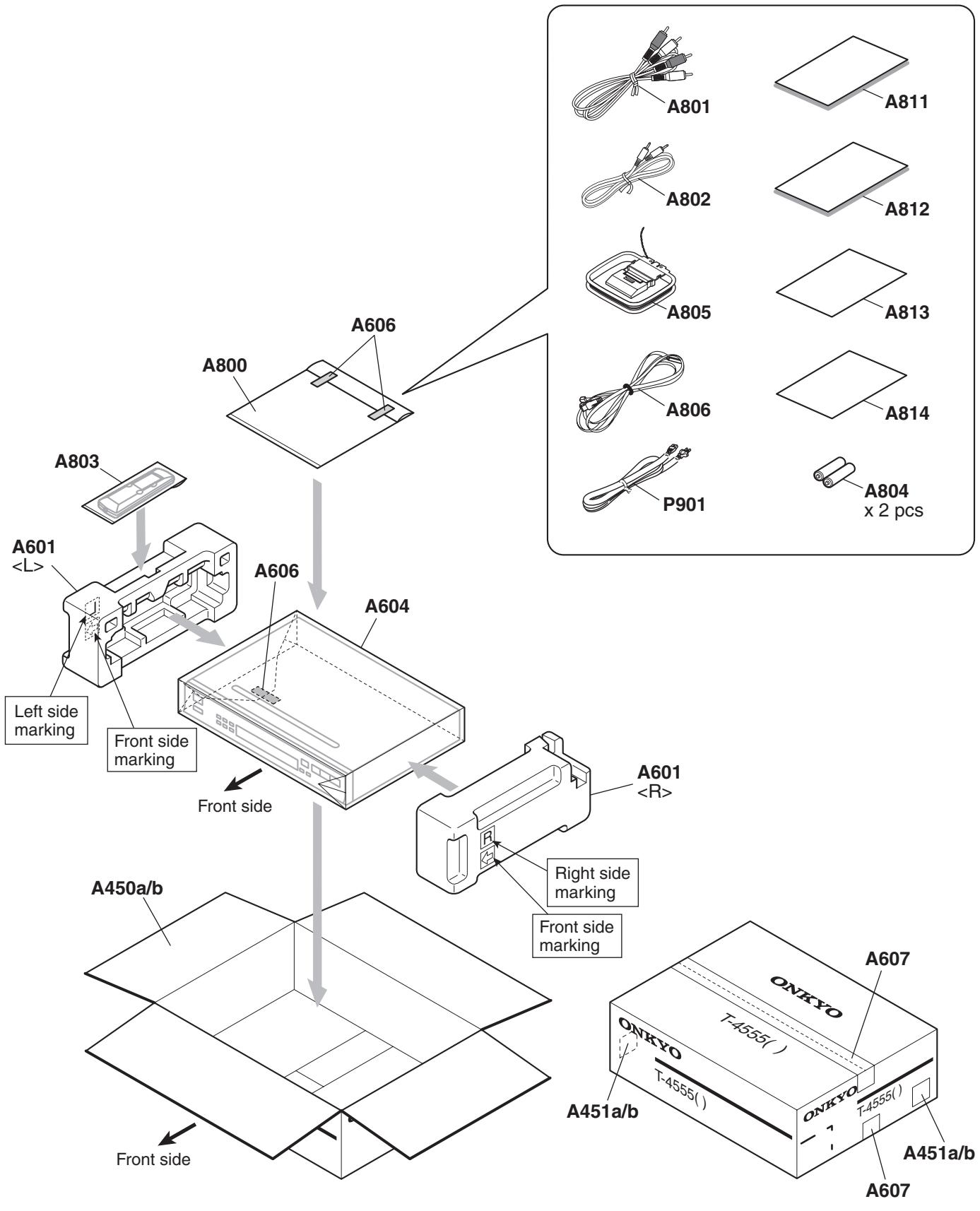

T-4555<MDC>

<Note>

Parts marked by '**NSP**" are generally unavailable because they are not in our Master Spare Parts List.

NOTE : THE COMPONENTS IDENTIFIED BY THE MARK ! ARE CRITICAL FOR RISK OF FIRE AND ELECTRIC SHOCK. REPLACE ONLY WITH PART NUMBER SPECIFIED.

<Notes>

(B) : Black model only

(S) : Silver model only

EXPLODED VIEW PARTS LIST

	REF. NO.	PART NAME	DESCRIPTION	Q'TY	PART NO. (SN)	REMARKS
EXPLODED	A001	CHASSIS	---	1	27100485A	
EXPLODED	A002	BOTTOM LEG	DV-SP504	4	27175433	
EXPLODED	A003	CUSHION	---	4	28141664	
EXPLODED	A004	SCREW	3TTB+8B(3CM)SR	4	801637	
EXPLODED	A005	TAPE	TAPE(CLOTH-16U)	1	29110083	
EXPLODED	A006	SCREW	4TTC+8C(3BC)	4	830440089GR	
EXPLODED	A007	SCREW	3P+10FN(3BC)	1	82143010GR	
EXPLODED	A008	HOLDER	KGLS-14RT	7	27190524	
EXPLODED	A009	CLAMP	HL-18-0	1	27301394	
EXPLODED	A010	F BRACKET	(B)	1	27111318B	(B)
EXPLODED	A010	F BRACKET	503E(S)	1	27111413A	(S)
EXPLODED	A011	GUIDE	(AS)	1	27268191	(B)
EXPLODED	A011	GUIDE	(AS)	1	27268192A	(S)
EXPLODED	A014	CLEAR PLT	---	1	28192112	(B)
EXPLODED	A014	CLEAR PLT	---	1	28192113	(S)
EXPLODED	A015	IB CUSHION	W15 x 3t TAPE	2	28141585	
EXPLODED	A016	TAPE	---	2	29110161	
EXPLODED	A017	SCREW	3TTB+8B(3CM)SR	10	801637	
EXPLODED	A018	SCREW	3TTB+8B(3CM)SR	2	801637	
EXPLODED	A019	CUSHION	---	2	28141606	

EXPLODED	A020	BRACKET	(RAIL)	1	27131011	
EXPLODED	A021	SCREW	3TTB+8B(3BC)	4	838430088GR	
EXPLODED	A022	SCREW	3TTB+8B(3CM)SR	3	801637	
EXPLODED	A023	HOLDER	MPS-14-0	1	27191285	
EXPLODED	A045	WIRE TIE	BSK-1	3	260208	
EXPLODED	A050	COVER	(B)	1	28184864	(B)
EXPLODED	A050	COVER	503(S)	1	28184934	(S)
EXPLODED	A051	SCREW	3TTB+8B(3BC)	6	838430088GR	(B)
EXPLODED	A051	SCREW	3TTB+8B(3CM)SR	6	801637	(S)
EXPLODED	A200	SCREW	3TTB+8B(3BC)	2	838430088GR	
EXPLODED	A201	SCREW	3P+6FN(3BC)	5	82143006GR	
EXPLODED	A202	RETAINER	(HDSAT)	1	27142037	
EXPLODED	A203	RIVET	P-RIVET NRP-345	2	880009	
EXPLODED	A204	SHLD CASE	SHLD CASE(A)	1	27225165A	
EXPLODED	A205	SHLD CASE	SHLD CASE(B)	1	27225166A	
EXPLODED	A207	PLATE	(SLOT-K7)	1	27262765	
EXPLODED	A208	SCREW	(PLATE)	2	801620A	

EXPLODED	A400	F PANEL	T4555BMDC	1	27213037	N (B)
EXPLODED	A400	F PANEL	T4555SMDC	1	27213038	N (S)
EXPLODED	A401	BADGE	BADGE	1	28135244	(B)
EXPLODED	A401	BADGE	BADGE	1	28135298	(S)
EXPLODED	A402	FACET	(S)	1	28198906	
EXPLODED	A404	SCREW	3TTB+8B(3BC)	3	838430088GR	
EXPLODED	A410	REAR PANEL	T4555MDC	1	27123750	N
EXPLODED	A411	SCREW	4TTB+8C(3BC)	2	838440089GR	
EXPLODED	A412	SCREW	3TTB+8B(3BC)	9	838430088GR	
EXPLODED	A413	TAPE	TAPE(CLOTH-8U)	(2)	29110082	
EXPLODED	A414	SPACER	t0.5 x D6.5 x D3.5	1	27270484	
EXPLODED	F901	FUSE	1.25A-UL/T-233	1	252318GR	!
EXPLODED	F901 or	FUSE	1.25A-T/UL-ST2	(1)	252251GR	!
EXPLODED	P111	FFC	NCFC7-273012	1	2047273012	
EXPLODED	P112	FFC	NCFC7-173512	1	2047173512	
EXPLODED	T901	P TRANS	NPT-1548D	1	2301878	!
EXPLODED	U01	MAIN PC board ass'y	NAAR-8979-1A	1	1B159579-1A	
EXPLODED	U02	DISPLAY PC board ass'y	NADIS-8980-1A	1	1B159580-1A	
EXPLODED	U03	SWITCH PC board ass'y	NASW-8981-1A	1	1B159581-1A	
EXPLODED	U04	CONNECTOR PC board ass'y	NAETC-8982-1A (1B159582-1A)	1	---	NSP
EXPLODED	U05	HOLDER PC board ass'y	NAETC-9027-1A (1B159527-1A)	1	---	NSP
EXPLODED	U09	TUNER PC board ass'y	NARF-8850-2D (C-HDSAT)	1	1B159550-2D	

T-4555<MDC>

PRINTED CIRCUIT BOARD PARTS LIST

PWB1 **U01** MAIN PC BOARD (NAAR-8979-1A)
PWB1 **U02** DISPLAY PC BOARD (NADIS-8980-1A)
PWB1 **U03** SWITCH PC BOARD (NASW-8981-1A)
PWB1 **U04** CONNECTOR PC BOARD (NAETC-8982-1A)
PWB1 **U05** HOLDER PC BOARD (NAETC-9027-1A)

	CIRCUIT NO.	PART NAME	DESCRIPTION	Q'TY	PART NO. (SN)	REMARKS
PWB1	U442	PHT CP	PS2501AL-1	1	24120141R2	
PWB1	U751	REMO SENS	NJL33H380A	1	241369	

PWB1	Q101	IC (MICROPROCESSOR)	M3062LFGPFP U5(0204)	1	222W0048R302040	
PWB1	Q102	IC	S-24CS16A0I-J8V1G	1	22242326R2	
PWB1	Q112	TR	RN1404	1	2214490R2	
PWB1	Q112 or	TR	KRC104S	(1)	2216210R2	
PWB1	Q172	TR	RN1404	1	2214490R2	
PWB1	Q172 or	TR	KRC104S	(1)	2216210R2	
PWB1	Q173	TR	RN2402	1	2214530R2	
PWB1	Q173 or	TR	KRA102S	(1)	2216220R2	
PWB1	Q401	IC	ICL3221ECVZ	1	22242268R2	
PWB1	Q421	TR	RN1404	1	2214490R2	
PWB1	Q421 or	TR	KRC104S	(1)	2216210R2	
PWB1	Q422	TR	RN2402	1	2214530R2	
PWB1	Q422 or	TR	KRA102S	(1)	2216220R2	
PWB1	Q501	IC	NE5532APSR	1	22242283R2	
PWB1	Q503	TR	RN1441	1	2215410R2	
PWB1	Q504	TR	RN1441	1	2215410R2	
PWB1	Q505	TR	RN1441	1	2215410R2	

PWB1	Q506	TR	RN1441	1	2215410R2	
PWB1	Q751	IC	M66005-0001AHP	1	22242208R3	
PWB1	Q752	FL TUBE	16-ST-92GN	1	212262	
PWB1	Q753	TR	2SC2712-GR	1	2213145R2	
PWB1	Q753 or	TR	KTC3875-GR	(1)	2216175R2	
PWB1	Q801	IC	78M08HF(NJM78M08FA)	1	222780085JRC	
PWB1	Q802	IC	79M08HF(NJM79M08FA)	1	222790085JRC	
PWB1	Q821	IC	78M18HF(NJM78M18FA)	1	222780185JRC	
PWB1	Q822	TR	2SA1725-O	1	2202053	
PWB1	Q822A	HEAT SINK	RAD-164	1	27160499	
PWB1	Q822B	SCREW	3P+10FN(3BC)	1	82143010GR	
PWB1	Q831	TR	2SA965-Y(TPE6_F)	1	2211644T	
PWB1	Q841	IC	TA48033AF(TE16L_NQ)	1	22278033DR2T	
PWB1	Q842	TR	2SA1725-O	1	2202053	
PWB1	Q842B	SCREW	3P+10FN(3BC)	1	82143010GR	
PWB1	Q881	IC	78M05(NJM78M05FA)	1	222780055JRC	
PWB1	Q882	IC	S-812C33AUA-C2N	1	22242222R2	
PWB1	Q952	TR	2SC2712-GR	1	2213145R2	
PWB1	Q952 or	TR	KTC3875-GR	(1)	2216175R2	
PWB1	D118	C-DIODE	1SS355	1	223269R2	
PWB1	D118 or	C-DIODE	1SS352	(1)	223234R2	
PWB1	D118 or	C-DIODE	MA2J111	(1)	223279R2	
PWB1	D173	C-DIODE	1SS355	1	223269R2	
PWB1	D173 or	C-DIODE	1SS352	(1)	223234R2	
PWB1	D173 or	C-DIODE	MA2J111	(1)	223279R2	
PWB1	D212	C-DIODE	1SS355	1	223269R2	
PWB1	D212 or	C-DIODE	1SS352	(1)	223234R2	
PWB1	D212 or	C-DIODE	MA2J111	(1)	223279R2	
PWB1	D273	ZENER D	UDZS5.1B	1	224550510R2	
PWB1	D273 or	ZENER D	MAZ8051	(1)	224750510R2	
PWB1	D421	C-DIODE	1SS355	1	223269R2	
PWB1	D421 or	C-DIODE	1SS352	(1)	223234R2	
PWB1	D421 or	C-DIODE	MA2J111	(1)	223279R2	
PWB1	D422	C-DIODE	1SS355	1	223269R2	

PWB1	D422 or	C-DIODE	1SS352	(1)	223234R2	
PWB1	D422 or	C-DIODE	MA2J111	(1)	223279R2	
PWB1	D444	SPCF D	SIR-34ST3F	1	225456	
PWB1	D701	LED	SLI-343URC-TE7	1	225449T	
PWB1	D761	ZENER D	UDZS8.2B	1	224550820R2	
PWB1	D761 or	ZENER D	MAZ8082	(1)	224750820R2	
PWB1	D801	DIODE	RL1N4003	1	22380260T	
PWB1	D801 or	DIODE	GP104003E	(1)	22380035T	
PWB1	D802	DIODE	RL1N4003	1	22380260T	
PWB1	D802 or	DIODE	GP104003E	(1)	22380035T	
PWB1	D803	DIODE	RL1N4003	1	22380260T	
PWB1	D803 or	DIODE	GP104003E	(1)	22380035T	
PWB1	D804	DIODE	RL1N4003	1	22380260T	
PWB1	D804 or	DIODE	GP104003E	(1)	22380035T	
PWB1	D821	DIODE	RL1N4003	1	22380260T	
PWB1	D821 or	DIODE	GP104003E	(1)	22380035T	
PWB1	D824	DIODE	RL1N4003	1	22380260T	

PWB1	D824 or	DIODE	GP104003E	(1)	22380035T	
PWB1	D831	DIODE	RL1N4003	1	22380260T	
PWB1	D831 or	DIODE	GP104003E	(1)	22380035T	
PWB1	D832	DIODE	RL1N4003	1	22380260T	
PWB1	D832 or	DIODE	GP104003E	(1)	22380035T	
PWB1	D833	ZENER D	UDZS27B	1	224552700R2	
PWB1	D841	DIODE	D4SBS4	1	22380353F	
PWB1	D841A	HEAT SINK	RAD-177	1	27160517	
PWB1	D841B	SCREW	3P+10FN(3BC)	1	82143010GR	
PWB1	D951	C-DIODE	1SS355	1	223269R2	
PWB1	D951 or	C-DIODE	1SS352	(1)	223234R2	
PWB1	D951 or	C-DIODE	MA2J111	(1)	223279R2	
PWB1	D952	C-DIODE	1SS355	1	223269R2	
PWB1	D952 or	C-DIODE	1SS352	(1)	223234R2	
PWB1	D952 or	C-DIODE	MA2J111	(1)	223279R2	
PWB1	D953	C-DIODE	1SS355	1	223269R2	
PWB1	D953 or	C-DIODE	1SS352	(1)	223234R2	
PWB1	D953 or	C-DIODE	MA2J111	(1)	223279R2	
PWB1	D954	C-DIODE	1SS355	1	223269R2	
PWB1	D954 or	C-DIODE	1SS352	(1)	223234R2	
PWB1	D954 or	C-DIODE	MA2J111	(1)	223279R2	
PWB1	D955	C-DIODE	1SS355	1	223269R2	
PWB1	D955 or	C-DIODE	1SS352	(1)	223234R2	
PWB1	D955 or	C-DIODE	MA2J111	(1)	223279R2	
PWB1	D956	C-DIODE	1SS355	1	223269R2	
PWB1	D956 or	C-DIODE	1SS352	(1)	223234R2	
PWB1	D956 or	C-DIODE	MA2J111	(1)	223279R2	
PWB1	D957	C-DIODE	1SS355	1	223269R2	
PWB1	D957 or	C-DIODE	1SS352	(1)	223234R2	
PWB1	D957 or	C-DIODE	MA2J111	(1)	223279R2	
PWB1	D958	C-DIODE	1SS355	1	223269R2	
PWB1	D958 or	C-DIODE	1SS352	(1)	223234R2	
PWB1	D958 or	C-DIODE	MA2J111	(1)	223279R2	
PWB1	D959	C-DIODE	1SS355	1	223269R2	

PWB1	D959 or	C-DIODE	1SS352	(1)	223234R2	
PWB1	D959 or	C-DIODE	MA2J111	(1)	223279R2	
PWB1	D960	C-DIODE	1SS355	1	223269R2	
PWB1	D960 or	C-DIODE	1SS352	(1)	223234R2	
PWB1	D960 or	C-DIODE	MA2J111	(1)	223279R2	
PWB1	D961	C-DIODE	1SS355	1	223269R2	
PWB1	D961 or	C-DIODE	1SS352	(1)	223234R2	
PWB1	D961 or	C-DIODE	MA2J111	(1)	223279R2	
PWB1	D962	ZENER D	UDZS7.5B	1	224550750R2	
PWB1	D962 or	ZENER D	MAZ8075	(1)	224750750R2	
PWB1	D991	C-DIODE	1SS355	1	223269R2	
PWB1	D991 or	C-DIODE	1SS352	(1)	223234R2	
PWB1	D991 or	C-DIODE	MA2J111	(1)	223279R2	
PWB1	D992	C-DIODE	1SS355	1	223269R2	
PWB1	D992 or	C-DIODE	1SS352	(1)	223234R2	
PWB1	D992 or	C-DIODE	MA2J111	(1)	223279R2	
PWB1	L751	CHOKE COIL	NCH-1471	1	231237M022R2	

PWB1	L752	CHOKE COIL	NCH-1471	1	231237M022R2	
PWB1	X101	CERA LOCK	CSTCR6M0055-R0	1	3010397R2	
PWB1	C102	C-CERA C	CK725F1H-104Z1	1	332151040R1	
PWB1	C212	C-CERA C	CK725F1H-104Z1	1	332151040R1	
PWB1	C216	C-CERA C	CK725F1H-104Z1	1	332151040R1	
PWB1	C218	C-CERA C	CK725F1H-104Z1	1	332151040R1	
PWB1	C262	C-CERA C	CK725F1H-104Z1	1	332151040R1	
PWB1	C268	C-CERA C	CK725B1H-102K1	1	332101025R1	
PWB1	C269	C-CERA C	CK725B1H-102K1	1	332101025R1	
PWB1	C294	C-CERA C	CK725B1H-102K1	1	332101025R1	
PWB1	C295	C-CERA C	CK725B1H-102K1	1	332101025R1	
PWB1	C297	C-CERA C	CK725B1H-102K1	1	332101025R1	
PWB1	C298	C-CERA C	CK725F1H-104Z1	1	332151040R1	
PWB1	C299	VR C	CE04W6.3V-100M(VR)	1	394621017T	
PWB1	C312	VR C	CE04W16V-10M(VR)	1	394641007T	
PWB1	C401	VR C	CE04W6.3V-100M(VR)	1	394621017T	
PWB1	C402	VR C	CE04W50V-1M(VR)	1	394680107T	
PWB1	C403	VR C	CE04W50V-1M(VR)	1	394680107T	
PWB1	C404	VR C	CE04W50V-1M(VR)	1	394680107T	
PWB1	C405	VR C	CE04W50V-1M(VR)	1	394680107T	
PWB1	C421	VR C	CE04W50V-1M(VR)	1	394680107T	
PWB1	C422	C-CERA C	CK725F1H-104Z1	1	332151040R1	
PWB1	C423	VR C	CE04W16V-470M(VR)	1	394644717T	
PWB1	C451	C-CERA C	CK725F1H-104Z1	1	332151040R1	
PWB1	C501	TF C	ECQ-B50V-101K	1	374721015T	
PWB1	C502	TF C	ECQ-B50V-101K	1	374721015T	
PWB1	C503	VX C	CE04W50V 47M(VX_BLK)	1	397384707T	
PWB1	C504	VX C	CE04W50V 47M(VX_BLK)	1	397384707T	
PWB1	C505	VX C	CE04W50V 47M(VX_BLK)	1	397384707T	
PWB1	C506	VX C	CE04W50V 47M(VX_BLK)	1	397384707T	
PWB1	C507	TF C	ECQ-B50V-102J	1	374721024T	
PWB1	C508	TF C	ECQ-B50V-102J	1	374721024T	
PWB1	C509	VX C	CE04W25V-220M(VX_BLK)	1	397352217T	
PWB1	C510	VX C	CE04W25V-220M(VX_BLK)	1	397352217T	

PWB1	C751	ELECT C	CE04W6.3V-100M	1	355721019T	
PWB1	C752	VR C	CE04W6.3V-100M(VR)	1	394621017T	
PWB1	C753	C-CERA C	CK725F1H-104Z1	1	332151040R1	
PWB1	C754	C-CERA C	CK725F1H-104Z1	1	332151040R1	
PWB1	C755	C-CERA C	CC725CH1H-101J1	1	342101014R1	
PWB1	C756	C-CERA C	CK725B1H-103K1	1	332101035R1	
PWB1	C757	C-CERA C	CC725CH1H-101J1	1	342101014R1	
PWB1	C761	VR C	CE04W50V-47M(VR)	1	394684707T	
PWB1	C767	C-CERA C	CK725B1H-103K1	1	332101035R1	
PWB1	C768	VR C	CE04W50V-47M(VR)	1	394684707T	
PWB1	C801	TF C	ECQ-V50V-334J	1	374723344T	
PWB1	C802	TF C	ECQ-V50V-334J	1	374723344T	
PWB1	C803	VX C	CE04W25V-470M(VX_BLK)	1	397354717T	
PWB1	C804	VX C	CE04W25V-330M(VX_BLK)	1	397353317T	
PWB1	C805	VR C	CE04W50V-10M(VR)	1	394681007T	
PWB1	C806	VR C	CE04W50V-10M(VR)	1	394681007T	
PWB1	C807	VR C	CE04W16V-220M(VR)	1	394642217T	

PWB1	C808	VR C	CE04W16V-220M(VR)	1	394642217T	
PWB1	C821	TF C	ECQ-V50V-334J	1	374723344T	
PWB1	C822	TF C	ECQ-V50V-334J	1	374723344T	
PWB1	C823	VR C	CE04W35V-3300M(VR)	1	394663327S	
PWB1	C824	VR C	CE04W50V-10M(VR)	1	394681007T	
PWB1	C825	VR C	CE04W50V-10M(VR)	1	394681007T	
PWB1	C831	VR C	CE04W63V-220M(VR)	1	394672217T	
PWB1	C832	VR C	CE04W100V-220M(VR)	1	394692217S	
PWB1	C833	VR C	CE04W50V-47M(VR)	1	394684707T	
PWB1	C834	C-CERA C	CK725F1H-104Z1	1	332151040R1	
PWB1	C841	TF C	ECQ-V50V-334J	1	374723344T	
PWB1	C842	VR C	CE04W16V-6800M(VR)	1	394646827S	
PWB1	C843	VR C	CE04W50V-10M(VR)	1	394681007T	
PWB1	C844	VR C	CE04W50V-10M(VR)	1	394681007T	
PWB1	C861	CERA C	CK45F50V-223Z	1	335622230T	
PWB1	C881	VR C	CE04W50V-10M(VR)	1	394681007T	
PWB1	C882	VR C	CE04W50V-10M(VR)	1	394681007T	
PWB1	C883	VR C	CE04W50V-10M(VR)	1	394681007T	
PWB1	C901	IS C	ECQU2A103MLC	1	3800039S	!
PWB1	C951	C-CERA C	CK725F1H-104Z1	1	332151040R1	
PWB1	C952	VR C	CE04W35V-2200M(VR)	1	394662227S	
PWB1	C953	VR C	CE04W35V-100M(VR)	1	394661017T	
PWB1	C954	VR C	CE04W50V-4.7M(VR)	1	394680477T	
PWB1	C991	C-CERA C	CK725F1H-104Z1	1	332151040R1	
PWB1	R109	C-CARBON R	RN72K1J-102JE	1	435031024R1	
PWB1	R110	C-CARBON R	RN72K1J-102JE	1	435031024R1	
PWB1	R111	C-CARBON R	RN72K1J-102JE	1	435031024R1	
PWB1	R112	C-CARBON R	RN72K1J-102JE	1	435031024R1	
PWB1	R118	C-CARBON R	RN72K1J-102JE	1	435031024R1	
PWB1	R119	C-CARBON R	RN72K1J-102JE	1	435031024R1	
PWB1	R120	C-CARBON R	RN72K1J-221JE	1	435032214R1	
PWB1	R121	C-CARBON R	RN72K1J-221JE	1	435032214R1	
PWB1	R122	C-CARBON R	RN72K1J-221JE	1	435032214R1	
PWB1	R123	C-CARBON R	RN72K1J-221JE	1	435032214R1	

PWB1	R124	C-CARBON R	RN72K1J-221JE	1	435032214R1	
PWB1	R125	C-CARBON R	RN72K1J-221JE	1	435032214R1	
PWB1	R126	C-CARBON R	RN72K1J-221JE	1	435032214R1	
PWB1	R127	C-CARBON R	RN72K1J-221JE	1	435032214R1	
PWB1	R129	C-CARBON R	RN72K1J-000JE	1	435030004R1	
PWB1	R130	C-CARBON R	RN72K1J-000JE	1	435030004R1	
PWB1	R131	C-CARBON R	RN72K1J-470JE	1	435034704R1	
PWB1	R132	C-CARBON R	RN72K1J-470JE	1	435034704R1	
PWB1	R133	C-CARBON R	RN72K1J-470JE	1	435034704R1	
PWB1	R134	C-CARBON R	RN72K1J-470JE	1	435034704R1	
PWB1	R135	C-CARBON R	RN72K1J-101JE	1	435031014R1	
PWB1	R136	C-CARBON R	RN72K1J-101JE	1	435031014R1	
PWB1	R138	C-CARBON R	RN72K1J-102JE	1	435031024R1	
PWB1	R139	C-CARBON R	RN72K1J-102JE	1	435031024R1	
PWB1	R147	C-CARBON R	RN72K1J-102JE	1	435031024R1	
PWB1	R157	C-CARBON R	RN72K1J-102JE	1	435031024R1	
PWB1	R168	C-CARBON R	RN72K1J-102JE	1	435031024R1	

PWB1	R169	C-CARBON R	RN72K1J-102JE	1	435031024R1	
PWB1	R173	C-CARBON R	RN72K1J-473JE	1	435034734R1	
PWB1	R175	C-CARBON R	RN72K1J-102JE	1	435031024R1	
PWB1	R184	C-CARBON R	RN72K1J-222JE	1	435032224R1	
PWB1	R185	C-CARBON R	RN72K1J-221JE	1	435032214R1	
PWB1	R186	C-CARBON R	RN72K1J-221JE	1	435032214R1	
PWB1	R187	C-CARBON R	RN72K1J-221JE	1	435032214R1	
PWB1	R188	C-CARBON R	RN72K1J-221JE	1	435032214R1	
PWB1	R192	C-CARBON R	RN72K1J-102JE	1	435031024R1	
PWB1	R194	C-CARBON R	RN72K1J-102JE	1	435031024R1	
PWB1	R195	C-CARBON R	RN72K1J-102JE	1	435031024R1	
PWB1	R197	C-CARBON R	RN72K1J-102JE	1	435031024R1	
PWB1	R209	C-CARBON R	RN72K1J-103JE	1	435031034R1	
PWB1	R210	C-CARBON R	RN72K1J-473JE	1	435034734R1	
PWB1	R211	C-CARBON R	RN72K1J-473JE	1	435034734R1	
PWB1	R228	C-CARBON R	RN72K1J-473JE	1	435034734R1	
PWB1	R241	C-CARBON R	RN72K1J-103JE	1	435031034R1	
PWB1	R244	C-CARBON R	RN72K1J-103JE	1	435031034R1	
PWB1	R265	C-CARBON R	RN72K1J-473JE	1	435034734R1	
PWB1	R266	C-CARBON R	RN72K1J-473JE	1	435034734R1	
PWB1	R267	C-CARBON R	RN72K1J-473JE	1	435034734R1	
PWB1	R270	C-CARBON R	RN72K1J-103JE	1	435031034R1	
PWB1	R271	C-CARBON R	RN72K1J-103JE	1	435031034R1	
PWB1	R273	C-CARBON R	RN72K1J-104JE	1	435031044R1	
PWB1	R312	C-CARBON R	RN72K1J-473JE	1	435034734R1	
PWB1	R317	C-CARBON R	RN72K1J-103JE	1	435031034R1	
PWB1	R318	C-CARBON R	RN72K1J-105JE	1	435031054R1	
PWB1	R319	C-CARBON R	RN72K1J-473JE	1	435034734R1	
PWB1	R320	C-CARBON R	RN72K1J-473JE	1	435034734R1	
PWB1	R324	C-CARBON R	RN72K1J-103JE	1	435031034R1	
PWB1	R329	C-CARBON R	RN72K1J-103JE	1	435031034R1	
PWB1	R330	C-CARBON R	RN72K1J-103JE	1	435031034R1	
PWB1	R331	C-CARBON R	RN72K1J-103JE	1	435031034R1	
PWB1	R332	C-CARBON R	RN72K1J-103JE	1	435031034R1	

PWB1	R335	C-CARBON R	RN72K1J-222JE	1	435032224R1	
PWB1	R336	C-CARBON R	RN72K1J-222JE	1	435032224R1	
PWB1	R338	C-CARBON R	RN72K1J-473JE	1	435034734R1	
PWB1	R339	C-CARBON R	RN72K1J-473JE	1	435034734R1	
PWB1	R346	C-CARBON R	RN72K1J-103JE	1	435031034R1	
PWB1	R368	C-CARBON R	RN72K1J-103JE	1	435031034R1	
PWB1	R369	C-CARBON R	RN72K1J-103JE	1	435031034R1	
PWB1	R389	C-CARBON R	RN72K1J-473JE	1	435034734R1	
PWB1	R390	C-CARBON R	RN72K1J-473JE	1	435034734R1	
PWB1	R391	C-CARBON R	RN72K1J-473JE	1	435034734R1	
PWB1	R393	C-CARBON R	RN72K1J-473JE	1	435034734R1	
PWB1	R394	C-CARBON R	RN72K1J-272JE	1	435032724R1	
PWB1	R395	C-CARBON R	RN72K1J-272JE	1	435032724R1	
PWB1	R397	C-CARBON R	RN72K1J-272JE	1	435032724R1	
PWB1	R401	C-CARBON R	RN72K1J-102JE	1	435031024R1	
PWB1	R402	C-CARBON R	RN72K1J-221JE	1	435032214R1	
PWB1	R403	C-CARBON R	RN72K1J-221JE	1	435032214R1	

PWB1	R404	C-CARBON R	RN72K1J-221JE	1	435032214R1	
PWB1	R405	C-CARBON R	RN72K1J-221JE	1	435032214R1	
PWB1	R421	C-CARBON R	RN72K1J-103JE	1	435031034R1	
PWB1	R422	C-CARBON R	RN72K1J-222JE	1	435032224R1	
PWB1	R423	C-CARBON R	RN72K1J-102JE	1	435031024R1	
PWB1	R424	C-CARBON R	RN72K1J-224JE	1	435032244R1	
PWB1	R441	C-CARBON R	RN72K1J-471JE	1	435034714R1	
PWB1	R442	C-CARBON R	RN72K1J-103JE	1	435031034R1	
PWB1	R443	C-CARBON R	RN72K1J-101JE	1	435031014R1	
PWB1	R501	C-CARBON R	RN72K1J-222JE	1	435032224R1	
PWB1	R502	C-CARBON R	RN72K1J-222JE	1	435032224R1	
PWB1	R503	C-CARBON R	RN72K1J-224JE	1	435032244R1	
PWB1	R504	C-CARBON R	RN72K1J-224JE	1	435032244R1	
PWB1	R505	C-CARBON R	RN72K1J-224JE	1	435032244R1	
PWB1	R506	C-CARBON R	RN72K1J-224JE	1	435032244R1	
PWB1	R507	C-CARBON R	RN72K1J-473JE	1	435034734R1	
PWB1	R508	C-CARBON R	RN72K1J-473JE	1	435034734R1	
PWB1	R509	C-CARBON R	RN72K1J-271JE	1	435032714R1	
PWB1	R510	C-CARBON R	RN72K1J-271JE	1	435032714R1	
PWB1	R511	C-CARBON R	RN72K1J-101JE	1	435031014R1	
PWB1	R512	C-CARBON R	RN72K1J-101JE	1	435031014R1	
PWB1	R513	C-CARBON R	RN72K1J-101JE	1	435031014R1	
PWB1	R514	C-CARBON R	RN72K1J-101JE	1	435031014R1	
PWB1	R515	C-CARBON R	RN72K1J-223JE	1	435032234R1	
PWB1	R516	C-CARBON R	RN72K1J-223JE	1	435032234R1	
PWB1	R517	C-CARBON R	RN72K1J-223JE	1	435032234R1	
PWB1	R518	C-CARBON R	RN72K1J-223JE	1	435032234R1	
PWB1	R519	C-CARBON R	RN72K1J-223JE	1	435032234R1	
PWB1	R520	C-CARBON R	RN72K1J-223JE	1	435032234R1	
PWB1	R521	C-CARBON R	RN72K1J-223JE	1	435032234R1	
PWB1	R522	C-CARBON R	RN72K1J-223JE	1	435032234R1	
PWB1	R523	METAL O R	RS1/2WBJ-22	1	443522204T	
PWB1	R524	METAL O R	RS1/2WBJ-22	1	443522204T	
PWB1	R701	C-CARBON R	RN72K1J-331JE	1	435033314R1	

PWB1	R702	C-CARBON R	RN72K1J-471JE	1	435034714R1	
PWB1	R711	C-CARBON R	RN72K1J-331JE	1	435033314R1	
PWB1	R712	C-CARBON R	RN72K1J-471JE	1	435034714R1	
PWB1	R713	C-CARBON R	RN72K1J-561JE	1	435035614R1	
PWB1	R714	C-CARBON R	RN72K1J-821JE	1	435038214R1	
PWB1	R721	C-CARBON R	RN72K1J-331JE	1	435033314R1	
PWB1	R722	C-CARBON R	RN72K1J-471JE	1	435034714R1	
PWB1	R723	C-CARBON R	RN72K1J-561JE	1	435035614R1	
PWB1	R724	C-CARBON R	RN72K1J-821JE	1	435038214R1	
PWB1	R751	C-CARBON R	RN72K1J-470JE	1	435034704R1	
PWB1	R752	C-CARBON R	RN72K1J-221JE	1	435032214R1	
PWB1	R753	C-CARBON R	RN72K1J-273JE	1	435032734R1	
PWB1	R754	C-CARBON R	RN72K1J-222JE	1	435032224R1	
PWB1	R755	C-CARBON R	RN72K1J-221JE	1	435032214R1	
PWB1	R756	C-CARBON R	RN72K1J-221JE	1	435032214R1	
PWB1	R757	C-CARBON R	RN72K1J-221JE	1	435032214R1	
PWB1	R758	C-CARBON R	RN72K1J-104JE	1	435031044R1	

PWB1	R761	C-CARBON R	RN72K1J-221JE	1	435032214R1	
PWB1	R762	C-CARBON R	RN72K1J-221JE	1	435032214R1	
PWB1	R801	METAL R	RNU1/2WCJ-1	1	453530104T	
PWB1	R802	METAL R	RNU1/2WCJ-1	1	453530104T	
PWB1	R803	METAL O R	RS1/2WBJ-22	1	443522204T	
PWB1	R804	METAL O R	RS1/2WBJ-22	1	443522204T	
PWB1	R821	METAL R	RNU1/2WCJ-0.15	1	453531594T	
PWB1	R824	METAL R	RNU1/2WCJ-0.15	1	453531594T	
PWB1	R825	METAL R	RNU1/2WCJ-3.9	1	453530394T	
PWB1	R826	METAL O R	RS1/2WBJ-22	1	443522204T	
PWB1	R827	METAL R	RNU1/2WCJ-0.1	1	453531094T	
PWB1	R831	METAL R	RNU1/2WCJ-1	1	453530104T	
PWB1	R832	METAL O R	RS1/2WBJ-22	1	443522204T	
PWB1	R833	C-CARBON R	RN72K1J-153JE	1	435031534R1	
PWB1	R834	C-CARBON R	RN72K1J-333JE	1	435033334R1	
PWB1	R841	THERMISTOR	RUE400	1	4000211	
PWB1	R842	METAL O R	RS1/2WBJ-22	1	443522204T	
PWB1	R843	METAL R	RNU1/2WCJ-0.1	1	453531094T	
PWB1	R861	METAL R	RNU1/2WCJ-3.9	1	453530394T	
PWB1	R951	METAL O R	RS1/2WBJ-100	1	443521014T	
PWB1	R952	METAL O R	RS1/2WBJ-100	1	443521014T	
PWB1	R953	C-CARBON R	RN72K1J-104JE	1	435031044R1	
PWB1	R959	C-CARBON R	RN72K1J-103JE	1	435031034R1	
PWB1	R960	C-CARBON R	RN72K1J-000JE	1	435030004R1	
PWB1	R961	C-CARBON R	RN72K1J-102JE	1	435031024R1	
PWB1	R962	C-CARBON R	RN72K1J-103JE	1	435031034R1	
PWB1	RL901	RELAY	NRL-1P5A-DC9-179	1	25065669	!
PWB1	S701	PUSH SW	NPS-111-S681	1	25035718T	
PWB1	S702	PUSH SW	NPS-111-S681	1	25035718T	
PWB1	S703	PUSH SW	NPS-111-S681	1	25035718T	
PWB1	S711	PUSH SW	NPS-111-S681	1	25035718T	
PWB1	S712	PUSH SW	NPS-111-S681	1	25035718T	
PWB1	S713	PUSH SW	NPS-111-S681	1	25035718T	
PWB1	S714	PUSH SW	NPS-111-S681	1	25035718T	

PWB1	S715	PUSH SW	NPS-111-S681	1	25035718T	
PWB1	S721	PUSH SW	NPS-111-S681	1	25035718T	
PWB1	S722	PUSH SW	NPS-111-S681	1	25035718T	
PWB1	S723	PUSH SW	NPS-111-S681	1	25035718T	
PWB1	S724	PUSH SW	NPS-111-S681	1	25035718T	
PWB1	S725	PUSH SW	NPS-111-S681	1	25035718T	
PWB1	P111A	SOCKET	NSCT-27P2120	1	25052223	
PWB1	P111B	SOCKET	NSCT-27P2157	1	25052260	
PWB1	P112A	SOCKET	NSCT-17P2110	1	25052213	
PWB1	P112B	SOCKET	NSCT-17P2147	1	25052250	
PWB1	P113A	PLUG	NPLG-3P485	1	25055510	
PWB1	P113B	SOCKET	NSCT-3P278	1	25050454	
PWB1	P114	JUMPER LEAD	JL3 250 B	1	---	NSP
PWB1	P114A	WIRE HOL	NSCT-3P874	1	25051087	
PWB1	P114B	WIRE HOL	NSCT-3P874	1	25051087	
PWB1	P121A	SOCKET	IMSA-9850S-30A-GF	1	25053200	
PWB1	P131A	SOCKET	NSCT-9P2427	1	25052530	

PWB1	P401	SOCKET	7906-09FHA	1	25053103	
PWB1	P441	ST JACK	HSJ1002-01-6020	1	25045647	
PWB1	P442	ST JACK	HSJ1002-01-6020	1	25045647	
PWB1	P443	ST JACK	HSJ1002-01-6020	1	25045647	
PWB1	P501	PIN JACK	NPJ-2PDWR583	1	25045803	
PWB1	P801A	PLUG	NPLG-3P150	1	25055166	
PWB1	P821A	PLUG	NPLG-4P151	1	25055167	
PWB1	P841A	PLUG	NPLG-5P152	1	25055168	
PWB1	P903	AC INLET	NPLG-2P913	1	25055960	!
PWB1	P911A	PLUG	NPLG-2P631	1	25055675	!
PWB1	P991	TRM(SCREW)	NEJITANSI M3	1	25065425	
PWB1	P998	WS CLAMP	CB-71683(L=50)	1	260261	
PWB1	P999	WS CLAMP	CB-71683(L=50)	1	260261	
PWB1	F901A	FUSE HOL	NSCT-1P2031	1	25052133T	!
PWB1	F901B	FUSE HOL	NSCT-1P2031	1	25052133T	!
PWB1	T902	P TRANS	NPT-1520JQ	1	2301812	!
PWB1	A001	CUSHION	t3 x 10 x 25	2	28141513	

PWB2 **U09** TUNER PC BOARD (NARF-8850-2D)

PWB2 NARF-8850-2D = NARF-8850-1D (For C-HDSAT)

PWB2 ---> Refer to service manual of "C-HDSAT" (Ref. No. 3989)

T-4555<MDC>

PACKING PROCEDURE PARTS LIST

<Notes>

(B) : Black model only

(S) : Silver model only

	REF. NO.	PART NAME	DESCRIPTION	Q'TY	PART NO. (SN)	REMARKS
PACKING	A450a	CARTON	T4555BMDC	1	29054742	N (B)
PACKING	A450b	CARTON	T4555SMDC	1	29054743	N (S)
PACKING	A451a	UPC LABEL	T4555B	(1)	29364917	N (B)
PACKING	A451b	UPC LABEL	T4555S	(1)	29364918	N (S)
PACKING	A601	PAD	(AS)DV-SP504 (L&R 1set)	1	29092321	

PACKING	A604	POLY BAG	w500xd650	1	29100249	
PACKING	A606	TAPE	(SEROHAN)NITTO NO.29	1	29110149	
PACKING	A607	PP TAPE	W48 OPP TAPE	1	29110148	
PACKING	A800	POLY BAG	w250xd350	1	29100250	
PACKING	A801	CORD AS	PIN CORD AS	1	2010326	
PACKING	A801 or	CORD AS	PIN CORD AS	(1)	2010381	
PACKING	A802	PLUG CORD	3.5-MINI PLUG (RI)	1	2010200	
PACKING	A803	REMO CON	RC-671T	1	24140671	
PACKING	A804	BATTERY	R6/AA(UM-3)	2	3010194	
PACKING	A804 or	BATTERY	R6/AA(UM-3)	(2)	3010054	
PACKING	A805	ANT COIL	NMA-3057	1	232140	
PACKING	A806	FM ANT AS	NHB1-00-007(NTSC)	1	292198	
PACKING	A811	INS MANUAL	En(T-4555)	1	29344514	N
PACKING	A812	INS MANUAL	U2FrEs(T-4555)	1	29344515	N
PACKING	A813	HANDBILL	(SIRIUS)	1	29380149	
PACKING	A814	WRNTY CARD	(ONKYO)	1	29365102A	
PACKING	P901	AC CORD	AS-UC-2	1	253352ATES	!
PACKING	P901 or	AC CORD	AS-UC-2	(1)	253297KAW	!

ONKYO CORPORATION
Sales & Product Planning Div. : 2-1, Nisshin-cho, Neyagawa-shi, OSAKA 572-8540, JAPAN
Tel: 072-831-8023 Fax: 072-831-8124

ONKYO U.S.A. CORPORATION
18 Park Way, Upper Saddle River, N.J. 07458, U.S.A.
Tel: 201-785-2600 Fax: 201-785-2650 http://www.us.onkyo.com/

ONKYO EUROPE ELECTRONICS GmbH
Liegnitzerstrasse 6, 82194 Groebenzell, GERMANY
Tel: +49-8142-4401-0 Fax: +49-8142-4401-555 http://www.eu.onkyo.com/

ONKYO EUROPE UK Office
Suite 1, Gregories Court, Gregories Road, Beaconsfield, Buckinghamshire, HP9 1HQ
UNITED KINGDOM Tel: +44-(0)1494-681515 Fax: +44(0)-1494-680452

ONKYO CHINA LIMITED
Units 2102-2107, Metroplaza Tower I, 223 Hing Fong Road, Kwai Chung,
N.T., HONG KONG Tel: 852-2429-3118 Fax: 852-2428-9039
http://www.ch.onkyo.com/

ONKYO
HOMEPAGE
http://www.onkyo.com/