Ref. No. 3944
062006

# ONKYO SERVICE MANUAL

## STEREO RECEIVER
## MODEL TX-8522

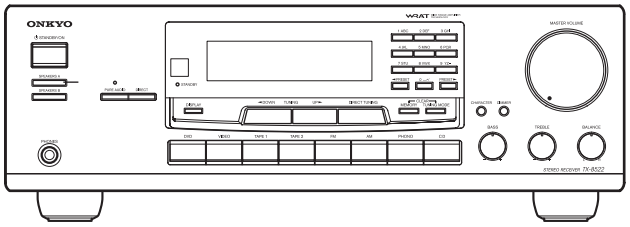

Other models

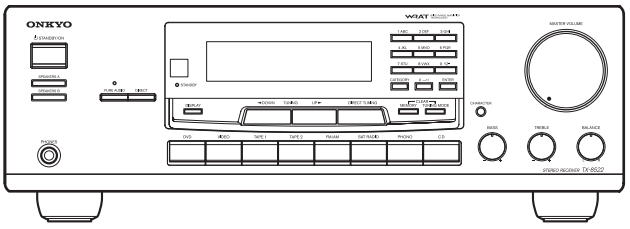

North American model

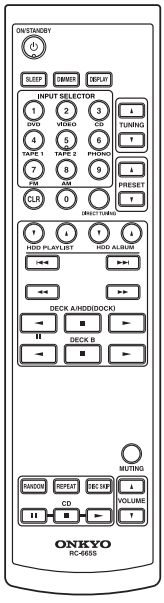

RC-666S

### Black and Silver models

| | |
|---|---|
| BMDD,BMDC | 120V AC, 60Hz |
| BMPP,SMPP,BMPA | 230-240V AC, 50Hz |

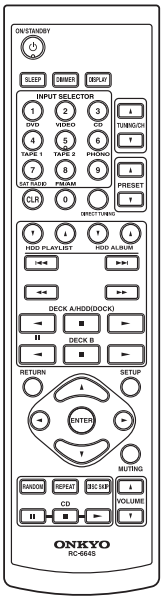

RC-664S

### SAFETY-RELATED COMPONENT WARNING!!

**COMPONENTS IDENTIFIED BY MARK ⚠ ON THE SCHEMATIC DIAGRAM AND IN THE PARTS LIST ARE CRITICAL FOR RISK OF FIRE AND ELECTRIC SHOCK. REPLACE THESE COMPONENTS WITH ONKYO PARTS WHOSE PART NUMBERS APPEAR AS SHOWN IN THIS MANUAL.**

**MAKE LEAKAGE-CURRENT OR RESISTANCE MEASUREMENTS TO DETERMINE THAT EXPOSED PARTS ARE ACCEPTABLY INSULATED FROM THE SUPPLY CIRCUIT BEFORE RETURNING THE APPLIANCE TO THE CUSTOMER.**

ONKYO®
IMAGINATIVE SIGHT & SOUND

# BLOCK DIAGRAM

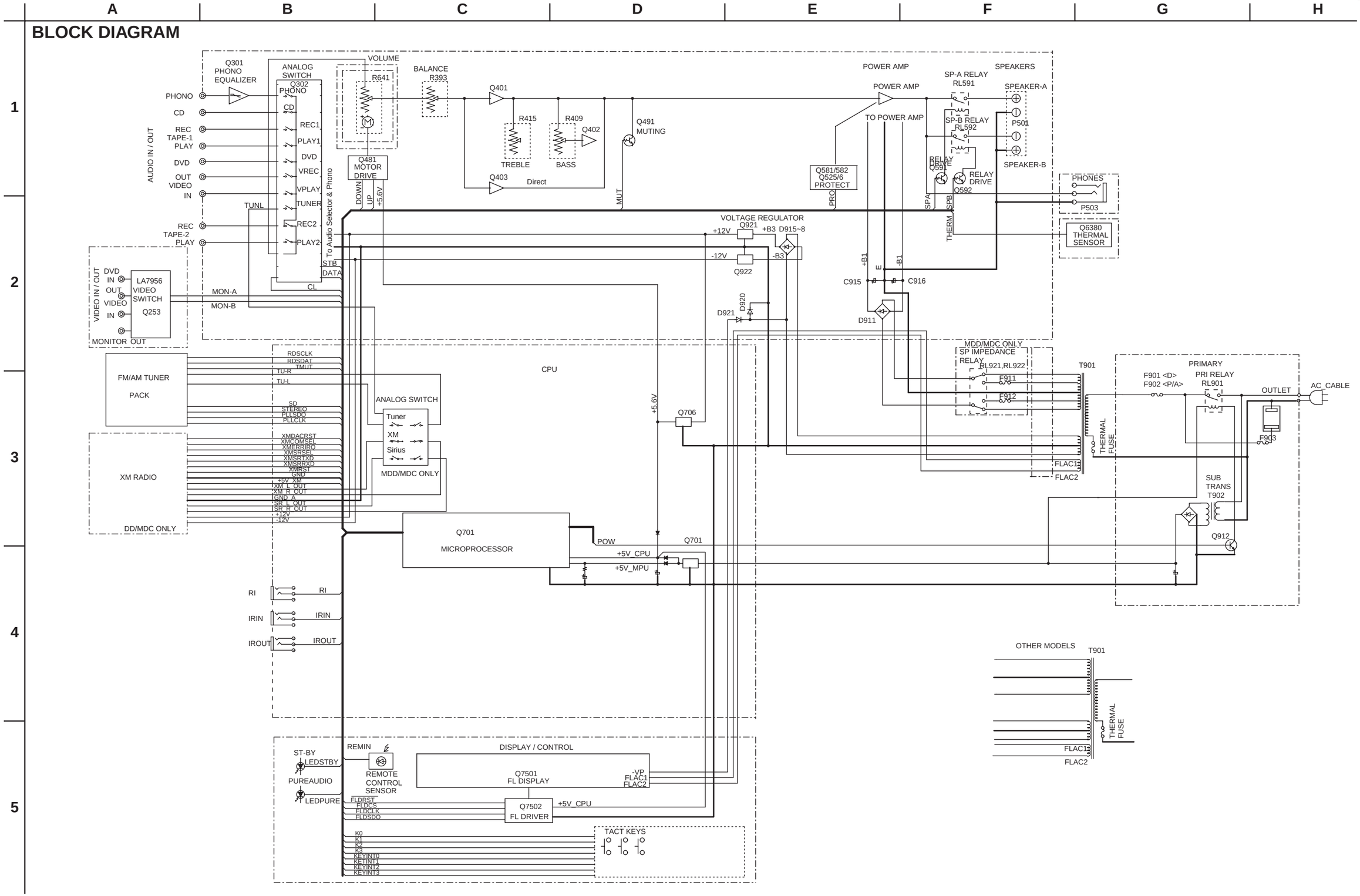

# SPECIFICATIONS

## *Amplifier Section*

| | |
|---|---|
| Rated Output Power (FTC) (North American) | |
| **All channels:** | **100 watts minimum continuous power per channel, 8 ohm loads, 2 channels driven from 20 Hz to 20 kHz, with a maximum total harmonic distortion of 0.08 %** |
| Rated Output Power (IEC) (European and Australian) | 2 ch × 100W at 4 ohms, 1 kHz, 2 ch driven |
| Maximum Output Power (JEITA) (Asian) | 130W at 4 ohms, 1 kHz, 2 ch driven |
| Dynamic Power | |
| North American: | 170W + 170W (2 Ω)<br>135W + 135W (4 Ω)<br>140W + 140W (8 Ω) |
| European and Australian: | 145W + 145W (2 Ω)<br>120W + 120W (4 Ω)<br>75W + 75W (8 Ω) |
| THD (Total Harmonic Distortion) | 0.08 % (Power Rated)/ 0.08 % (1 kHz, 1 W) |
| Damping Factor | 60 (Front, 1 kHz, 8Ω) |
| Input Sensitivity and Impedance | 150 mV/ 50 kΩ(LINE)<br>2.5 mV/ 50 kΩ(PHONO MM) |
| Output Level and Impedance | 150 mV/ 2.2 kΩ (REC OUT) |
| Frequency Response | 10 Hz~100 kHz/ +1 dB~ 3 dB (CD) |
| Tone Control | ±10 dB, 100 Hz (BASS)<br>±10 dB, 10 kHz (TREBLE) |
| Signal to Noise Ratio | 100 dB (LINE, IHF-A)<br>80 dB (PHONO, IHF-A) |
| Speaker Impedance | 4Ω ~16 Ω |

## *Video Section*

| | |
|---|---|
| Input Sensitivity/Output Level and Impedance | 1 Vp-p /75Ω(Composite) |

## *Tuner Section*

### ■ FM

| | |
|---|---|
| Tuning Frequency Range | North American: 87.5 MHz~107.9 MHz<br>Others: 87.5 MHz~108.0 MHz |
| Usable Sensitivity | Stereo: 22.2 dBf (75Ω IHF)<br>Mono: 15.2 dBf (75 Ω IHF) |
| Signal to Noise Ratio | Stereo: 67 dB (IHF-A)<br>Mono: 73 dB (IHF-A) |
| THD | Stereo: 0.5 % (1 kHz)<br>Mono: 0.3 % (1 kHz) |
| Frequency Response | 30 Hz~15 kHz / ±1 dB |
| Stereo Separation | 40 dB (1 kHz) |

### ■ AM

| | |
|---|---|
| Tuning Frequency Range | North American: 530 kHz~1710 kHz<br>Others: 522 kHz~1611 kHz |
| Usable Sensitivity | 300 µV |
| Signal to Noise Ratio | 40 dB |
| THD | 0.7 % |

## *General*

| | |
|---|---|
| Power Supply | North American:AC 120V, 60 Hz<br>European and Australian:<br>AC 230V, 50 Hz |
| Power Consumption | North American: 2.8 A<br>European and Australian: 220W |
| Standby Power Consumption | North American: 0.2W<br>European and Australian: 0.3 W |
| Dimensions (W × H × D) | 435 × 150 × 332 mm<br>17-1/8" × 5-7/8" × 13-11/16" |
| Weight | North American: 9.0 kg<br>19.8 lbs.<br>European and Australian: 8.4 kg<br>18.5 lbs. |

### ■ Video Inputs

| | |
|---|---|
| Composite | DVD, VIDEO |

### ■ Video Outputs

| | |
|---|---|
| Composite | VIDEO |

### ■ Audio Inputs

| | |
|---|---|
| Analog Inputs | PHONO, CD,TAPE 1,TAPE 2, DVD, VIDEO |

### ■ Audio Outputs

| | |
|---|---|
| Analog Outputs | TAPE 1,TAPE 2,VIDEO |
| Speaker Outputs | SPEAKERS A<br>SPEAKERS B |
| Phones | 1 |
| IR Input/Output | 1/1 |

Specfications and features are subject to change without notice.

# SERVICE PROCEDURES

## 1. Replacing the fuses

This symbol located near the fuses indicates that the fuse used is fast operating type. For continued protection against fire hazard, replace with same type fuse. For fuse rating refer to the marking adjacent to the symbol.

Ce symbole indique que le fusible utlise est a rapide. Pour une protection permanente, n'untiliser que fusibles de meme type. Ce darnier est la qu le present symbol est appse.

| CIRCUIT NO. | PART NO. | DESCRIPTION |
|---|---|---|
| F901 | 252327GR or<br>252259GR | 6A-UL/T-233 or<br>6A-T/UL-ST2 <D> |
| F902 | 252075GR or<br>252275GR | 2.5A-SE-EAK or<br>2.5A-SE-TL250V <P/A> |
| F903 | 252326GR or<br>252258GR<br>252075GR or<br>252275GR | 5A-UL/T-233 or<br>5A-T/UL-ST2 <D><br>2.5A-SE-EAK or<br>2.5A-SE-TL250V <P/A> |
| F911,F912 | 252329GR or<br>252261GR | 8A-UL/T-233 or<br>8A-T/UL-ST2 <D> |
| F913,F914 | 252325GR or<br>252257GR | 4A-UL/T-233 or<br>4A-T/UL-ST2 <D> |

Note: <D>:North American model only
<P>: European model only
<A>: Australian model only

## 2. To initialize the unit

The TX-8522 contain a micro processor for signal processing and control functions. In very rare situations, severe interference, noise from an external source, or static electricity may cause it to lockup. In the unlikely event that this happens, unplug the power cord from the wall outlet, wait at least Þve seconds, and then plug it back in again.

To reset the TX-8522 to its f actor y defaults, turn it on and, while holding down the VIDEO button, press the ST ANDBY/ON button. When the reset is complete, "Clear" appears on the display and the TX-8522 enter Standby mode.

## 3. Safety-check out

(U.S.A. model only)
After correcting the original service problem, perform the following safety check before releasing the set to the customer.

**Leakage Current Check**

Measure leakage current to a known earth ground(water pipe, conduit, etc.) by connecting a leakage current tester between the earth ground and exposed metal parts of the appliance (input/output terminals, screwheads,metal overlays, etc.). Plug the power supply cord directly into a 120V AC 60 Hz outlet and turn Standby switch on. Any current meausred must not exceed 0.5mA.

## 4. Memory backup

The TX-8522 use a batter y-less memory backup system (C704) in order to retain r adio presets and other settings when it's unplugged or in the case of a po wer failure. Although no batteries are required, it must be plugged into an AC outlet in order to charge the backup system. Once it has been charged, the TX-8522 will retain the settings for several weeks, although this depends on the environment and will be shorter in humid climates.

## EXPLODED VIEW

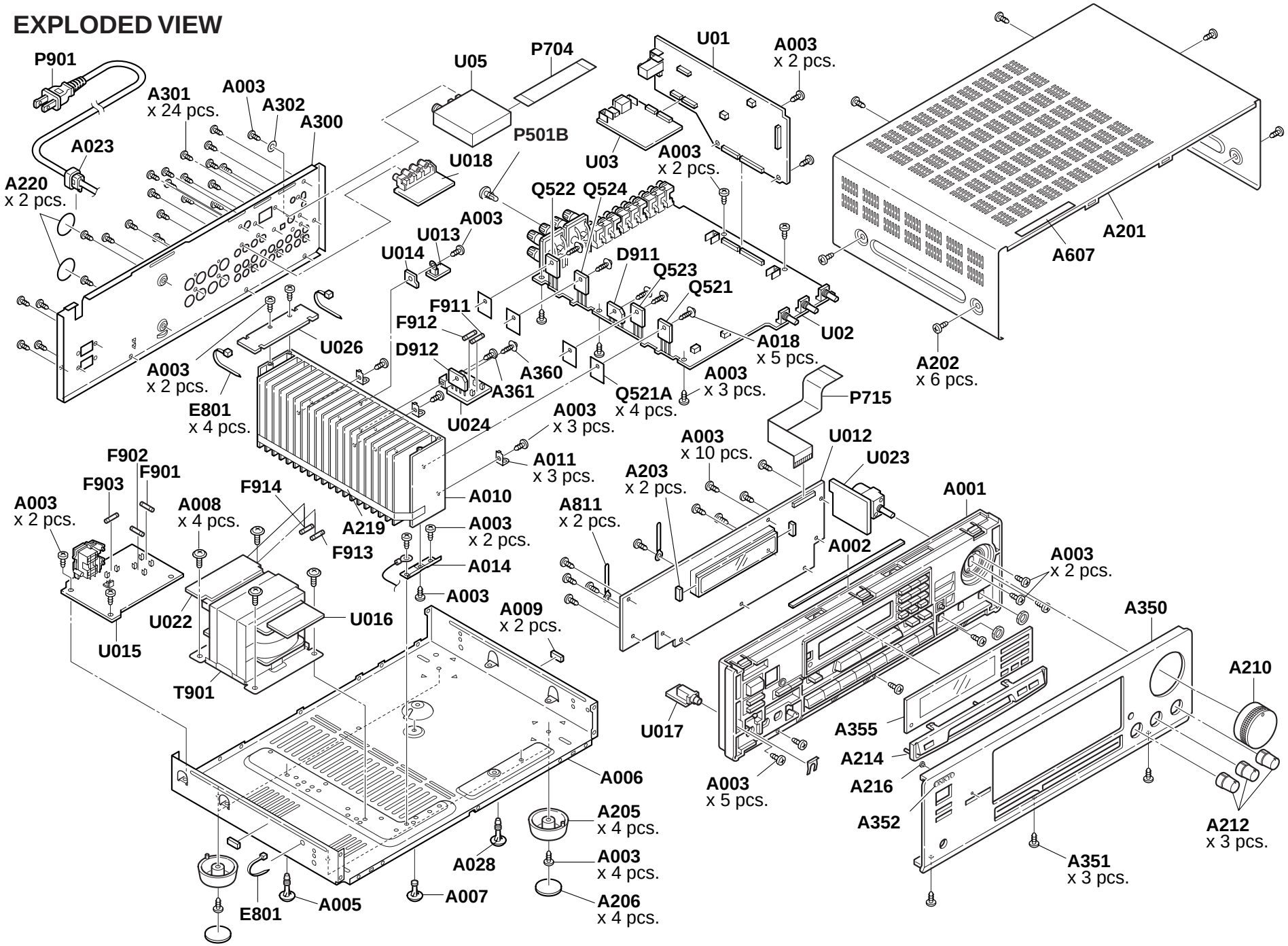

# BLOCK DIAGRAM

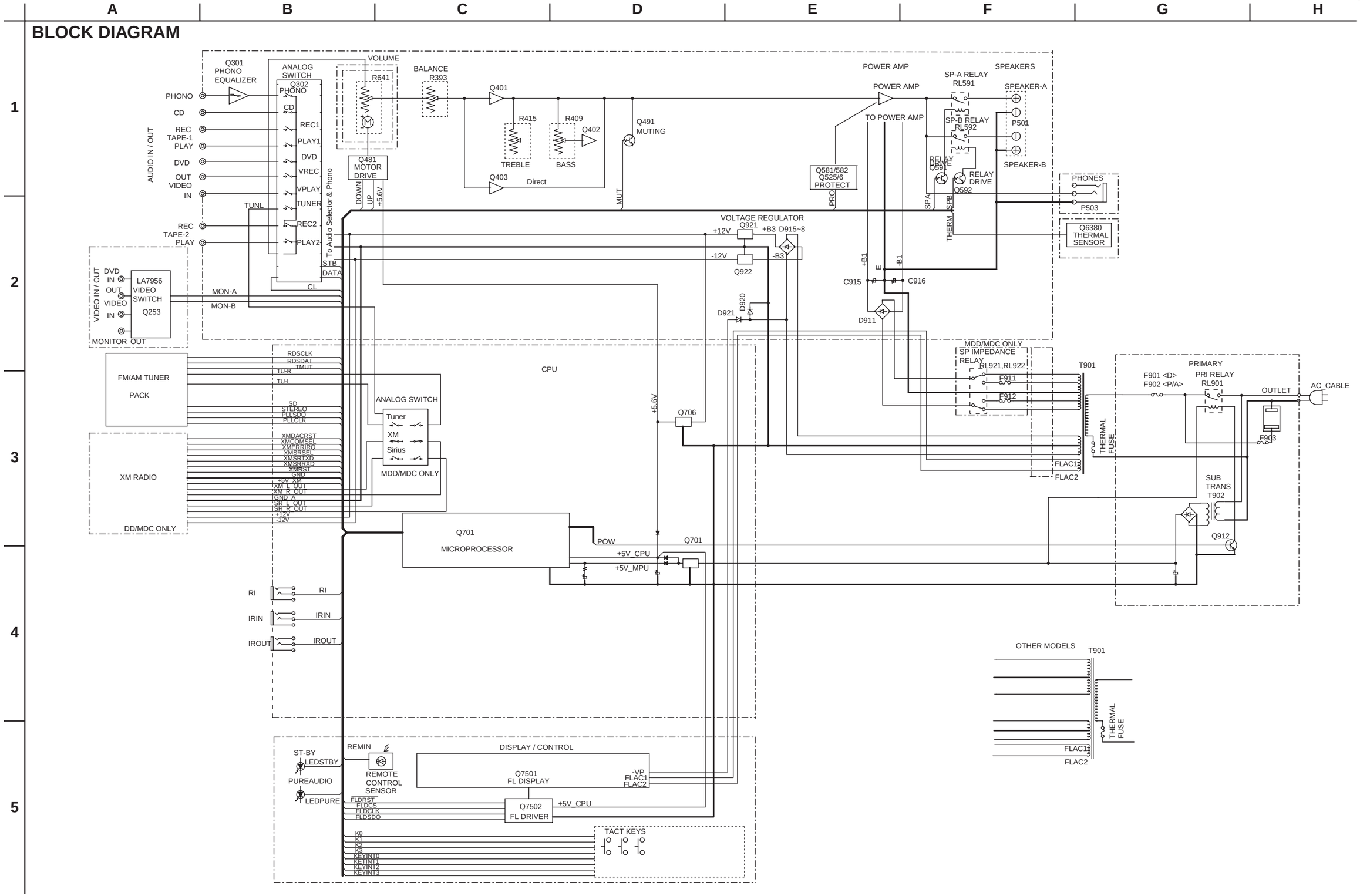

# SCHEMATIC DIAGRAM 1 AUDIO SECTION(North American model)

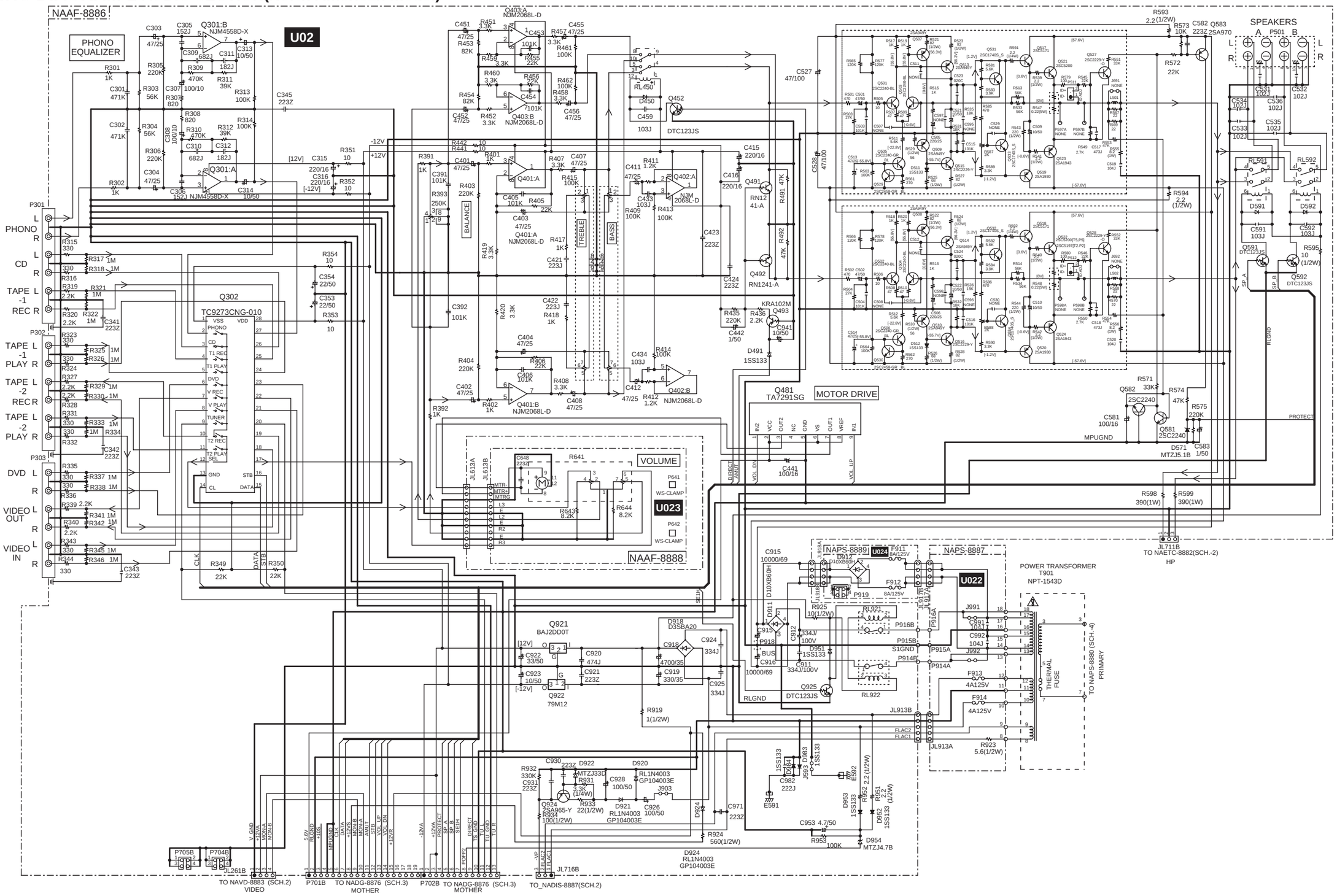
NAAF-8886
PHONO EQUALIZER
U02
Q301:B NJM4558D-X
Q301:A NJM4558D-X
Q302
TC9273CNG-010
Q401:A NJM2068L-D
Q401:B NJM2068L-D
Q402:A NJM2068L-D
Q402:B NJM2068L-D
Q403:A NJM2068L-D
Q403:B NJM2068L-D
BALANCE
TREBLE
BASS
VOLUME
U023
NAAF-8888
Q481 TA7291SG
MOTOR DRIVE
SPEAKERS
NAPS-8889
U024
NAPS-8887
U022
POWER TRANSFORMER T901 NPT-1543D
THERMAL FUSE
TO NAPS-8880 (SCH.-4) PRIMARY
TO NAEFC-8882(SCH.-2) HP
TO NAVD-8883 (SCH.2) VIDEO
TO NADG-8876 (SCH.3) MOTHER
TO NADG-8876 (SCH.3) MOTHER
TO_NADIS-8887(SCH.2)
PHONO
CD
TAPE -1 REC
TAPE -1 PLAY
TAPE -2 REC
TAPE -2 PLAY
DVD
VIDEO OUT
VIDEO IN
Q921 BAJ2DD0T
Q922 79M12
Q924 2SA965-Y
Q925 DTC123JS
Q452 DTC123JS
Q592 DTC123JS
Q582 2SC2240
Q581 2SC2240
Q583 2SA970
RL450
RL591
RL592
RL921
RL922
D450
D491 1SS133
D591
D592
D571 MTZJ5.1B
D954 MTZJ4.7B
D918 D3SBA20
D912 D10XB60H
D911 D10XB60H
D921 RL1N4003 GP104003E
D922 MTZJ33D
D920 RL1N4003 GP104003E
D924 RL1N4003 GP104003E
RLGND
MPUGND
PROTECT
SP A
SP B
JL711B
JL713B
JL713A
JL913A
JL913B
JL917A
JL917B
JL261B
JL716B
P705B
P704B
P701B
P702B
P301
P302
P303
P501
P641
P642
WS-CLAMP
MTR+
MTR-
MTRG
L1
L2
L3
R1
R2
R3
E
FLAC2
FLAC1
S1GND
BUS
VOL UP
VOL DN
DIRECT
AMUT
STB
DATA
CLK
SEL
SEIH
PGEF2
TS GND
TU GND
TU R
TU L
V GND
+12VA
MON-A
MON-B
5.6V
+12VS
+12VR
-12VA
+12V
-12V
[12V]
[-12V]
[57.6V]
[-57.6V]
[0.6V]
[-0.6V]
[1.2V]
[-1.2V]
[0V]
[-22.8V]
[55.8V]
[-55.8V]
[-55.7V]
[56.3V]
[-56.3V]
[-55.8V]
[-55.7V]
[-55.8V]
[-55.7V]
[-55.8V]
[-55.7

# SCHEMATIC DIAGRAM 1 AUDIO SECTION(Europe and Australian models)

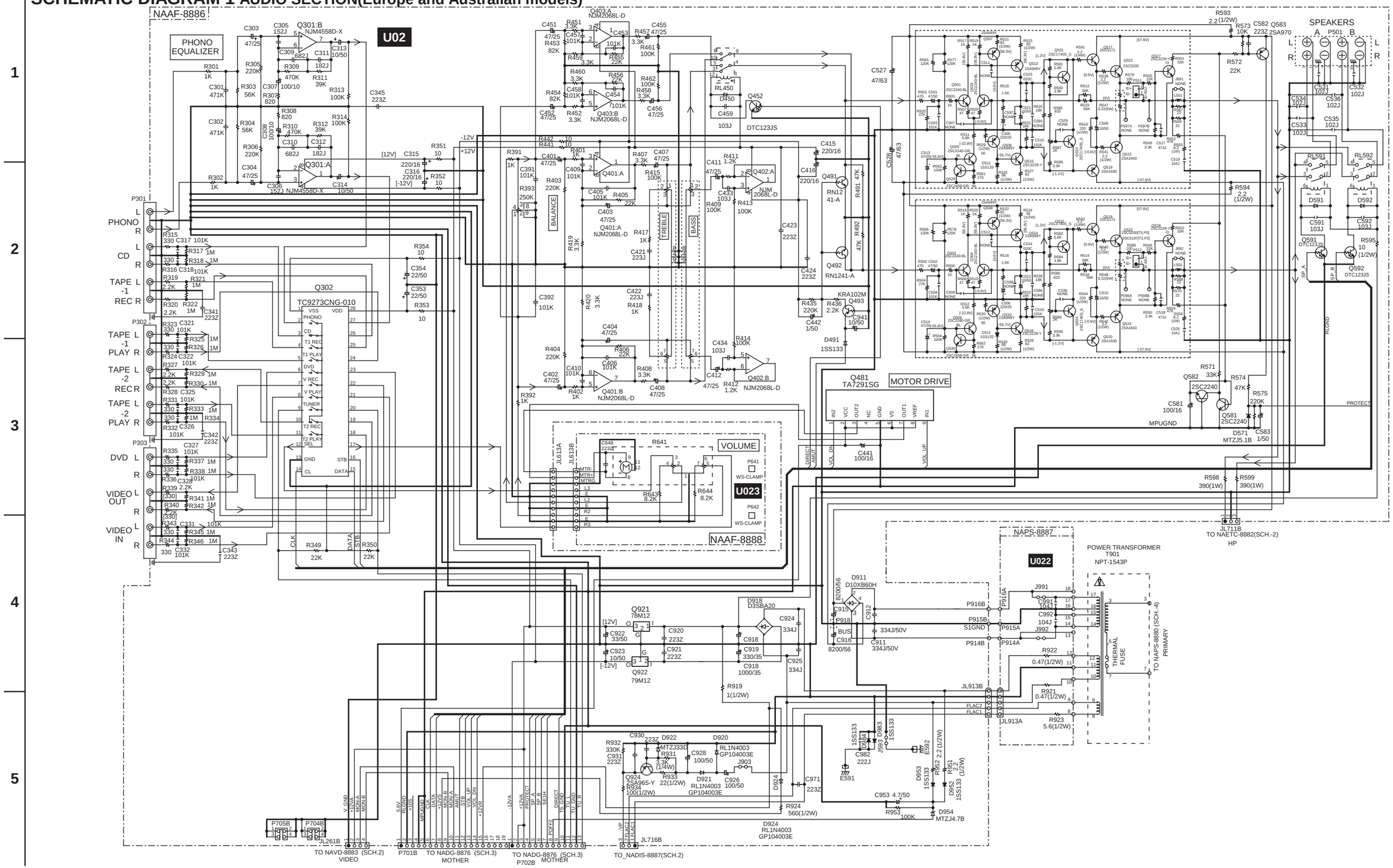

# SCHEMATIC DIAGRAM 1-2
## Power amplifier section

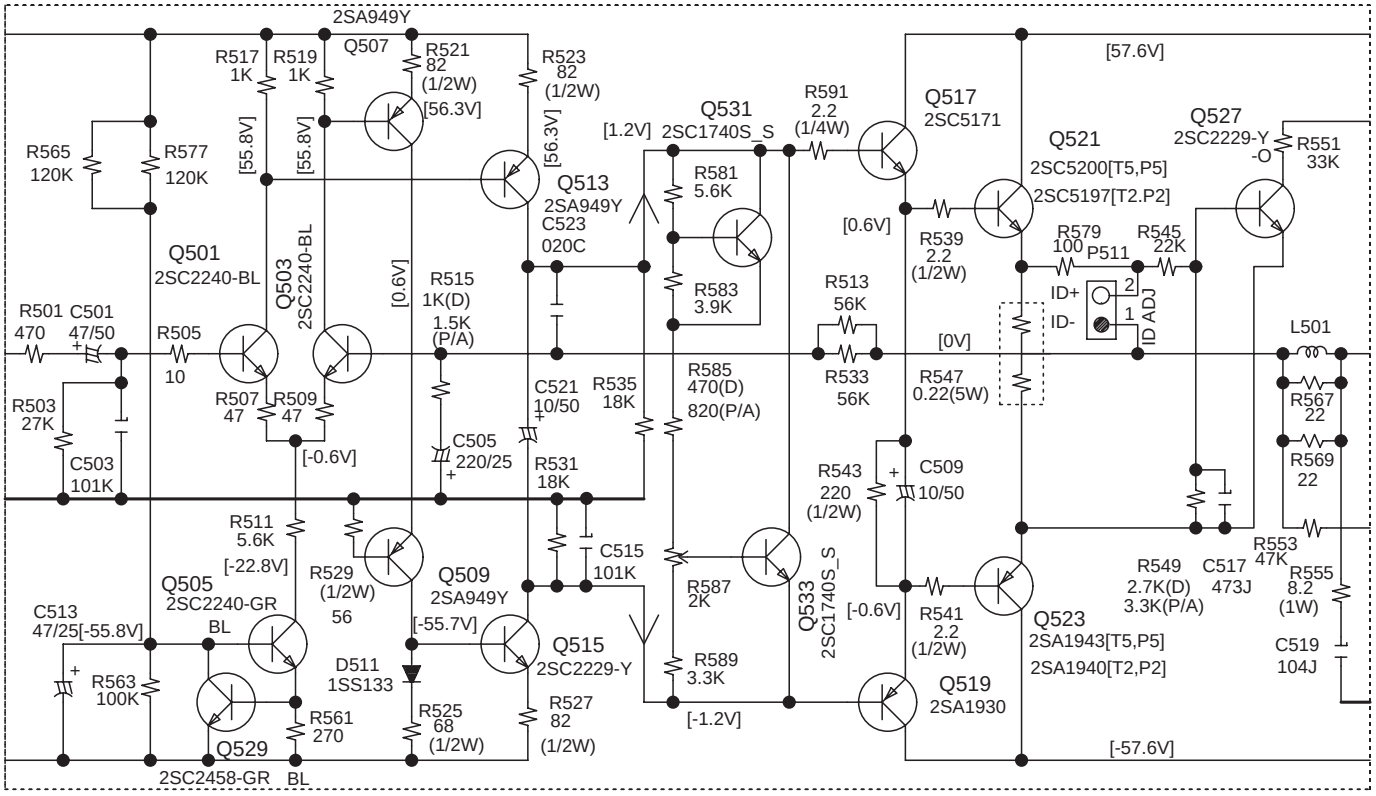


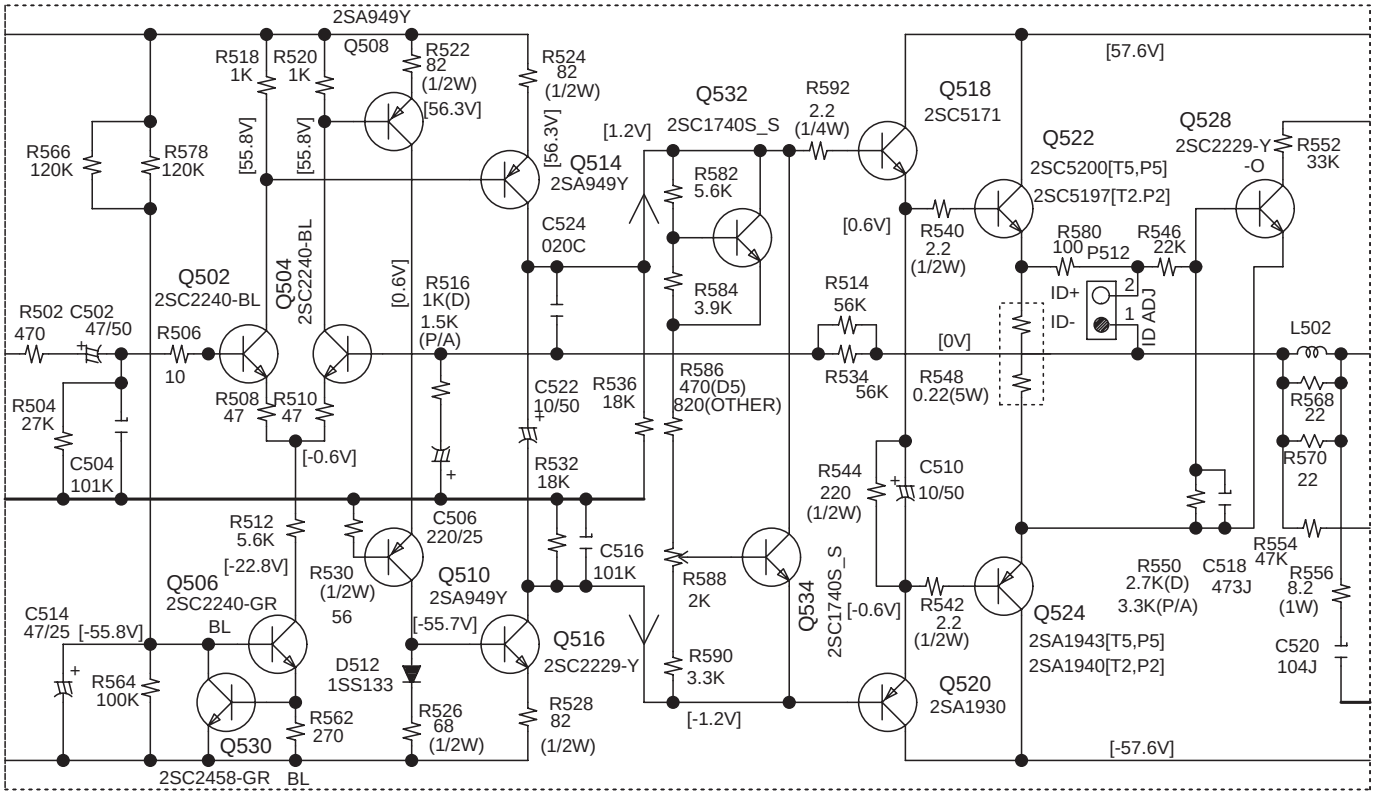

# SCHEMATIC DIAGRAM 2 DISPLAY SECTION

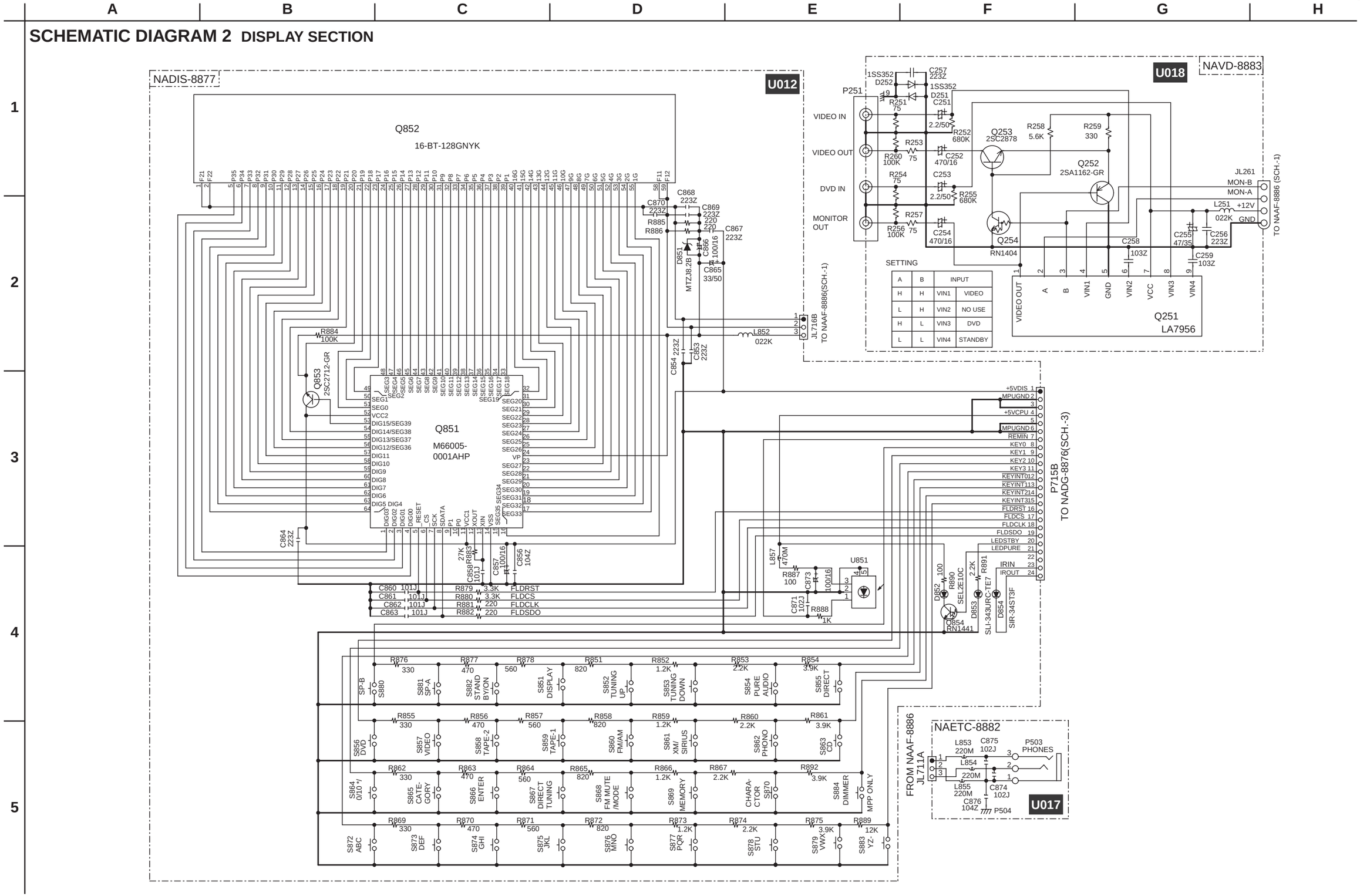

TX-8522

# SCHEMATIC DIAGRAM 3 MICROPROCESSOR SECTION

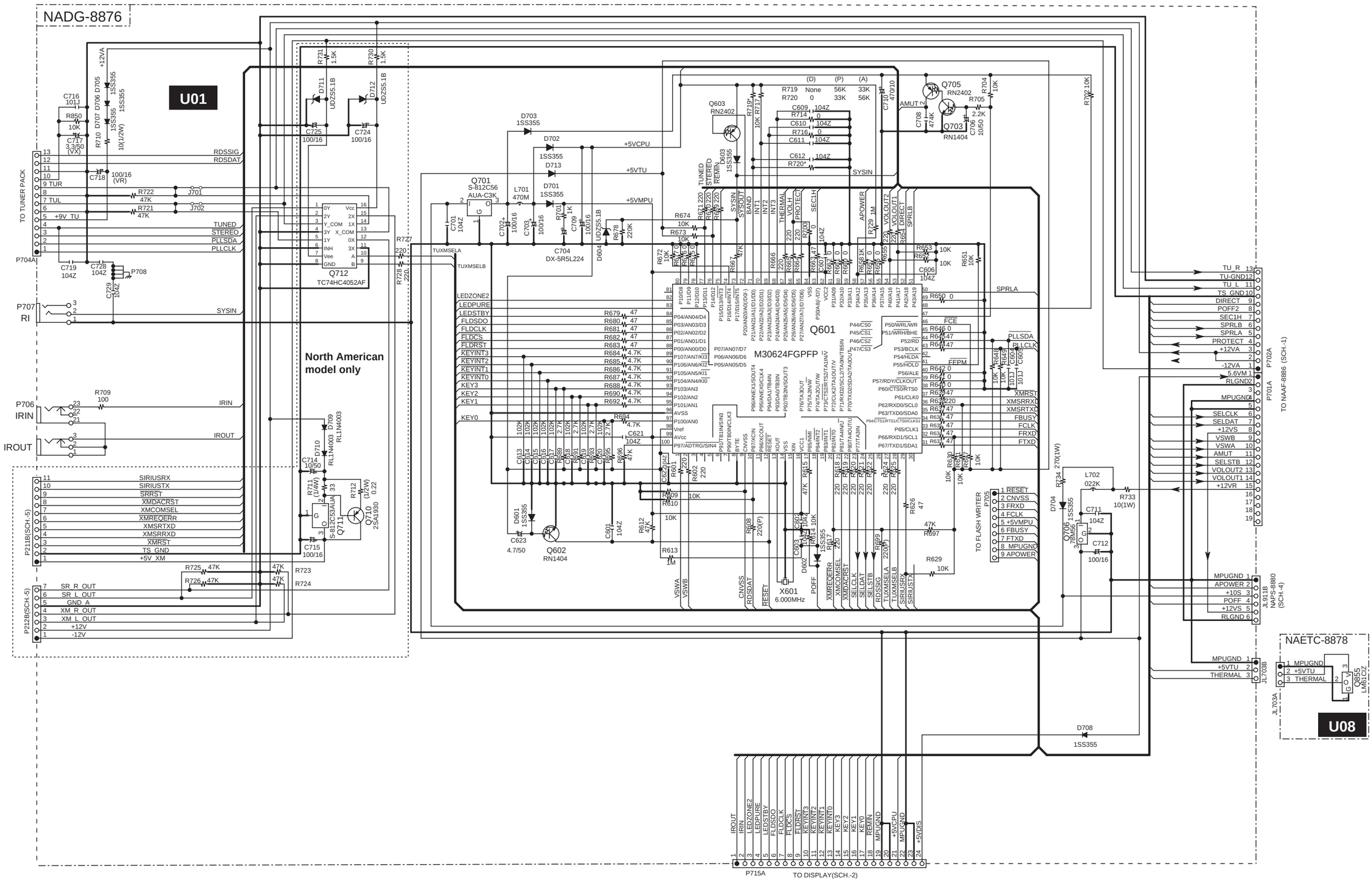

# SCHEMATIC DIAGRAM 4
## POWER SUPPLY SECTION

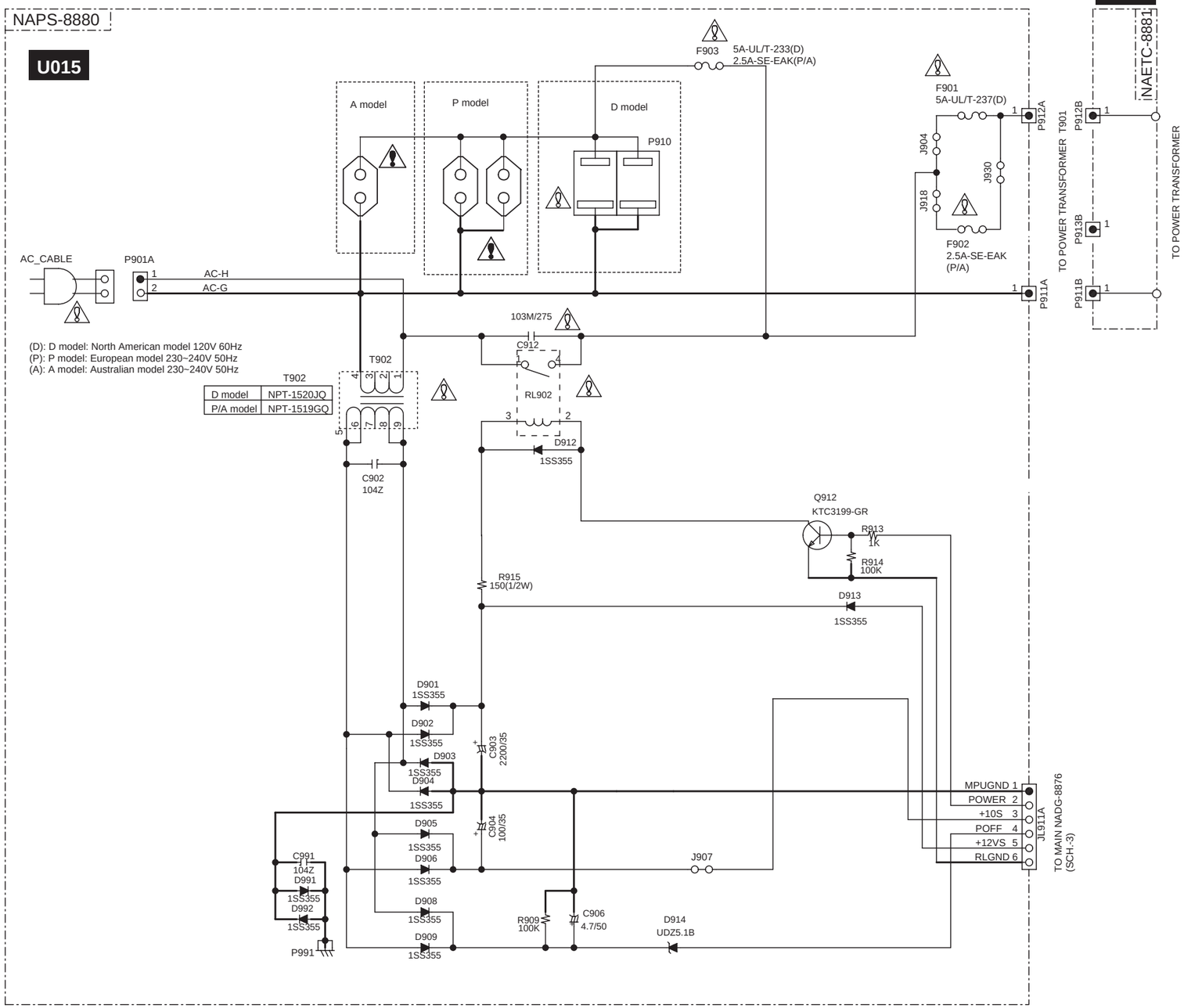


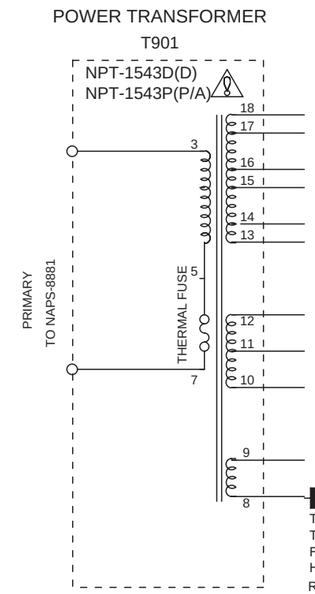


## CAUTION

FOR CONTINUED PROTECTION AGAINST FIRE HAZARD, REPLACE ONLY WITH FUSE OF SAME TYPE AND RATING INDICATED.

## ATTENTION

AFIN D'ASSURER UNE PROTECTION PERMANENTE CONTRE LES RISQUES D'INCENDIE, REMPLACER UNIQUEMENT PAR UN FUSIBLE DE MEME TYPE ET CALIBRATION COMME INDIQUE.

THIS SYMBOL LOCATED NEAR THE FUSE INDICATES THAT THE FUSE USED IS SLOW OPERATING TYPE FOR CONTINUED PROTECTION AGAINST FIRE HAZARD,REPLACE WITH SAME TYPE FUSE. FOR FUSE RATING REFER TO THE MARKING ADJACENT TO THE SYMBOL

CE SYMBOLE INDIQUE QUE LE FUSIBLE UTLISE EST E LENT. POUR UNE PROTECTION PERMANENTE,N'UTILISER QUE DES FUSIBLES DE MEME TYPE. CE DARNIER EST INDIQUE LA QU LE PRESENT SYMBOL EST APPOSE.

## NOTE

- THE COMPONENTS IDENTIFIED BY MARK ⚠ ARE CRITICAL FOR SAFETY REPLACE ONLY WITH PART NUMBER SPECIFIED.
- VOLTAGE(MEASURED WITH VOLTMETER) ⬭ IS DC VOLTAGE.(NO INPUT SIGNAL)
- ELECTROLYTIC CAPACITORS ( ) ARE IN uF/WV.
- ALL CAPACITORS ARE IN pF/50WV UNLESS OTHERWISE NOTED.
  EX) 030×3pF 330×33pF 331×330pF 333×0.033uF
- ALL RESISTORS ARE IN OHMS 1/4WATTS UNLESS OTHERWISE NOTED.
- THE THICK LINES ON PC BOARD ARE THE PRINTING SIDE OF THE PARTS.
  EX) ○ ○ ○ PRINTING SIDE
- CIRCUIT IS SUBJECT TO CHANGE FOR IMPROVEMENT.

# SCHEMATIC DIAGRAM 5

## XM RADIO SECTION(North American models only)

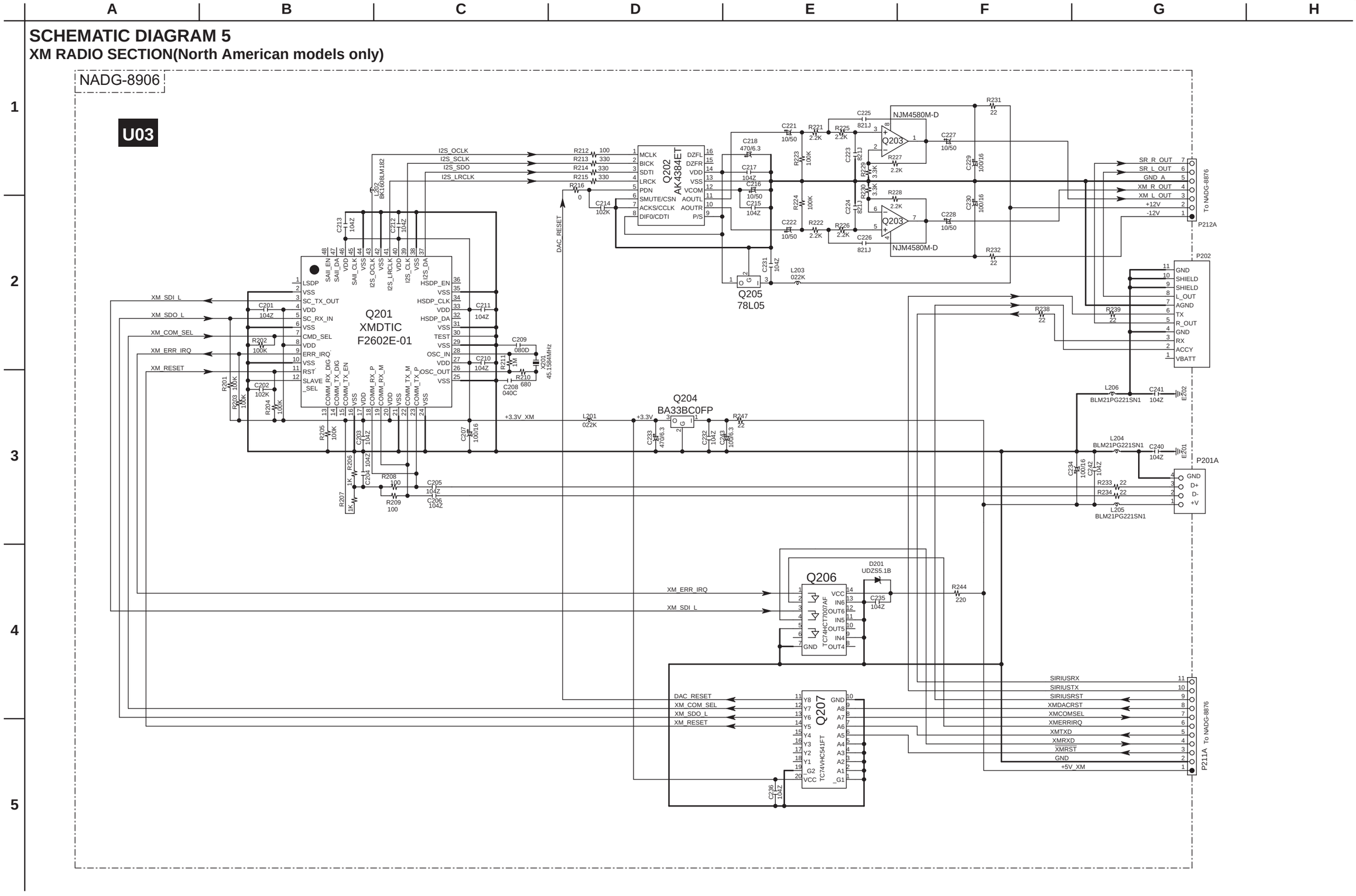

## WIRING VIEW

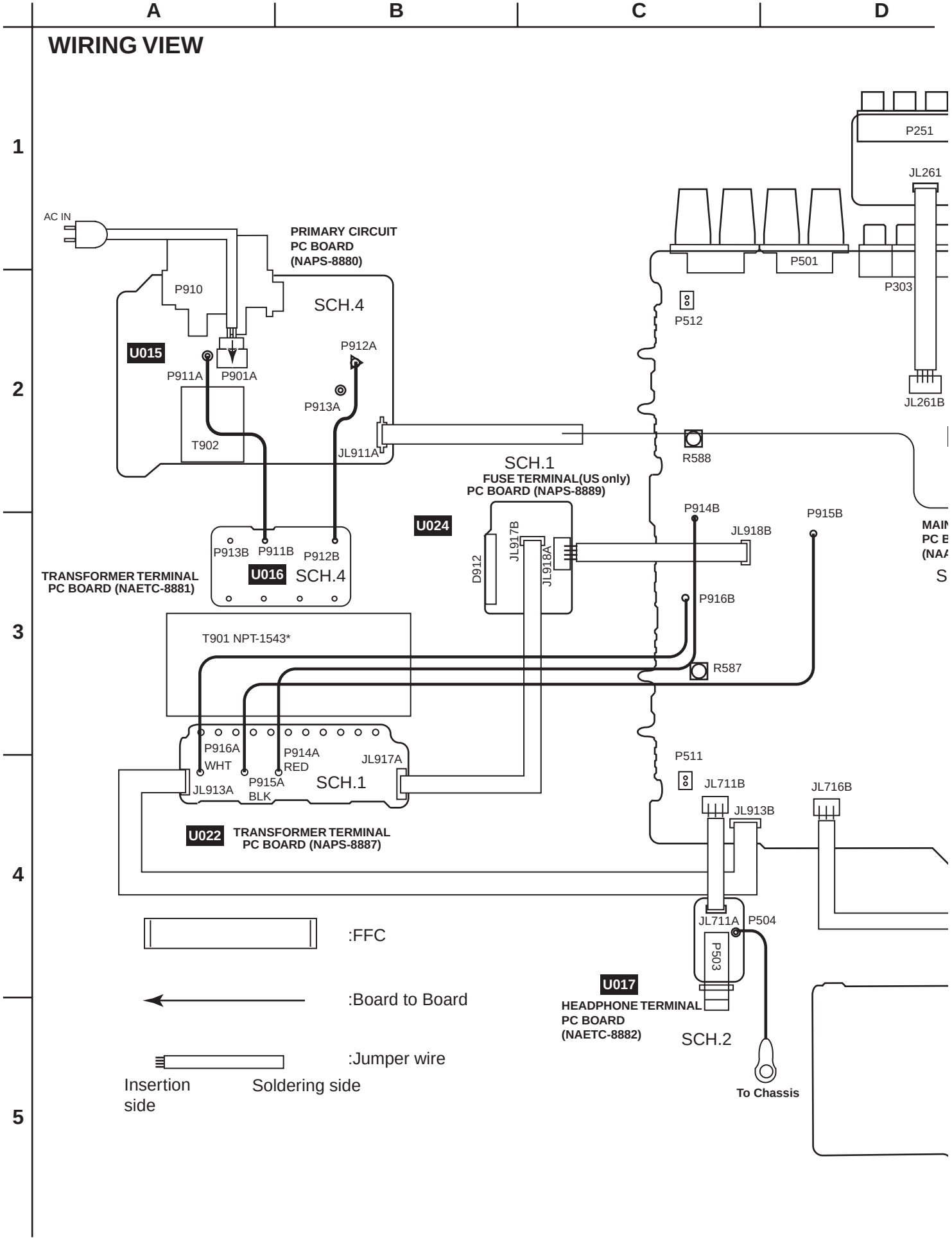
A
B
C
D
1
2
3
4
5
AC IN
PRIMARY CIRCUIT
PC BOARD
(NAPS-8880)
P910
SCH.4
U015
P911A
P901A
P912A
P913A
T902
JL911A
P251
JL261
P501
P303
P512
JL261B
R588
SCH.1
FUSE TERMINAL(US only)
PC BOARD (NAPS-8889)
U024
D912
JL917B
JL918A
P914B
JL918B
P915B
P916B
R587
P913B
P911B
P912B
U016
SCH.4
TRANSFORMER TERMINAL
PC BOARD (NAETC-8881)
T901 NPT-1543*
P916A
WHT
P914A
RED
P915A
BLK
JL913A
SCH.1
JL917A
U022
TRANSFORMER TERMINAL
PC BOARD (NAPS-8887)
P511
JL711B
JL913B
JL716B
JL711A
P504
P503
U017
HEADPHONE TERMINAL
PC BOARD
(NAETC-8882)
SCH.2
To Chassis
:FFC
:Board to Board
:Jumper wire
Insertion
side
Soldering side

## WIRING VIEW

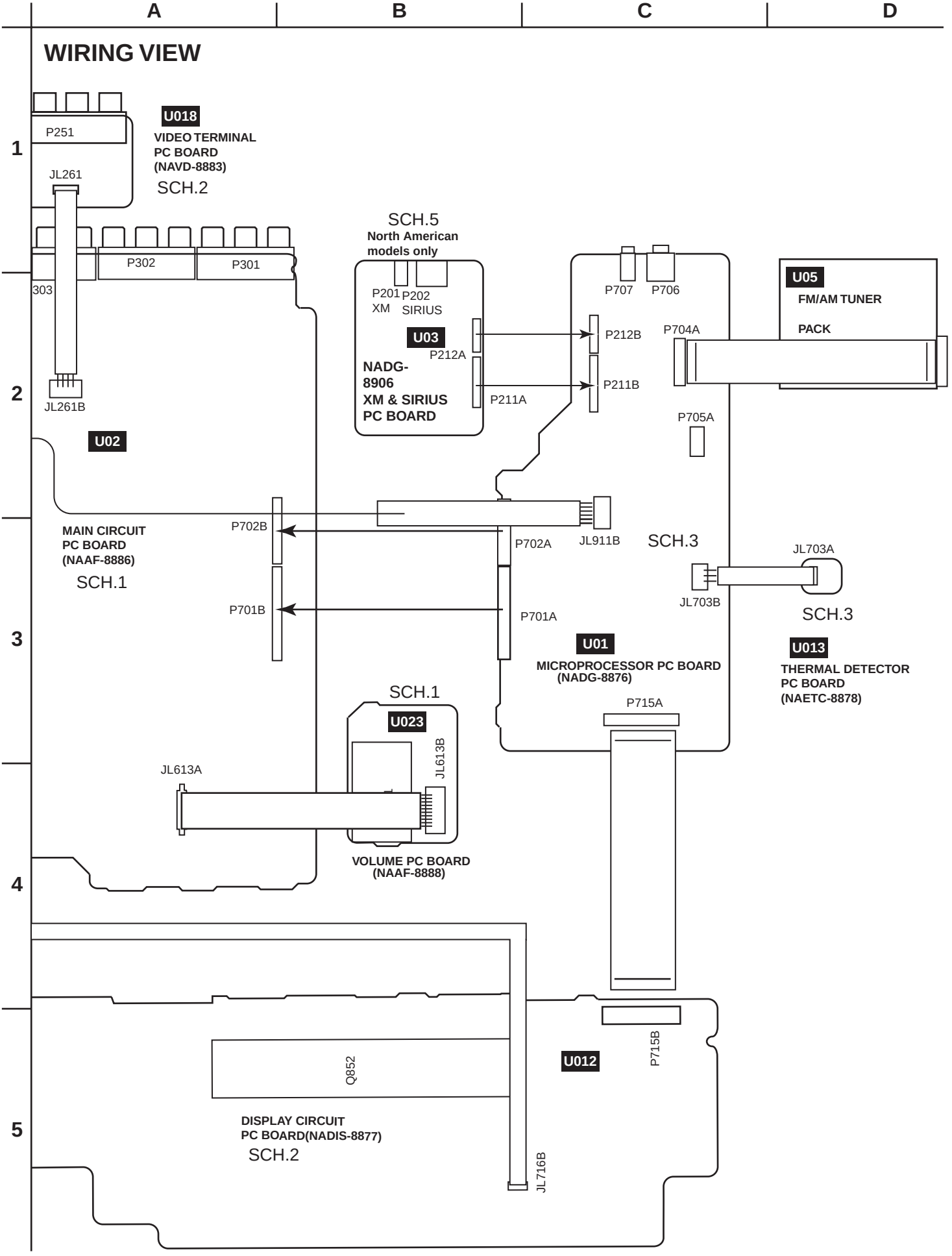
A
B
C
D
1
2
3
4
5
U018
VIDEO TERMINAL
PC BOARD
(NAVD-8883)
SCH.2
P251
JL261
P302
P301
303
JL261B
U02
SCH.5
North American
models only
P201
XM
P202
SIRIUS
U03
P212A
NADG-
8906
XM & SIRIUS
PC BOARD
P211A
P707
P706
P212B
P211B
P704A
P705A
U05
FM/AM TUNER
PACK
MAIN CIRCUIT
PC BOARD
(NAAF-8886)
SCH.1
P702B
P701B
P702A
JL911B
SCH.3
JL703A
JL703B
P701A
U01
MICROPROCESSOR PC BOARD
(NADG-8876)
SCH.3
U013
THERMAL DETECTOR
PC BOARD
(NAETC-8878)
SCH.1
U023
JL613B
JL613A
VOLUME PC BOARD
(NAAF-8888)
P715A
P715B
U012
Q852
DISPLAY CIRCUIT
PC BOARD(NADIS-8877)
SCH.2
JL716B

## PRINTED CIRCUIT BOARD VIEW 1

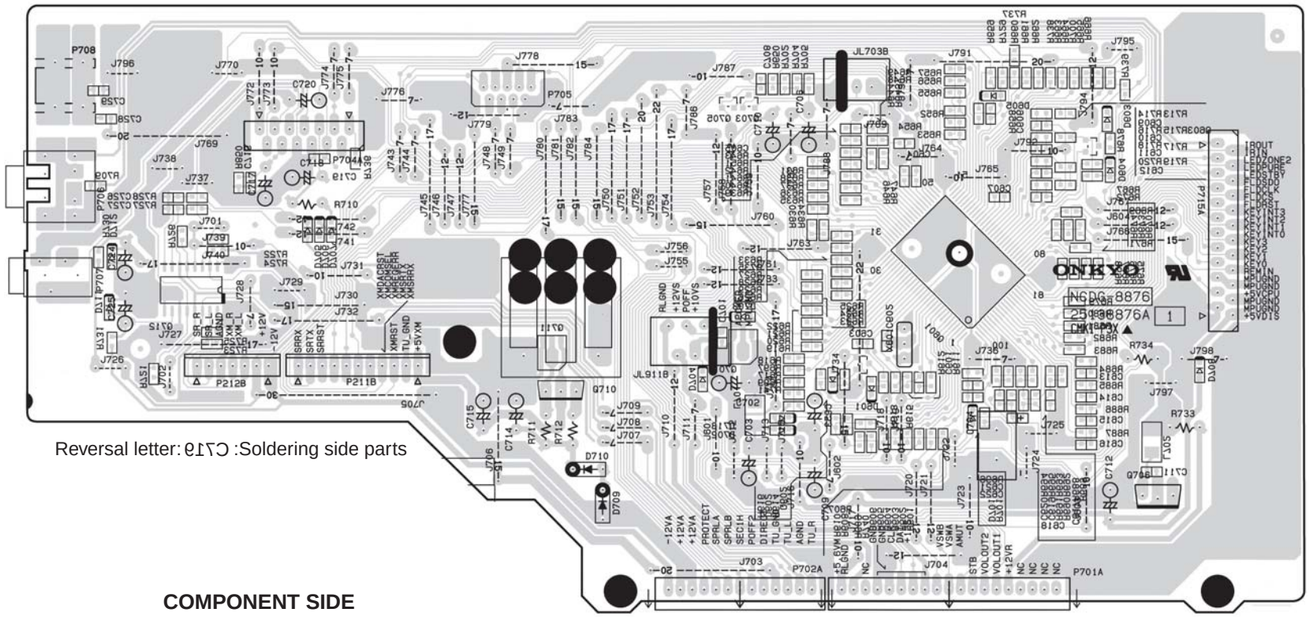

Reversal letter: C719 :Soldering side parts

COMPONENT SIDE

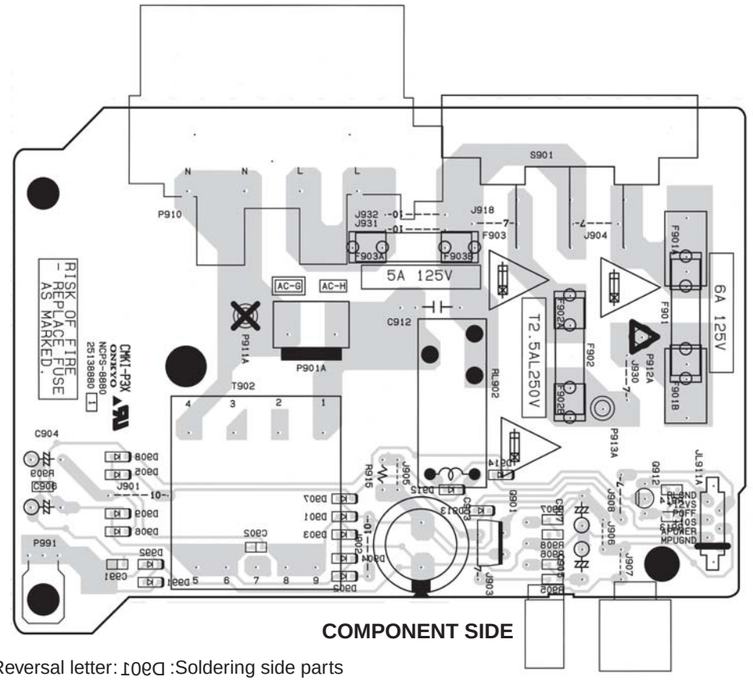

Reversal letter: D901 :Soldering side parts

COMPONENT SIDE

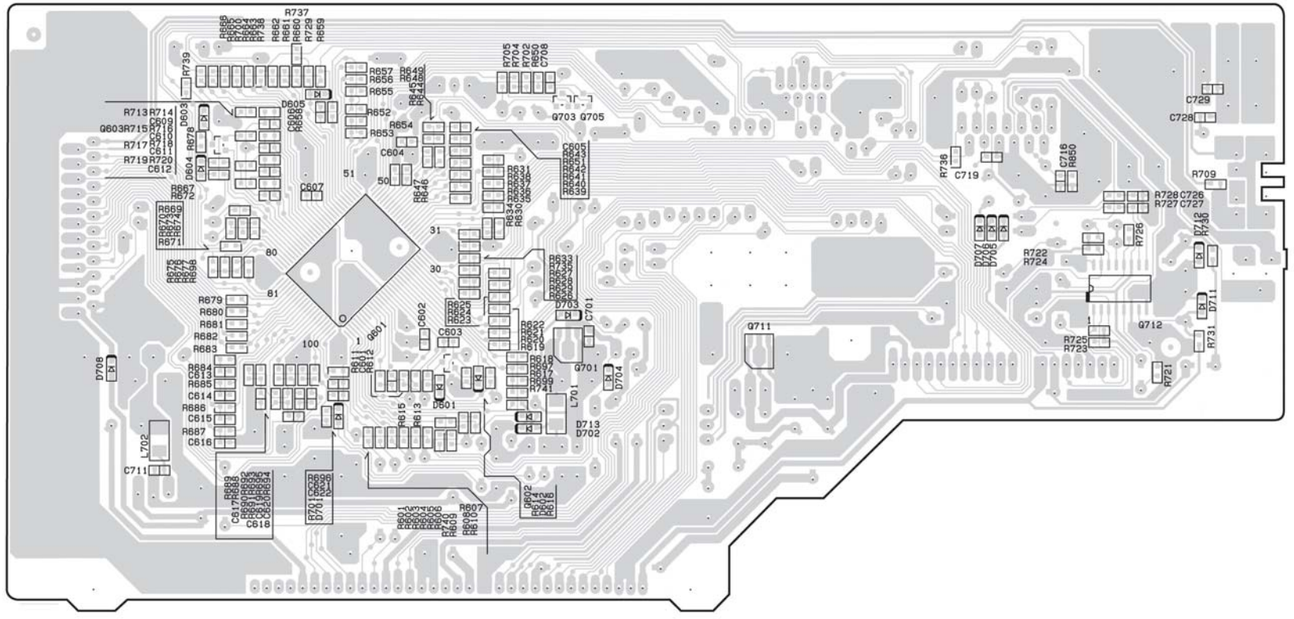

SOLDERING SIDE

**U01**

**MICROPROCESSOR PC BOARD (NADG-8876)**

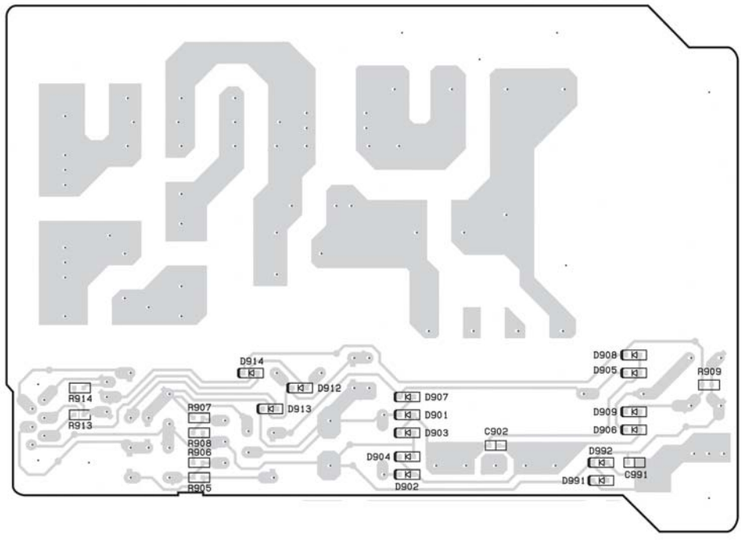

SOLDERING SIDE

**U015**

**PRIMARY CIRCUIT PC BOARD (NAPS-8880)**

## PRINTED CIRCUIT BOARD VIEW 2

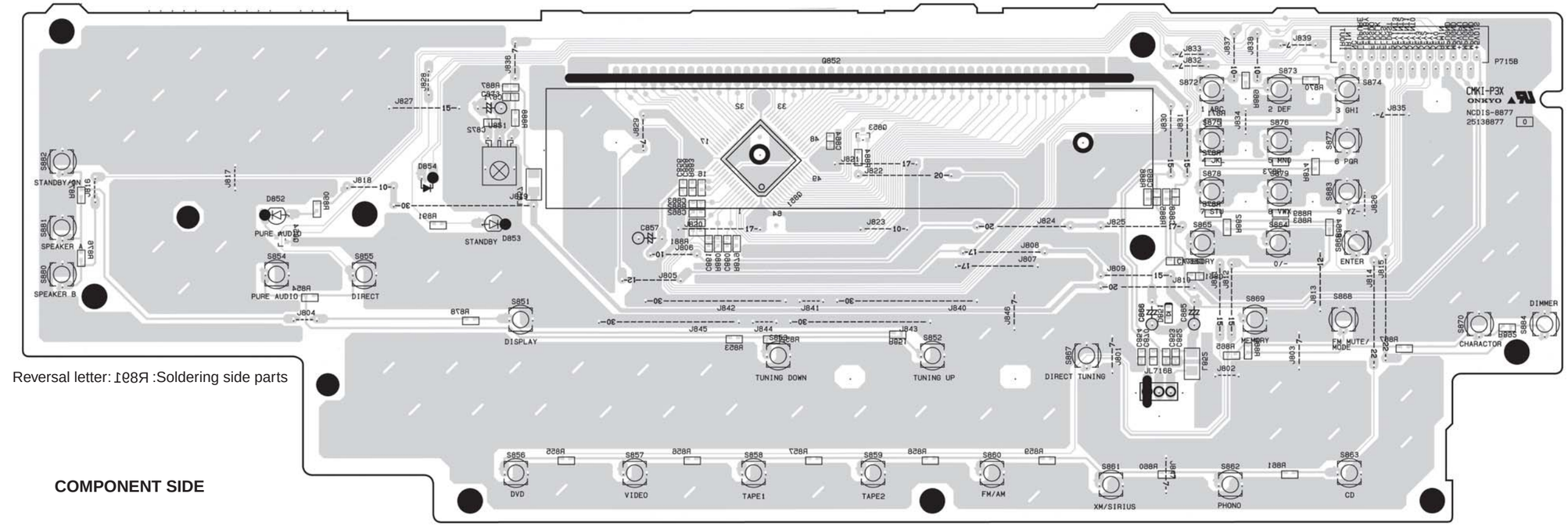


Reversal letter: R801 :Soldering side parts

**COMPONENT SIDE**

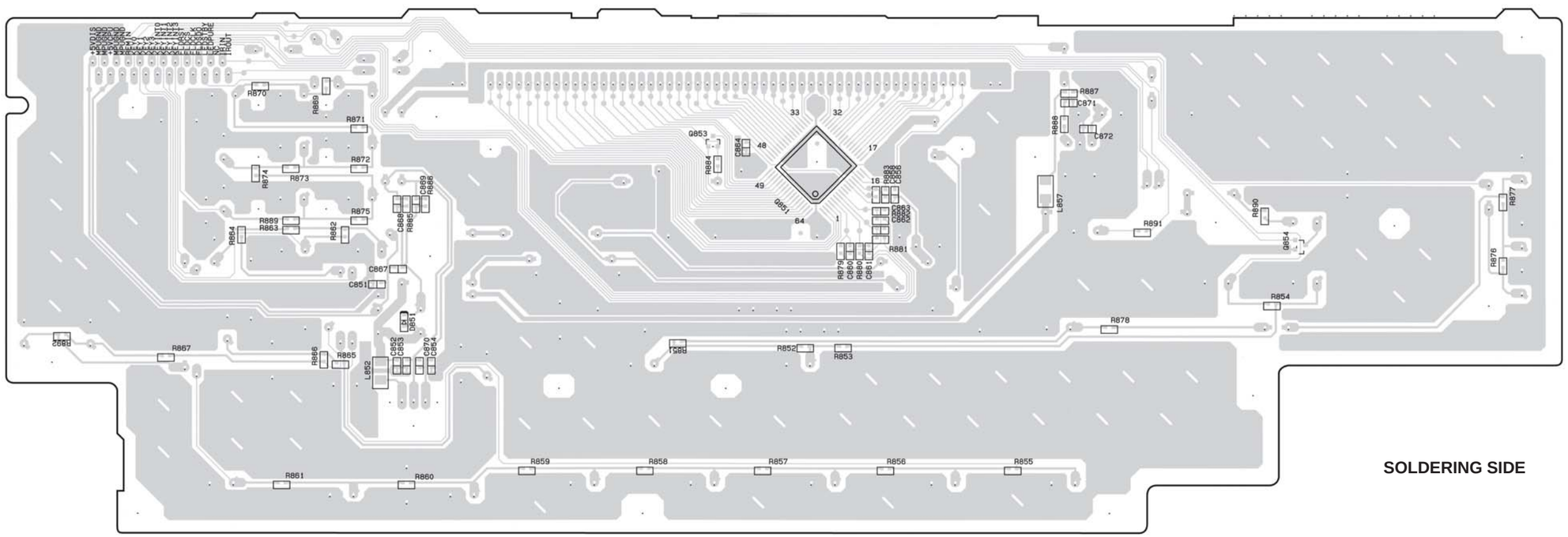

**SOLDERING SIDE**

**U012** **DISPLAY CIRCUIT PC BOARD (NADIS-8877)**

A B C D E F G H

1 2 3 4 5

## PRINTED CIRCUIT BOARD VIEW 3

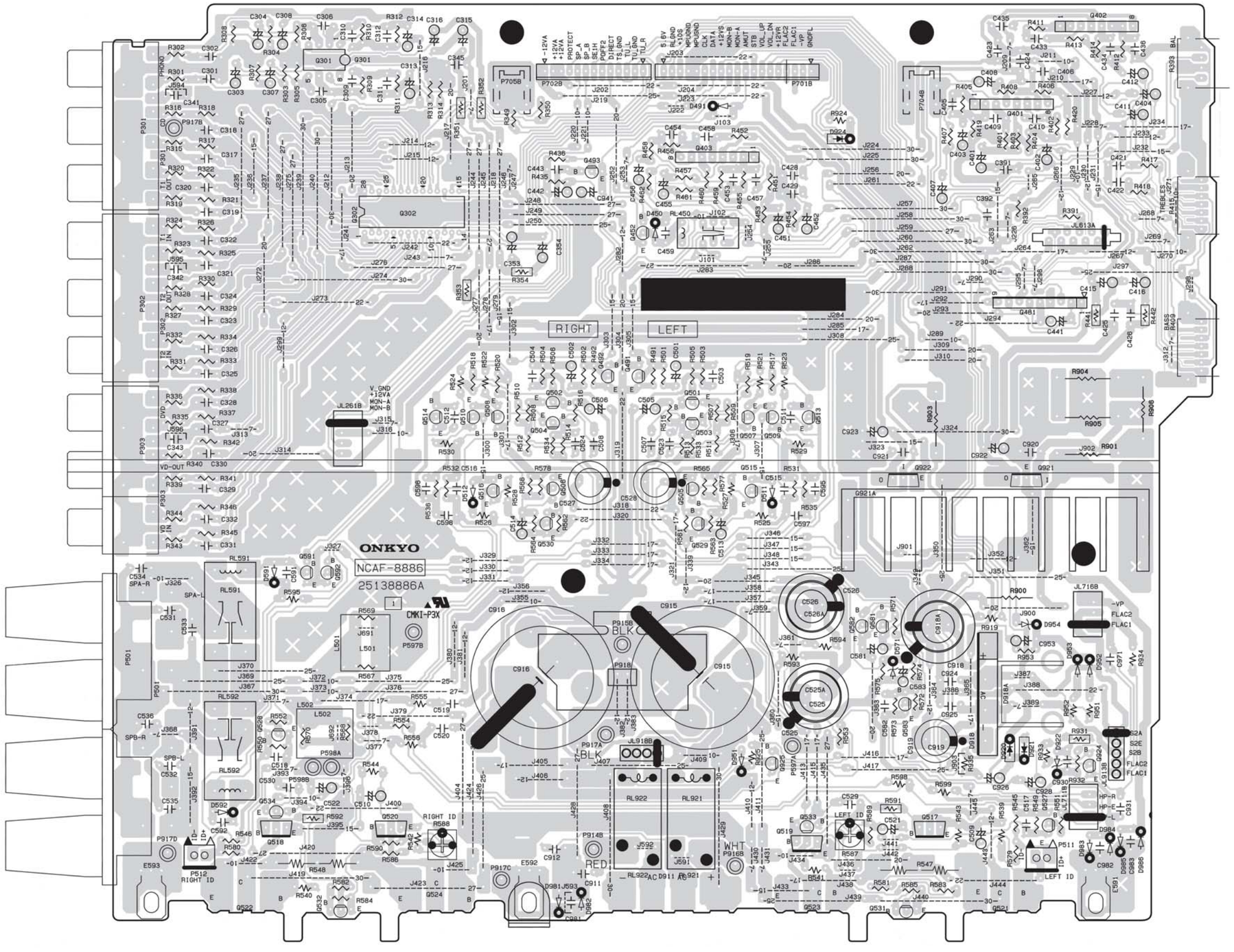


U02

MAIN CIRCUIT PC BOARD (NAAF-8886)

A B C D

1 2 3 4 5

# PRINTED CIRCUIT BOARD VIEW 4

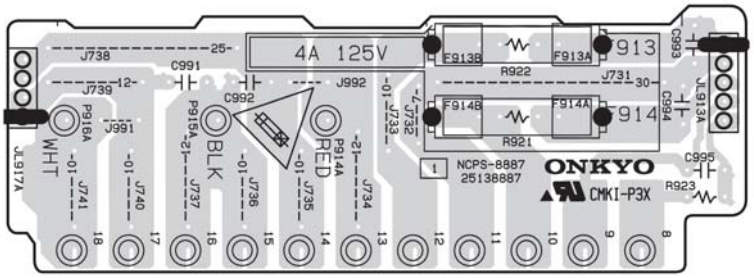


**U022** TRANSFORMER TERMINAL PC BOARD (NAPS-8887)

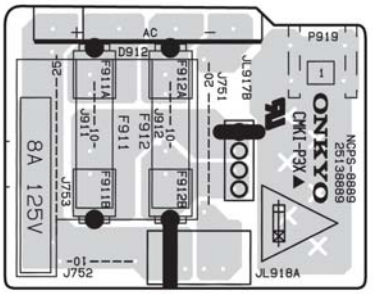


**U024** FUSE TERMINAL PC BOARD (NAPS-8889)

North American model only

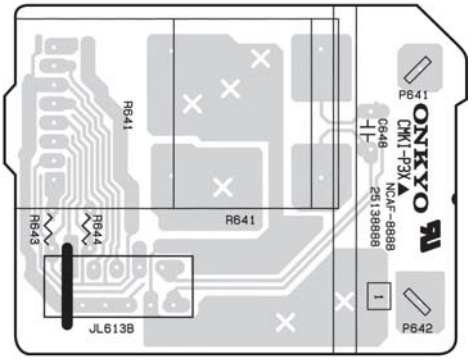


**U023** VOLUME PC BOARD (NAAF-8888)

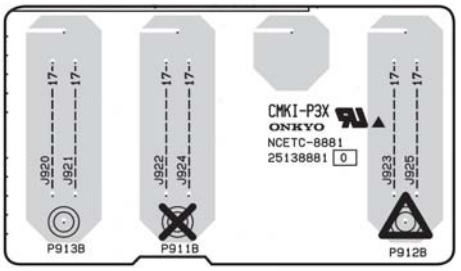


**U016** TRANSFORMER TERMINAL PC BOARD (NAETC-8881)

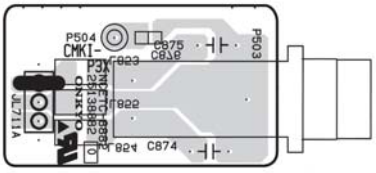


Reversal letter: D301 :Soldering side parts

COMPONENT SIDE

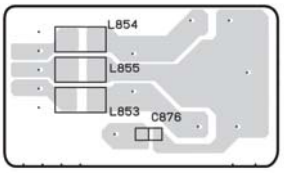


SOLDERING SIDE

**U017** HEADPHONE TERMINAL PC BOARD (NAETC-8882)

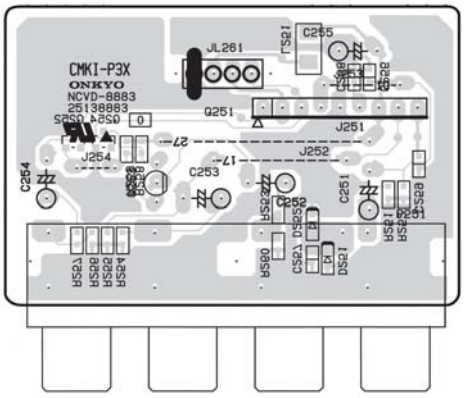


COMPONENT SIDE

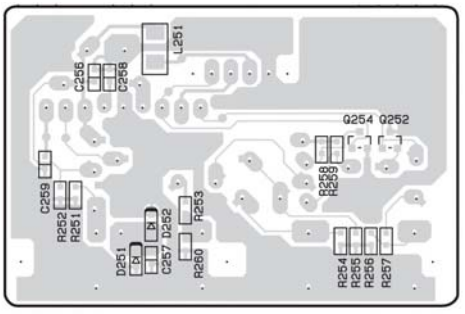


SOLDERING SIDE

**U018** VIDEO TERMINAL PC BOARD (NAVD-8883)

# IC BLOCK DIAGRAMS AND DESCRIPTIONS

## M66005-0001AFP(FL tube drive IC)

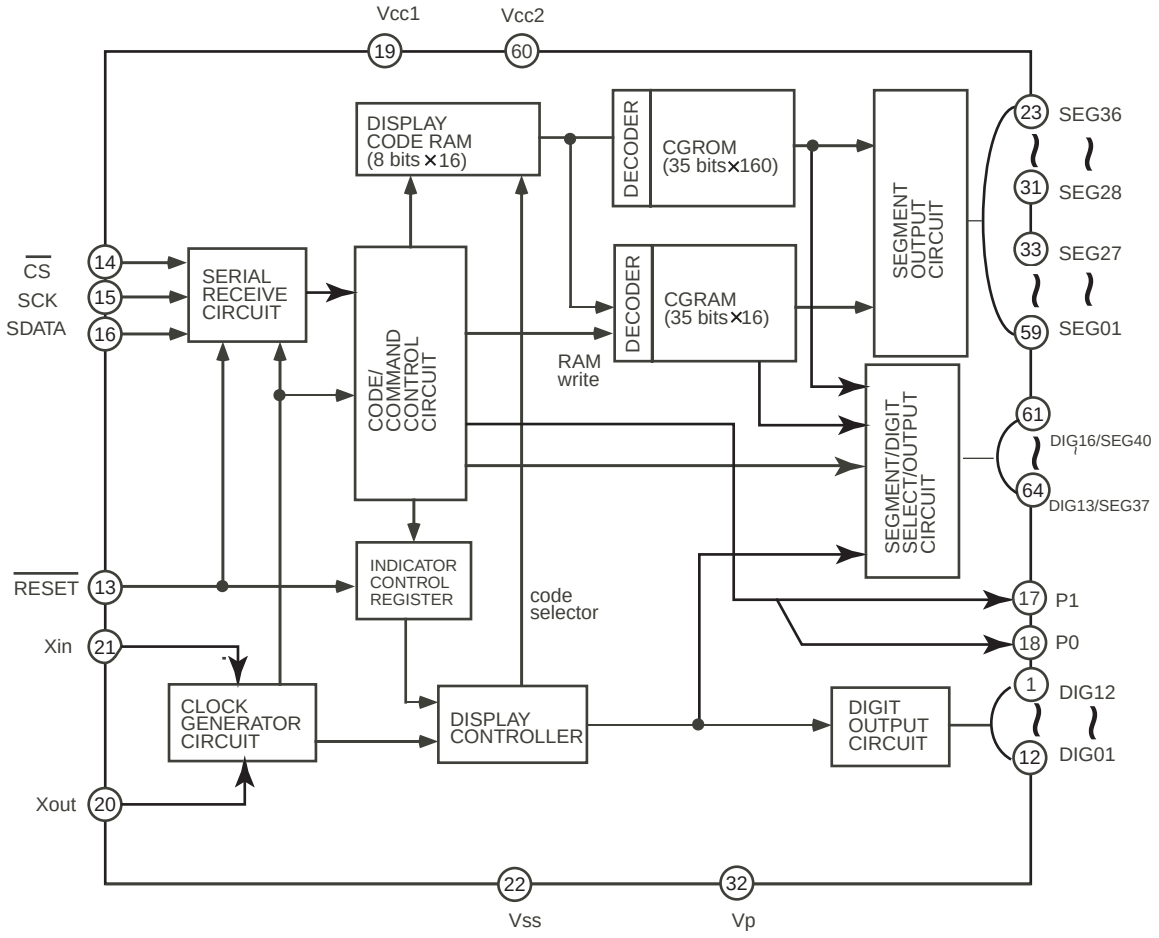


## LA7956(Video Switch)

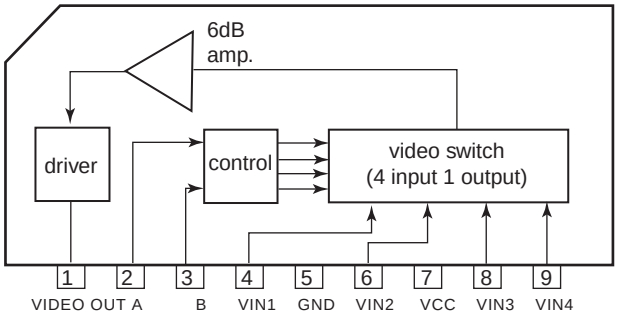


| S2 (2 pin) | S3 (3 pin) | VIN1 (4 pin) | VIN2 (6 pin) | VIN3 (8 pin) | VIN4 (9 pin) |
|---|---|---|---|---|---|
| H | H | ON | OFF | OFF | OFF |
| L | H | OFF | ON | OFF | OFF |
| H | L | OFF | OFF | ON | OFF |
| L | L | OFF | OFF | OFF | ON |

# IC BLOCK DIAGRAMS AND DESCRIPTIONS

## TA7291S(Volume motor driver)

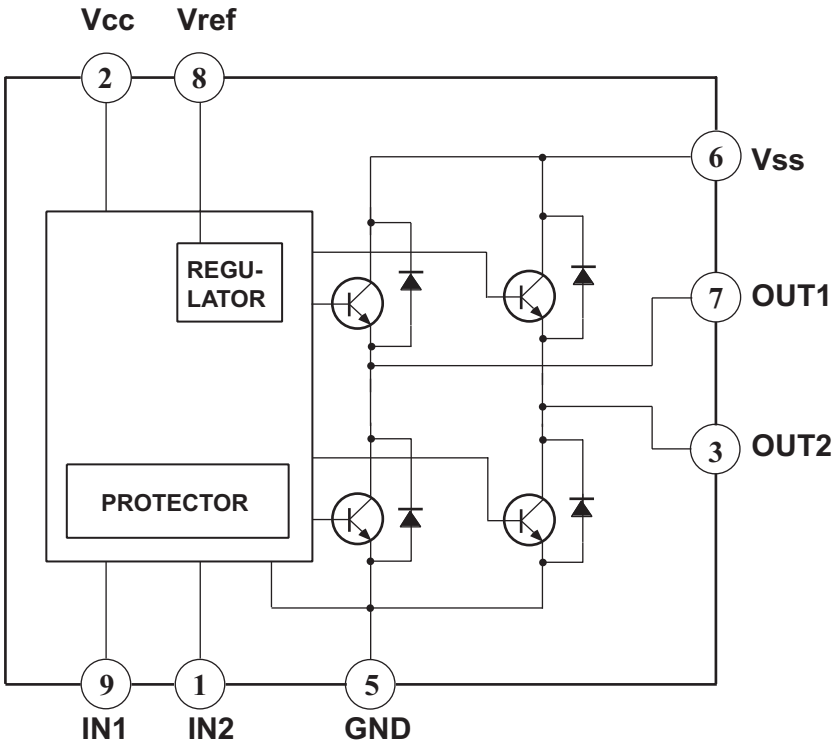


| INPUT | | OUTPUT | | MODE |
|---|---|---|---|---|
| IN1 | IN2 | OUT1 | OUT2 | |
| 0 | 0 | ∞ | ∞ | STOP |
| 1 | 0 | H | L | CW/CCW |
| 0 | 1 | L | H | CCW/CW |
| 1 | 1 | L | L | BRAKE |

CCW: Counter-clockwise
CW: Clockwise

## TC9273CNG(Analog Switch Array)

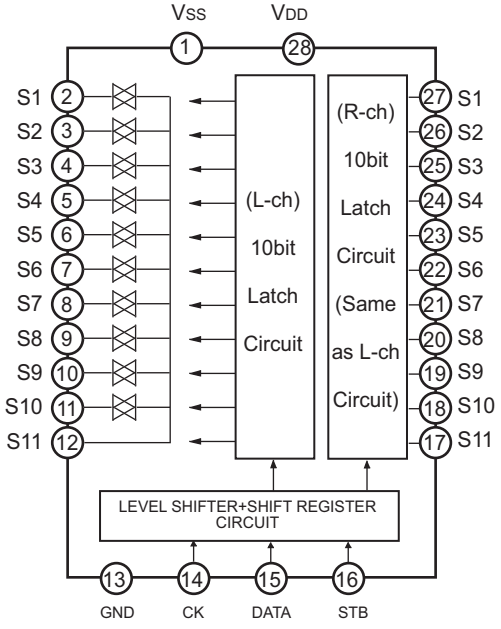


| Pin No. | Symbol | Description |
|---|---|---|
| 1 | Vss | Negative power supply pin |
| 13 | GND | Digital ground pin |
| 28 | VDD | Positive power supply pin |
| 2/27 | S1 | Input/Output pins |
| 3/26 | S2 | |
| 4/25 | S3 | |
| 5/24 | S4 | |
| 6/23 | S5 | |
| 7/22 | S6 | |
| 8/21 | S7 | |
| 9/20 | S8 | |
| 10/19 | S9 | |
| 11/18 | S10 | |
| 12/17 | S11 | |
| 14 | CK | Clock input pin for data transfer. |
| 15 | DATA | Serial data input pin for setting switches. |
| 16 | STB | Strobe input pin for data writing. |

## IC BLOCK DIAGRAMS AND DESCRIPTIONS

### AK4384(106dB 192kHz 24-Bit 2ch DAC )

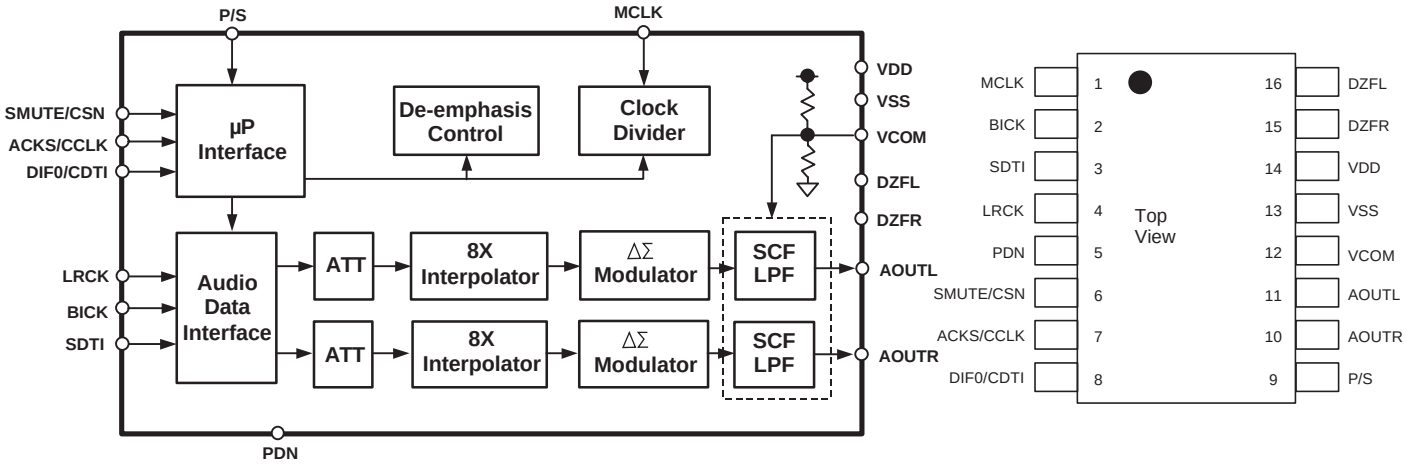


| No. | Pin Name | I/O | Function |
|---|---|---|---|
| 1 | MCLK | I | Master Clock Input Pin<br>An external TTL clock should be input on this pin. |
| 2 | BICK | I | Audio Serial Data Clock Pin |
| 3 | SDTI | I | Audio Serial Data Input Pin |
| 4 | LRCK | I | L/R Clock Pin |
| 5 | PDN | I | Power -Down Mode Pin<br>When at “L”, the AK4384 is in the power-down mode and is held in reset.<br>The AK4384 should always be reset upon power-up. |
| 6 | SMUTE | I | Soft Mute Pin in parallel mode<br>“H”: Enable,“L”: Disable |
| | CSN | I | Chip Select Pin in serial mode |
| 7 | ACKS | I | Auto Setting Mode Pin in parallel mode<br>“L”: Manual Setting Mode, “H”: Auto Setting Mode |
| | CCLK | I | Control Data Clock Pin in serial mode |
| 8 | DIF0 | I | Audio Data Interface Format Pin in parallel mode |
| | CDTI | I | Control Data Input Pin in serial mode |
| 9 | P/S | I | Parallel/Serial Select Pin (Internal pull-up pin)<br>“L”: Serial control mode,“H”: Parallel control mode |
| 10 | AOUTR | O | Rch Analog Output Pin |
| 11 | AOUTL | O | Lch Analog Output Pin |
| 12 | VCOM | O | Common Voltage Pin, VDD/2<br>Normally connected to VSS with a 0.1mF ceramic capacitor in parallel with a 10 m F electrolytic cap. |
| 13 | VSS | - | Ground Pin |
| 14 | VDD | - | Power Supply Pin |
| 15 | DZFR | O | Rch Data Zero Input Detect Pin |
| 16 | DZFL | O | Lch Data Zero Input Detect Pin |

## MICROPROCESSOR-CONNECTION DIAGRAM

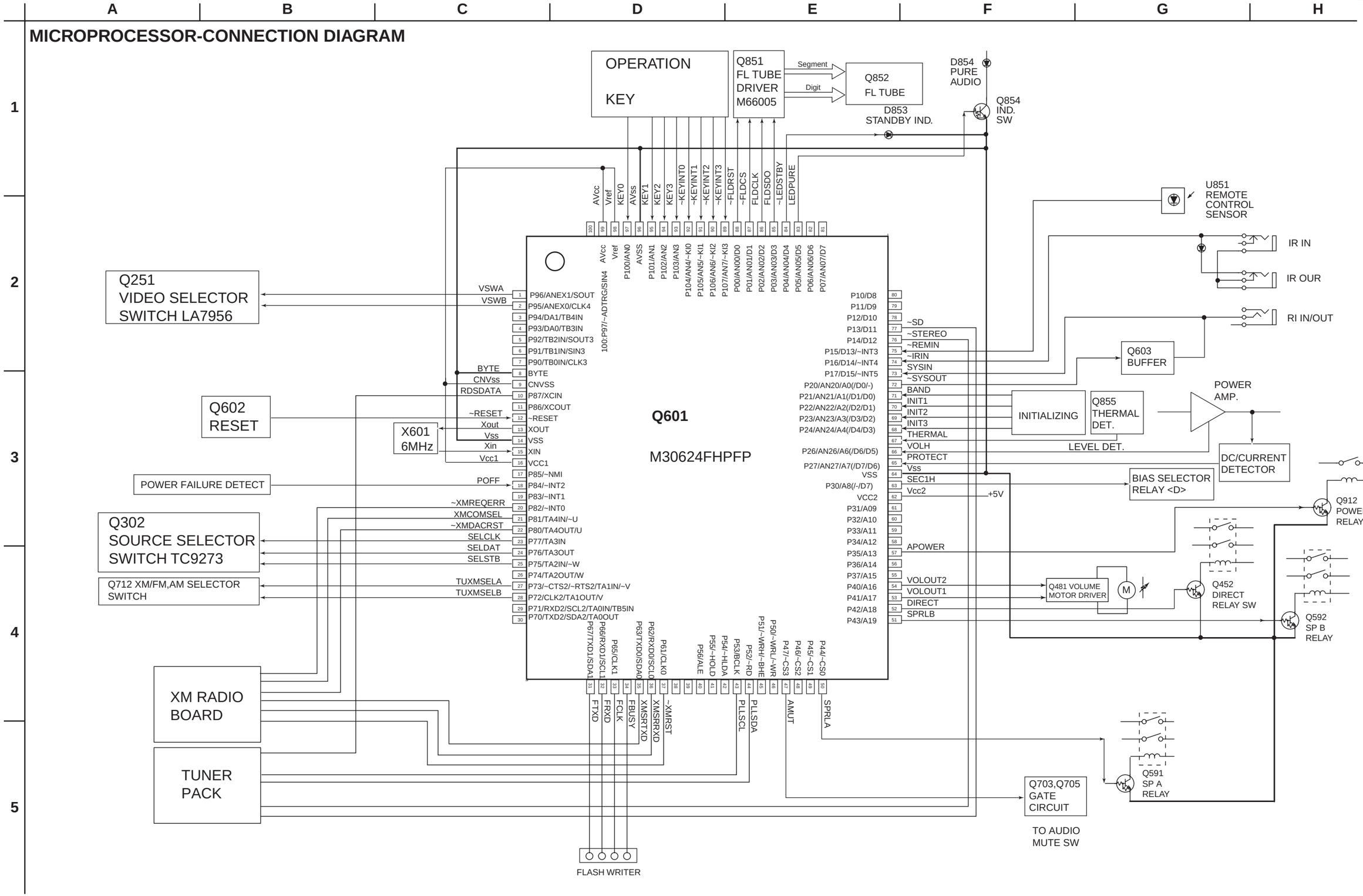

# MICROPROCESSOR-TERMINAL DESCRIPTION 1

| No. | Terminal | Signal Name | I/O | Act. | Description |
|---|---|---|---|---|---|
| 1 | P96/ANEX1/SOUT4 | VSWA | O | H | Video switch control output pin |
| 2 | P95/ANEX0/CLK4 | VSWB | O | H | Video switch control output pin |
| 3 | P94/DA1/TB4IN | | I | L | Not used. |
| 4 | P93/DA0/TB3IN | Z2SELCLK | O | L | Not used. |
| 5 | P92/TB2IN/SOUT3 | Z2SELDAT | O | H | Not used. |
| 6 | P91/TB1IN/SIN3 | Z2SELLAT | O | L | Not used. |
| 7 | P90/TB0IN/CLK3 | | I | L | Not used. |
| 8 | BYTE | BYTE | | | External bus select pin. Connect to Ground. |
| 9 | CNVSS | CNVss | | | Processor mode select pin |
| 10 | P87/XCIN | RDSDATA | I | H | RDS data input pin. European model only. |
| 11 | P86/XCOUT | | I | L | Not used. Connect to Ground. |
| 12 | ~RESET | ~RESET | I | L | System reset pin. |
| 13 | XOUT | Xout | | | Ceramic resonator connection pin. Connect a ceramic resonator 6.00MHz. |
| 14 | VSS | Vss | | | Ground pin. |
| 15 | XIN | Xin | | | Ceramic resonator connection pin. Connect a ceramic resonator 6.00MHz. |
| 16 | VCC1 | Vcc1 | | | Power supply pin. |
| 17 | P85/~NMI | ~NMI | I | L | Not used. |
| 18 | P84/~INT2 | POFF | I | L | Power failure detection pin |
| 19 | P83/~INT1 | | I | L | Not used. |
| 20 | P82/~INT0 | ~XMREQERR | I | L | XM IC interrupter detection pin. (North American model only)<br>RDS clock input pin. (European model only) |
| 21 | P81/TA4IN/~U | XMCOMSEL | O | H | XM IC control output pin (North America model only) |
| 22 | P80/TA4OUT/U | ~XMDACRST | O | L | XM DAC reset control pin. (North American model only) |
| 23 | P77/TA3IN | SELCLK | O | H | Input Selector clock output pin |
| 24 | P76/TA3OUT | SELDAT | O | H | Input Selector data output pin |
| 25 | P75/TA2IN/~W | SELSTB | O | H | Input Selector strobe output pin |
| 26 | P74/TA2OUT/W | SIRIUSRST | O | L | Reset control output pin for Sirius |
| 27 | P73/~CTS2/~RTS2/TA1IN/~V | TUXMSELA | O | H | Tuner and XM selector control output pin A |
| 28 | P72/CLK2/TA1OUT/V | TUXMSELB | O | H | Tuner and XM selector control output pin B |
| 29 | P71/RXD2/SCL2/TA0IN/TB5IN | SIRIUSRX | I | H | SIRIUS UART receiving pin. |
| 30 | P70/TXD2/SDA2/TA0OUT | SIRIUSTX | O | H | SIRIUS UART sending pin. |
| 31 | P67/TXD1/SDA1 | FTXD | O | H | Port for flash writer. |
| 32 | P66/RXD1/SCL1 | FRXD | I | H | Port for flash writer. |
| 33 | P65/CLK1 | FCLK | O | CLK | Port for flash writer. |
| 34 | P64/~CTS1/~RTS1/~CTS0/CLK | FBUSY | O | H | Port for flash writer. |
| 35 | P63/TXD0/SDA0 | XMSRTXD | O | H | Data sending pin for XM IC. |
| 36 | P62/RXD0/SCL0 | XMSRRXD | I | H | Data receiving pin for XM IC. |
| 37 | P61/CLK0 | ~XMRST | O | L | XM IC reset control pin. |
| 38 | P60/~CTS0/~RTS0 | | I | L | Not used. |
| 39 | P57/~RDY/CLKOUT | | I | L | Not used. |
| 40 | P56/ALE | | I | L | Not used. |
| 41 | P55/~HOLD | ~FEPM | I | H | Port for flash writer. |
| 42 | P54/~HLDA | | I | L | Not used. |
| 43 | P53/BCLK | PLLSCL | O | CLK | Clock output pin for tuner pack, |
| 44 | P52/~RD | PLLSDA | I/O | H | Data output pin for tuner pack. |
| 45 | P51/~WRH/~BHE | | I | L | Not used. |
| 46 | P50/~WRL/~WR | ~FCE | I | H | Port for flash writer. |
| 47 | P47/~CS3 | AMUT | O | H | Audio muting control output pin. |
| 48 | P46/~CS2 | Z2MUT | O | H | Not used. |
| 49 | P45/~CS1 | | I | L | Not used. |
| 50 | P44/~CS0 | SPRLA | O | H | Speaker relay A control output pin. |
| 51 | P43/A19 | SPRLB | O | H | Speaker relay B control output pin. |
| 52 | P42/A18 | DIRECT | O | H | Direct relay control output pin |
| 53 | P41/A17 | VOLOUT1 | O | H | Volume motor driver control output pin 1 |
| 54 | P40/A16 | VOLOUT2 | O | H | Volume motor driver control output pin 2 |
| 55 | P37/A15 | | I | L | Not used. |
| 56 | P36/A14 | | I | L | Not used. |
| 57 | P35/A13 | APOWER | O | H | Power supply control output pin. |
| 58 | P34/A12 | ~POFF2 | I | L | Not used. |
| 59 | P33/A11 | | I | L | Not used. |
| 60 | P32/A10 | | I | L | Not used. |

# MICROPROCESSOR-TERMINAL DESCRIPTION 2

| No. | Terminal | Signal Name | I/O | Act. | Description |
|---|---|---|---|---|---|
| 61 | P31/A09 | | I | L | Not used. |
| 62 | VCC2 | Vcc2 | | | Power supply pin. |
| 63 | P30/A8(/-/D7) | SEC1H | O | H | Bias selector control pin. (North American model only) |
| 64 | VSS | Vss | | | Ground pin. |
| 65 | P27/AN27/A7(/D7/D6) | PROTECT | I | H | Abnormal voltage and current detection input pin |
| 66 | P26/AN26/A6(/D6/D5) | VOLH | I | A/D | Output signal level detection pin |
| 67 | P25/AN25/A5(/D5/D4) | THERMAL | I | A/D | Thermal detection input pin. |
| 68 | P24/AN24/A4(/D4/D3) | INIT3 | I | A/D | Initializing input pin 3 |
| 69 | P23/AN23/A3(/D3/D2) | INIT2 | I | A/D | Initializing input pin 2 |
| 70 | P22/AN22/A2(/D2/D1) | INIT1 | I | A/D | Initializing input pin 1 |
| 71 | P21/AN21/A1(/D1/D0) | BAND | I | A/D | Band setting input pin |
| 72 | P20/AN20/A0(/D0/-) | ~SYSOUT | O | L | System code output pin |
| 73 | P17/D15/~INT5 | SYSIN | I | H | System code input pin |
| 74 | P16/D14/~INT4 | ~IRIN | I | L | IR signal input pin |
| 75 | P15/D13/~INT3 | ~REMIN | I | L | Signal input pin from remote controller. |
| 76 | P14/D12 | ~STEREO | I | L | FM stereo detection input pin |
| 77 | P13/D11 | ~SD | I | L | Broadcast detection input pin |
| 78 | P12/D10 | | I | L | Not used. |
| 79 | P11/D9 | | I | L | Not used. |
| 80 | P10/D8 | | I | L | Not used. |
| 81 | P07/AN07/D7 | | O | L | Not used. |
| 82 | P06/AN06/D6 | LEDZONE2 | O | H | Not used. |
| 83 | P05/AN05/D5 | LEDPURE | O | H | Pure Audio indicator control output pin |
| 84 | P04/AN04/D4 | ~LEDSTBY | O | L | STANDBY indicator control output pin |
| 85 | P03/AN03/D3 | FLDSDO | O | H | FL tube driver data output pin |
| 86 | P02/AN02/D2 | FLDCLK | O | CLK | FL tube driver clock output pin |
| 87 | P01/AN01/D1 | ~FLDCS | O | L | FL tube driver chip select output pin |
| 88 | P00/AN00/D0 | ~FLDRST | O | L | Reset signal output pin for FL tube driver |
| 89 | P107/AN7/~KI3 | ~KEYINT3 | I | L | Operation key interrupter input pin 3 |
| 90 | P106/AN6/~KI2 | ~KEYINT2 | I | L | Operation key interrupter input pin 2 |
| 91 | P105/AN5/~KI1 | ~KEYINT1 | I | L | Operation key interrupter input pin 1 |
| 92 | P104/AN4/~KI0 | ~KEYINT0 | I | L | Operation key interrupter input pin 0 |
| 93 | P103/AN3 | KEY3 | I | L | Operation key input pin 3 |
| 94 | P102/AN2 | KEY2 | I | A/D | Operation key input pin 2 |
| 95 | P101/AN1 | KEY1 | I | A/D | Operation key input pin 1 |
| 96 | AVSS | AVss | | | Ground pin. |
| 97 | P100/AN0 | KEY0 | I | A/D | Operation key input pin 0 |
| 98 | Vref | Vref | | | Reference voltage pin |
| 99 | AVcc | AVcc | | | Power supply pin. |
| 100 | P97/~ADTRG/SIN4 | | I | L | Not used. |

# ADJUSTMENT AND CONFIRMATION PROCEDURES 1

**Idling current adjustment**

Before Idling adjustment, turn the trimming resistors R587 and R588 to counter clockwise.
Connect the DC voltmeter to terminals P511 and P512.
After turn POWER to ON, adjust the trimming resistors R587 and R588 so that the reading of voltmeter becomes 2.5 mV.
After adjustment, attach the top cover.
Confirm the voltage of points above after about five minutes.
When less than 4.5 mV, readjust the resistors above so that the voltage becomes 4.5 mV.
When 4.5 mV to 5.5 mV, you are not necessary to adjust.
When more than 5.5 mV, readjust the resistors above so that the voltage becomes 5.5 mV.

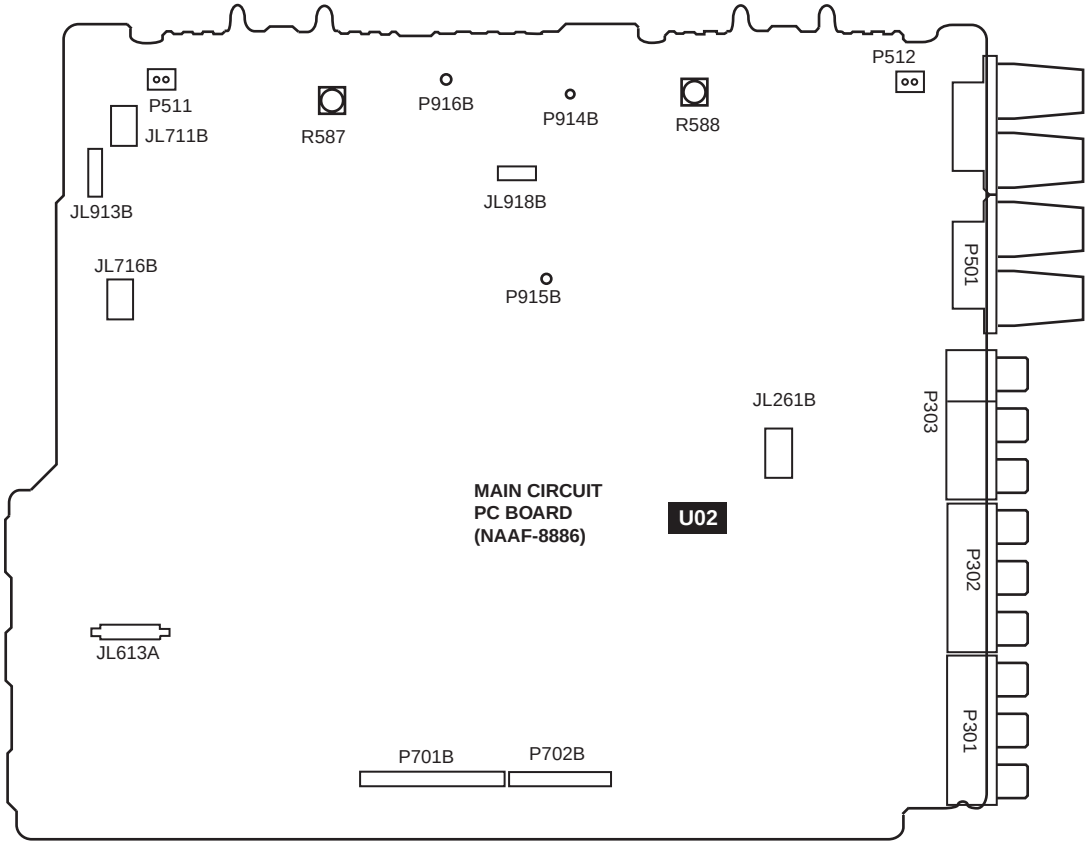


**Confirmation of protection circuit**

**1. Confirmation of operation of speaker relay**

Confirm that the speaker relays turn ON approximate. 5 seconds after the power switch is turned ON.
Confirm that the speaker relays turn OFF immediately after the power switch is turned OFF.

**2. Confirmation of DC detection circuit**

Press and hold down CD button, then press STANDBY/ON button.
After "Test- " on the FL tube light on, press DVD button to set the unit to "TEST-1 00".
Turn VOLUME to the maximum position. Apply DC 1.5 to 3V to CD terminal with no load.
Confirm that the speaker relay turns OFF.
Apply DC -1.5 to -3V to CD terminal with no load.
Confirm that the speaker relay turns OFF.
Caution: Don't apply DC voltage more than 1 sec..

# ADJUSTMENT AND CONFIRMATION PROCEDURES 2

**3. Confirmation of Current detection circuit**

Set the unit to "TEST-1-00".
Connect the differentiating circuit and apply the 50Hz square signal to CD terminal of each channel.
Adjust the attenuator or Volume so that the output level becomes 30V p-p.
Confirm that the speaker relay does not turn OFF when a 2.0 ohm load is connected.
Confirm that the speaker relay turns on when a 0.5 ohm load is connected.

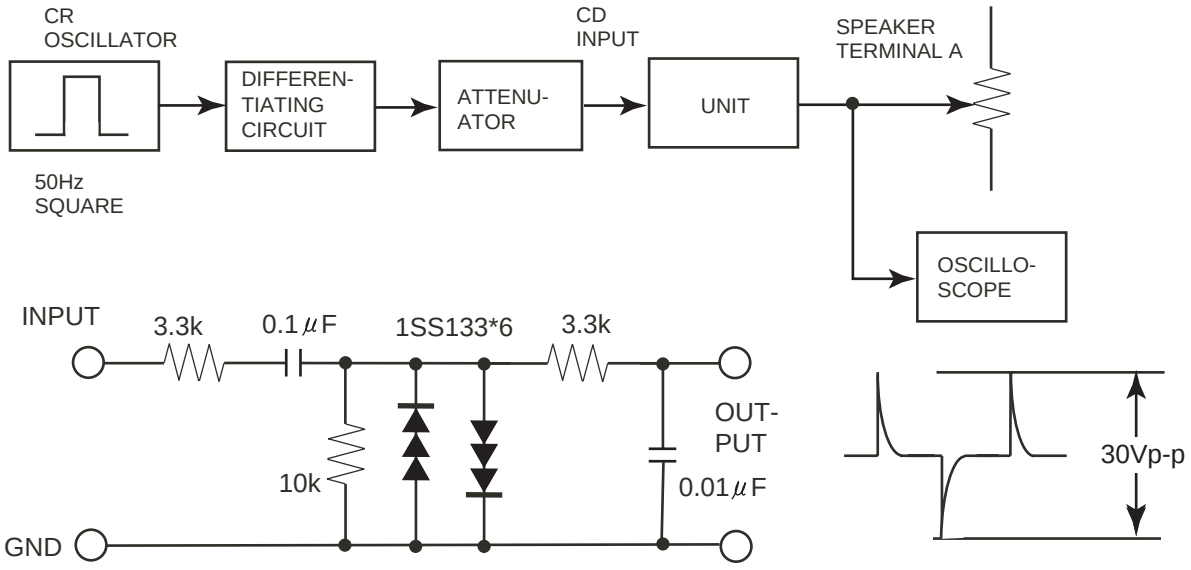


Differentiating Circuit

FL TEST MODE

1. Press and hold down CD button, then press STANDBY/ON button.
2. After "TEST-" on the FL tube is displayed, press CD button to set the unit to the test mode of FL tube.

Test mode of FL tube

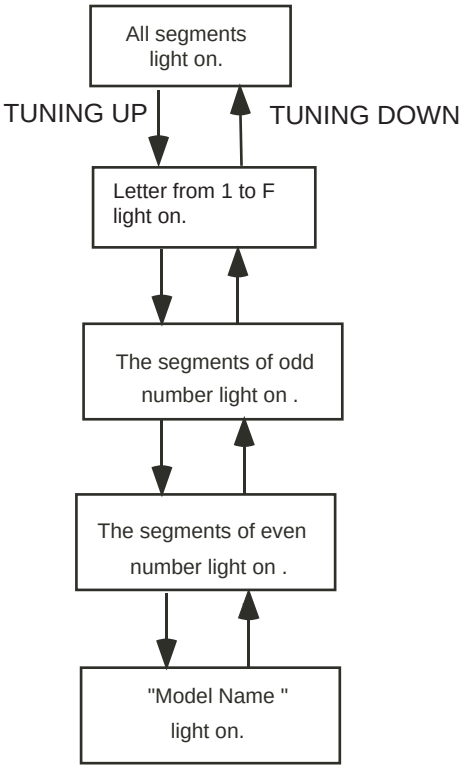


Confirmation of microprocessor version
Press and hold down DISPLAY button,
then press STANDBY/ON button.

Confirmation of thermal detector
Press and hold down DISPLAY button,
then press STANDBY/ON button.
During Microprocessor version is displayed,
press SPEAKER B button.

## PACKING VIEW

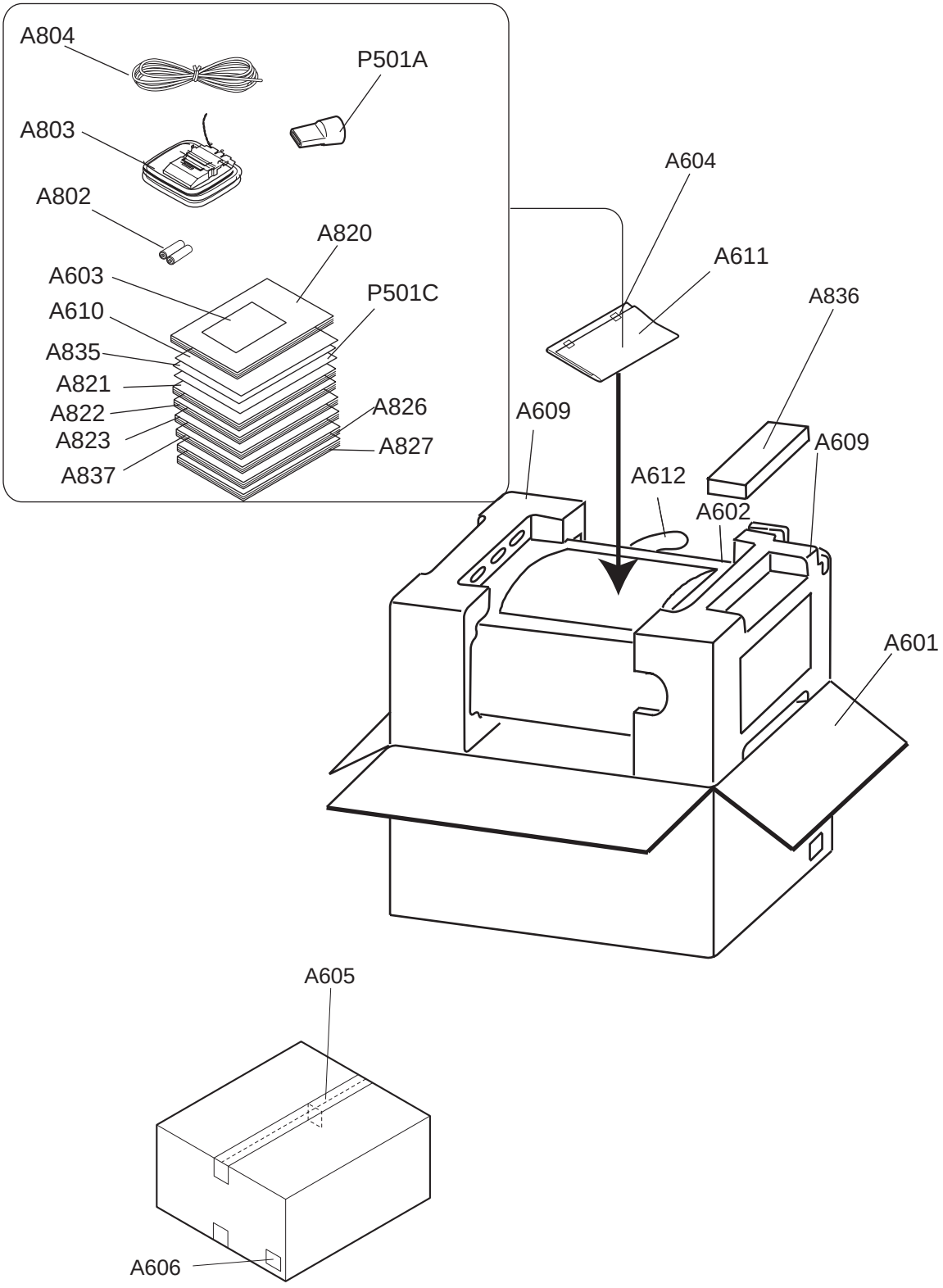

## EXPLODED VIEW-PARTS LIST

NOTE: THE COMPONENTS IDENTIFIED BY MARK ! ARE CRITICAL FOR RISK OF FIRE AND ELECTRIC SHOCK. REPLACE ONLY WITH PART NUMBER SPECIFIED.

CAUTION: Replacement for transistor of mark *, if necessary must be made from the same beta group (hFE) as the original type.

NOTE:
<B>: Black model
<S>: Silver model
<D>: USA model
<P>: European model
<A>: Australian model
<C>: Canadian model
NSP: No Spare Part

| REF. NO. | PART NAME | DESCRIPTION | PART NO. | REMARKS |
|---|---|---|---|---|
| A001 | F BRACKET | | 27110952 | <B> |
| | F BRACKET | | 27111418 | <S> |
| A002 | CUSHION | 180x5xt1 | 28141462 | |
| A003 | SCREW | 3TTB+8B(3CM)SR | 801637 | |
| A005 | HOLDER | KGLS-16RT | 27190511 | |
| A006 | CHASSIS | | 27100479 | NSP |
| A007 | HOLDER | | 27190991 | |
| A008 | SCREW | 4TTC+8C(3BC) | 830440089GR | |
| A009 | CUSHION | T4L20D10 | 28141566 | |
| A010 | HEAT SINK | 233 | 27160594 | |
| A011 | RETAINER | (HS-2) | 27141530A | |
| A014 | RETAINER | | 27141671 | |
| A018 | SCREW | 3SMS8W.SW+14B(CU) | 801634 | |
| A023 | BUSHING | S-RELIEF #2271 | 27300750 | ! |
| A028 | HOLDER | KGLS-12RT | 27190266 | |
| A201 | COVER | | 28184964 | <B> |
| | COVER | | 28184965 | <S> |
| A202 | SCREW | 3TTB+8B(3BC) | 838430088GR | <B> |
| | SCREW | 3TTB+8B(3CM) | 838130088GR | <S> |
| A203 | IB CUSHION | W15*3t TAPE | 28141585 | |
| A205 | BOTTOM LEG | | 27175432B | |
| A206 | CUSHION | | 28141664 | |
| A210 | KNOB | (VOL) | 28325456 | <B> |
| | KNOB | (VOL) | 28326349 | <S> |
| A212 | KNOB | (TONE) | 28325454 | <B> |
| | KNOB | (TONE) | 28326350 | <S> |
| A214 | DECO FRM | | 27215379 | <B> |
| | DECO FRM | | 27215380 | <S> |
| A216 | FACET | | 28198778 | |

| | | | | |
|---|---|---|---|---|
| A218 | TAPE | TAPE(CLOTH-16U) | 29110083 | |
| A219 | TAPE | TAPE(CLOTH-8U) | 29110082 | |
| A220 | SPACER | | 27270472 | |
| A300 | REAR PANEL | | 27123567A | <D/C> |
| | REAR PANEL | | 27123569A | <A> |
| | REAR PANEL | | 27123568A | <P> |
| A301 | SCREW | 3TTB+8B(3BC) | 838430088GR | |
| A302 | WASHER | W3*10F(3BC) | 87643010GR | |
| A350 | F PANEL | | 27212912A | <D/C> |
| | F PANEL | | 27212915 | <A> |
| | F PANEL | | 27212913 | <B> <P> |
| | F PANEL | | 27212914 | <S> <P> |
| A351 | SCREW | 3TTB+8B(3BC) | 838430088GR | |
| A352 | BADGE | | 28135244 | <B> |
| | BADGE | | 28135298 | <S> |
| A355 | CLEAR PLT | | 28192095A | <D/C> |
| | CLEAR PLT | | 28192101A | <A> |
| | CLEAR PLT | | 28192096A | <B> <P> |
| | CLEAR PLT | | 28192097A | <S> <P> |
| A360 | SCREW | 3SMS8W.SW+14B(CU) | 801634 | <D/C> |
| A361 | SCREW | 3TTB+8B(3CM)SR | 801637 | <D/C> |
| A607 | LABEL | HOOKUP-ONKYO | 29363194 | <D/C> |
| A811 | CLIP | CS-1U | 27255004 | |
| D911 | DIODE | D10XB60H | 22380337 | |
| E801 | WIRE TIE | BSK-1 | 260208 | |
| F901 | FUSE | 6A-UL/T-233 or | 252327GR or | ! <D/C> |
| | FUSE | 6A-T/UL-ST2 | 252259GR | ! <D/C> |
| F902 | FUSE | 2.5A-SE-EAK or | 252075GR or | ! <P/A> |
| | FUSE | 2.5A-SE-TL250V | 252275GR | ! <P/A> |
| F903 | FUSE | 5A-UL/T-233 or | 252326GR or | ! <D/C> |
| | FUSE | 5A-T/UL-ST2 | 252258GR | ! <D/C> |
| | FUSE | 2.5A-SE-EAK or | 252075GR or | ! <P/A> |
| | FUSE | 2.5A-SE-TL250V | 252275GR | ! <P/A> |
| F911,F912 | FUSE | 8A-UL/T-233 or | 252329GR or | ! <D/C> |
| | FUSE | 8A-T/UL-ST2 | 252261GR | ! <D/C> |
| F913,F914 | FUSE | 4A-UL/T-233 or | 252325GR or | ! <D/C> |
| | FUSE | 4A-T/UL-ST2 | 252257GR | ! <D/C> |
| P501B | P RIVET | JB-407A-C | 880052 | <P/A> |
| P704 | FFC | NCFC7-131012 | 2047131012 | |
| P715 | FFC | NCFC7-242012 | 2047242012 | |

| | | | | |
|---|---|---|---|---|
| P901 | AC CORD | AS-UC-2 or | 253368LTK or | ! <D/C> |
| | AC CORD | AS-UC-2 or | 253368YUN or | ! <D/C> |
| | AC CORD | AS-UC-2 | 253333VOL | ! <D/C> |
| | AC CORD | AS-SAA | 253388LTK | ! <A> |
| | AC CORD | AS-CEE-2 or | 253306VOL or | ! <P> |
| | AC CORD | AS-CEE-2 or | 253374LTK or | ! <P> |
| | AC CORD | AS-CEE-2 | 253374YUN | ! <P> |
| Q521,Q522 | TR | 2SC5200-O or | 2202823 or | * |
| | TR | 2SC5200-R | 2202822 | * |
| Q521A | ISO SHEET | AC262 | 223025 | |
| Q523,Q524 | TR | 2SA1943-O or | 2202813 or | * |
| | TR | 2SA1943-R | 2202812 | * |
| T901 | P TRANS | NPT-1543D | 2301867 | ! <D/C> |
| | P TRANS | NPT-1543P | 2301868 | ! <P/A> |
| U01 | Microprocessor PCB AS | NADG-8876-1A | 1B144576-1A | <D/C> |
| | Microprocessor PCB AS | NADG-8876-1B | 1B144576-1B | <P> |
| | Microprocessor PCB AS | NADG-8876-1C | 1B144576-1C | <A> |
| U012 | Display circuit PCB AS | NADIS-8877-1A | 1B144577-1A | <D/C> |
| | Display circuit PCB AS | NADIS-8877-1B | 1B144577-1B | <P> |
| | Display circuit PCB AS | NADIS-8877-1C | 1B144577-1C | <A> |
| U013 | Thermal detector PCB AS | NAETC-8878-1A | 1B144578-1A | <D/C> |
| | Thermal detector PCB AS | NAETC-8878-1B | 1B144578-1B | <P> |
| | Thermal detector PCB AS | NAETC-8878-1C | 1B144578-1C | <A> |
| U014 | Holder PCB | NAETC-8879-1A | 1B144579-1A | <D/C> |
| | Holder PCB | NAETC-8879-1B | 1B144579-1B | <P> |
| | Holder PCB | NAETC-8879-1C | 1B144579-1C | <A> |
| U015 | Primary circuit PCB AS | NAPS-8880-1A | 1B144580-1A | <D/C> |
| | Primary circuit PCB AS | NAPS-8880-1B | 1B144580-1B | <P> |
| | Primary circuit PCB AS | NAPS-8880-1C | 1B144580-1C | <A> |
| U016 | Transformer terminal PCB AS | NAETC-8881-1A | 1B144581-1A | <D/C> |
| | Transformer terminal PCB AS | NAETC-8881-1B | 1B144581-1B | <P> |
| | Transformer terminal PCB AS | NAETC-8881-1C | 1B144581-1C | <A> |
| U017 | Headphone terminal PCB AS | NAETC-8882-1A | 1B144582-1A | <D/C> |
| | Headphone terminal PCB AS | NAETC-8882-1B | 1B144582-1B | <P> |
| | Headphone terminal PCB AS | NAETC-8882-1C | 1B144582-1C | <A> |
| U018 | Video terminal PCB AS | NAVD-8883-1A | 1B144583-1A | <D/C> |
| | Video terminal PCB AS | NAVD-8883-1B | 1B144583-1B | <P> |
| | Video terminal PCB AS | NAVD-8883-1C | 1B144583-1C | <A> |
| U02 | Main circuit PCB AS | NAAF-8886-1A | 1B144586-1A | <D/C> |
| | Main circuit PCB AS | NAAF-8886-1B | 1B144586-1B | <P/A> |

| | | | | |
|---|---|---|---|---|
| U022 | Transformer terminal PCB AS | NAPS-8887-1A | 1B144587-1A | <D/C> |
| | Transformer terminal PCB AS | NAPS-8887-1B | 1B144587-1B | <P/A> |
| U023 | Volume PCB AS | NAAF-8888-1A | 1B144588-1A | <D/C> |
| | Volume PCB AS | NAAF-8888-1B | 1B144588-1B | <P/A> |
| U024 | Fuse terminal PCB AS | NAPS-8889-1A | 1B144589-1A | <D/C> |
| U026 | Clamper PCB AS | NAETC-8891-1A | 1B144591-1A | <D/C> |
| | Clamper PCB AS | NAETC-8891-1B | 1B144591-1B | <P/A> |
| U03 | XM radio PCB AS | NADG-8906-1A | 1B144506-1A | <D/C> |
| U05 | TUNER UNIT | FAE385-A11US or | 240152 or | <D/C> |
| | TUNER UNIT | ENG06507QFUS | 240156 | <D/C> |
| | TUNER UNIT | FAE485-E12EX or | 240155 or | <A> |
| | TUNER UNIT | ENG07506QFEX | 240159 | <A> |
| | TUNER UNIT | FAE485-E11EU | 240154 | <P> |

## PRINTED CIRCUIT BOARD-PARTS LIST

| CIRCUIT NO. | PART NAME | DESCRIPTION | PART NO. | REMARKS |
|---|---|---|---|---|
| U01 | **Microprocessor PCB AS** | **NADG-8876-1A/1B/1C** | | |
| U012 | **Display circuit PCB AS** | **NADIS-8877-1A/1B/1C** | | |
| U013 | **Thermal detector PCB AS** | **NAETC-8878-1A/1B/1C** | | |
| U014 | **Holder PCB** | **NAETC-8879-1A/1B/1C** | | |
| U015 | **Primary circuit PCB AS** | **NAPS-8880-1A/1B/1C** | | |
| U016 | **Transformer terminal PCB AS** | **NAETC-8881-1A/1B/1C** | | |
| U017 | **Headphone terminal PCB AS** | **NAETC-8882-1A/1B/1C** | | |
| U018 | **Video terminal PCB AS** | **NAVD-8883-1A/1B/1C** | | |
| Q852 | FL TUBE | 16-BT-128GNYK | 212258A | |
| Q251 | IC | LA7956-E | 22241759 | |
| Q601 | IC | M3062MWP-B01FP(MASK) | 22242449R3 | |
| Q701 | IC | S-812C56AUA-C3K | 22242207R2 | |
| Q706 | IC | 78M56(NJM78M56FA) | 222780565JRC | |
| Q711 | IC | S-812C53AUA-C3HT2G | 22242270R2 | <D/C> |
| Q712 | IC | 74HC4052AF | 222740525R2 | <D/C> |
| Q851 | IC | M66005-0001AHP | 22242208R3 | |
| Q855 | IC | LM61CIZ | 22242212 | |
| Q252 | TR | 2SA1162-GR | 2214375R2 | |
| Q253 | TR | 2SC2878-A(TPE2_F) | 2212285 | |
| Q254 | TR | RN1404 | 2214490R2 | |
| Q602,Q703 | TR | RN1404 | 2214490R2 | |
| Q603,Q705 | TR | RN2402 | 2214530R2 | |
| Q710 | TR | 2SA1930(ONK_Q) | 2203000 | <D/C> |
| Q853 | TR | 2SC2712-GR | 2213145R2 | |

| | | | | |
|---|---|---|---|---|
| Q854 | TR | RN1441 | 2215410R2 | |
| Q912 | TR | KTC3199-GR | 2215864 | |
| D251,D252 | C-DIODE | 1SS352 or | 223234R2 or | |
| D601,D602,D603 | C-DIODE | 1SS355 | 223269R2 | |
| D604 | ZENER D | UDZS5.1B | 224550510R2 | |
| D701,D702,D703 | C-DIODE | 1SS352 or | 223234R2 or | |
| D704,D705,D706 | C-DIODE | 1SS355 | 223269R2 | |
| D707,D708,D713 | C-DIODE | 1SS352 or | 223234R2 or | |
| D901,D902,D903 | C-DIODE | 1SS355 | 223269R2 | |
| D709,D710 | DIODE | RL1N4003 | 22380260 | <D/C> |
| D711,D712 | ZENER D | UDZS5.1B | 224550510R2 | <D/C> |
| D851 | ZENER D | UDZS8.2B | 224550820R2 | |
| D852 | LED | SEL2E10C | 225374 | |
| D853 | LED | SLI-343URC-TE7 | 225449 | |
| D854 | SPCF D | SIR-34ST3F | 225456 | |
| D904,D905,D906 | C-DIODE | 1SS352 or | 223234R2 or | |
| D908,D909 | C-DIODE | 1SS355 | 223269R2 | |
| D912,D913 | C-DIODE | 1SS352 or | 223234R2 or | |
| D991,D992 | C-DIODE | 1SS355 | 223269R2 | |
| D914 | ZENER D | UDZS5.1B | 224550510R2 | |
| L251 | CHOKE COIL | NCH-1471 | 231237K022R2 | |
| L701,L857 | CHOKE COIL | NCH-1479 | 231237K470R2 | |
| L702,L852 | CHOKE COIL | NCH-1471 | 231237K022R2 | |
| L853,L854,L855 | CHOKE COIL | NCH-1477 | 231237K220R2 | |
| T902 | P TRANS | NPT-1520JQ | 2301812 | ! <D/C> |
| | P TRANS | NPT-1519GQ | 2301811 | ! <P/A> |
| U851 | REMO SENS | NJL34H380A | 241365 | |
| X601 | CERA LOCK | CSTLS6M00G-56-A0 or | 3010427 or | |
| | CERA LOCK | CR06000-TG-A0R | 3010433 | |
| C251,C253 | VR C | CE04W50V-2.2M(VR) | 394680227 | |
| C252,C254 | VR C | CE04W16V-470M(VR) | 394644717 | |
| C255 | VR C | CE04W35V-47M(VR) | 394664707 | |
| C256,C257 | C-CERA C | CK725F1H-223Z1 | 332152230R1 | |
| C258,C259 | C-CERA C | CK725F1H-103Z1 | 332151030R1 | |
| C601,C602,C603 | C-CERA C | CK725F1H-104Z1 | 332151040R1 | |
| C604,C605 | C-CERA C | CC725CH1H-101J1 | 342101014R1 | |
| C606,C607,C609 | C-CERA C | CK725F1H-104Z1 | 332151040R1 | |
| C610,C611,C612 | C-CERA C | CK725F1H-104Z1 | 332151040R1 | |
| C613,C614,C615 | C-CERA C | CK725B1H-102K1 | 332101025R1 | |
| C616,C617,C618 | C-CERA C | CK725B1H-102K1 | 332101025R1 | |

| | | | | |
|---|---|---|---|---|
| C619,C620 | C-CERA C | CK725B1H-102K1 | 332101025R1 | |
| C621,C622 | C-CERA C | CK725F1H-104Z1 | 332151040R1 | |
| C623 | VR C | CE04W50V-4.7M(VR) | 394680477 | |
| C701,C711,C719 | C-CERA C | CK725F1H-104Z1 | 332151040R1 | |
| C702,C703 | VR C | CE04W16V-100M(VR) | 394641017 | |
| C704 | EDL C | DX-5R5L224 | 3000079 | |
| C706 | VR C | CE04W50V-10M(VR) | 394681007 | |
| C708 | C-CERA C | CK725B1A-474K1 | 332134745R1 | |
| C709,C712 | VR C | CE04W16V-100M(VR) | 394641017 | |
| C710 | VR C | CE04W10V-470M(VR) | 394634717 | |
| C714 | VR C | CE04W50V-10M(VR) | 394681007 | <D/C> |
| C715 | VR C | CE04W16V-100M(VR) | 394641017 | <D/C> |
| C716 | C-CERA C | CC725CH1H-101J1 | 342101014R1 | |
| C717 | VR C | CE04W50V-3.3M(VR) | 394680337 | |
| C718 | VR C | CE04W16V-100M(VR) | 394641017 | |
| C724,C725 | VR C | CE04W16V-100M(VR) | 394641017 | <D/C> |
| C728,C729 | C-CERA C | CK725F1H-104Z1 | 332151040R1 | |
| C853,C854 | C-CERA C | CK725F1H-223Z1 | 332152230R1 | |
| C856,C876 | C-CERA C | CK725F1H-104Z1 | 332151040R1 | |
| C857,C866 | ELECT C | CE04W16V-100M | 355741019 | |
| C858,C860 | C-CERA C | CC725CH1H-101J1 | 342101014R1 | |
| C861,C862,C863 | C-CERA C | CC725CH1H-101J1 | 342101014R1 | |
| C864,C867 | C-CERA C | CK725F1H-223Z1 | 332152230R1 | |
| C865 | ELECT C | CE04W50V-33M | 355783309 | |
| C868,C869,C870 | C-CERA C | CK725F1H-223Z1 | 332152230R1 | |
| C871 | C-CERA C | CC725CH1H-102J1 | 342101024R1 | |
| C873 | VR C | CE04W16V-100M(VR) | 394641017 | |
| C874,C875 | TF C | ECQ-B50V-102J | 374721024 | |
| C902,C991 | C-CERA C | CK725F1H-104Z1 | 332151040R1 | |
| C903 | VR C | CE04W35V-2200M(VR) | 394662227 | |
| C904 | VR C | CE04W35V-100M(VR) | 394661017 | |
| C906 | VR C | CE04W50V-4.7M(VR) | 394680477 | |
| C912 | IS C | RE275V-103M | 3500196 | ! |
| R251,R253 | C-CARBON R | RN72K1J-750JE | 435037504R1 | |
| R252,R255 | C-CARBON R | RN72K1J-684JE | 435036844R1 | |
| R254,R257 | C-CARBON R | RN72K1J-750JE | 435037504R1 | |
| R256,R260 | C-CARBON R | RN72K1J-104JE | 435031044R1 | |
| R258 | C-CARBON R | RN72K1J-562JE | 435035624R1 | |
| R259 | C-CARBON R | RN72K1J-331JE | 435033314R1 | |
| R601,R602 | C-CARBON R | RN72K1J-221JE | 435032214R1 | |

| | | | | |
|---|---|---|---|---|
| R608 | C-CARBON R | RN72K1J-221JE | 435032214R1 | <P/A> |
| R609,R610,R614 | C-CARBON R | RN72K1J-103JE | 435031034R1 | |
| R612,R615,R616 | C-CARBON R | RN72K1J-473JE | 435034734R1 | |
| R613 | C-CARBON R | RN72K1J-105JE | 435031054R1 | |
| R617 | C-CARBON R | RN72K1J-221JE | 435032214R1 | <D/C> |
| R618,R619,R620 | C-CARBON R | RN72K1J-221JE | 435032214R1 | |
| R621,R622,R624 | C-CARBON R | RN72K1J-221JE | 435032214R1 | |
| R625,R638 | C-CARBON R | RN72K1J-221JE | 435032214R1 | |
| R626,R633,R634 | C-CARBON R | RN72K1J-470JE | 435034704R1 | |
| R629,R630,R631 | C-CARBON R | RN72K1J-103JE | 435031034R1 | |
| R635,R636,R637 | C-CARBON R | RN72K1J-470JE | 435034704R1 | |
| R639,R644,R645 | C-CARBON R | RN72K1J-470JE | 435034704R1 | |
| R640,R641,R642 | C-CARBON R | RN72K1J-000JE | 435030004R1 | |
| R643,R646,R650 | C-CARBON R | RN72K1J-000JE | 435030004R1 | |
| R647,R648,R649 | C-CARBON R | RN72K1J-103JE | 435031034R1 | |
| R651,R652,R653 | C-CARBON R | RN72K1J-103JE | 435031034R1 | |
| R654,R655 | C-CARBON R | RN72K1J-221JE | 435032214R1 | |
| R656,R657,R660 | C-CARBON R | RN72K1J-000JE | 435030004R1 | |
| R658 | C-CARBON R | RN72K1J-102JE | 435031024R1 | |
| R661,R662 | C-CARBON R | RN72K1J-000JE | 435030004R1 | |
| R663,R679,R680 | C-CARBON R | RN72K1J-470JE | 435034704R1 | |
| R664,R665,R666 | C-CARBON R | RN72K1J-221JE | 435032214R1 | |
| R667,R696,R697 | C-CARBON R | RN72K1J-473JE | 435034734R1 | |
| R669,R670,R671 | C-CARBON R | RN72K1J-221JE | 435032214R1 | |
| R672,R673,R674 | C-CARBON R | RN72K1J-103JE | 435031034R1 | |
| R675,R676,R677 | C-CARBON R | RN72K1J-000JE | 435030004R1 | |
| R678 | C-CARBON R | RN72K1J-224JE | 435032244R1 | |
| R681,R682,R683 | C-CARBON R | RN72K1J-470JE | 435034704R1 | |
| R684,R685,R686 | C-CARBON R | RN72K1J-472JE | 435034724R1 | |
| R687,R688,R690 | C-CARBON R | RN72K1J-472JE | 435034724R1 | |
| R689,R691 | C-CARBON R | RN72K1J-272JE | 435032724R1 | |
| R692,R694 | C-CARBON R | RN72K1J-472JE | 435034724R1 | |
| R693,R695 | C-CARBON R | RN72K1J-272JE | 435032724R1 | |
| R699 | C-CARBON R | RN72K1J-221JE | 435032214R1 | <P> |
| R700,R714 | C-CARBON R | RN72K1J-000JE | 435030004R1 | |
| R701 | C-CARBON R | RN72K1J-102JE | 435031024R1 | |
| R704 | C-CARBON R | RN72K1J-103JE | 435031034R1 | |
| R705 | C-CARBON R | RN72K1J-222JE | 435032224R1 | |
| R709 | C-CARBON R | RN72K1J-101JE | 435031014R1 | |
| R710 | METAL O R | RS1/2WBJ-10 | 443521004 | |

| | | | | |
|---|---|---|---|---|
| R711 | METAL O R | RS1/2WBJ-33 | 443523304 | <D/C> |
| R712 | METAL R | RNU1/2WCJ-0.22 | 453532294 | <D/C> |
| R716 | C-CARBON R | RN72K1J-000JE | 435030004R1 | |
| R717 | C-CARBON R | RN72K1J-103JE | 435031034R1 | |
| R719 | C-CARBON R | RN72K1J-333JE | 435033334R1 | <A> |
| | C-CARBON R | RN72K1J-563JE | 435035634R1 | <P> |
| R720 | C-CARBON R | RN72K1J-000JE | 435030004R1 | <D/C> |
| | C-CARBON R | RN72K1J-333JE | 435033334R1 | <P> |
| | C-CARBON R | RN72K1J-563JE | 435035634R1 | <A> |
| R721,R722 | C-CARBON R | RN72K1J-473JE | 435034734R1 | |
| R723,R724 | C-CARBON R | RN72K1J-473JE | 435034734R1 | <D/C> |
| R725,R726 | C-CARBON R | RN72K1J-473JE | 435034734R1 | <D/C> |
| R727,R728 | C-CARBON R | RN72K1J-221JE | 435032214R1 | <D/C> |
| R729 | C-CARBON R | RN72K1J-105JE | 435031054R1 | |
| R730,R731 | C-CARBON R | RN72K1J-152JE | 435031524R1 | <D/C> |
| R733 | METAL O R | RS1WBJ-10 | 443621004 | |
| R734 | METAL O R | RS1WBJ-270 | 443622714 | |
| R735,R736,R737 | C-CARBON R | RN72K1J-000JE | 435030004R1 | |
| R738,R739 | C-CARBON R | RN72K1J-000JE | 435030004R1 | |
| R740,R741 | C-CARBON R | RN72K1J-000JE | 435030004R1 | |
| R850 | C-CARBON R | RN72K1J-103JE | 435031034R1 | |
| R851,R858 | C-CARBON R | RN72K1J-821JE | 435038214R1 | |
| R852,R859 | C-CARBON R | RN72K1J-122JE | 435031224R1 | |
| R853,R860,R867 | C-CARBON R | RN72K1J-222JE | 435032224R1 | |
| R854,R861 | C-CARBON R | RN72K1J-392JE | 435033924R1 | |
| R855 | C-CARBON R | RN72K1J-331JE | 435033314R1 | |
| R856,R863 | C-CARBON R | RN72K1J-471JE | 435034714R1 | |
| R857,R864 | C-CARBON R | RN72K1J-561JE | 435035614R1 | |
| R862,R869,R876 | C-CARBON R | RN72K1J-331JE | 435033314R1 | |
| R865,R872 | C-CARBON R | RN72K1J-821JE | 435038214R1 | |
| R866,R873 | C-CARBON R | RN72K1J-122JE | 435031224R1 | |
| R870,R877 | C-CARBON R | RN72K1J-471JE | 435034714R1 | |
| R871,R878 | C-CARBON R | RN72K1J-561JE | 435035614R1 | |
| R874,R891 | C-CARBON R | RN72K1J-222JE | 435032224R1 | |
| R875,R892 | C-CARBON R | RN72K1J-392JE | 435033924R1 | |
| R879,R880 | C-CARBON R | RN72K1J-332JE | 435033324R1 | |
| R881,R882 | C-CARBON R | RN72K1J-221JE | 435032214R1 | |
| R883 | C-CARBON R | RN72K1J-273JE | 435032734R1 | |
| R884 | C-CARBON R | RN72K1J-104JE | 435031044R1 | |
| R885,R886 | C-CARBON R | RN72K1J-221JE | 435032214R1 | |

| | | | | |
|---|---|---|---|---|
| R887 | C-CARBON R | RN72K1J-101JE | 435031014R1 | |
| R888 | C-CARBON R | RN72K1J-102JE | 435031024R1 | |
| R889 | C-CARBON R | RN72K1J-123JE | 435031234R1 | |
| R890 | C-CARBON R | RN72K1J-101JE | 435031014R1 | |
| R909,R914 | C-CARBON R | RN72K1J-104JE | 435031044R1 | |
| R913 | C-CARBON R | RN72K1J-102JE | 435031024R1 | |
| R915 | METAL O R | RS1/2WBJ-150 | 443521514 | |
| RL902 | RELAY | NRL-1P5A-DC9-179 | 25065669 | ! |
| S851,S852,S853 | PUSH SW | NPS-111-S681 | 25035718 | |
| S854,S855 | PUSH SW | NPS-111-S681 | 25035718 | |
| S856,S857,S858 | PUSH SW | NPS-111-S681 | 25035718 | |
| S859,S860,S861 | PUSH SW | NPS-111-S681 | 25035718 | |
| S862,S863,S864 | PUSH SW | NPS-111-S681 | 25035718 | |
| S865,S866,S867 | PUSH SW | NPS-111-S681 | 25035718 | |
| S868,S869,S870 | PUSH SW | NPS-111-S681 | 25035718 | |
| S872,S873,S874 | PUSH SW | NPS-111-S681 | 25035718 | |
| S875,S876,S877 | PUSH SW | NPS-111-S681 | 25035718 | |
| S878,S879,S880 | PUSH SW | NPS-111-S681 | 25035718 | |
| S881,S882,S883 | PUSH SW | NPS-111-S681 | 25035718 | |
| S884 | PUSH SW | NPS-111-S681 | 25035718 | <P> |
| P910 | AC OUTLET | NSCT-4P913 | 25051126 | ! <D/C> |
| | SOCKET | NSCT-4P912 | 25051125 | ! <P> |
| | AC OUTLET | NSCT-2P2013 | 25052115 | ! <A> |
| F901A,F901B | FUSE HOL | NSCT-1P2031 | 25052133 | ! <D/C> |
| F902A,F902B | FUSE HOL | NSCT-1P2031 | 25052133 | ! <P/A> |
| F903A,F903B | FUSE HOL | NSCT-1P2031 | 25052133 | ! |
| P251 | PIN JACK | NPJ-4PDYE190 | 25045339 | |
| P503 | JACK | YKB26-5009 | 25045255 | |
| P706 | ST JACK | HSJ1002-01-1020 | 25045647 | |
| P707 | ST JACK | LGY2502-0200FC | 25045696 | |
| F903C | LABEL | T2.5AL250V | 29361747 | <P/A> |
| JL703B | SOCKET | NSCT-3P95 | 25050267 | |
| P701A | SOCKET | NSCT-19P2199 | 25052302 | |
| P702A | SOCKET | NSCT-13P2193 | 25052296 | |
| P704A | SOCKET | NSCT-13P2106 | 25052209 | |
| P705 | SOCKET | NSCT-9P2427 | 25052530 | |
| P715A | SOCKET | NSCT-24P2117 | 25052220 | |
| P715B | SOCKET | NSCT-24P1655 | 25051868 | |
| JL261A | WIRE HOL | NSCT-4P895 | 25051108 | |
| JL703A | WIRE HOL | NSCT-3P894 | 25051107 | |

| | | | | |
|---|---|---|---|---|
| JL711A,JL716B | WIRE HOL | NSCT-3P894 | 25051107 | |
| JL911A | WIRE HOL | NSCT-6P877 | 25051090 | |
| JL911B | WIRE TRAP | NPLG-6P589 | 25055627 | |
| P211B | PLUG | NPLG-11P663 | 25055707 | <D/C> |
| P212B | PLUG | NPLG-7P659 | 25055703 | <D/C> |
| P901A | PLUG | NPLG-2P631 | 25055675 | ! |
| P504 | CRIMP AS | CRIMP AS | 2061712200UL | |
| P911 | CRIMP AS | CRIMP AS | 2069943351UL | |
| P912 | CRIMP AS | CRIMP AS | 2069943459UL | |
| P991 | RETAINER | MET37-0002 | 27142009 | |
| Q855A | RETAINER | (PTH) | 27141884-1 | |
| P708 | TRM(SCREW) | FOR GND SCREW | 25065425 | |
| Q710B | SCREW | 3TTB+8B(CU)SR | 801618 | |
| Q710A | HEAT SINK | RAD-178 | 27160518 | |
| Q852A | HOLDER | (FL) | 27191222B | |
| U02 | **Main circuit PCB AS** | **NAAF-8886-1A/1B** | | |
| U022 | **Transformer terminal PCB AS** | **NAPS-8887-1A/1B** | | |
| U023 | **Volume PCB AS** | **NAAF-8888-1A/1B** | | |
| U024 | **Fuse terminal PCB AS** | **NAPS-8889-1A** | | <D/C> |
| U026 | **Clamper PCB AS** | **NAETC-8891-1A/1B** | | |
| Q301 | IC | NJM4558D-X | 222502 | |
| Q302 | IC | TC9273CNG-010 | 22242335 | |
| Q401,Q402,Q403 | IC | NJM2068L-D | 22240250 | |
| Q481 | IC | TA7291SG(5_J) | 22240239 | |
| Q921 | IC | BAJ2CC0T | 22278012DRH | <D/C> |
| Q921 | IC | 78M12HF or | 222780125 or | <P/A> |
| | IC | 78M12HF(NJM78M12FA) or | 222780125JRC or | <P/A> |
| | IC | 78M12HF(MPC78M12HF) | 222780125NEC | <P/A> |
| Q922 | IC | 79M12HF | 222790125 | |
| Q452 | TR | DTC123JS or | 2213640 or | |
| | TR | KRC105M | 2215830 | |
| Q491,Q492 | TR | RN1241-A(TPE4_F) or | 2213631 or | |
| | TR | RN1241-B | 2213632 | |
| Q493 | TR | KRA102M or | 2215770 or | |
| | TR | DTA114ES | 2213510 | |
| Q501,Q502 | TR | 2SC2240-BL(TPE2_F) | 2211406 | |
| Q503,Q504 | TR | 2SC2240-BL(TPE2_F) | 2211406 | |
| Q505,Q506 | TR | 2SC2240-BL(TPE2_F) or | 2211406 or | |
| | TR | 2SC2240-GR | 2211405 | |
| Q507,Q508,Q509 | TR | 2SA949-Y(TPE6_F) or | 2211354 or | |

| | | | | |
|---|---|---|---|---|
| Q510,Q513,Q514 | TR | 2SA949-O(TPE6_F) | 2211353 | |
| Q515,Q516 | TR | 2SC2229-Y(TPE6_F) or | 2211634 or | |
| | TR | 2SC2229-O(TPE6_F) | 2211633 | |
| Q517,Q518 | TR | 2SC5171(ONK_Q) | 2203010 | |
| Q519,Q520 | TR | 2SA1930(ONK_Q) | 2203000 | |
| Q527,Q528 | TR | 2SC2229-Y(TPE6_F) or | 2211634 or | |
| | TR | 2SC2229-O(TPE6_F) | 2211633 | |
| Q529,Q530 | TR | 2SC2458-GR or | 2212115 or | |
| | TR | 2SC2458-BL or | 2212116 or | |
| | TR | KTC3199-GR | 2215864 | |
| Q531Q532 | TR | 2SC1740S-S | 2213285 | |
| Q533,Q534 | TR | 2SC1740S-S | 2213285 | |
| Q581,Q582 | TR | 2SC2240-GR or | 2211405 or | |
| | TR | 2SC2240-BL(TPE2_F) or | 2211406 or | |
| | TR | KTC3200-GR or | 2215895 or | |
| | TR | KTC3200-BL | 2215896 | |
| Q583 | TR | 2SA970-GR or | 2211395 or | |
| | TR | 2SA970-BL(TPE2_F) or | 2211396 or | |
| | TR | KTA1268-GR or | 2215885 or | |
| | TR | KTA1268-BL | 2215886 | |
| Q591,Q592 | TR | DTC123JS or | 2213640 or | |
| | TR | KRC105M | 2215830 | |
| Q924 | TR | 2SA965-Y(TPE6_F) | 2211644 | |
| Q925 | TR | DTC123JS or | 2213640 or | <D/C> |
| | TR | KRC105M | 2215830 | <D/C> |
| D450,D491,D511,D512,D591,D592 | DIODE | 1SS133 or | 223163 or | |
| | DIODE | 1SS133(DS) | 223280 | |
| D571 | ZENER D | MTZJ5.1B or | 224470512 or | |
| | ZENER D | DZ-5.1BSB | 224850512 | |
| D912 | DIODE | D10XB60H | 22380337F | <D/C> |
| D918 | DIODE | D3SBA20 or | 22380271 or | |
| | DIODE | RBV402 | 22380022 | |
| D920,D921,D924 | DIODE | RL1N4003 or | 22380260 or | |
| | DIODE | GP104003E | 22380035 | |
| D922 | ZENER D | MTZJ33D | 224473304 | |
| D951 | DIODE | 1SS133 or | 223163 or | <D/C> |
| | DIODE | 1SS133(DS) | 223280 | <D/C> |
| D952,D953 | DIODE | 1SS133 or | 223163 or | |
| D983,D984 | DIODE | 1SS133(DS) | 223280 | |
| D954 | ZENER D | MTZJ4.7B | 224470472 | |

| | | | | |
|---|---|---|---|---|
| L501,L502 | S COIL | S-1.3C | 231176S | |
| C301,C302 | TF C | ECQ-B50V 471K | 374724715 | |
| C303,C304 | VX C | CE04W25V-47M(VX) | 393354707 | |
| C305,C306 | TF C | ECQ-B50V-152J | 374721524 | |
| C307,C308 | VX C | CE04W10V-100M(VX) | 393331017 | |
| C309,C310 | TF C | ECQ-B50V-682J | 374726824 | |
| C311,C312 | TF C | ECQ-B50V-182J | 374721824 | |
| C313,C314 | VX C | CE04W50V-10M(VX) | 393381007 | |
| C315,C316 | VR C | CE04W16V-220M(VR) | 394642217 | |
| C317,C318 | TF C | ECQ-B50V-101K | 374721015 | <P/A> |
| C321.C322,C325 | TF C | ECQ-B50V-101K | 374721015 | <P/A> |
| C326,C327,C328 | TF C | ECQ-B50V-101K | 374721015 | <P/A> |
| C331,C332 | TF C | ECQ-B50V-101K | 374721015 | <P/A> |
| C341,C342 | CERA C | CK45F50V-223Z | 335622230 | |
| C343,C345 | CERA C | CK45F50V-223Z | 335622230 | |
| C353,C354 | VR C | CE04W50V-22M(VR) | 394682207 | |
| C391,C392 | TF C | ECQ-B50V-101K | 374721015 | |
| C401,C402,C403 | VX C | CE04W25V-47M(VX) | 393354707 | |
| C404,C407,C408 | VX C | CE04W25V-47M(VX) | 393354707 | |
| C405,C406 | TF C | ECQ-B50V-101K | 374721015 | |
| C409,C410 | TF C | ECQ-B50V-101K | 374721015 | <P/A> |
| C411,C412 | VX C | CE04W25V-47M(VX) | 393354707 | |
| C415,C416 | VR C | CE04W16V-220M(VR) | 394642217 | |
| C421,C422 | TF C | ECQ-B50V-223J | 374722234 | |
| C423,C424 | CERA C | CK45F50V-223Z | 335622230 | |
| C433,C434 | TF C | ECQ-B50V-103J | 374721034 | |
| C441 | VR C | CE04W16V-100M(VR) | 394641017 | |
| C442 | VR C | CE04W50V-1M(VR) | 394680107 | |
| C451,C452 | VX C | CE04W25V-47M(VX) | 393354707 | |
| C453,C454 | TF C | ECQ-B50V-101K | 374721015 | |
| C455,C456 | VX C | CE04W25V-47M(VX) | 393354707 | |
| C457,C458 | TF C | ECQ-B50V-101K | 374721015 | <P/A> |
| C459 | TF C | ECQ-B50V-103J | 374721034 | |
| C501,C502 | VX C | CE04W50V-47M(VX) | 393384707 | |
| C503,C504 | TF C | ECQ-B50V-101K | 374721015 | |
| C505,C506 | VX C | CE04W25V-220M(VX) | 393352217 | |
| C509,C510 | VX C | CE04W50V-10M(VX) | 393381007 | |
| C513,C514 | VX C | CE04W25V-47M(VX) | 393354707 | |
| C515,C516 | TF C | ECQ-B50V-101K | 374721015 | |
| C517,C518 | TF C | ECQ-V50V-473J | 374724734 | |

| | | | | |
|---|---|---|---|---|
| C519,C520 | TF C | ECQ-V50V-104J | 374721044 | |
| C521,C522 | VX C | CE04W50V-10M(VX) | 393381007 | |
| C523,C524 | CERA C | CC45SL50V-020C | 345020201 | |
| C527,C528 | VR C | CE04W63V-47M(VR) | 394674707 | <P/A> |
| | VR C | CE04W100V-47M(VR) | 394694707 | <D/C> |
| C531,C532,C533 | TF C | ECQ-B50V-102J | 374721024 | |
| C534,C535,C536 | TF C | ECQ-B50V-102J | 374721024 | |
| C581 | VR C | CE04W16V-100M(VR) | 394641017 | |
| C582 | CERA C | CK45F50V-223Z | 335622230 | |
| C583 | VR C | CE04W50V-1M(VR) | 394680107 | |
| C591,C592 | TF C | ECQ-B50V-103J | 374721034 | |
| C648 | CERA C | CK45F50V-223Z | 335622230 | |
| C911,C912 | TF C | ECQ-V50V-334J | 374723344 | <P/A> |
| | TF C | ECQ-V100-334J | 374733344 | <D/C> |
| C915,C916 | ELECT C | CE69W69V-10000MA | 3504425 | <D/C> |
| | ELECT C | CE69W56V-8200MB | 3504416 | <P/A> |
| C918 | VR C | CE04W35V-1000M(VR) | 394661027S | <P/A> |
| | VR C | CE04W35V-4700M(VR) | 394664727S | <D/C> |
| C919 | VR C | CE04W35V-330M(VR) | 394663317 | |
| C920 | CERA C | CK45F50V-223Z | 335622230 | <P/A> |
| | TF C | ECQ-V50V-474J | 374724744 | <D/C> |
| C921,C930,C931 | CERA C | CK45F50V-223Z | 335622230 | |
| C922 | VR C | CE04W50V-33M(VR) | 394683307 | |
| C923,C941 | VX C | CE04W50V-10M(VX) | 393381007 | |
| C924,C925 | TF C | ECQ-V50V-334J | 374723344 | |
| C926,C928 | VR C | CE04W50V-100M(VR) | 394681017 | |
| C953 | VR C | CE04W50V-4.7M(VR) | 394680477 | |
| C971 | CERA C | CK45F50V-223Z | 335622230 | |
| C982 | TF C | ECQ-B50V-222J | 374722224 | |
| C991,C992 | TF C | ECQ-V50V-104J | 374721044 | |
| R301,R302 | CARBON R | R16J-1K | 417341024 | |
| R303,R304 | CARBON R | R16J-56K | 417345634 | |
| R305,R306 | CARBON R | R16J-220K | 417342244 | |
| R307,R308 | CARBON R | R16J-820 | 417348214 | |
| R309,R310 | CARBON R | R16J-470K | 417344744 | |
| R311,R312 | CARBON R | R16J-39K | 417343934 | |
| R313,R314 | CARBON R | R16J-100K | 417341044 | |
| R315,R316 | CARBON R | R16J-330 | 417343314 | |
| R317,R318 | CARBON R | R16J-1M | 417341054 | |
| R319,R320 | CARBON R | R16J-2.2K | 417342224 | |

| | | | | |
|---|---|---|---|---|
| R321,R322 | CARBON R | R16J-1M | 417341054 | |
| R323,R324 | CARBON R | R16J-330 | 417343314 | |
| R325,R326 | CARBON R | R16J-1M | 417341054 | |
| R327,R328 | CARBON R | R16J-2.2K | 417342224 | |
| R329,R330 | CARBON R | R16J-1M | 417341054 | |
| R331,R332 | CARBON R | R16J-330 | 417343314 | |
| R333,R334 | CARBON R | R16J-1M | 417341054 | |
| R335,R336 | CARBON R | R16J-330 | 417343314 | |
| R337,R338 | CARBON R | R16J-1M | 417341054 | |
| R339,R340 | CARBON R | R16J-2.2K | 417342224 | |
| R341,R342 | CARBON R | R16J-1M | 417341054 | |
| R343,R344 | CARBON R | R16J-330 | 417343314 | |
| R345,R346 | CARBON R | R16J-1M | 417341054 | |
| R349,R350 | CARBON R | R16J-22K | 417342234 | |
| R351,R352,R353 | NF CARBON R | R25J-10 | 415471004 | |
| R354,R441,R442 | NF CARBON R | R25J-10 | 415471004 | |
| R391,R392 | CARBON R | R16J-1K | 417341024 | |
| R393 | VARI R | N11RLC250KWT20Z | 5104288 | |
| R401,R402 | CARBON R | R16J-1K | 417341024 | |
| R403,R404,R435 | CARBON R | R16J-220K | 417342244 | |
| R405,R406 | CARBON R | R16J-22K | 417342234 | |
| R407,R408 | CARBON R | R16J-3.3K | 417343324 | |
| R409,R415 | VARI R | N14RLC100KWT20Z | 5104356 | |
| R411,R412 | CARBON R | R16J-1.2K | 417341224 | |
| R413,R414 | CARBON R | R16J-100K | 417341044 | |
| R417,R418 | CARBON R | R16J-1K | 417341024 | |
| R419,R420 | CARBON R | R16J-3.3K | 417343324 | |
| R436 | CARBON R | R16J-2.2K | 417342224 | |
| R451,R452 | CARBON R | R16J-3.3K | 417343324 | |
| R453,R454 | CARBON R | R16J-82K | 417348234 | |
| R455,R456 | CARBON R | R16J-22K | 417342234 | |
| R457,R458 | CARBON R | R16J-3.3K | 417343324 | |
| R459,R460 | CARBON R | R16J-3.3K | 417343324 | |
| R461,R462 | CARBON R | R16J-100K | 417341044 | |
| R491,R492 | CARBON R | R16J-47K | 417344734 | |
| R501,R502 | CARBON R | R16J-470 | 417344714 | |
| R503,R504 | CARBON R | R16J-27K | 417342734 | |
| R505,R506 | CARBON R | R16J-10 | 417341004 | |
| R507,R508 | CARBON R | R16J-47 | 417344704 | |
| R509,R510 | CARBON R | R16J-47 | 417344704 | |

| | | | | |
|---|---|---|---|---|
| R511,R512 | CARBON R | R16J-5.6K | 417345624 | |
| R513,R514 | CARBON R | R16J-56K | 417345634 | |
| R515,R516 | CARBON R | R16J-1K | 417341024 | <D/C> |
| | CARBON R | R16J-1.5K | 417341524 | <P/A> |
| R517,R518 | CARBON R | R16J-1K | 417341024 | |
| R519,R520 | CARBON R | R16J-1K | 417341024 | |
| R521,R522,R523 | METAL O R | RS1/2WBJ-82 | 443528204 | |
| R524,R527,R528 | METAL O R | RS1/2WBJ-82 | 443528204 | |
| R525.R526 | METAL O R | RS1/2WBJ-68 | 443526804 | |
| R529,R530 | METAL O R | RS1/2WBJ-56 | 443525604 | |
| R531,R532 | CARBON R | R16J-18K | 417341834 | |
| R533,R534 | CARBON R | R16J-56K | 417345634 | |
| R535,R536 | CARBON R | R16J-18K | 417341834 | |
| R539,R540,R541 | METAL R | RNU1/2WCJ-2.2 | 453530224 | |
| R542,R593,R594 | METAL R | RNU1/2WCJ-2.2 | 453530224 | |
| R543,R544 | METAL O R | RS1/2WBJ-220 | 443522214 | |
| R545,R546,R572 | CARBON R | R16J-22K | 417342234 | |
| R547,R548 | METAL PR | RGC55 0.22 or | 4000132 or | |
| | METAL PR | MPR5W+5W 0R22 | 4000233 | |
| R549,R550 | CARBON R | R16J-2.7K | 417342724 | <D/C> |
| | CARBON R | R16J-3.3K | 417343324 | <P/A> |
| R551,R552,R571 | CARBON R | R16J-33K | 417343334 | |
| R553,R554,R574 | CARBON R | R16J-47K | 417344734 | |
| R555,R556 | METAL R | RNU1/2WCJ-8.2 | 453530824 | |
| R561,R562 | CARBON R | R16J-270 | 417342714 | |
| R563,R564 | CARBON R | R16J-100K | 417341044 | |
| R565,R566 | CARBON R | R16J-120K | 417341244 | |
| R567,R568 | CARBON R | R16J-22 | 417342204 | |
| R569,R570 | CARBON R | R16J-22 | 417342204 | |
| R573 | CARBON R | R16J-10K | 417341034 | |
| R575 | CARBON R | R16J-220K | 417342244 | |
| R577,R578 | CARBON R | R16J-120K | 417341244 | |
| R579,R580 | CARBON R | R16J-100 | 417341014 | |
| R581,R582 | CARBON R | R16J-5.6K | 417345624 | |
| R583,R584 | CARBON R | R16J-3.9K | 417343924 | |
| R585,R586 | CARBON R | R16J-470 | 417344714 | <D/C> |
| R585,R586 | CARBON R | R16J-820 | 417348214 | <P/A> |
| R587,R588 | TRIM R | N06HR2KBC | 5210390 | |
| R589,R590 | CARBON R | R16J-3.3K | 417343324 | |
| R591,R592 | NF CARBON R | R25J-2.2 | 415470224 | |

| | | | | |
|---|---|---|---|---|
| R595 | METAL O R | RS1/2WBJ-10 | 443521004 | |
| R598,R599 | METAL O R | RS1WBJ-390 | 443623914 | |
| R641 | VARI R | N16RGL100KBT25F | 5104334 | |
| R643,R644 | CARBON R | R16J-8.2K | 417348224 | |
| R900,R901,R904 | METAL R | RNU2WCJ-1.2 | 452730124F | <D/C> |
| R905,R906 | METAL R | RNU2WCJ-1.2 | 452730124F | <D/C> |
| R919 | METAL R | RNU1/2WCJ-1 | 453530104 | |
| R921,R922 | METAL R | RNU1/2WCJ-0.47 | 453534794 | <P/A> |
| R923 | METAL R | RNU1/2WCJ-5.6 | 453530564 | |
| R924 | METAL O R | RS1/2WBJ-560 | 443525614 | |
| R925 | METAL O R | RS1/2WBJ-10 | 443521004 | <D/C> |
| R931 | NF CARBON R | R25J-3.3K | 415473324 | |
| R932 | CARBON R | R16J-330K | 417343344 | |
| R933 | METAL O R | RS1/2WBJ-22 | 443522204 | |
| R934 | METAL O R | RS1/2WBJ-100 | 443521014 | |
| R951,R952 | METAL R | RNU1/2WCJ-2.2 | 453530224 | |
| R953 | CARBON R | R16J-100K | 417341044 | |
| RL450 | RELAY | NRL-2P2A-DC12-178 | 25065664 | |
| RL591,RL592 | RELAY | NRL-2P5A-DC24-158 or | 25065618 or | |
| | RELAY | NRL-2P5A-DC24-129 | 25065563 | |
| RL921,RL922 | RELAY | NRL-1P10A-DC12-140 | 25065584 | <D/C> |
| E591,E592 | RETAINER | MET37-0002 | 27142009 | |
| F911A,F911B | FUSE HOL | NSCT-1P2031 | 25052133 | ! <D/C> |
| F912A,F912B | FUSE HOL | NSCT-1P2031 | 25052133 | ! <D/C> |
| F913A,F913B | FUSE HOL | NSCT-1P2031 | 25052133 | ! <D/C> |
| F914A,F914B | FUSE HOL | NSCT-1P2031 | 25052133 | ! <D/C> |
| P301,P302 | PIN JACK | NPJ-6PDWWWRRR561 or | 25045779 or | |
| | PIN JACK | NPJ-6PDBL159 | 25045300 | |
| P303 | PIN JACK | NPJ-6PDWWWRRR561 or | 25045779 or | |
| | PIN JACK | NPJ-6PDBL159 | 25045300 | |
| P501 | TRM | NTM-8PDMC396 | 25060467 | |
| P704B,P705B | TRM(SCREW) | FOR GND SCREW | 25065425 | |
| P919 | TRM | NTM-1P233(M1969) | 25060302 | <D/C> |
| JL261B | SOCKET | NSCT-4P96 | 25050268 | |
| JL711B,JL716B | SOCKET | NSCT-3P95 | 25050267 | |
| JL918A | SOCKET | NSCT-4P96 | 25050268 | <D/C> |
| JL613A | WIRE HOL | NSCT-10P881 | 25051094 | |
| JL913A,JL913B | WIRE HOL | NSCT-5P896 | 25051109 | |
| JL917A,JL917B | WIRE HOL | NSCT-4P895 | 25051108 | <D/C> |
| JL918B | WIRE HOL | NSCT-4P895 | 25051108 | <D/C> |

| | | | | |
|---|---|---|---|---|
| P511,P512 | PLUG | NPLG-2P29 | 25055038 | |
| P701B | PLUG | NPLG-19P0974 | 25056024 | |
| P702B | PLUG | NPLG-13P0968 | 25056018 | |
| JL613B | WIRE TRAP | NPLG-10P593 | 25055631 | |
| P914A | CRIMP AS | CRIMP AS | 2069925402UL | |
| P915A | CRIMP AS | CRIMP AS | 2069925450UL | |
| P916A | CRIMP AS | CRIMP AS | 2069925459UL | |
| Q921A | HEAT SINK | RAD-165 | 27160500 | <D/C> |
| | HEAT SINK | RAD-183 | 27160526 | <P/A> |
| D918A | HEAT-SINK | HEAT-SINK(RAD-68) | 27160211 | <D/C> |
| Q921C,Q922C | SCREW | 3TTB+10S(3BC) | 838430107GR | |
| D918B | SCREW | 3TTB+10S(3BC) | 838430107GR | <D/C> |
| **U03** | **XM radio PCB** | **NADG-8906-1A** | | <D/C> |
| Q201 | IC | F2602E-01 | 22242266R2 | <D/C> |
| Q202 | IC | AK4384ET | 22242280R2 | <D/C> |
| Q203 | IC | NJM4580M-D | 22241448R2 | <D/C> |
| Q204 | IC | BA33BC0FP or | 22278033DR2RH or | <D/C> |
| | IC | NJM2391DL1-33 | 22278033DR2JR | <D/C> |
| Q205 | IC | NJM78L05UA | 222780053R2JR | <D/C> |
| Q206 | IC | TC74HCT7007AF(EL_F) | 222740077R2TO | <D/C> |
| Q207 | IC | TC74VHC541FT or | 22274541ER2TO or | <D/C> |
| | IC | TC74VHC541FT(EKJ) or | 22274541E1R2TO or | <D/C> |
| | IC | SN74AHC541PWR | 22274541IR2TI | <D/C> |
| D201 | ZENER D | UDZS5.1B | 224550510R2 | <D/C> |
| L201,L203 | CHOKE COIL | NCH-1471 | 231237K022R2 | <D/C> |
| L204,L205,L206 | CHOKE COIL | BLM21PG221SN1 | 230949R2 | <D/C> |
| L202 | EMIFIL | BK1608LM182-T | 230958R1 | <D/C> |
| X201 | CRYSTAL | DSX840GA 45.1584MHz or | 3010420R2 or | <D/C> |
| | CRYSTAL | FCX-02N 45.1584MHz | 3010421R2 | <D/C> |
| C201,C203,C204 | C-CERA C | CK725F1H-104Z1 | 332151040R1 | <D/C> |
| C202,C214,C244 | C-CERA C | CK725B1H-102K1 | 332101025R1 | <D/C> |
| C205,C206,C210 | C-CERA C | CK725F1H-104Z1 | 332151040R1 | <D/C> |
| C207,C229 | VR C | CE04W16V-100M(VR) | 394641017T | <D/C> |
| C208 | C-CERA C | CC725CH1H-040C1 | 342100401R1 | <D/C> |
| C209 | C-CERA C | CC725CH1H-080D1 | 342100802R1 | <D/C> |
| C211,C212,C213 | C-CERA C | CK725F1H-104Z1 | 332151040R1 | <D/C> |
| C215,C217 | C-CERA C | CK725F1H-104Z1 | 332151040R1 | <D/C> |
| C216,C221,C222 | VR C | CE04W50V-10M(VR) | 394681007T | <D/C> |
| C218,C233 | VR C | CE04W6.3V-470M(VR) | 394624717T | <D/C> |
| C223,C224 | C-CERA C | CC725CH1H-821J1 | 342108214R1 | <D/C> |

| | | | | |
|---|---|---|---|---|
| C225,C226 | C-CERA C | CC725CH1H-821J1 | 342108214R1 | <D/C> |
| C227,C228 | VR C | CE04W50V-10M(VR) | 394681007T | <D/C> |
| C230,C234 | VR C | CE04W16V-100M(VR) | 394641017T | <D/C> |
| C231,C232,C235 | C-CERA C | CK725F1H-104Z1 | 332151040R1 | <D/C> |
| C236,C240 | C-CERA C | CK725F1H-104Z1 | 332151040R1 | <D/C> |
| C241,C242 | C-CERA C | CK725F1H-104Z1 | 332151040R1 | <D/C> |
| C243 | VR C | CE04W6.3V-100M(VR) | 394621017T | <D/C> |
| R201,R202,R203 | C-CARBON R | RN72K1J-104JE | 435031044R1 | <D/C> |
| R204,R205 | C-CARBON R | RN72K1J-104JE | 435031044R1 | <D/C> |
| R206,R207 | C-CARBON R | RN72K1J-102JE | 435031024R1 | <D/C> |
| R208,R209,R212 | C-CARBON R | RN72K1J-101JE | 435031014R1 | <D/C> |
| R210 | C-CARBON R | RN72K1J-681JE | 435036814R1 | <D/C> |
| R211 | C-CARBON R | RN72K1J-105JE | 435031054R1 | <D/C> |
| R213,R214,R215 | C-CARBON R | RN72K1J-331JE | 435033314R1 | <D/C> |
| R216,R248 | C-CARBON R | RN72K1J-000JE | 435030004R1 | <D/C> |
| R221,R222,R225 | C-CARBON R | RN72K1J-222JE | 435032224R1 | <D/C> |
| R223,R224 | C-CARBON R | RN72K1J-104JE | 435031044R1 | <D/C> |
| R226,R227,R228 | C-CARBON R | RN72K1J-222JE | 435032224R1 | <D/C> |
| R229,R230 | C-CARBON R | RN72K1J-332JE | 435033324R1 | <D/C> |
| R231,R232,R233 | C-CARBON R | RN72K1J-220JE | 435032204R1 | <D/C> |
| R234,R238,R239 | C-CARBON R | RN72K1J-220JE | 435032204R1 | <D/C> |
| R244 | C-CARBON R | RN72K1J-221JE | 435032214R1 | <D/C> |
| R247 | C-CARBON R | RN72K1J-220JE | 435032204R1 | <D/C> |
| P201 | SOCKET | CAM-C16 | 25053104R2 | <D/C> |
| P211A | SOCKET | NSCT-11P1026 | 25051236 | <D/C> |
| P212A | SOCKET | NSCT-7P1022 | 25051232 | <D/C> |
| E201,E202 | TRM(SCREW) | SCREW TRM M3 | 25065425 | <D/C> |
| P201A | RETAINER | (XM) | 27142044 | <D/C> |

## PACKING VIEW-PARTS LIST

| REF. NO. | PART NAME | DESCRIPTION | PART NO. | REMARKS |
|---|---|---|---|---|
| A601 | CARTON | | 29054538A | <C> |
| | CARTON | | 29054513A | <D> |
| | CARTON | | 29054524A | <A> |
| | CARTON | | 29054514A | <B> <P> |
| | CARTON | | 29054515A | <S> <P> |
| A602 | POLY BAG | POLY BAG(850*650) | 29100034-1A | |
| A603 | WRNTY CARD | | 29365102A | <D/C> |
| A604 | TAPE | Cellophane | 29110149 | |
| A605 | PP TAPE | W48 OPP TAPE | 29110148 | |

| | | | | |
|---|---|---|---|---|
| A606 | EAN LABEL | . | 29364450 | <B> <P/A> |
| | EAN LABEL | . | 29364451 | <S> |
| | UPC LABEL | . | 29364448 | <D/C> |
| A609 | PAD | (AS) | 29092318A | |
| A610 | HANDBILL | (DS-A1) | 29380140 | <D/C> |
| | HANDBILL | (DS-A1)EU | 29380141 | <P> |
| A611 | POLY BAG | 350*250 | 29100097-1A | |
| A612 | POLY BAG for power cord | 350*250 | 29100097-1A | <P/A> |
| A802 | BATTERY | R6/AA(UM-3) | 3010054 | |
| A803 | ANT COIL | NMA-3057 | 232140 | AM ANT. |
| A804 | FM ANT AS | Type W | 292191 | |
| A820 | INS MANUAL | En | 29344234 | |
| A821 | INS MANUAL | U2FrEs | 29344235 | <P/C> |
| A822 | INS MANUAL | U2ItDe | 29344236 | <P> |
| A823 | INS MANUAL | U2NlSv | 29344237 | <P> |
| A826 | INS MANUAL | En(XM radio) | 29344288 | <D/C> |
| A827 | INS MANUAL | FrEs(XM radio) | 29344289 | <C> |
| A835 | INST SHEET | WEEE | 29355537 | <P> |
| A836 | REMO CON | RC-664S | 24140664 | <D/C> |
| | REMO CON | RC-665S | 24140665 | <P/A> |
| A837 | INST SHEET | En(XM RADIO) | 29355538 | <D/C> |
| P501A | TRM | (WRENCH) | 25060468 | |
| P501C | INST SHEET | ERRATA(SP) | 29355562 | |

**ONKYO CORPORATION**
Sales & Product Planning Div. : 2-1, Nisshin-cho, Neyagawa-shi, OSAKA 572-8540, JAPAN
Tel: 072-831-8023  Fax: 072-831-8124

**ONKYO U.S.A. CORPORATION**
18 Park Way, Upper Saddle River, N.J. 07458, U.S.A.
Tel: 201-785-2600  Fax: 201-785-2650  http://www.onkyousa.com

**ONKYO EUROPE ELECTRONICS GmbH**
Liegnitzerstrasse 6, 82194 Groebenzell, GERMANY
Tel: +49-8142-4401-0  Fax: +49-8142-4401-555  http://www.onkyo.net

**ONKYO EUROPE UK Office**
Suite 1, Gregories Court, Gregories Road, Beaconsfield, Buckinghamshire, HP9 1HQ
UNITED KINGDOM  Tel: +44-(0)1494-681515  Fax: +44(0)-1494-680452

**ONKYO CHINA LIMITED**
Units 2102-2107, Metroplaza Tower I, 223 Hing Fong Road, Kwai Chung,
N.T., HONG KONG  Tel: 852-2429-3118  Fax: 852-2428-9039

ONKYO
HOMEPAGE
**http://www.onkyo.com/**