Ref.No. : 4652

AV RECEIVER

Service Manual

TX-RZ820

✔ Pre Issue (2017-Apr)
Final Issue (2017-Jul)

CONTENTS

✔ Title Page (This page)
✔ Note for Parts List
✔ Panel
✔ Reset
✔ Amp Diag Mode after Abnormal Conditions
✔ Wi-Fi 5GHz Setting
✔ Model and Destination
✔ Firmware
✔ Check Idling Current
✔ Hookup and Setting
Trouble Shoot
~~Disassembly~~
✔ Schematic Diagram
✔ Exploded View
✔ Appendix

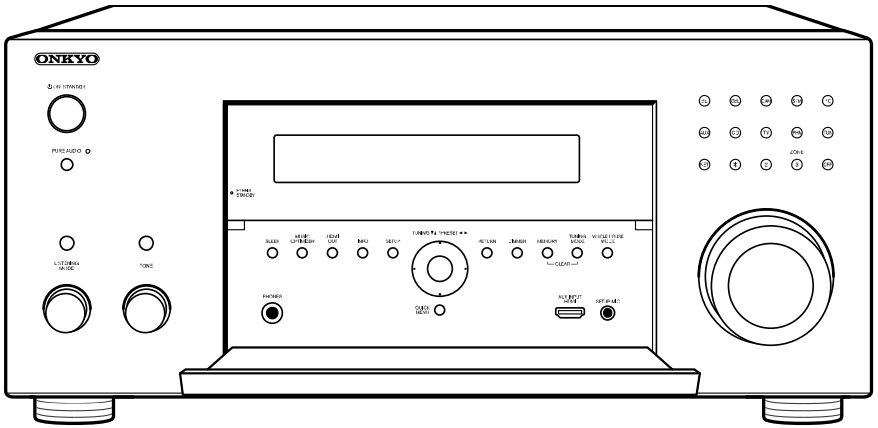

SAFETY-RELATED COMPONENT WARNING!! :
COMPONENTS IDENTIFIED BY MARK ⚠ ON THE SCHEMATIC DIAGRAM AND IN THE PARTS LIST ARE CRITICAL FOR RISK OF FIRE AND ELECTRIC SHOCK. REPLACE THESE COMPONENTS WITH ONKYO PARTS WHOSE PART NUMBERS APPEAR AS SHOWN IN THIS MANUAL. MAKE LEAKAGE-CURRENT OR RESISTANCE MESUREMENTS TO DETERMINE THAT EXPOSED PARTS ARE ACCEPTABLY INSULATED FROM THE SUPPLY CIRCUIT BEFORE RETURNING THE APPLIANCE TO THE CUSTOMER.

Caution:
If Main or Primary fuse enters in the Neutral line of AC Mains supply or if there is possibility of Main or Primary Fuse entering in the Neutral line of AC Mains supply, then AC Mains supply must be disconnected to de-energize the circuit.

This service manual is intended for qualified service technicians; it is not meant for the casual do-it-yourselfer. Qualified technicians have the necessary test equipment and tools, and have been trained to properly and safely repair complex products such as those covered by this manual.
Improperly performed repairs can adversely affect the safety and reliability of the product and may void the warranty. If you are not qualified to perform the repair of this product properly and safely, you should not risk trying to do so and refer the repair to a qualified service technician.

ONKYO®

Published by Onkyo & Pioneer Corporation Grobal CS Department

File Name of Parts List File (EXCEL File)

Note for Parts List

When parts list is EXCEL file, please refer to the following explanation about file name.

PL_TX-SR343(B)MJJ.xlsx

- TX-SR343 — Model No.
- (B) — Color
- J (6 digit) — Destination（仕向地記号）
  Look at the rear panel serial number 6 digit.
  ○○○○○ J ○○○○○○○○○○
- J (5 digit) — Voltage（電圧記号）
  Look at the rear panel serial number 5 digit.
  ○○○○ J ○○○○○○○○○○○

Color（色記号）

(X)	Not related to color		
(B)	Black	(M)	Wood
(BR)	Brown	(O)	Orange
(C)	Cherry	(P)	Pink
(G)	Gold	(R)	Red
(GR)	Green	(S)	Silver
(H)	Gray	(V)	Violet
(K)	Black	(W)	White
(L)	Blue	(Y)	Yellow
(LB)	Light Blue		

Voltage（電圧記号）

D	120V AC
G	220～230V
H	220～230／240V
J	100V AC
M	220～240V AC
P	230V AC
U	100～240V AC
V	110～240V
W	120V／220～240V
Z	※1

Speaker System (without AMP.) :

0	Passive Subwoofer
F	Front Speaker
C	Center Speaker
R	Rear Speaker
B	Back Speaker

Destination（仕向地記号）

A	Australia
B	United Kingdom
C	North American
D	USA
F	Taiwan
J	Japan
K	Korea
L	Russia
P	Europe
Q	Hong Kong
R	China
S	Brazil
T	Thai
U	Worldwide

Speaker System (without AMP.) :

L	Left channel
R	Right channel
0	Center channel

※1 There is a charge function and a power supply (adapter) is needed, but an adapter isn't bundled.
（充電機能があり、電源（アダプタ）を要するが、アダプタを付属しないもの）

Panel

Front Panel

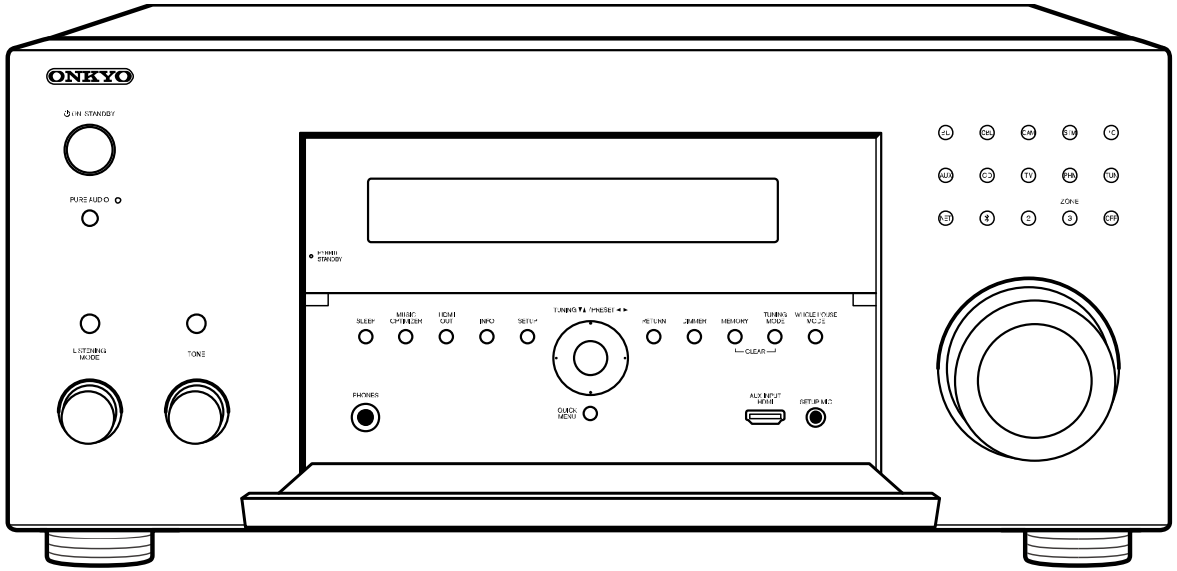

Rear Panel

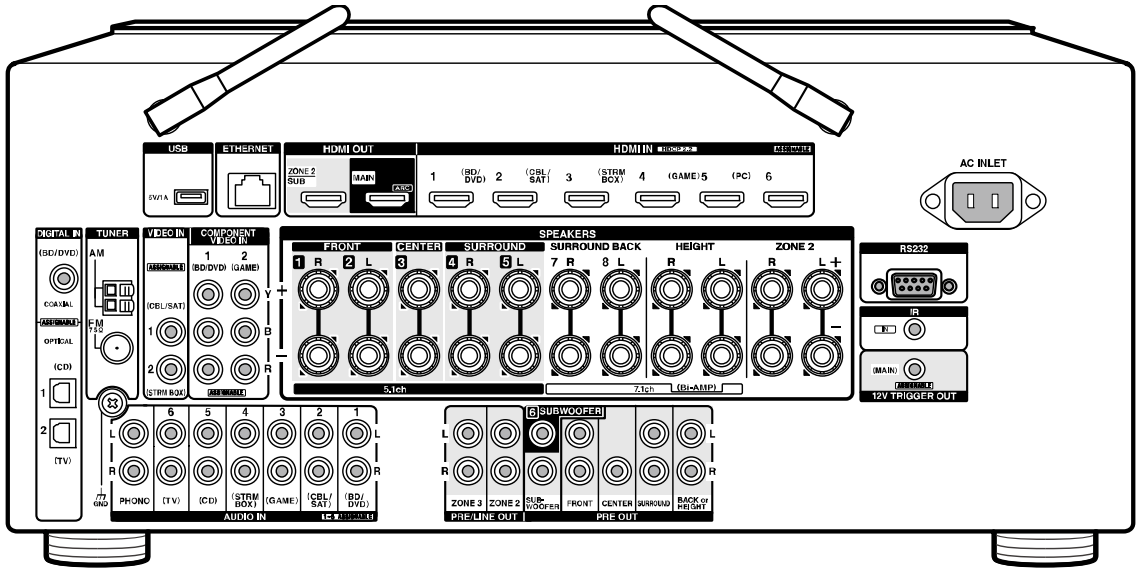

Remote Control Unit
RC-911R

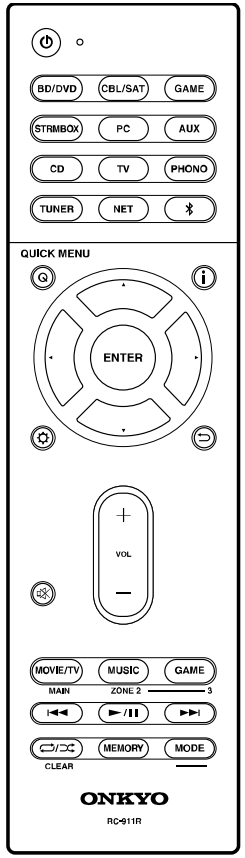

Accessory

1. Remote controller (RC-911R) (1)
2. Batteries (AAA/R03) (2)
3. Speaker setup microphone (1)
4. Indoor FM antenna (1)
5. AM loop antenna (1)
6. Power cord (1)

Reset

【STORE】

[SETUP] + [ENTER] x 2

【RESET】

1. Volume 40
2. [TONE] + [ON/STANDBY] → [RETURN] x 2
3. Unplug the power cord from AVR after the disappeared "All Clear" of FL tube and AVR goes standby.

【RECALL】

[SETUP] + [RETURN] x 2

Detail key operation is here.

Protect Mode

Amp Diag Mode after Abnormal Conditions

The unit goes into standby automatically when detect the abnormal condition of thermal detection, dc voltage detection or current detection. (e.g. TX-NR555 block diagram below)

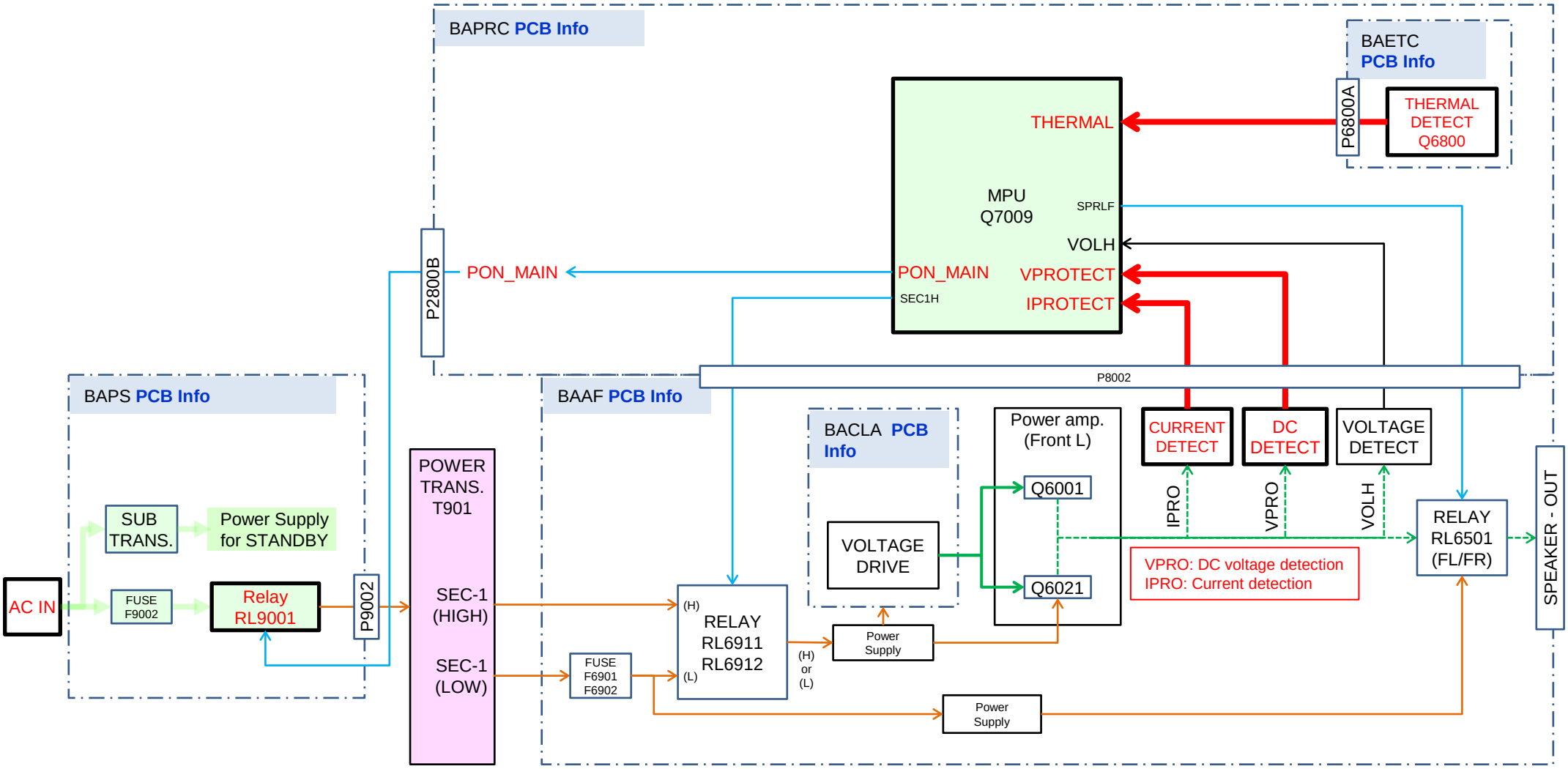

COMMON

PCB Information

Amp Diag Mode after Abnormal Conditions

BAPRC

TX-NR474	BAPRC-2387
TX-NR575E	↑
TX-8270	↑
DTM-7	↑
TX-NR575	BAPRC-2409
DRX-2.1	↑
TX-NR676	↑
TX-NR676E	↑
TX-RZ620	↑
DRX-3.1	↑
HT-R997	↑
TX-NR777	↑
TX-RZ720	↑
TX-RZ820	↑

BAAF

TX-NR474	BAAF-2388
TX-NR575E	↑
TX-8270	↑
DTM-7	↑
TX-NR575	BAAF-1979
DRX-2.1	↑
TX-NR676	↑
TX-NR676E	↑
TX-RZ620	↑
DRX-3.1	↑
HT-R997	↑
TX-NR777	↑
TX-RZ720	↑
TX-RZ820	↑

BAETC

TX-NR474	BAETC-2390
TX-NR575E	↑
TX-8270	↑
DTM-7	↑
TX-NR575	BAETC-1980
DRX-2.1	↑
TX-NR676	↑
TX-NR676E	↑
TX-RZ620	↑
DRX-3.1	↑
HT-R997	↑
TX-NR777	↑
TX-RZ720	↑
TX-RZ820	↑

BAPS

TX-NR474	BAPS-2352
TX-NR575E	BAPS-2361
TX-8270	BAPS-2399
DTM-7	BAPS-2399
TX-NR575	BAPS-1984
DRX-2.1	BAPS-2000
TX-NR676	BAPS-1984
TX-NR676E	BAPS-1984
TX-RZ620	BAPS-1984
DRX-3.1	BAPS-2000
HT-R997	BAPS-1984
TX-NR777	BAPS-1984
TX-RZ720	BAPS-1984
TX-RZ820	BAPS-2031

BACLA

TX-NR474	BACLA-2351
TX-NR575E	BACLA-2360
TX-8270	BACLA-2398
DTM-7	BACLA-2398
TX-NR575	BACLA-1988
DRX-2.1	BACLA-2004
TX-NR676	BACLA-1988
TX-NR676E	BACLA-1988
TX-RZ620	BACLA-1988
DRX-3.1	BACLA-2004
HT-R997	BACLA-1988
TX-NR777	BACLA-1988
TX-RZ720	BACLA-1988
TX-RZ820	BACLA-2030

BATRM

TX-NR474	BAAF-2388
TX-NR575E	↑
TX-8270	↑
DTM-7	↑
TX-NR575	BATRM-2023
DRX-2.1	↑
TX-NR676	↑
TX-NR676E	↑
TX-RZ620	↑
DRX-3.1	↑
HT-R997	↑
TX-NR777	↑
TX-RZ720	↑
TX-RZ820	↑

Self-diagnostics

Amp Diag Mode after Abnormal Conditions

This function is for avoiding the rupture of electrolytic capacitors with amplifier circuit failure during power-ON.

Operation of Self-diagnostic

Self-diagnostic will start at the timing of next power on, after goes to the protect mode by Current detection or DC voltage detection.

Only On/Standby key could work in this mode. Also remote control does not work. However, the CLEAR operation is enabled.

During Self-diagnostic, the power supply for amplifier circuit become low voltage state(SEC1-LOW), and the speaker relay will be turned off. Then, MPU will check each amplifier circuits Internally by entering the test signal (20 kHz,-20 dBFS sine wave) to each channel from DSP.

MPU will judge the amplifier circuit is good or not from VOLH value.

The normal range of VOLH value is 0.04 V < VOLH < 0.20 V.

If VOLH value is in the out of this range, it will be judged as NG (No good).

No problem found

When protected by current detection, and no problem found, "CHECK SP WIRE“ will be displayed.

In this State, Only the On/Standby key is effective. And if do not anything for 3 minutes, unit goes into standby automatically.

When protected by a DC voltage detection, and no problem found, unit goes into normal operation.

Problem found

When judged as there is a problem on any channel, the information of channel that has a problem will be displayed as in the right figure.

In this State, Only the On/Standby key is effective. Also remote control does not work. If do not anything for 3 minutes, unit goes into standby automatically. This state will keep also after unit turn on/off, or AC unplugged.

the power supply for amplifier circuit become low voltage state(SEC1-LOW), and the speaker relay will be turned off.

Display of during Self-diagnostics

2 Line FL tube type

A	M	P		D	i	a	g		M	o	d	e	

1 Line FL tube type

A	M	P		D	i	a	g		M	o	d	e	

“Mode” This part display the channel which is currently checked. (E.g. "[FL]", etc.)

Display of when problem found

2 Line FL tube type

N	G		C	H	:								
			L	C	R	S	L	S	R	B	L	B	R

1 Line FL tube type

N	G	:	L	C	R	S	L	S	R	B	L	B	R

L	→ Front L channel	S	L	→ Surround L channel
C	→ Center channel	S	R	→ Surround R channel
R	→ Front R channel	B	L	→ Surround back L channel
		B	R	→ Surround back R channel

COMMON

Repair Process and How to Confirm

Amp Diag Mode after Abnormal Conditions

Confirmation of the protect cause

While NG channel is displayed, You can confirm the protect cause by following the step below.

1. Press the Enter button
2. The protect cause are displayed for 5 seconds.

Please check the around of those amplifier circuit and repair it.

Protected by current detection

D	E	T	.	P	R	O	T	E	C	T		:	I

Protected by DC Voltage detection

D	E	T	.	P	R	O	T	E	C	T		:	V

Clear of NG CH information

After repair, you can clear NG CH information by following the steps below.

1. Press the On/Standby key while pressing the Enter key.
2. Display as in the right figure appears.
3. Unit goes into Standby automatically after 5 seconds.

Self-diagnostic will start again at the timing of next power on.

By this, You can verify whether repair was properly or not.

If problem found after repair, please re-check the around of its circuit.

Clear of NG CH information

N	G		C	H		C	L	E	A	R			

Cancel of Self-diagnostic

You can cancel this mode by clear operation (press Standby key while pressing CBL/SAT key).

After cancel this mode, receiver will be started as normal operation.

Manual Execution of Self-diagnostic

1. [DIMMER] + [ON/STANDBY] x 2
   Main Firmware Version will appear on the main unit's display.
2. [SETUP] or [HOME]
   Service information will appear on the main unit's display
3. [ENTER]
   Display as in the right figure appears.
4. [STANDBY/ON]
   Unit will go into standby.
5. [STANDBY/ON]
   Unit will turn on. Then self-diagnostic will start automatically.

Manual Execution of Self-diagnostic

A	M	P	D	I	A	G		T	E	S	T	O	N

Amp Diag Mode after Abnormal Conditions

Displaying Service information

This service information display system is helpful in analyze the status when the unit goes into Protect mode and is powered off. Pay attention that the status will change if a button is pushed.

How to enter to service information mode.

Step1 :

[DIMMER] + [ON/STANDBY] x 2

M1.xx / xxxxxAEx

The version of main microprocessor. (displayed only for 3 seconds)

Step2 :

[SETUP] or [HOME]

1 - 80 F 27 DD

History No. : 1 ~ 3 (1 is latest.)

Temperature : xx F or xx C

Volume Level

Listening Mode Please see the "Listening Mode code list" on the next page.

Power off Cause
T : Thermal Protect
V : Voltage Protect
I : Current Protect
- : Other

Step3 :

[SETUP] or [HOME]

1 01: 23 10h

Information Displayed (Record this Information)

History No. : 1 ~ 3 (1 is latest.)

Time after Power on xx : xx

Cumulative operation time after Reset : xx h

Note)

If press [ENTER] during service information mode, the following display will appear. And Self-diagnostic will start at when next turn on.

A M P D I A G T E S T O N

How to change History No. 1 ~ 3.

[CURSOR UP] or [CURSOR DOWN]

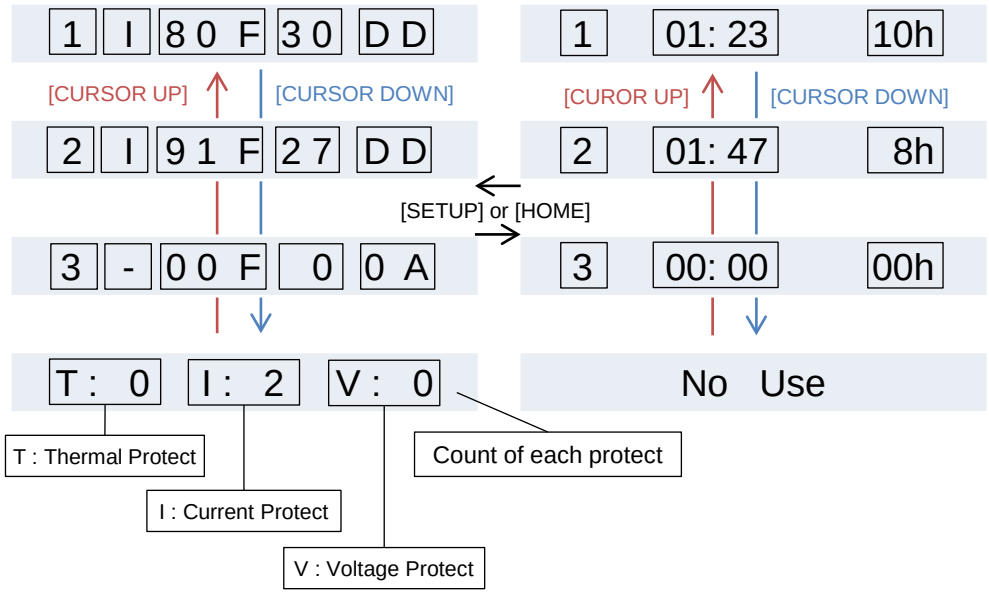

How to exit the service information mode.

[ON/STANDBY]

Normal display

[RETURN] (to initialize the data in the service information.)

Protect Data CLR

↓

Normal display

Listening Mode Code List

00	NORMAL_LMD_BEGIN
01	LAST
02	PURE
03	DIRECT
04	STEREO
05	MONO
06	ORCHESTRA
07	UNPLUGGED
08	STUDIOMIX
09	TVLOGIC
0A	ALLCHST
0B	FULLMONO
0C	TD
0D	RPG
0E	ACTION
0F	ROCKBAND
10	SPORTS
11	WHOLEHOUSE
12	RPG_GENRE
13	ACTION_GENRE
14	ROCKBAND_GENRE
15	SPORTS_GENRE
12	NORMAL_LMD_END

20	SURR_LMD_BEGIN
21	SURR_20_PLII_MOVIE
22	SURR_20_PLII_MUSIC
23	SURR_20_PLII_GAME
24	SURR_20_PLIIX_MOVIE
25	SURR_20_PLIIX_MUSIC
26	SURR_20_PLIIX_GAME
27	SURR_20_PLIIZ
28	SURR_20_NEO6_MOVIE
29	SURR_20_NEO6_MUSIC
2A	SURR_20_NEURAL_MUSIC
2B	SURR_20_NEURAL_CINEMA
2C	SURR_51_OFF
2D	SURR_51_MTR
2E	SURR_51_DSC
2F	SURR_51_NEO6
30	SURR_51_EX
31	SURR_51_PLIIX_MOVIE
32	SURR_51_PLIIX_MUSIC
33	SURR_51_PLIIZ
34	SURR_51_NEURAL_CINEMA
35	SURR_20_NEOX_CINEMA
36	SURR_20_NEOX_MUSIC
37	SURR_20_NEOX_GAME
38	SURR_51_NEOX_CINEMA
39	SURR_51_NEOX_MUSIC
40	SURR_51_NEOX_GAME
41	SURR_20_DOLBY_SURR
42	SURR_51_DOLBY_SURR
43	SURR_LMD_END

48	DTSSS_LMD_BEGIN
49	DTSSS_20_NEO6_MUSIC
4A	DTSSS_20_NEO6_CINEMA
4B	DTSSS_51
4C	DTSSS_LMD_END

50	THX_MUSIC_LMD_BEGIN
51	THX_20_PLII_MUSIC
52	THX_20_PLIIX_MUSIC
53	THX_20_PLIIZ_MUSIC
54	THX_20_NEO6_MUSIC
55	THX_20_NEURAL_MUSIC
56	THX_51_OFF_MUSIC
57	THX_51_MTR_MUSIC
58	THX_51_DSC_MUSIC
5A	THX_51_PLIIX_MUSIC
5B	THX_51_PLIIZ_MUSIC
5C	THX_51_NEO6_MUSIC
5D	THX_51_NEURAL_MUSIC
5E	THX_20_NEOX_MUSIC
5F	THX_51_NEOX_MUSIC
60	THX_20_DOLBY_SURR_MUSIC
61	THX_51_DOLBY_SURR_MUSIC
62	THX_MUSIC_LMD_END

70	THX_GAME_LMD_BEGIN
71	THX_20_PLII_GAME
72	THX_20_PLIIX_GAME
73	THX_20_PLIIZ_GAME
74	THX_20_NEURAL_GAMES
75	THX_51_OFF_GAMES
76	THX_51_MTR_GAMES
77	THX_51_DSC_GAMES
78	THX_51_PLIIX_GAME
79	THX_51_PLIIZ_GAMES
7A	THX_51_NEO6_GAMES
7B	THX_51_NEURAL_GAMES
7C	THX_20_NEOX_GAMES
7D	THX_51_NEOX_GAMES
7E	THX_20_DOLBY_SURR_GAME
7F	THX_51_DOLBY_SURR_GAME
80	THX_GAME_LMD_END

90	THX_CINEMA_LMD_BEGIN
91	THX_20_PLII_MOVIE
92	THX_20_PLIIX_MOVIE
93	THX_20_PLIIZ_CINEMA
94	THX_20_NEO6_MOVIE
95	THX_20_NEURAL_CINEMA
96	THX_51_OFF_CINEMA
97	THX_51_MTR_CINEMA
98	THX_51_DSC_CINEMA
99	THX_51_NEO6_CINEMA
9A	THX_51_PLIIX_MOVIE
9B	THX_51_PLIIZ_CINEMA
9C	THX_51_NEURAL_CINEMA
9D	THX_51_EX
9E	THX_20_NEOX_CINEMA
9F	THX_51_NEOX_CINEMA
A0	THX_20_DOLBY_SURR_CINEMA
A1	THX_51_DOLBY_SURR_CINEMA
A2	THX_CINEMA_LMD_END

B0	THX_U2GAME_LMD_BEGIN
B1	THX_20_PLII_SLCT2_GAME
B2	THX_20_PLIIZ_SLCT2_GAME
B3	THX_51_SLCT2_GAM
B4	THX_51_PLIIZ_SLCT2_GAME
B5	THX_U2GAME_LMD_END

B6	THX_U2MUSIC_LMD_BEGIN
B7	THX_51_SLCT2_MUS
B8	THX_51_PLIIZ_SLCT2_MUSIC
B9	THX_U2MUSIC_LMD_END

BA	THX_U2CINEMA_LMD_BEGIN
BB	THX_51_SLCT2_CIN
BC	THX_51_PLIIZ_SLCT2_CINEMA
BD	THX_U2CINEMA_LMD_END

D0	AUDYSSEY_LMD_BEGIN
D1	AUDYSSEY_20_PLII_MUSIC
D2	AUDYSSEY_20_PLIIX_MUSIC
D3	AUDYSSEY_20_NEO6_MUSIC
D4	AUDYSSEY_20_NEURAL_CINEMA
D5	AUDYSSEY_20_NEURAL_MUSIC
D6	AUDYSSEY_20_PLII_MOVIE
D7	AUDYSSEY_20_PLIIX_MOVIE
D8	AUDYSSEY_20_NEO6_MOVIE
D9	AUDYSSEY_20_PLII_GAME
DA	AUDYSSEY_20_PLIIX_GAME
DB	AUDYSSEY_51_OFF
DC	AUDYSSEY_51_PLIIX_MUSIC
DD	AUDYSSEY_51_PLIIX_MOVIE
DE	AUDYSSEY_51_NEO6
DF	AUDYSSEY_51_NEURAL_CINEMA
E0	// AUDYSSEY_51_NEURAL_MUSIC
E1	AUDYSSEY_51_EX
E2	AUDYSSEY_LMD_END

F0	SPECIAL_LMD_BEGIN
F1	TESTTONE
F2	TESTTHR
F3	TESTAUTO
F4	ASC
F5	FLASH
F6	DEBUGMODE
F7	FLASH2
F8	FLASH3
F9	FLASH4
FA	FLASH_CHECK
FB	SPECIAL_LMD_END

IMPORTANT!!

Back Ground:

It is totally different from Radio Law at the each country on 5GHz band.

It means it is totally different from enabled Channel of 5GHz band at the each country.

We define the "Country Code" for 5GHz band.

You must set up the appropriate country code to the product.

Example;

Case1:

When you use the "P" destination products and bring move to Russia or Israel,

If you did not setup change country code and use in Russia and Israel,

You will be on the illegal Radio Law in Russia and Israel.

Case2;

When you use "C" or "D" destination product bring move to Japan or Taiwan,

If you did not setup change country code and use in Japan and Taiwan,

You will be on the illegal Radio Law in Japan and Taiwan.

Service Parts information:

The default country code is set on "Processing Circuit Board(PRC board)".

You must make sure and set up the "Country Code" when you replace the processing circuit pc board.

Otherwise You and your customer should be on the illegal Radio Law and

IT HAS POSSIBILITY TO HAVE A RISK OF PUNISHMENT FROM EACH COUNTRY GOVERNMENT.

If you did not make sure country code and no setup code and face any trouble,

We does not have any responsibility.

For setting up the Country Code,

Please ask the procedure of changing country code to your distributer or our sales.

It is no described the procedure of changing Country Code on this Service Manual

If you have any trouble of unclear procedure for update country code,

Please contact our sales department.

PRC Board Default Value of Country Code

The PRC board is already set default Country Code by the representative destination. To confirm the default country code, Please refer to the "How to read PRC Board part number and Default value of Country Code" section.

Figure Country List (need to set up)

IMPOTANT!!

Make sure and Setup Country Code

You have to make sure country code for using or replacing "Processing Circuit PC Board".

It means that you have to make sure country code between using Processing Circuit PC board(PRC Board) and your customer's country code.

When it is not match PRC board default country code and customer's country, you have to setup Country Code.

Case3;

When you repair the "P" destination products and replace "P" destination PRC Board and the customer live in UK, It is no necessary to setup Country Code

Because "P" destination PRC board already setup "EU" country code.

Match Country code

NO NECESSARY TO SETUP COUNTRY CODE

Case4;

When you repair the "P" destination products and replace "P" destination PRC board and the customer live in Russia, It is necessary to setup Country Code

Because "P" destination PRC Board already setup "EU" country code.

However, the customer's country code is "RU". It means no match PRC Board code and Customer's code.

No Match Country code

NECESSARY TO SETUP COUNTRY CODE

Case5;

When you repair the "C" destination products and replace "C" destination PRC board and the customer live in US, it is no necessary to setup Country Code

Because "C" destination PRC board already setup "US" country code.

Match Country code

NO NECESSARY TO SETUP COUNTRY CODE

Case6;

When you repair the "C" destination product and replace "C" destination PRC board and the customer live in Taiwan, It is necessary to setup Country Code.

Because "C" destination PRC Board already setup "US" country code as default.

However, the customer's country code is "TW". It means no match PRC Board code and the customer's country code

No Match Country code

NECESSARY TO SETUP COUNTRY CODE

Wireless LAN 5GHz Country Code 1/2

Region	Country	Code
America	USA	US
	Canada	US
	Mexico	US
	Brazil	US
	Chile	CL
	Guatemala	US
	Puerto Rico	US
	Trinidad	TT
	Dominican Rep	US
	Argentina	AR
	Ecuador	US
	Paraguay	PY
	Colombia	US
	Guam	US
	Panama	US
	Costa Rica	US
	Uruguay	UY
	Peru	PE

Region	Country	Code
Asia / Oceania	Japan	JP
	China	CN
	Hong Kong	EU
	Korea	KR
	Taiwan	TW
	Singapore	SG
	Malaysia	MY
	Philippines	EU
	Vietnam	EU
	Indonesia	ID
	Sri Lanka	EU
	Australia	AU
	New Zealand	AU
	Thailand	EU
	India	IN
	Pakistan	PK

Region	Country	Code
Middle East	UAE	EU
	Bahrain	BH
	Kuwait	KW
	Oman	EU
	Qatar	QA
	Lebanon	EU
	Jordan	JO
	Saudi Arabia	EU

Wireless LAN 5GHz Country Code 2/2

Region	Country	Code
Europe / Africa	Germany	EU
	UK	EU
	France	EU
	Netherlands	EU
	Italy	EU
	Switzerland	EU
	Denmark	EU
	Sweden	EU
	Austria	EU
	Belgium	EU
	Spain	EU
	Norway	EU
	Finland	EU
	Czech	EU
	Israel	IL
	Ukraine	EU
	Hungary	EU
	Slovakia	EU
	Luxembourg	EU
	Turkey	EU
	Portugal	EU
	Malta	EU
	Latvia	EU
	Poland	EU

Region	Country	Code
Europe / Africa	Cyprus	EU
	Estonia	EU
	Slovenia	EU
	Bulgaria	EU
	Greece	EU
	Romania	EU
	Lithuania	EU
	Serbia	EU
	Croatia	EU
	Ireland	EU
	Macedonia	EU
	Moldova	EU
	Russia	RU
	Andorra	EU
	Armenia	EU
	Azerbaijan	EU
	Belarus	EU
	Bosnia and Herzegovina	EU
	Northern Cyprus(Turkey)	EU
	Georgia	EU
	Iceland	EU
	Kazakhstan	EU

Region	Country	Code
Europe / Africa	Liechtenstein	EU
	Monaco	EU
	Montenegro	EU
	San Marino	EU
	Vatican City	EU
	Kosovo	EU
	Kaliningrad(Russia)	RU
	Gibraltar(UK)	EU
	Canary Islands(Spain)	EU
	Ceuta	EU
	Melilla	EU
	Morocco	MA
	Algeria	EU
	Tunisia	TN
	Egypt	EG
	Mauritius	US
	South Africa	EU

How to read PRC Board part number and Default value of Country Code

WiFi 5GHz Setting

1B5142387-1A575MDC

Board No.

Suffix No.

Model Number Last 3 Digit

575 : TX-NR575
75E : TX-NR575E
676 : TX-NR676
76E : TX-NR676E
777 : TX-NR777
997 : HT-R997
620 : TX-RZ620
720 : TX-RZ720
820 : TX-RZ820

Destination

PRC Board Default setting Country Code

Dst	Code	Main Country
C	**US**	North America
D	**US**	United State
S	**US**	Brazil
P	**EU**	Europe
B	**EU**	United Kingdom
Q	**EU**	Hong Kong
T	**EU**	Thai
L	**RU**	Russia
A	**AU**	Australia / New Zealand
R	**CN**	China
F	**TW**	Taiwan
K	**KR**	Korea
J	**JP**	Japan

COMMON

Model and Destination

1. [TV] + [ON/STANDBY]
2. [DIMMER]
3. Rotate [TONE] x5

Model Name	Distination	FL Display													
TX-RZ820	DC	R	Z	8	2	0			D	C		0	6	0	0
TX-RZ820	xx	R	Z	8	2	0			x	x		0	6	1	0
TX-RZ820	xA	R	Z	8	2	0			x	A		0	6	4	0
TX-RZ820	xR	R	Z	8	2	0			x	R		0	6	5	0
TX-RZ820	JJ	R	Z	8	2	0			J	J		0	6	2	0

How to check Firmware Version & Preparation of Update

Step1 : [DIMMER] + [ON/STANDBY] x 2

Main Firmware Version will appear on the main unit's display.

Step2 : [TONE +1] (Rotate "TONE" knob right 1 click)

NET Firmware Version will appear on the main unit's display.

Step3 : [TONE +2] (Rotate "TONE" knob right 2 click)

DSP Firmware Version will appear on the main unit's display.

Step4 : [TONE +3] (Rotate "TONE" knob right 3 click)

Video Firmware Version will appear on the main unit's display.

Step5 : [TONE +4] (Rotate "TONE" knob right 4 click)

OSD Firmware Version will appear on the main unit's display.

Step6 : [TONE +5 over] (Rotate "TONE" knob right 5 click over)

Return to Display Main Firmware Version (Return Step1)

When It is rotated left (-) TONE knob, It is appeared before step.

[Preparation of Update]

1. Connect the USB storage device to your PC. If there is any data in the USB storage device, remove it.
2. Download the firmware file (package file) from the Onkyo FTP-server. However European service partners should download the firmware file (package file) from the ExtraNet.

   Onkyo FTP-server: ftp://manex.onkyo.co.jp/
   ID and Password are those we informed when changed.
   Filename is as follows: ONKAVR0025**********.zip

   Unzip the downloaded file. A following file is created.

   ONKAVR0025**********.of0
   ONKAVR0025**********.of1
   ONKAVR0025**********.of2
   ONKAVR0025**********.of3
   ONKAVR0025**********.of4

3. Copy it to the USB storage device. Be careful not to copy the zip file.

4. Remove the USB storage device from your PC.

How to Update (service mode) 1/2

Overwriting is also possible.

1. Connect the USB strage to the USB port on the unit.

2. Turn on the unit. It takes some time to start after you switch on the unit.

   Press: [DIMMER] + [ON/STANDBY] x 2

3. Press [RETURN] button, Then it is displayed as below

If you need each module of the firmware update, you can select the module by pressing PRESET < and > button.

If you need change source NET or USB, you can select the source by pressing TUNING UP and Down key

It should be updated firmware by selecting USB -> ALL normally.

Please Do NOT choose T-SRV (it is test server)

USB -> ALL: ALL firmware update (default)

USB -> DSP1: DSP firmware update

USB -> OSD: OSD firmware update

USB -> VMPU: VMPU firmware update

USB -> NET: NET firmware update

USB -> MMPU: Main MPU firmware update

USB -> WORK: Compare between AVR and USB, Only update new version firmware

NET -> ALL: ALL firmware update (default)

NET -> DSP1: DSP firmware update

NET -> OSD: OSD firmware update

NET -> VMPU: VMPU firmware update

NET -> NET: NET firmware update

NET -> MMPU: Main MPU firmware update

NET -> WORK: Compare between AVR and MMC,

Only update new version firmware by network

The default setting is " ALL"

CAUTION: When you will update each module firmware, you have to keep combination of firmware.

How to Update (service mode) 2/2

4. Press [ENTER] button. Start update firmware.

5. Wait until update is completed. When the update ends, “Completed!” is displayed. When “ Completed!” message appeared, you can power off by pressing “ ON/STANDBY” button. (If you leave it, it automatically turns standby mode.)

6. Press [ON/STANDBY] button, and the unit turns on.

7. Check the new FW version number.

<Note>

If the procedure might not be successful, please select “USB -> ALL”.

How to Check Idling Current

a.**Idling Pre-check**

Channel	FL,FR,C,SL,SR,SBL,SBR
Terminals	P6021,P6022,P6023,P6025,P6026,P6027,P6028

*Connect 1/4W 100 ohms resisters in each probe of multi mater .
*Make sure from 1mV to 21mV, When it is not this range, you have to make sure again repair.

b.Aging

The AVR is turned on about 6 minutes for aging.

c.Idling After-check

*Equip series 1/4W 100-ohm resisters near the terminal respectively in each pole of the jig used for the above mentioned terminals.
*If the measured value are under 1 mV or over 21 mV, turn off the power of the AVR and rework the AVR.

*Connect 1/4W 100 ohms resisters in each probe of multi mater .
*Make sure from 1mV to 21mV, When it is not this range, you have to make sure again repair.

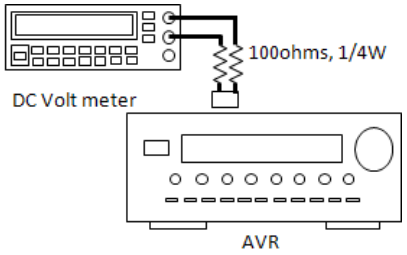

No Sound

■ No sound from connected player

☐ Chose input selector which is assigned to connected input terminal ?

☐ Isn't muting on ?

■ No sound from connected TV

☐ Chose wrong input selector ?

☐ Connect to this model's HDMI OUT terminal from TV by HDMI cable ?

☐ When TV supports ARC function, connect to his model's HDMI OUT terminal from TV's HDMI input terminal for ARC function ?

☐ When TV doesn't support ARC function, connect TV to this model with optical cable etc. ?

☐ Isn't muting on ?

■ No sound from some connected loudspeaker(s)

☐ No sound loudspeaker(s) config is enabled ?

■ No sound from all connected TV or Blu-ray player etc.

☐ After chose loudspeaker volume level setting, test tone is OK ?

■ No problem about above items

☐ Unplug power cord
After 10 seconds, connect power cord again

☐ Reset this model

No Picture

■ In general

☐ Connection cable is bent , twisted or damaged ?

☐ Input is switched on TV ?

■ No picture from connected player by HDMI input terminal

☐ Chose input selector which is connected to player ?

☐ Listening mode is not Pure Audio ?

☐ Don’t use HDMI-DVI adaptor. From personal computer ?

■ No picture from connected player by component video terminal

☐ Output to TV connected to component video out terminal from player's picture connected to the composite video input terminals ?

■ No problem about above items

☐ Unplug power cord

After 10 seconds, connect power cord again

☐ Reset this model

No Power

■ In general

☐ Doesn't be connection cable bent, be it twisted and be it damaged?

■ There is time when indication on the front panel doesn't just light up.

☐ Please check the connecting cord of a DISPLAY PCB.

■ No problem about above items

☐ Unplug power cord

After 10 seconds, connect power cord again

☐ Reset this model

Schematic Diagram

PART-1 BLOCK DIAGRAM(Analog Audio)

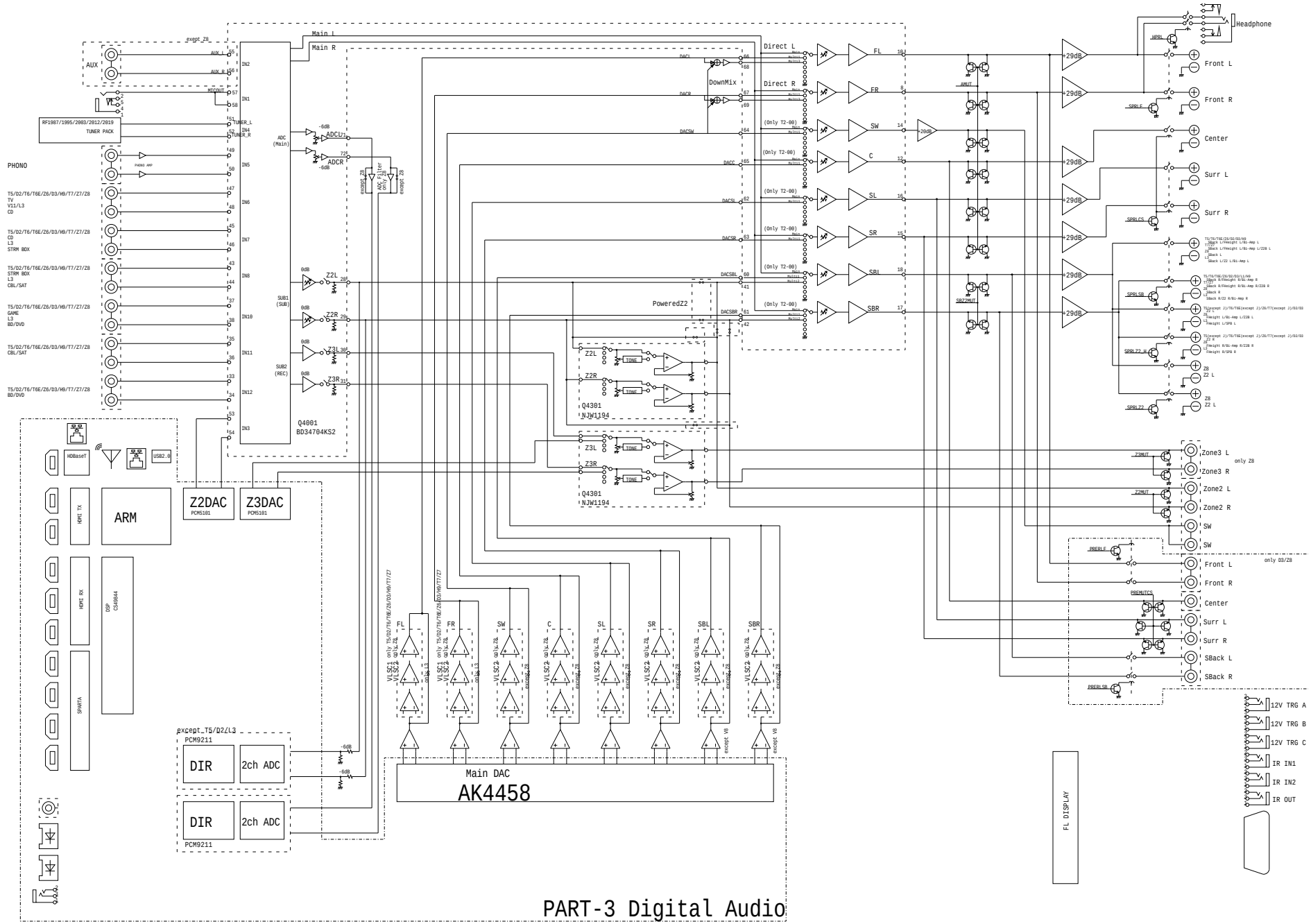

PART-3 Digital Audio

TX-RZ820

PART-2 BLOCK DIAGRAM(Video)

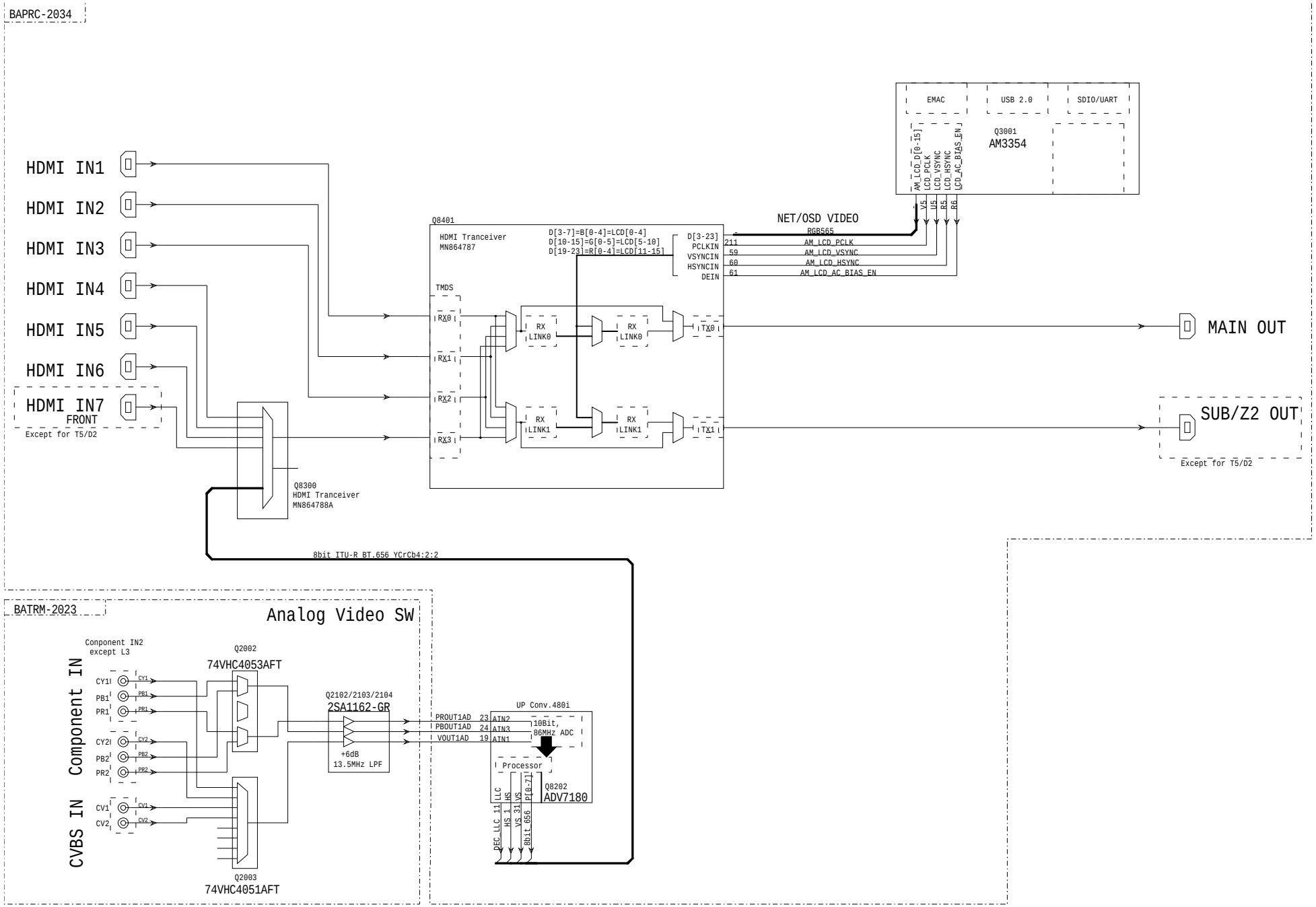

PART-3 BLOCK DIAGRAM(Digital Audio)

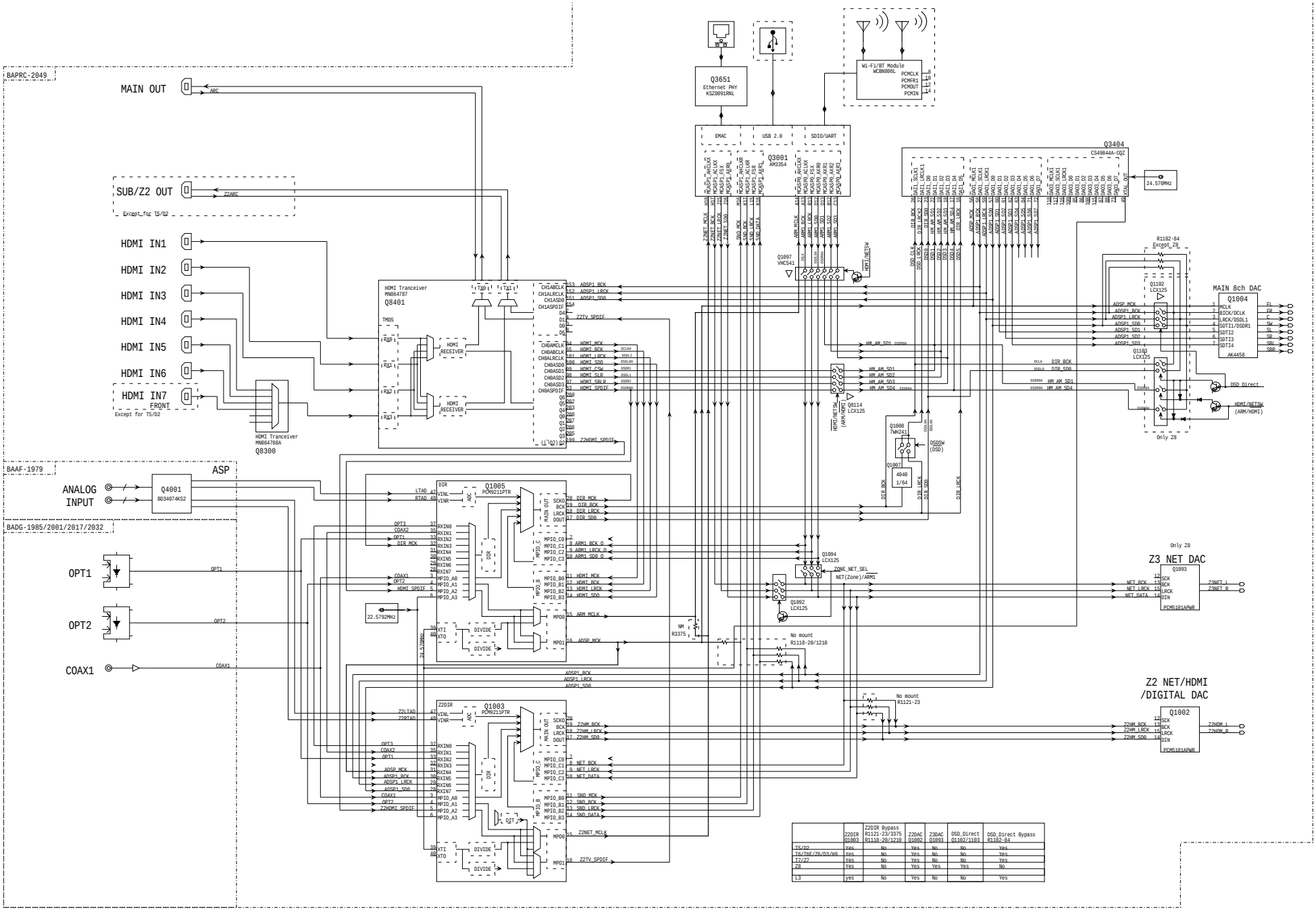

	Z2DIR Q1003	Z2DIR Bypass R1121-23/3375 R1118-20/1210	Z2DAC Q1002	Z3DAC Q1093	DSD_Direct Q1102/1103	DSD_Direct Bypass R1182-84
T5/D2	Yes	No	Yes	No	No	Yes
T6/T6E/Z6/D3/H9	Yes	No	Yes	No	No	Yes
T7/Z7	Yes	No	Yes	No	No	Yes
Z8	Yes	No	Yes	Yes	Yes	No
L3	yes	No	Yes	No	No	Yes

PART-4 ASP SECTION

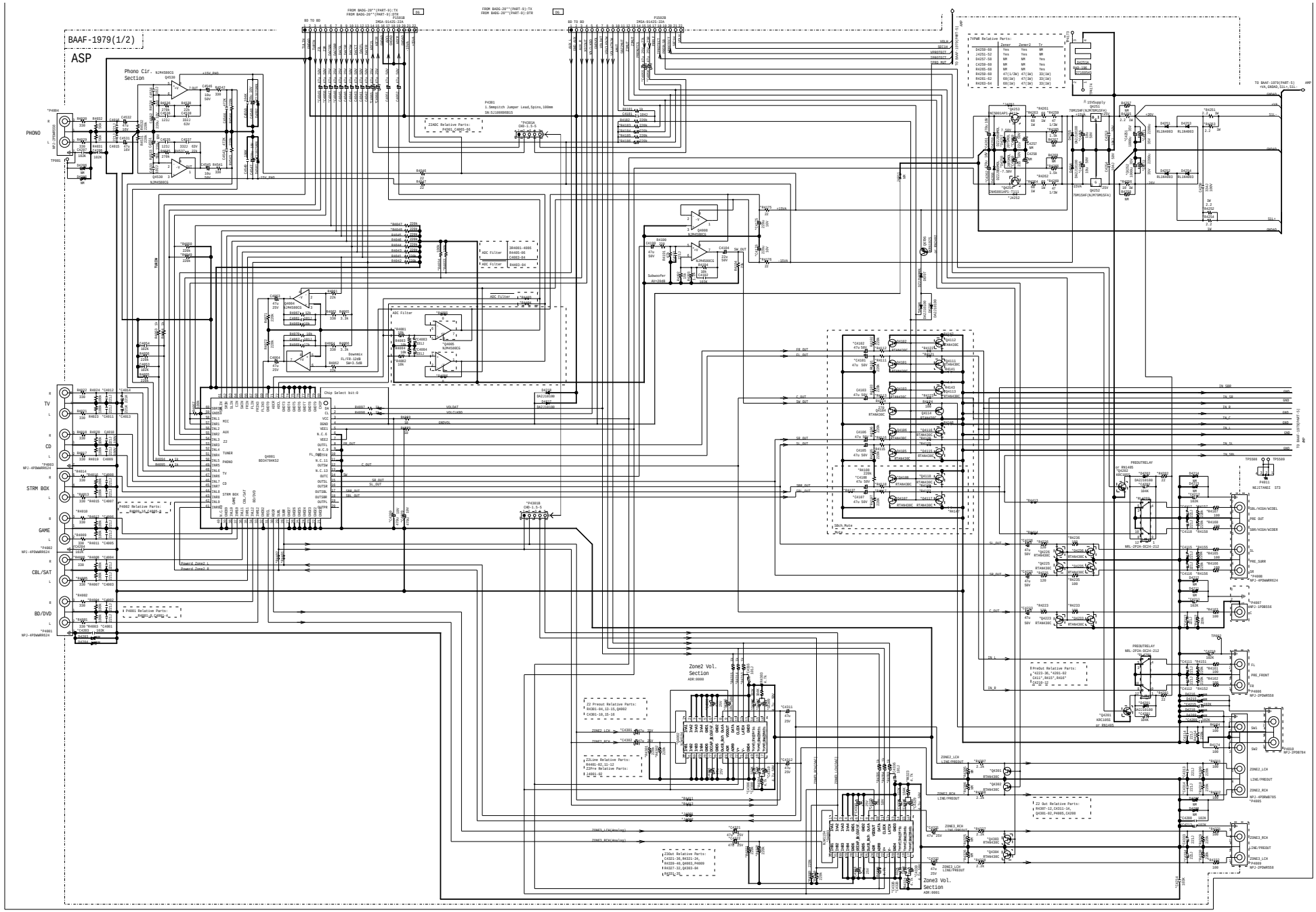

PART-4 AMP SECTION

Schematic Diagram

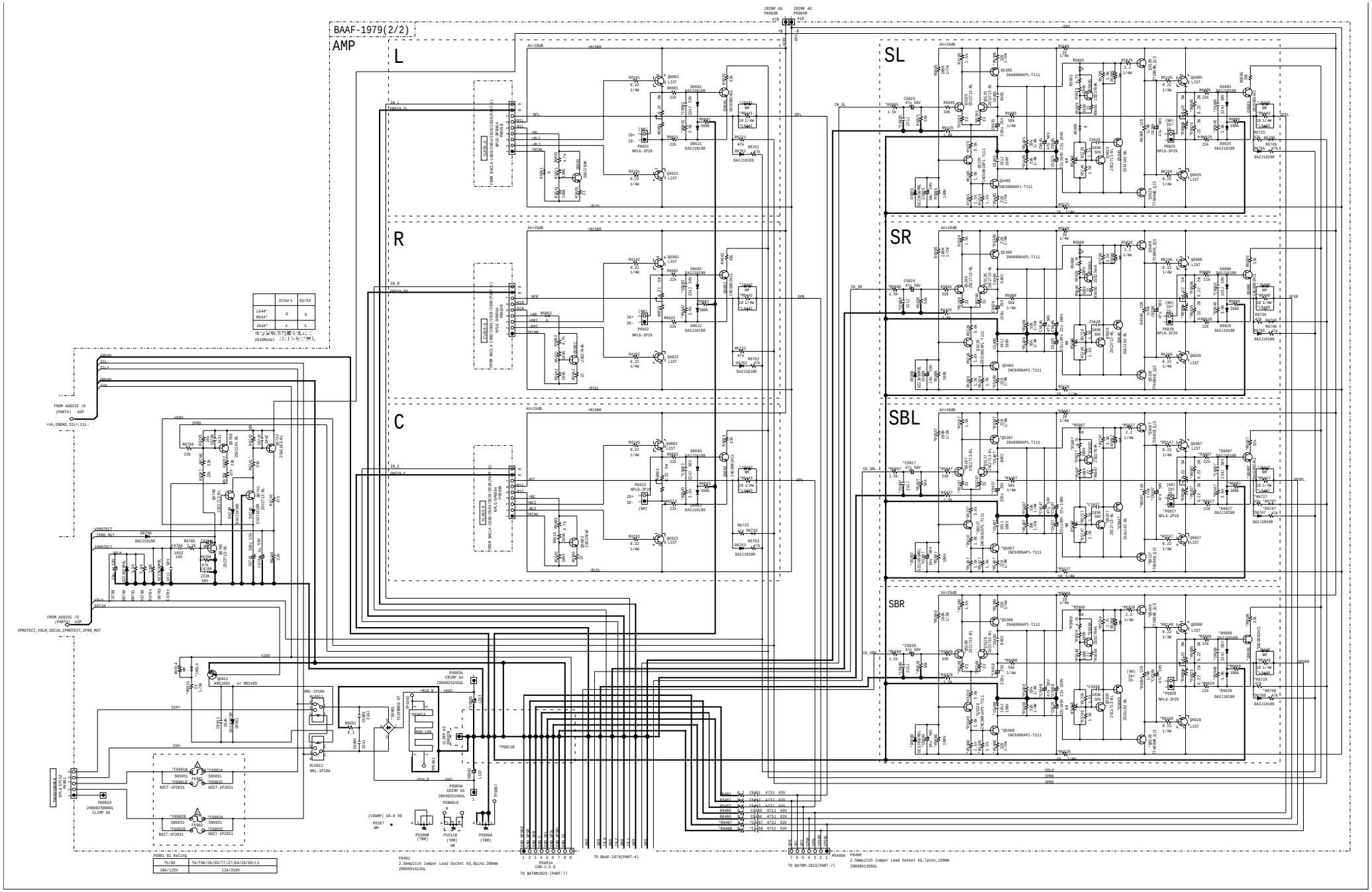

	Others	EU/EX
L644*	O	O
R644*		
J644*	X	X

F6901-02 Rating	
TS/D2	T6/T6E/E6/D3/T7/27/D4/ZB/D5/L3
10A/125V	12A/250V

PART-4 Destination List of BAAF-1979

Functions	Cir.No/Group	T5	D2	T6/T6E /H9	Z6	D3	T7	Z7	Z8	L3
Input Terminal	Terminal Color	Silver	Gold	Silver		Gold	Silver		Silver	Silver
	P4001,P4002 Relatives	Mount P4001 and P4002 Relatives								Mount P4002 Relatives
	P4001,P4002	25045845	25045812	25045845		25045812	25045845		25045845	25045845
	C4011-12,C4013-14	C4011-12								C4013-14
AUX Audio Input	R4033,R4034	Mount							NM	Mount
Mute	SBch_Mute	Mount								Mount
	R4111-13,15-18	2.2k				120	2.2k		120	2.2k
	R4112-23,25-28	0				100	0		100	0
	Q4112-23,25-28	NM				Mount	NM		Mount	NM
Pre Out	P4006	NM				25045803	NM		25045776	NM
	P4007	NM				25045998	NM		25045774	NM
	P4008	NM				25045812	NM		25045845	NM
Z2Pre/Line	Z2Out Relatives	Mount								Mount
	P4010,C4215	NM								NM
	Z2Line Relatives	Mount	NM	Mount	NM		Mount	NM		NM
	Z2Pre Relatives	NM	Mount	NM	Mount		NM	Mount		Mount
	Z3Vol Relatives	NM							Mount	NM
ADC Filter		ADC Filter							ADC Filter	ADC Filter
Z2ADC	Relatives	NM						Mount		NM
15VPWR	R4251-54	2.2 1W (*Z7/D4M:0.22 1/2W)							0.22 1/2W	2.2 1W
	R4256	10 1W							2.2 1W	10 1W
	C4271-72	1000uF35V							2200uF35V	1000uF35V
7VPWR Relatives		Zener	Zene2	Transistor						Transistor
Amp	SBL/SBR C4047-48,R4047-48	Mount								Mount
Block Cap	C6901-02	3504506 6800u 63V	3504525A 8200u 69V	3504519A 8200u 69V	3504534 10000u 71V	3504525A 8200u 69V	3504539 10000u 75V	3504540 10000u 75V	3504535 15000u 75V	3504525A 8200u 69V
Power Tr	Q6001-03	2SC5198		2SC5242					TTC0001	2SC5242
	Q6021-23	2SA1941		2SA1962					TTA0001	2SA1962
	Q6005-08	2SC5198		KTC5242A			2SC5242		TTC0001	KTC5242A
	Q6025-28	2SA1941		KTA1962A			2SA1962		TTA0001	KTA1962A
AMP Emittor Resistor	R6005-08,R6025-28	Mount					NM			Mount
	R6085-88	NM					Mount			NM
IPRO	R664*	3.9k		2.2k					1.8k	2.2k
Heatsink	D6901A	27160545					27160500			27160545
BUS Plate	27142306A	NM					Mount			NM

Model name	Abbreviated Model Name
TX-NR575	T5
DRX-2.1	D2
TX-NR676	T6
TX-NR676E	T6E
HT-R997	H9
TX-RZ620	Z6
DRX-3.1	D3
VSX-LX302	L3
TX-NRZ77	T7
TX-RZ720	Z7
TX-RZ820	Z8

Destination List of BAAF-1979

PART-4 THERMAL SENSOR SECTION

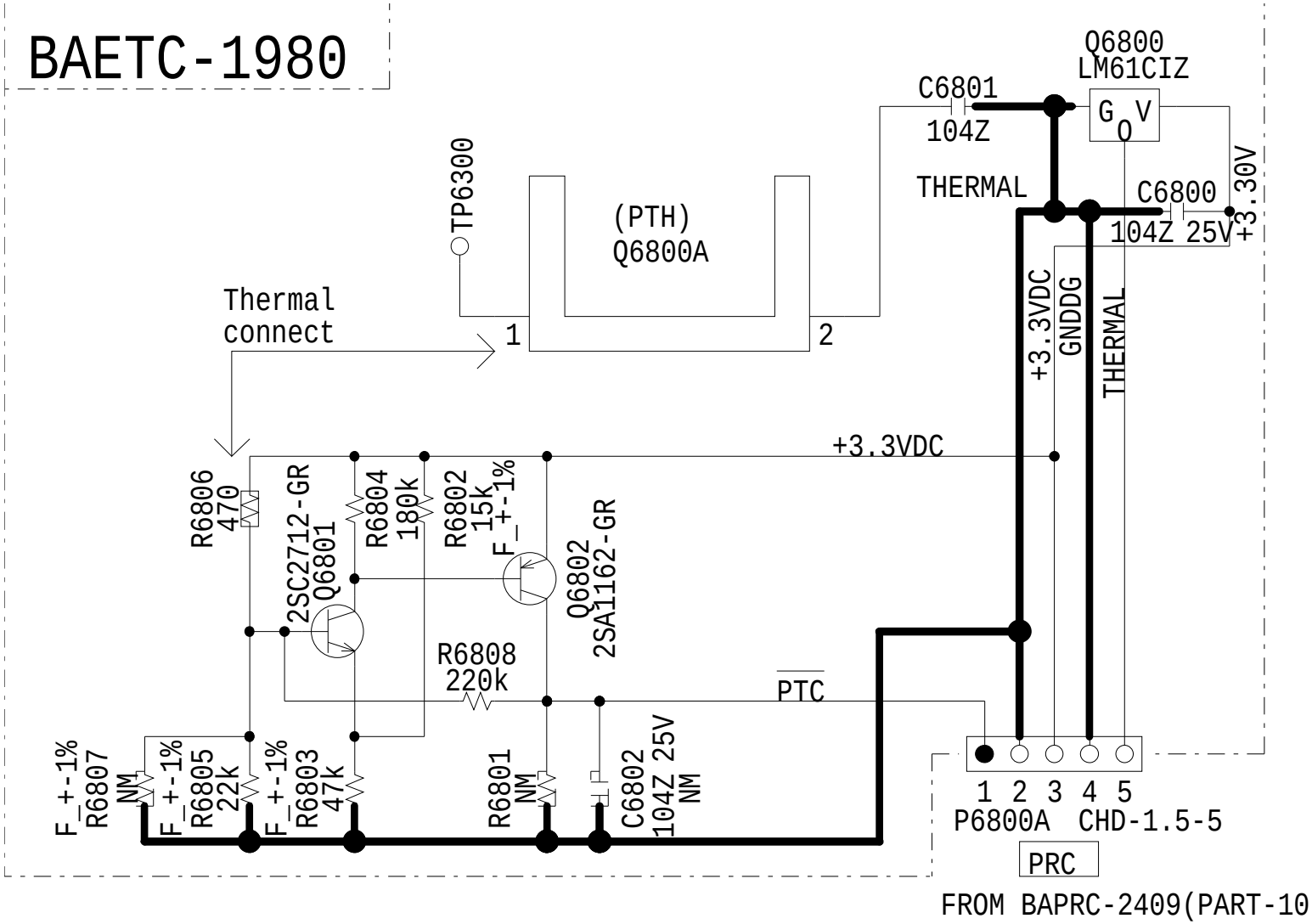

Schematic Diagram

PART-5 AMP SECTION

~~BACLA-1988-2~~
~~BACLA-2004-2~~
BACLA-2030-2
~~BACLA-2020-2~~

CLASS A

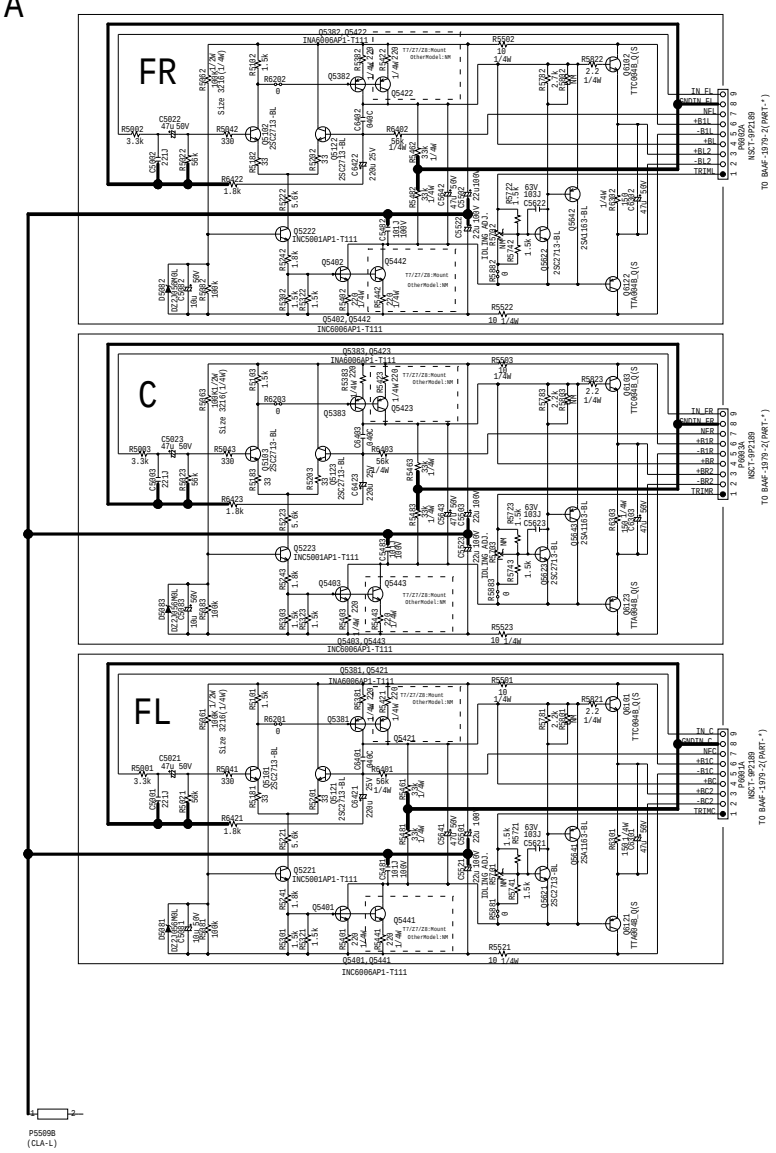

Model name	Abbreviated Model Name
TX-NR575	T5
DRX-2.1	D2
TX-NR676	T6
TX-NR676E	T6E
HT-R997	H9
TX-RZ620	Z6
DRX-3.1	D3
VSX-LX302	L3
TX-NRZ77	T7
TX-RZ720	Z7
TX-RZ820	Z8

Destination table

Reference Number	MODEL T5/D2/T6/T6E/Z6/L3/H9	MODEL T7/Z7	MODEL D3	MODEL Z8
R500*	1.5kΩ		3.3kΩ (Product enabled Model)	
R538* R540*	220Ω			
R542* R544*	No Mount	220Ω	No Mount	220Ω
R546* R548*	39kΩ	33kΩ	39kΩ	33kΩ
R630*	150Ω			
Q542* Q544*	No Mount	Mount	No Mount	Mount

PS SECTION

Schematic Diagram

PS SECTION

	MODEL
T5	TX-NR575
T6	TX-NR676,TX-NR676E,HT-R997
Z6	TX-RZ620
T7	TX-NR777
Z7	TX-RZ720
Z8	TX-RZ820
D2	DRX-2.1
D3	DRX-3.1
L3	VSX-LX302

THE COMPONENTS IDENTIFIED MARK ⚠ ARE CRITICAL FOR SAFETY, REPLACE ONLY WITH PART NUMBER SPECFIED.
VOLTAGE (MEASURED WITH VOLTMETER) IS DC VOLTAGE. (NO INPUT SIGNAL)
ELECTRLYTIC CAPACITORS (⊣⊢) ARE IN uF/WV.
ALL CAPACITORS ARE IN pF/50WV UNLESS OTHERWISE NOTED.
EX) 030 -> 3pF, 330 -> 33pF, 331 -> 330pF, 333 -> 0.033uF
CIRCUIT IS SUBJECT TO CHANGE FOR IMPROVEMENT.

⚠印は火災、感電の危険に関与する部品の為、必ず指定部品を使用の事。
電圧表示は無信号時に測定した直流電圧を示す。
記入なき電解コンデンサの単位はuF/WVである。
記入なきコンデンサの単位はpF/50WVである。
例) 030 -> 3pF, 330 -> 33pF, 331 -> 330pF, 333 -> 0.033uF
本配線図は基本配線図につき性能改善等により予告なく変更する事がある。

CAUTION
FOR CONTINUED PROTECTION AGAINST FIRE HAZARD,
REPLACE ONLY WITH FUSE OF SAME TYPE AND RATING INDICATED.

CAUTIONF
ATTENTION
AFIN D'ASSURER UNE PROTECTION PERMANENTE CONTRE LES RISQUES D'INCENDIE,
REMPLACER UNIQUEMENT PAR UN FUSIBLE DE MEME TYPE ET CALIBRATION COMME INDIQUE.

THIS SYMBOL LOCATED NEAR THE FUSE INDICATES THAT THE FUSE USED IS SLOW OPERATING TYPE
FOR CONTINUED PROTECTION AGAINST FIRE FUSE HAZARD, REPLACE WITH SAME TYPE FUSE.
RATING REFER TO THE MAKING ADJACENT TO THE SYMBOL.

CE SYMBOLE INDIQUE QUE LE FUSIBLE UTLISE EST A LENT, E POUR UNEPROTECTION PERMANENT,
N'UTILISER QUE DES FUSIBLES DE MEME TYPE.
CE DARNIER EST INDIQUE LA QU LE PRESENT SYMBOL EST APPOSE.

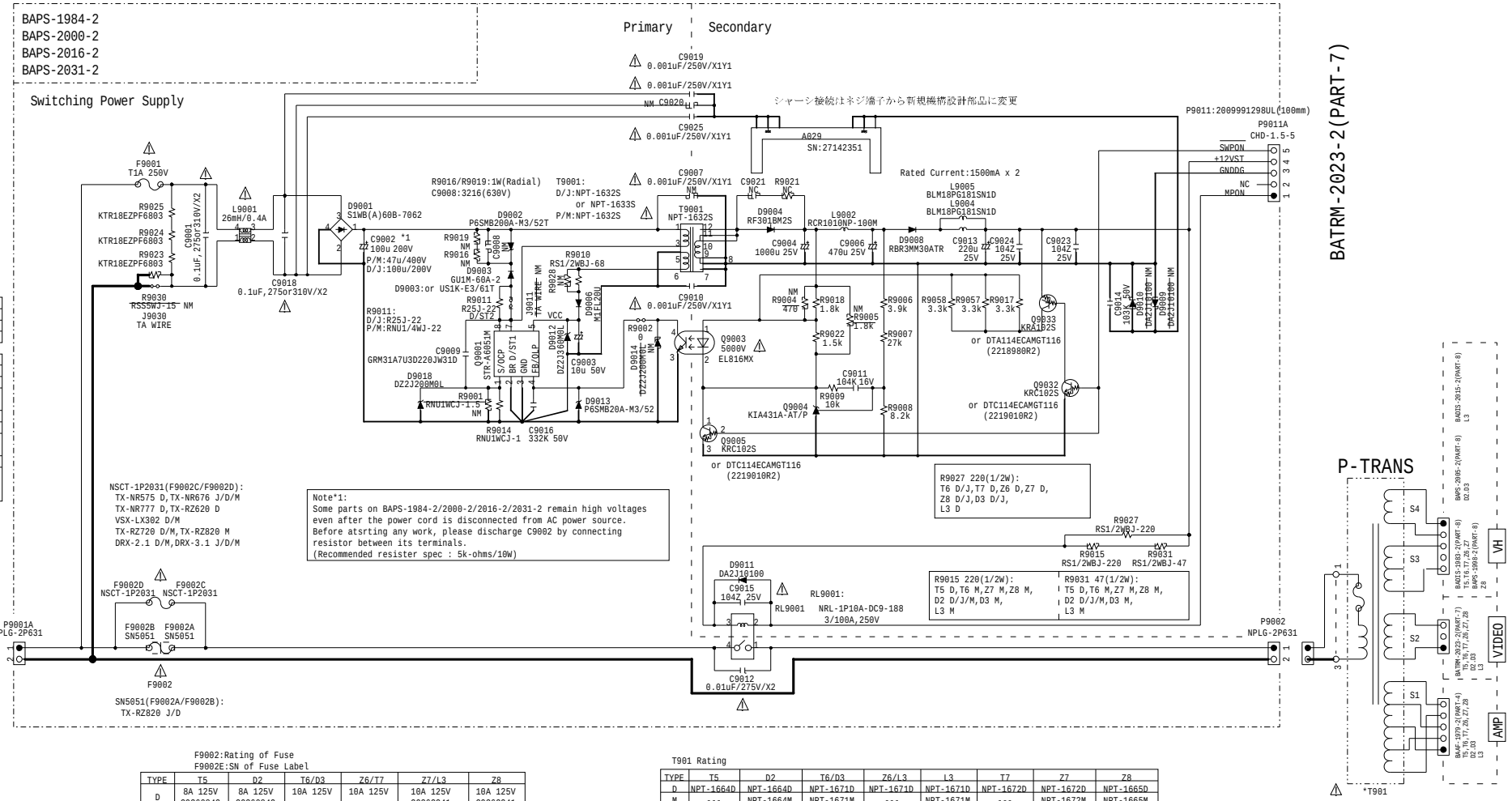

TYPE	AC POWER
D	120Vac,60Hz
M	220-240Vac,50/60Hz
J	100Vac,50/60Hz

MODEL	Destination	AC POWER IN AC CORD	AC POWER IN INLET
T5	MDC	○	
T6	MDF/MJ1	—	○
	Other	○	—
T7	All	○	
Z6	All	○	
Z7	MMA/MMR	—	○
	Other	○	—
Z8	All		○
D2 D3 L3	All		○

F9002:Rating of Fuse
F9002E:SN of Fuse Label

TYPE	T5	D2	T6/D3	Z6/T7	Z7/L3	Z8
D	8A 125V 29360842	8A 125V 29360842	10A 125V ---	10A 125V ---	10A 125V 29362241	10A 125V 29362241
M	---	T2.5AL250V 29361747	T5AL250V 29361938	---	T3.15AL250V 29362779	T4AL250V ---
J	---	---	12A 125V 29392136	---	---	15A 250V 29362252

T901 Rating

TYPE	T5	D2	T6/D3	Z6/L3	L3	T7	Z7	Z8
D	NPT-1664D	NPT-1664D	NPT-1671D	NPT-1671D	NPT-1671D	NPT-1672D	NPT-1672D	NPT-1665D
M	---	NPT-1664M	NPT-1671M	---	NPT-1671M	---	NPT-1672M	NPT-1665M
J	---	---	NPT-1671J	---	---	---	---	NPT-1665J

PART-7 VIDEO,SPOUT,IR/12VTRG SECTION

Schematic Diagram

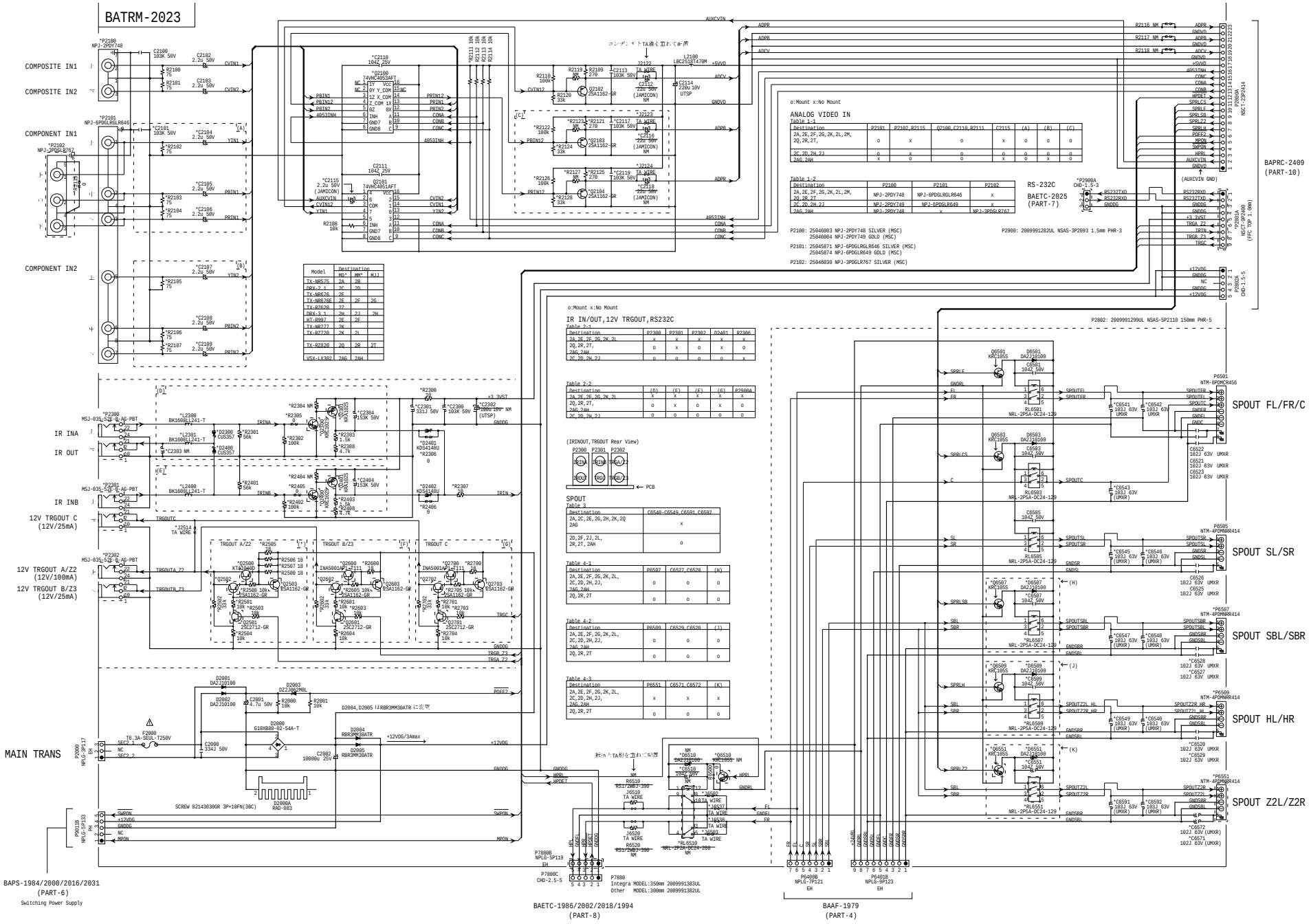

TX-RZ820

PART-7 RS232C SECTION

BAETC-2025

Model	Destination
TX-NR578	2A 2B
DRX-2.1	2C 2D
HT-R997	2E 2F
TX-NR676	2E
TX-NR676E	2E 2F 2G
TX-RZ620	2Z
DRX-3.1	2H 2J 2H
HT-R997	2E 2F
TX-NR777	2K
TX-RZ720	2K 2L
	2N 2P
TX-RZ820	2Q 2R 2T
	2W 2X
VSX-LX302	2AG 2AH

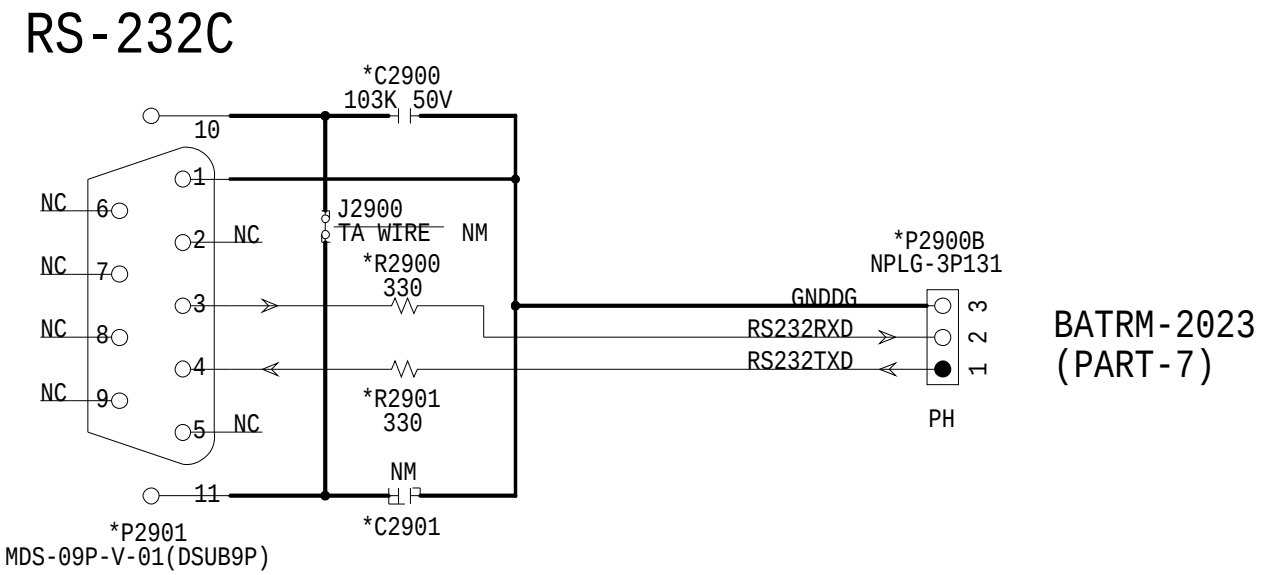

BATRM-2023
(PART-7)

Destination	P2900B,P2901,C2900,R2900,R2901
2A,2E,2F,2G,	All No Mount
2C,2D,2H,2H,2K,2L,2N,2P, 2Q,2R,2T,2W,2X,2Z 2AG,2AH	All Mount

PART-8 DISPLAY SECTION -1

Schematic Diagram

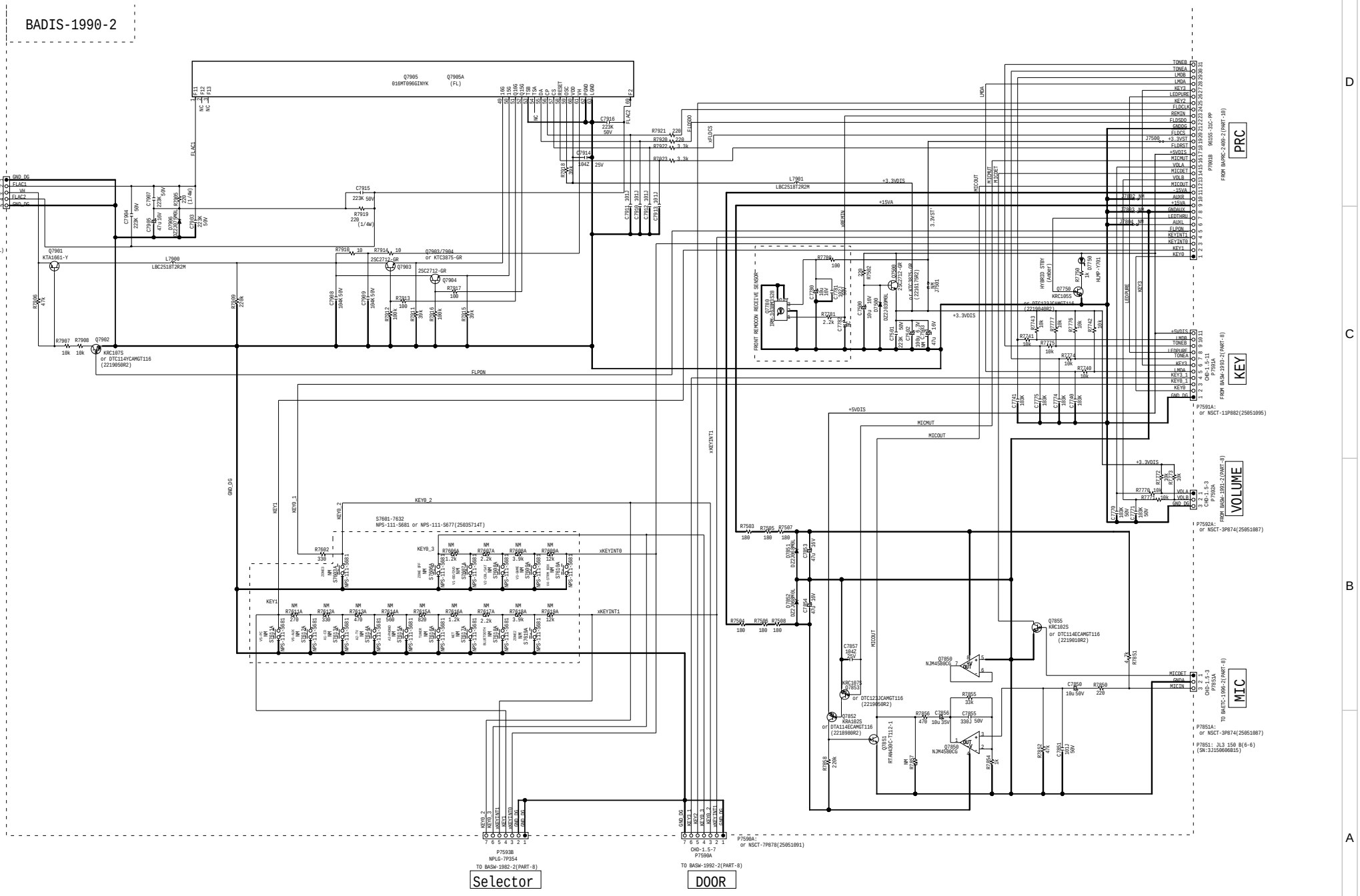

PART-8 DISPLAY(VOLUME)SECTION

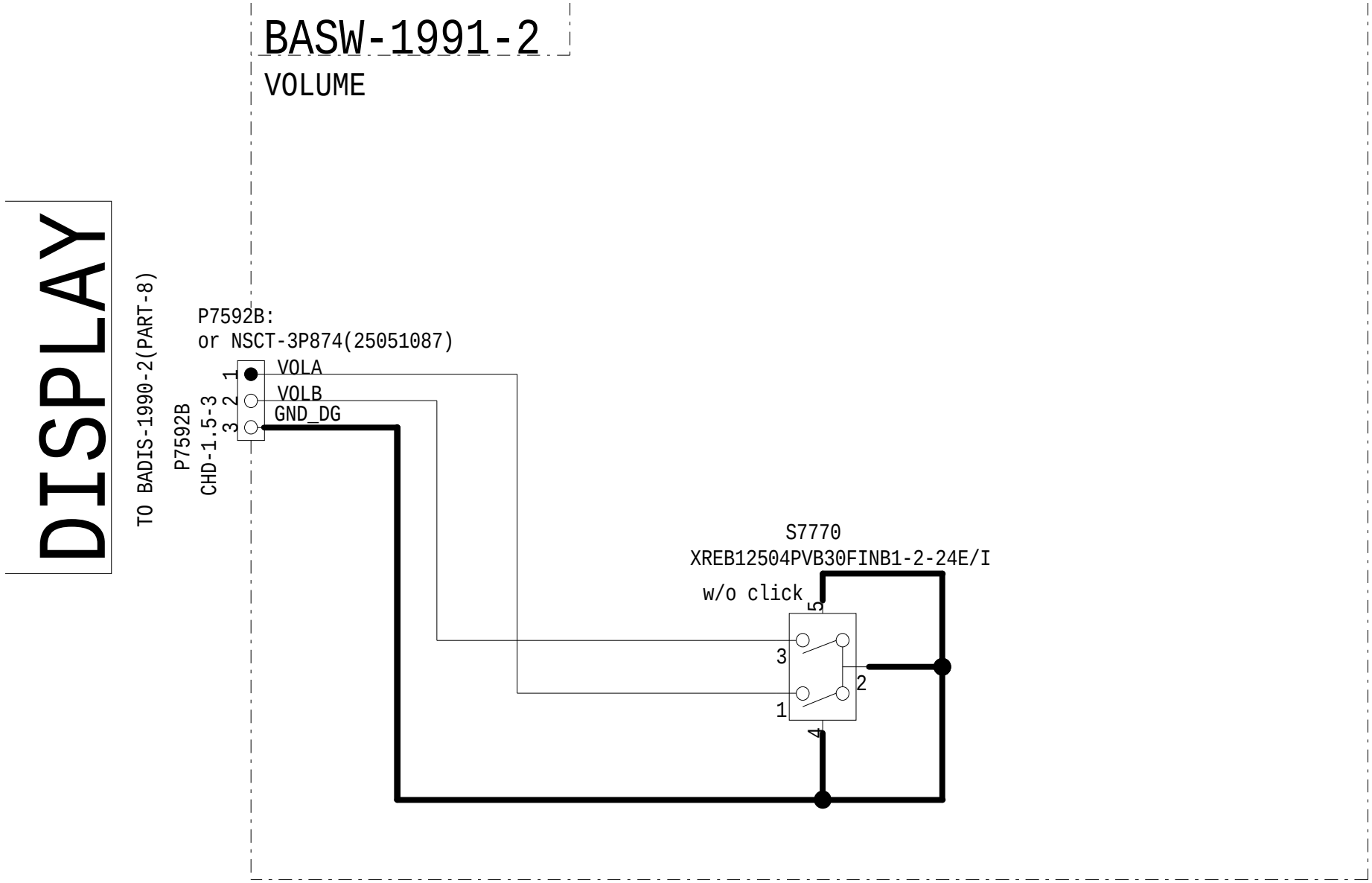

PART-8 DISPLAY(DOOR)SECTION

Schematic Diagram

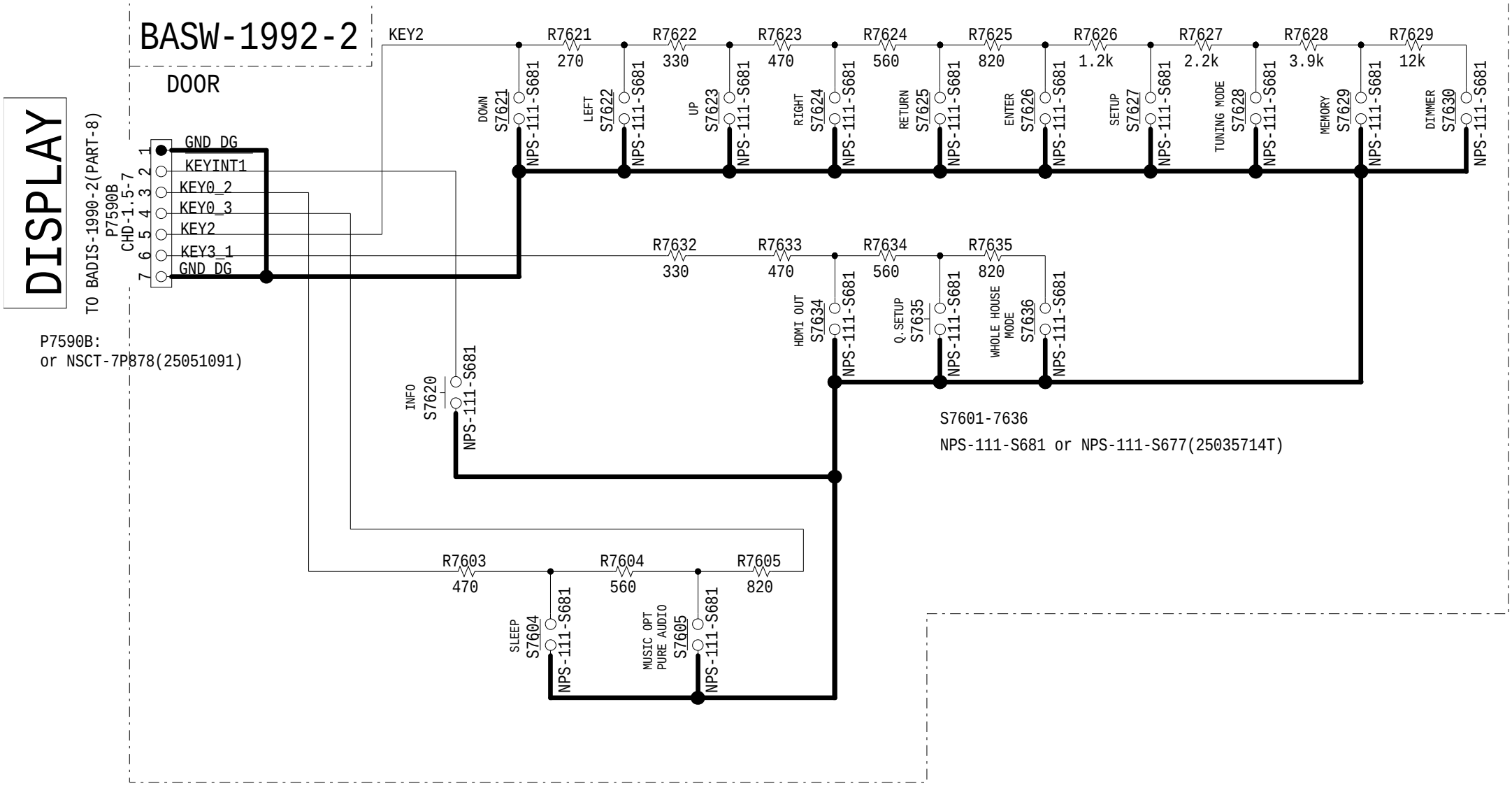

PART-8 DISPLAY(KEY)SECTION

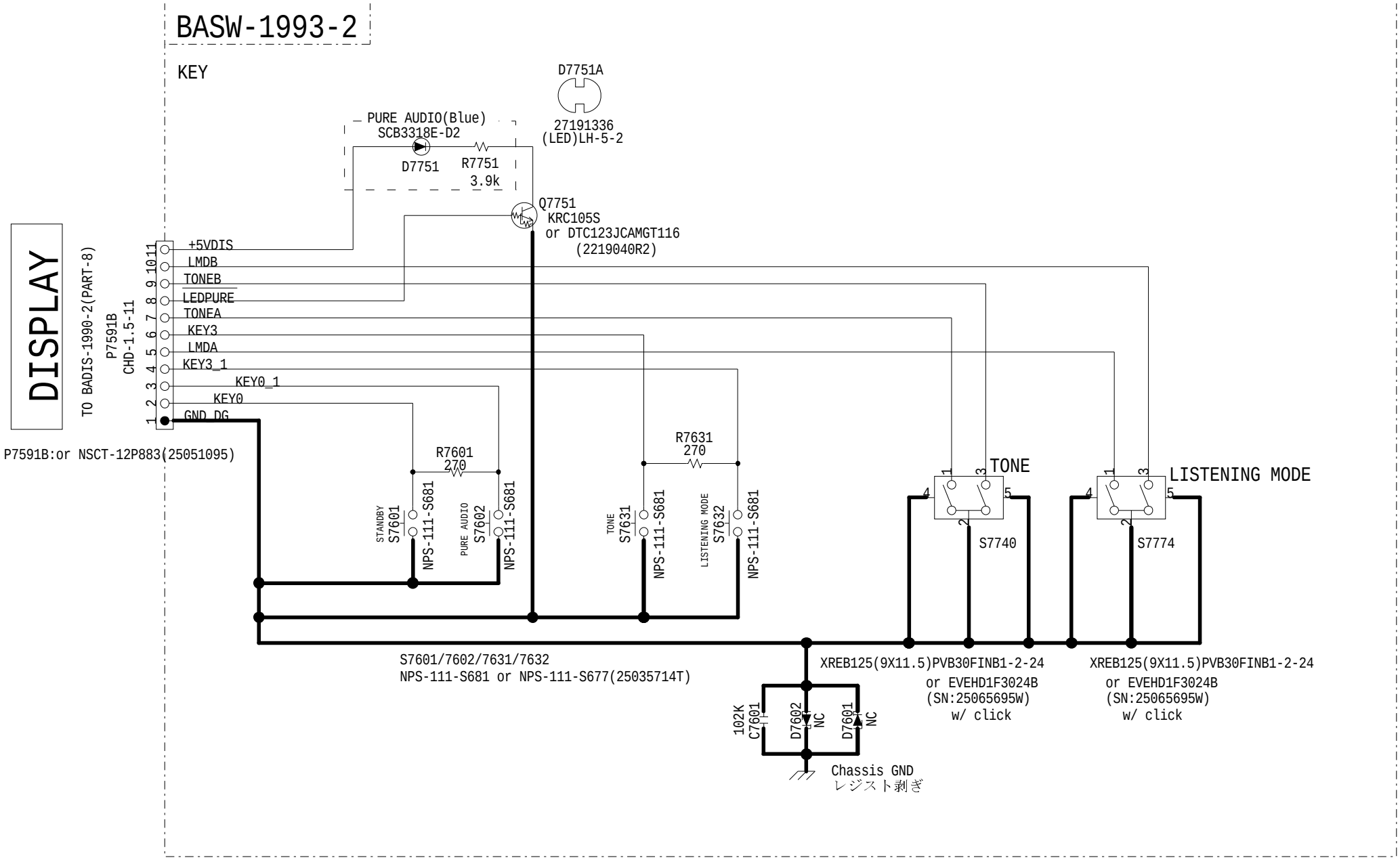

PART-8 DISPLAY(HEADPHONE)SECTION

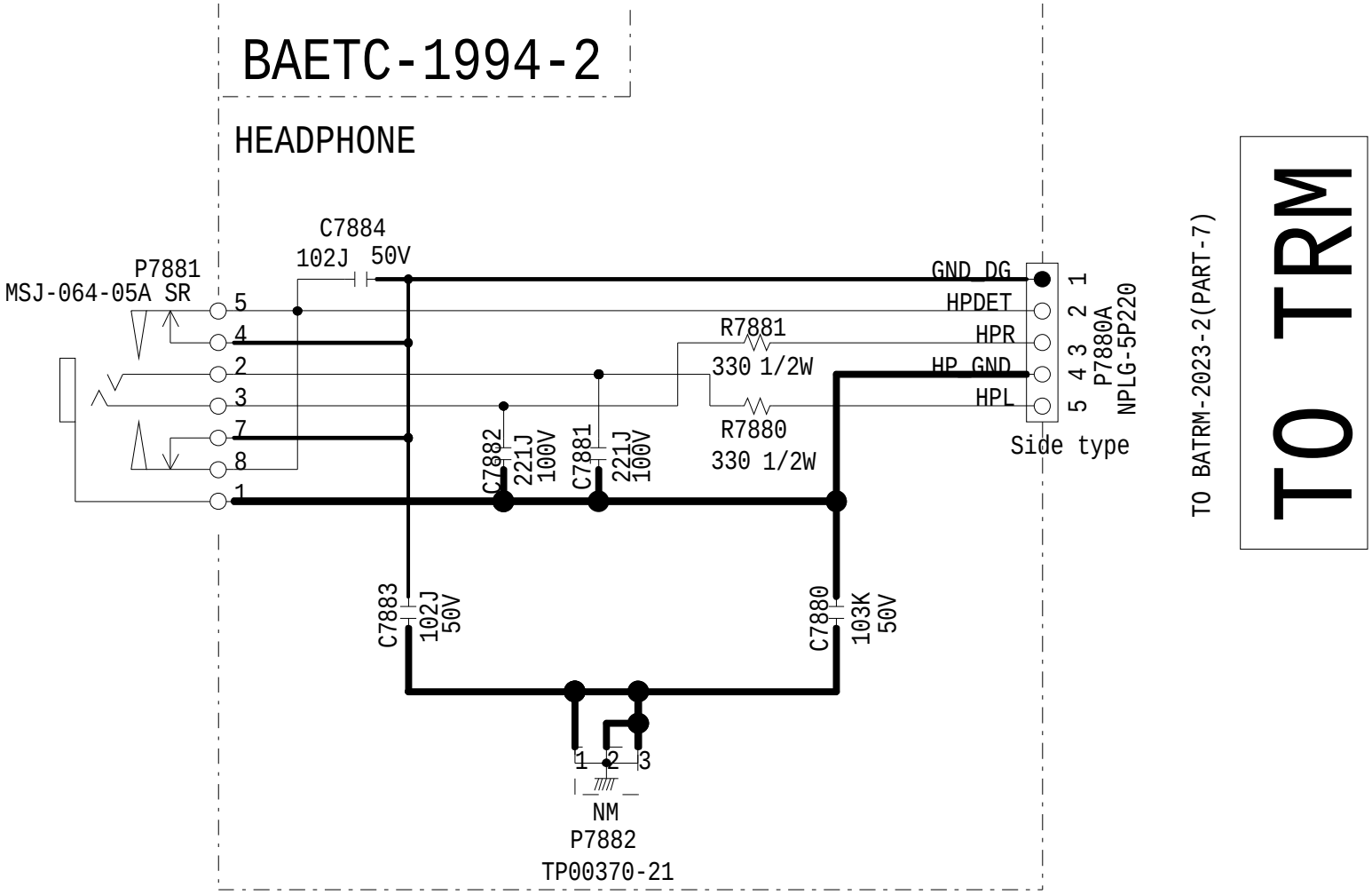

PART-8 DISPLAY(MIC)SECTION

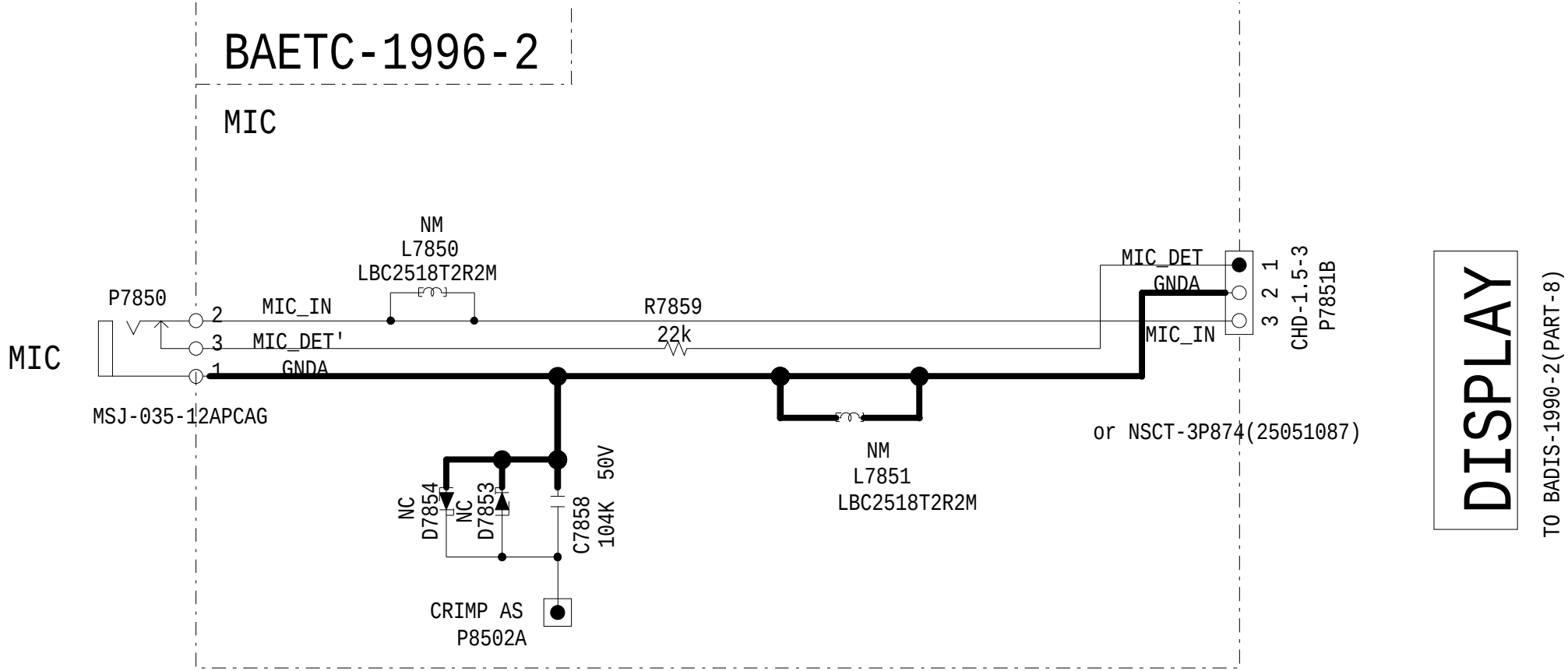

PART-8 DISPLAY(Power supply) SECTION

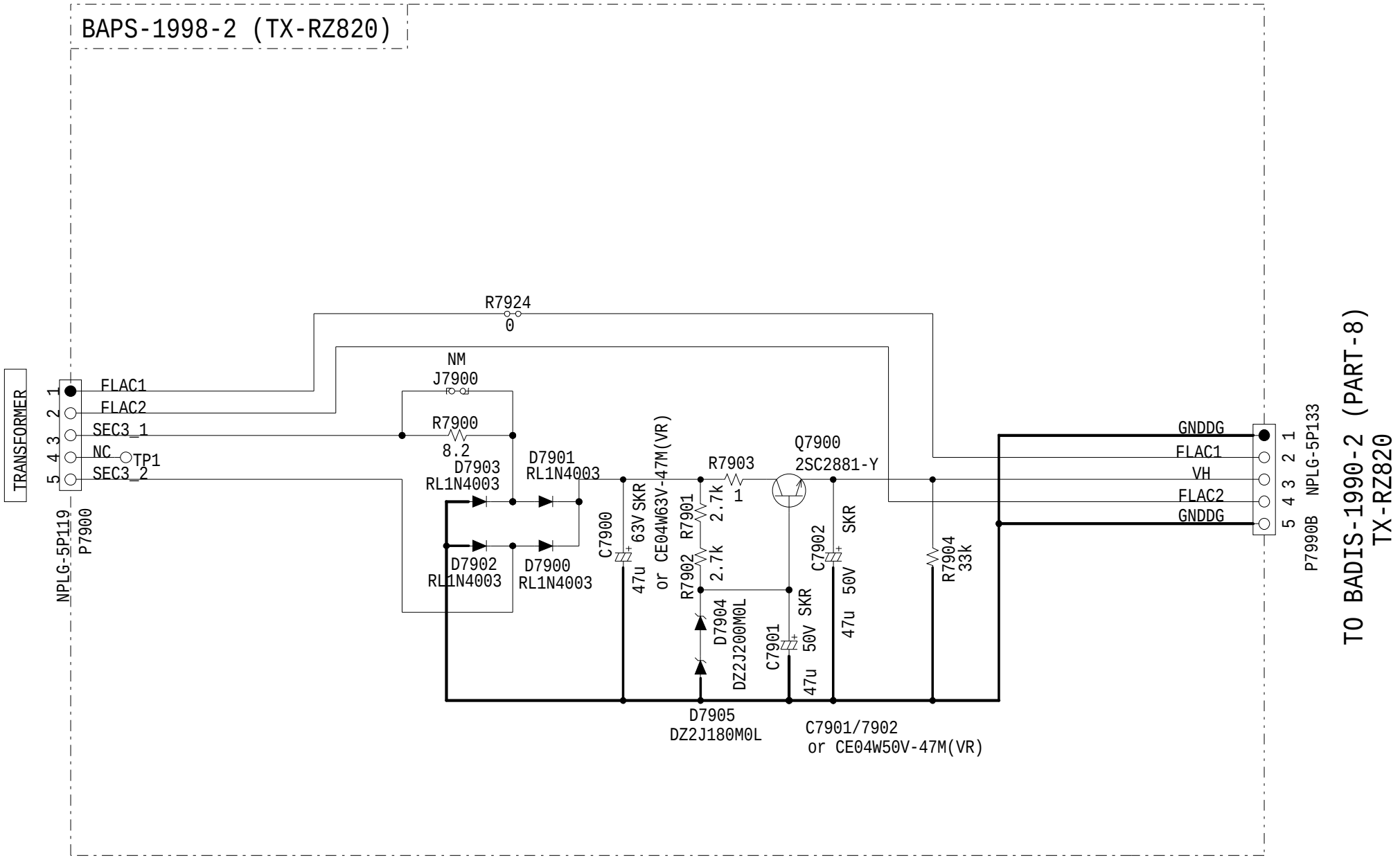

PART-8 DISPLAY SECTION -2

BASW-1982-2

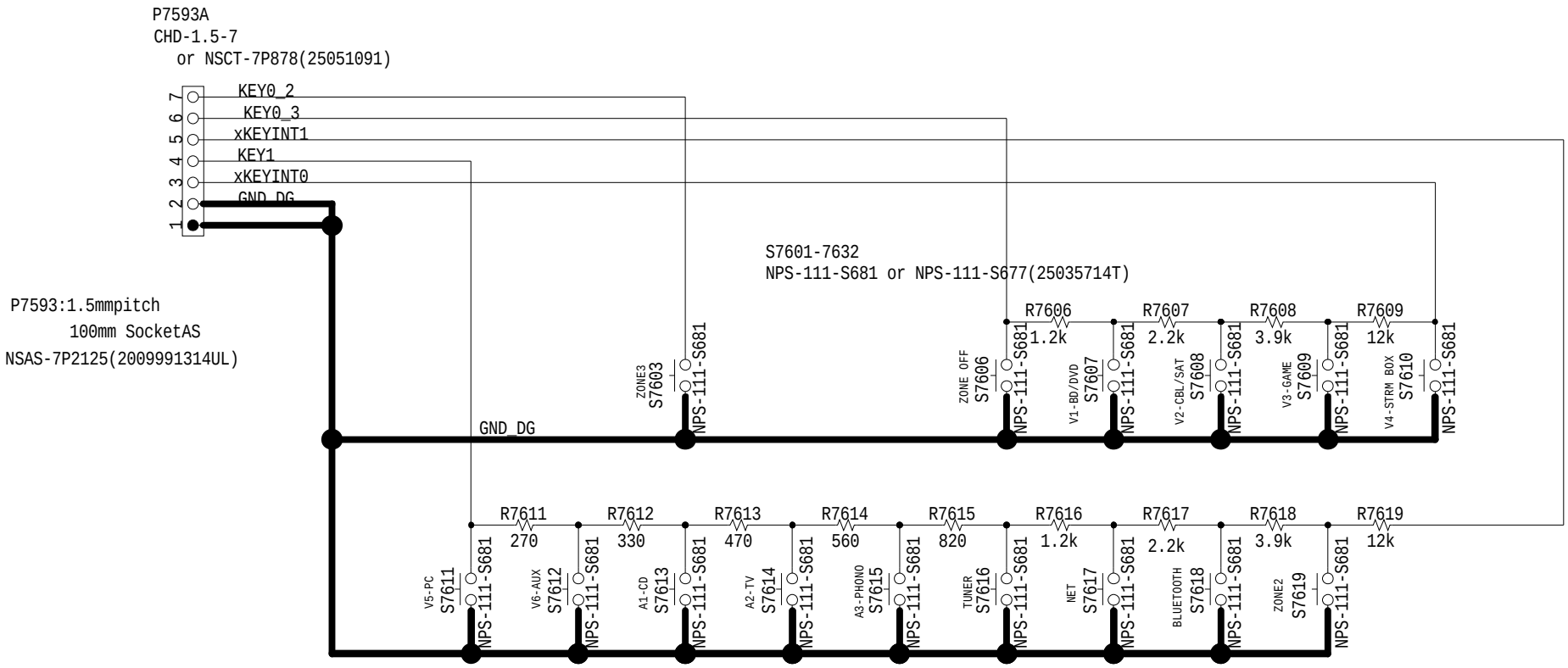

PART-9 DAC FILTER (VLSC) SECTION

Schematic Diagram

部品種類表記無きアルミ電解Cは全てＵＴＳＰ品
部品定格または定格電力表記無き抵抗は全て１／１０Ｗチップ品

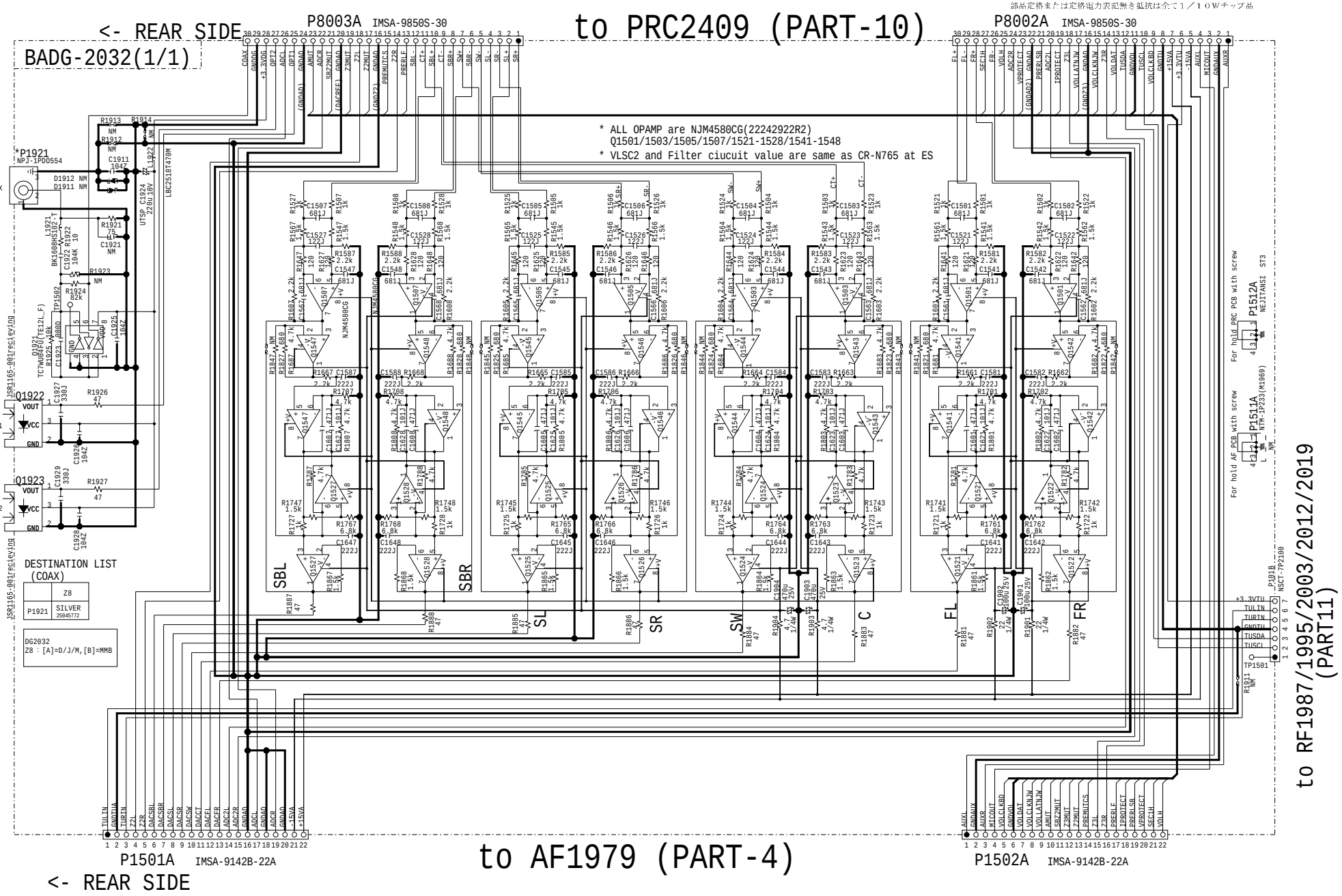

PART-10 MPU SECTION

BAPRC-2409 (1/11)

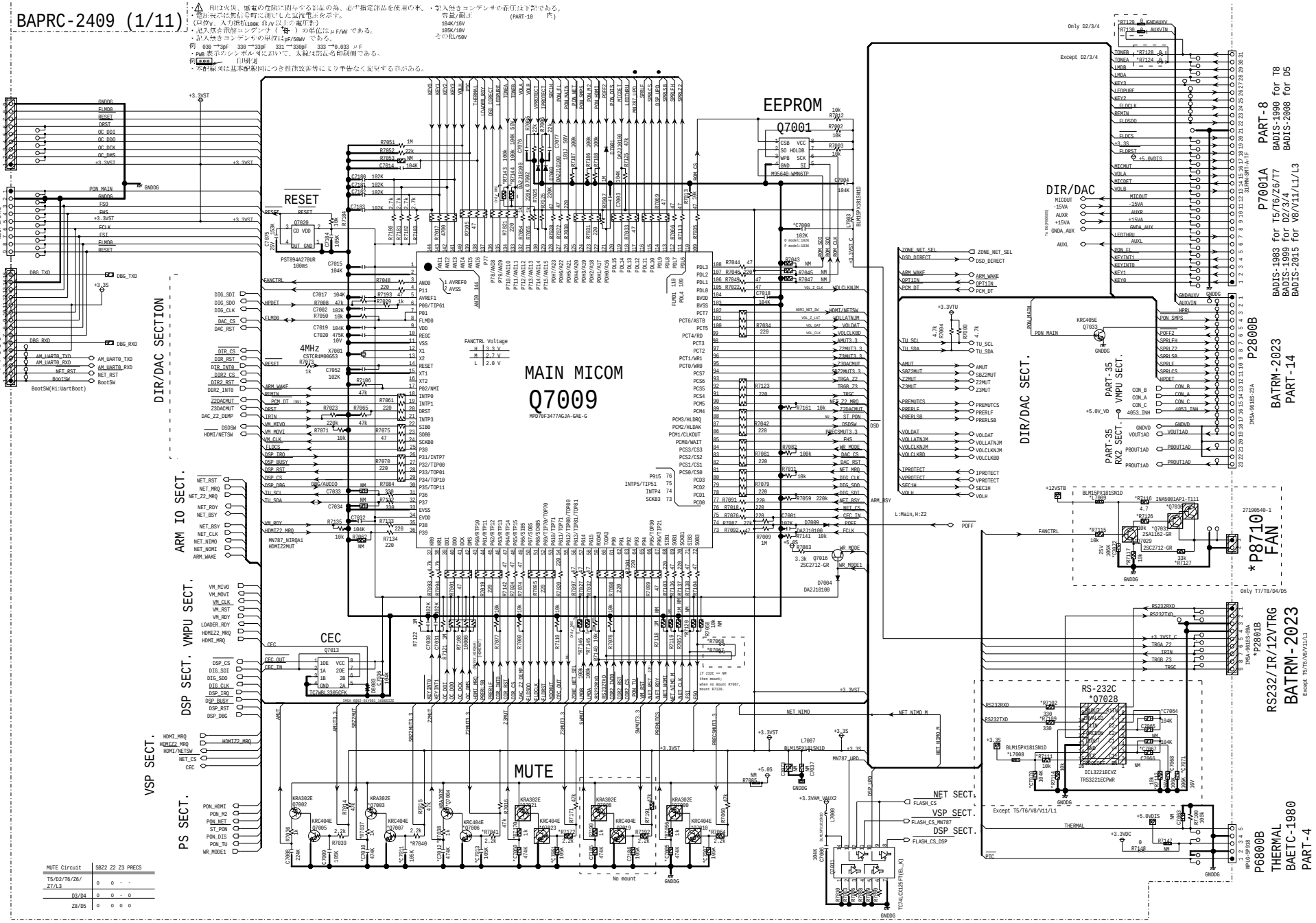

MUTE Circuit	SB22	Z2	Z3	PRECS
T5/D2/T6/Z6/Z7/L3	o	o	-	-
D3/D4	o	o	-	o
Z8/D5	o	o	o	o

PART-10 VMPU SECTION

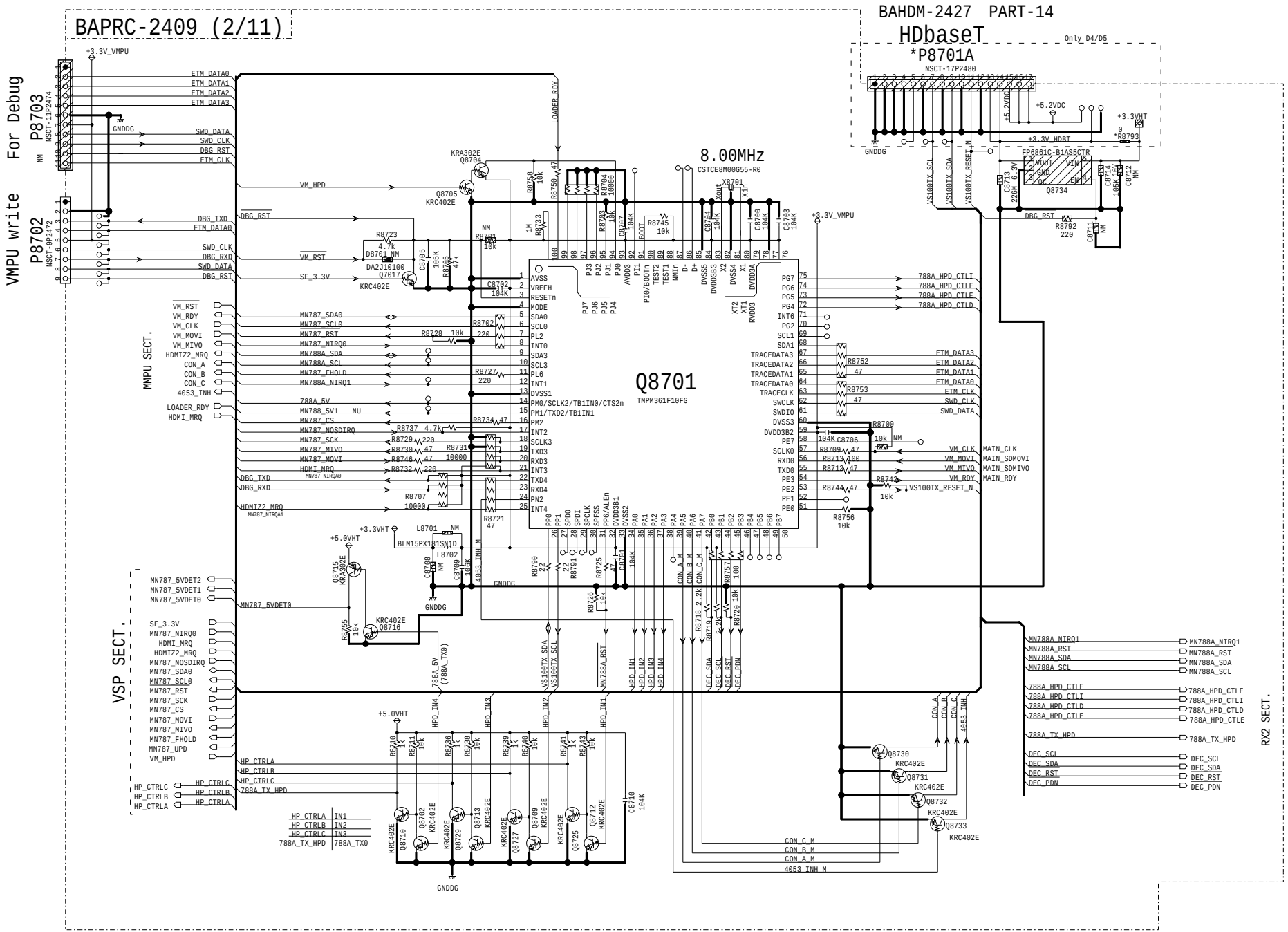

PART-10 VSP SECTION

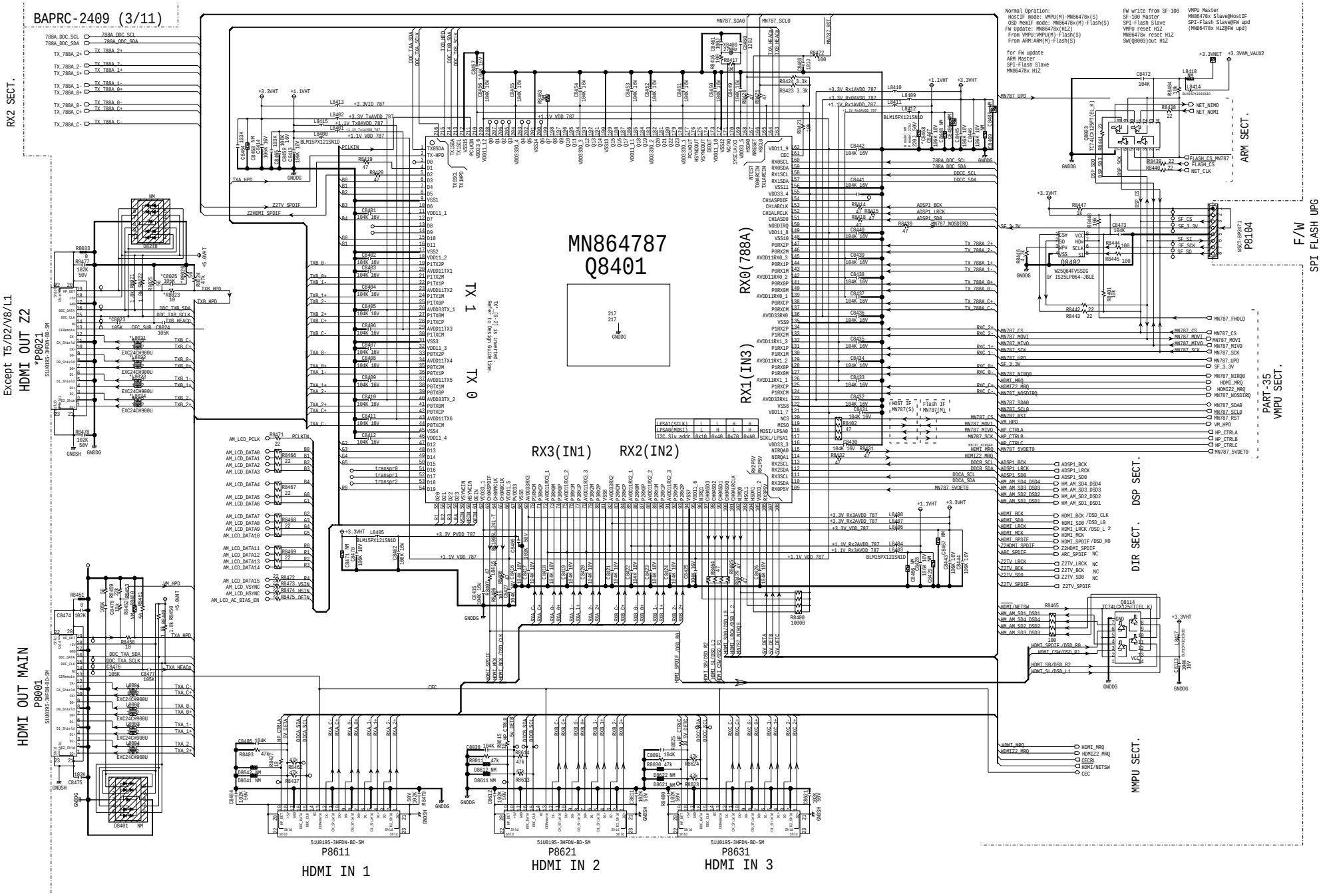

PART-10 HDMI RX2 SECTION

BAPRC-2409 (4/11)

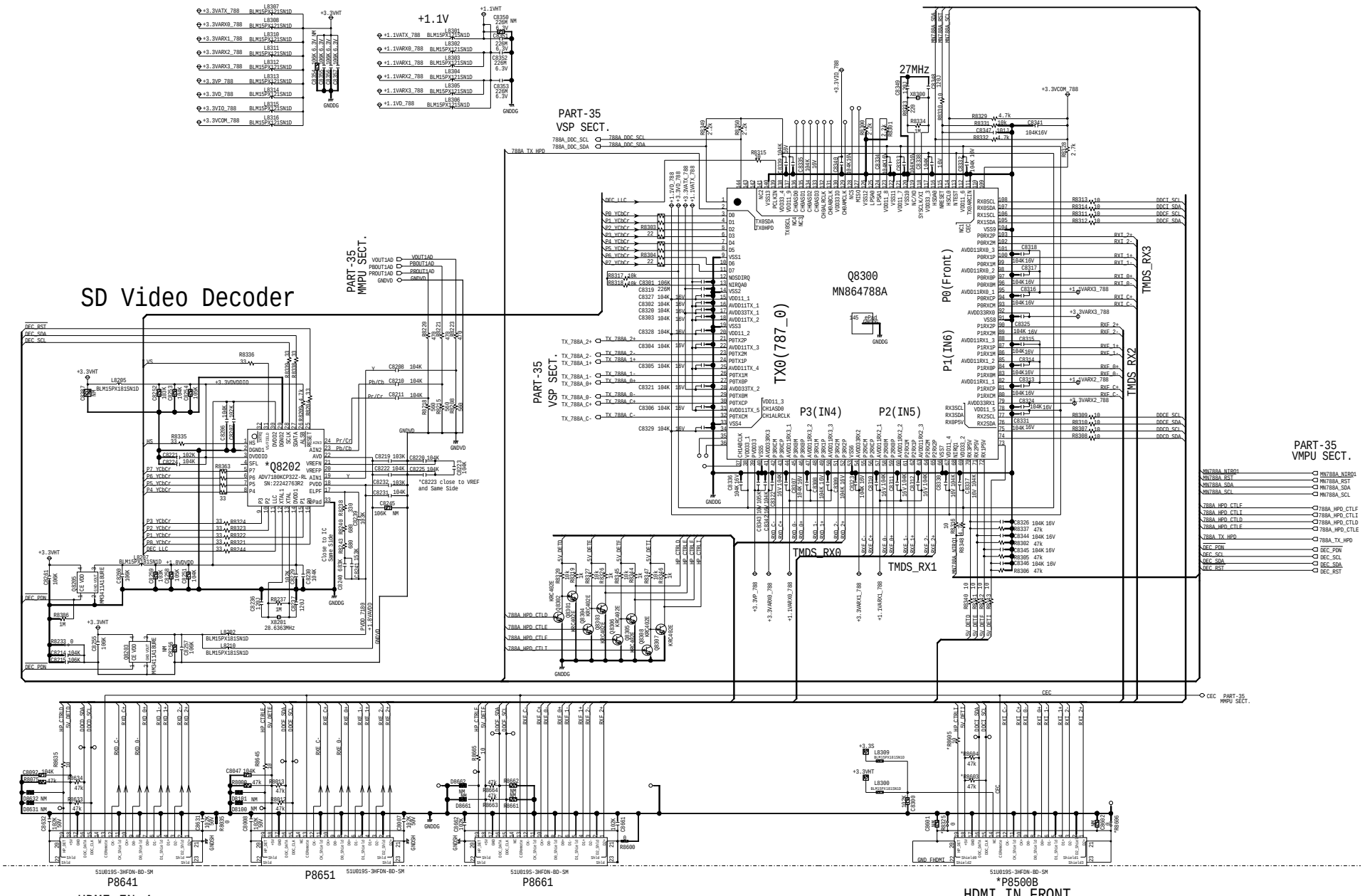

PART-10 DIRDAC SECTION

BAPRC-2409 (5/11)

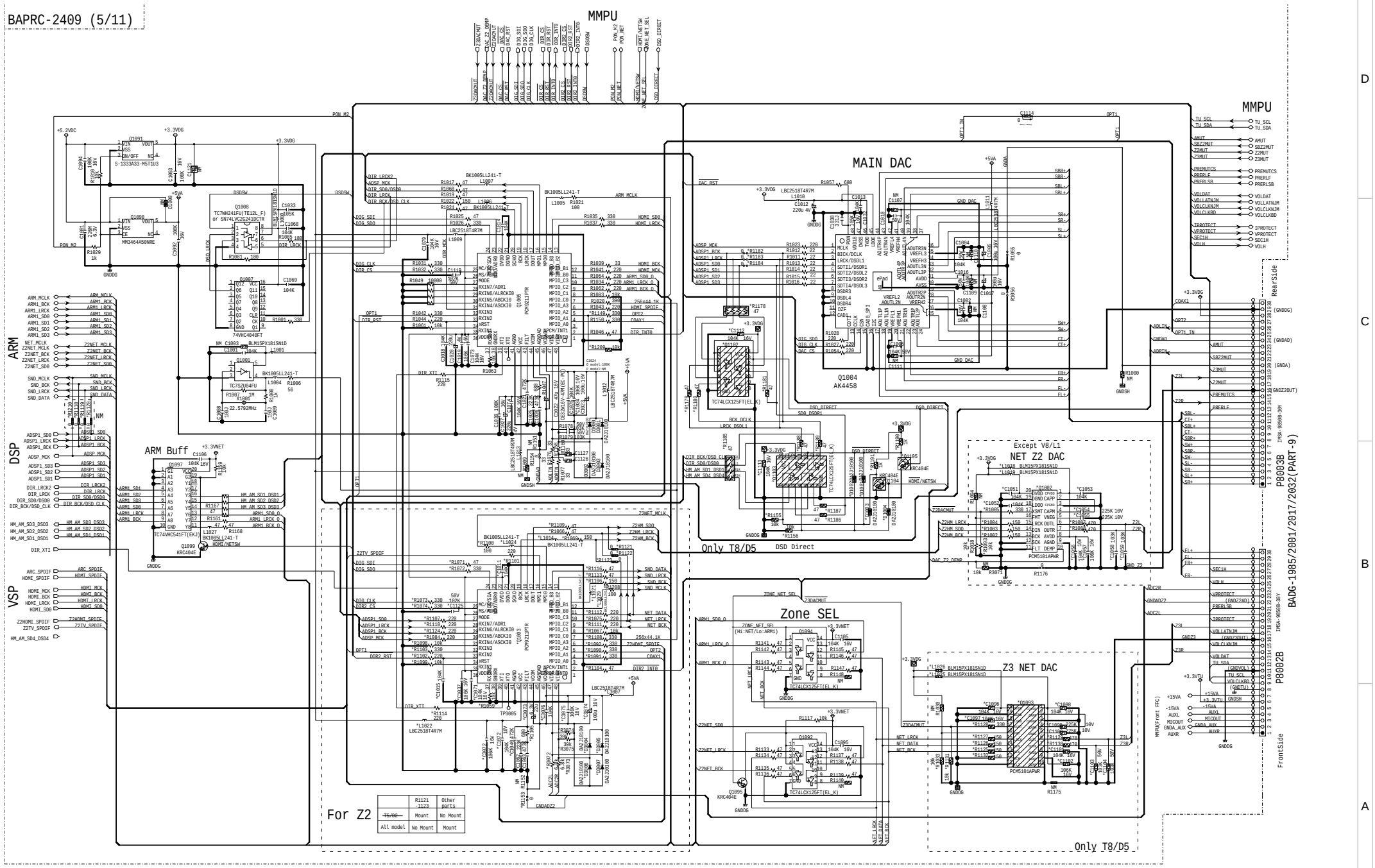

	R1121 -1123	Other parts
~~T5/D2~~	Mount	No Mount
All model	No Mount	Mount

PART-10 DSP SECTION

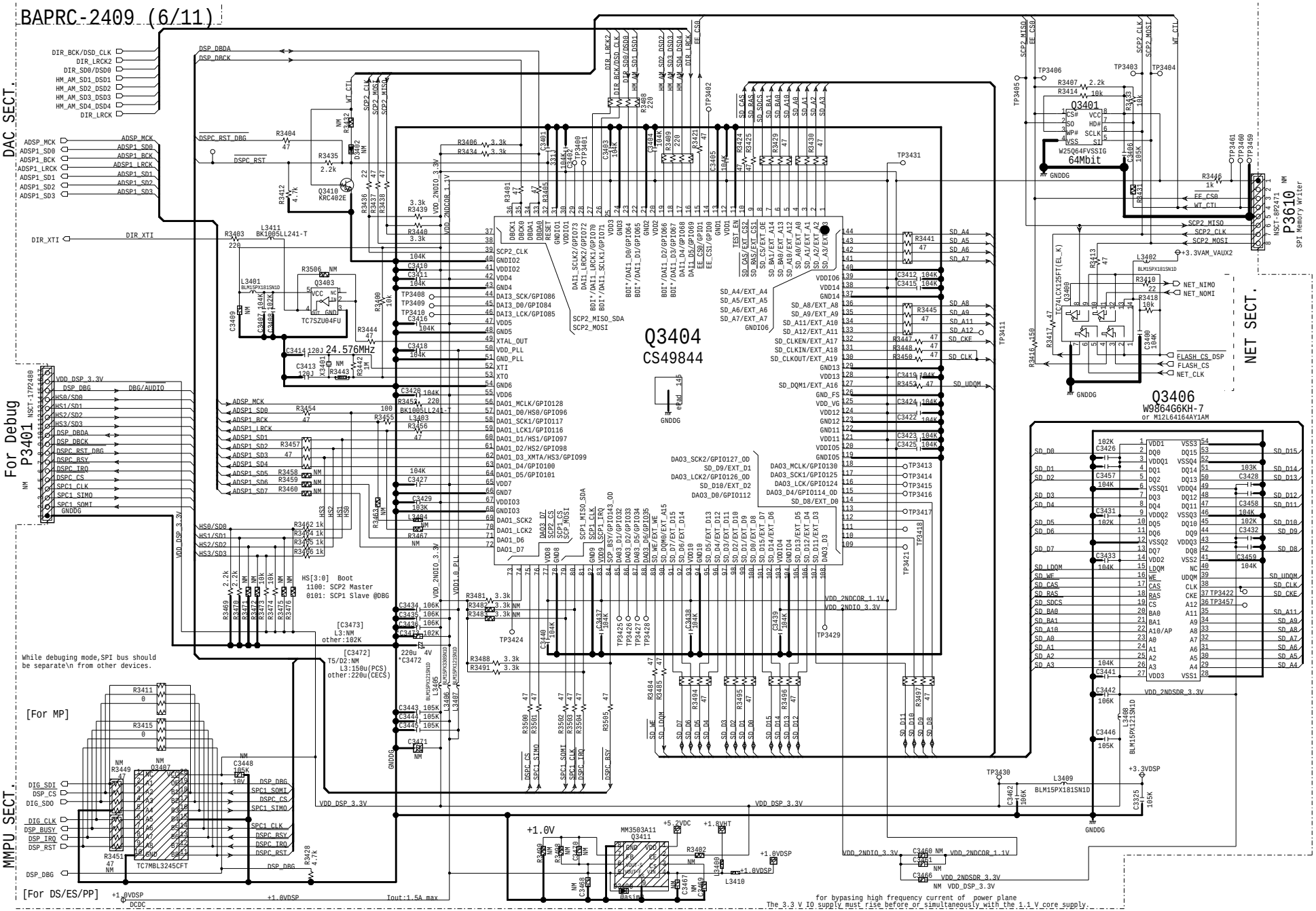

PART-10 ARM IO SECTION

BAPRC-2409 (7/11)

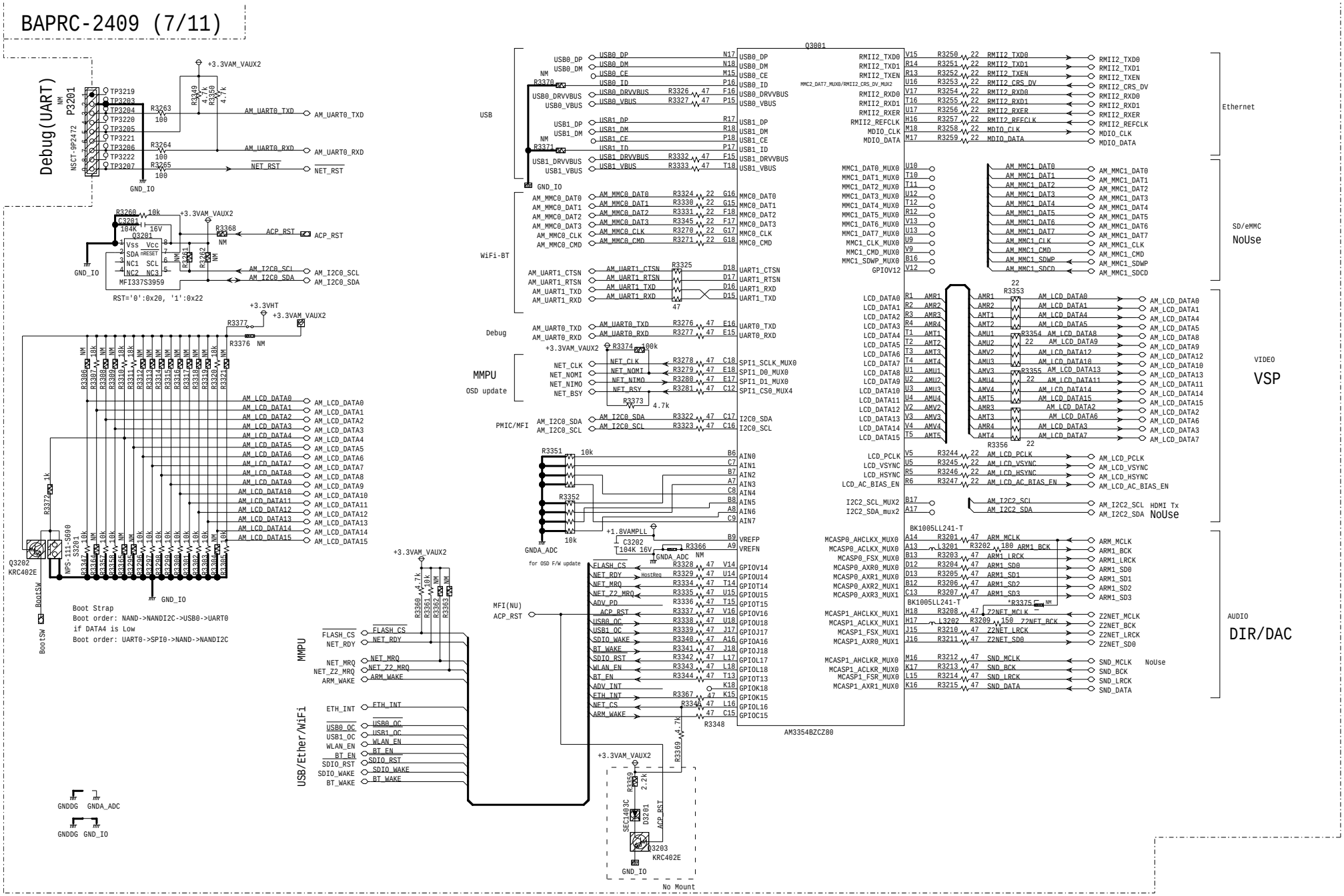

PART-10 ARM PS SECTION

BAPRC-2409 (8/11)

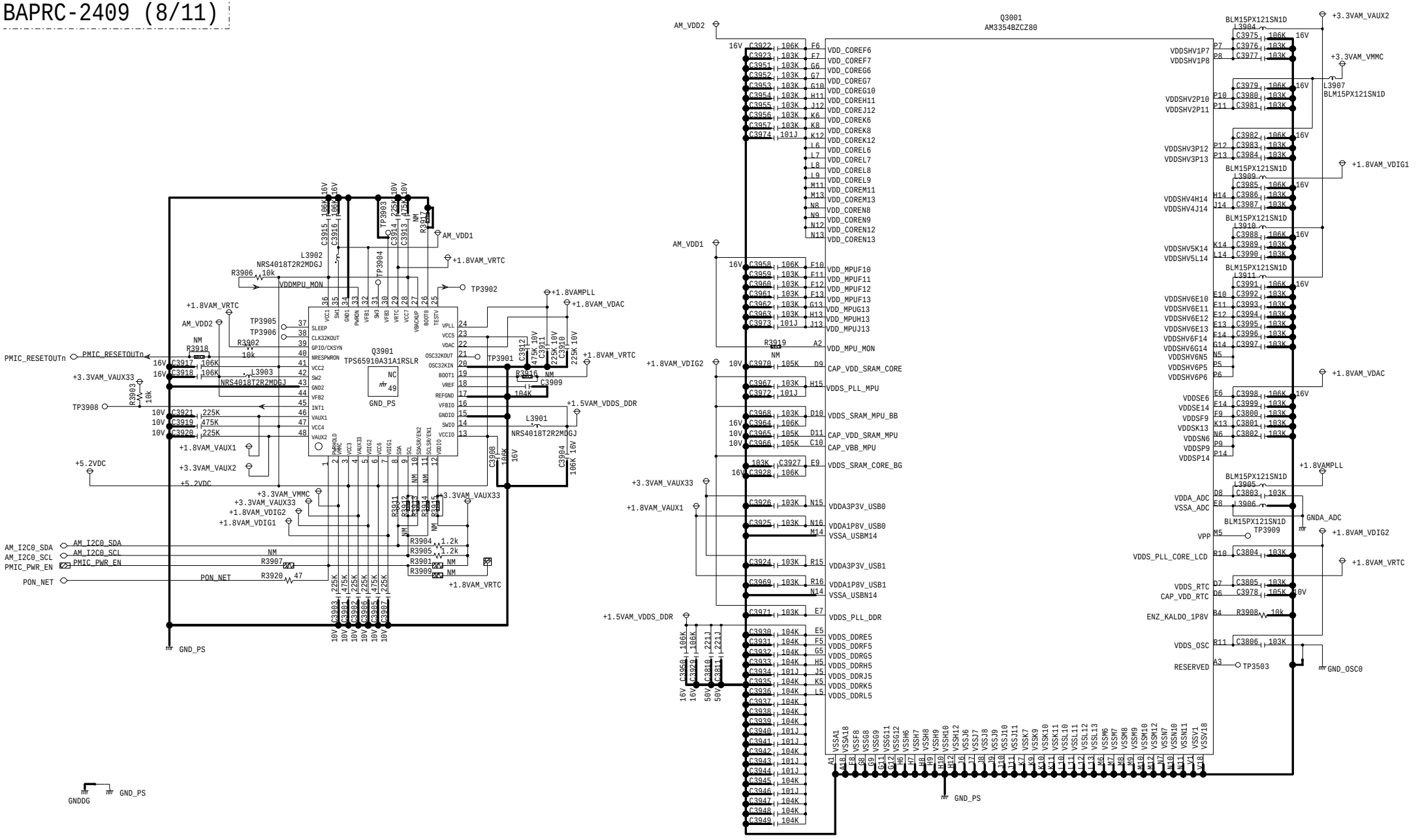

Schematic Diagram

PART-10 ARM Memory SECTION

BAPRC-2409 (9/11)

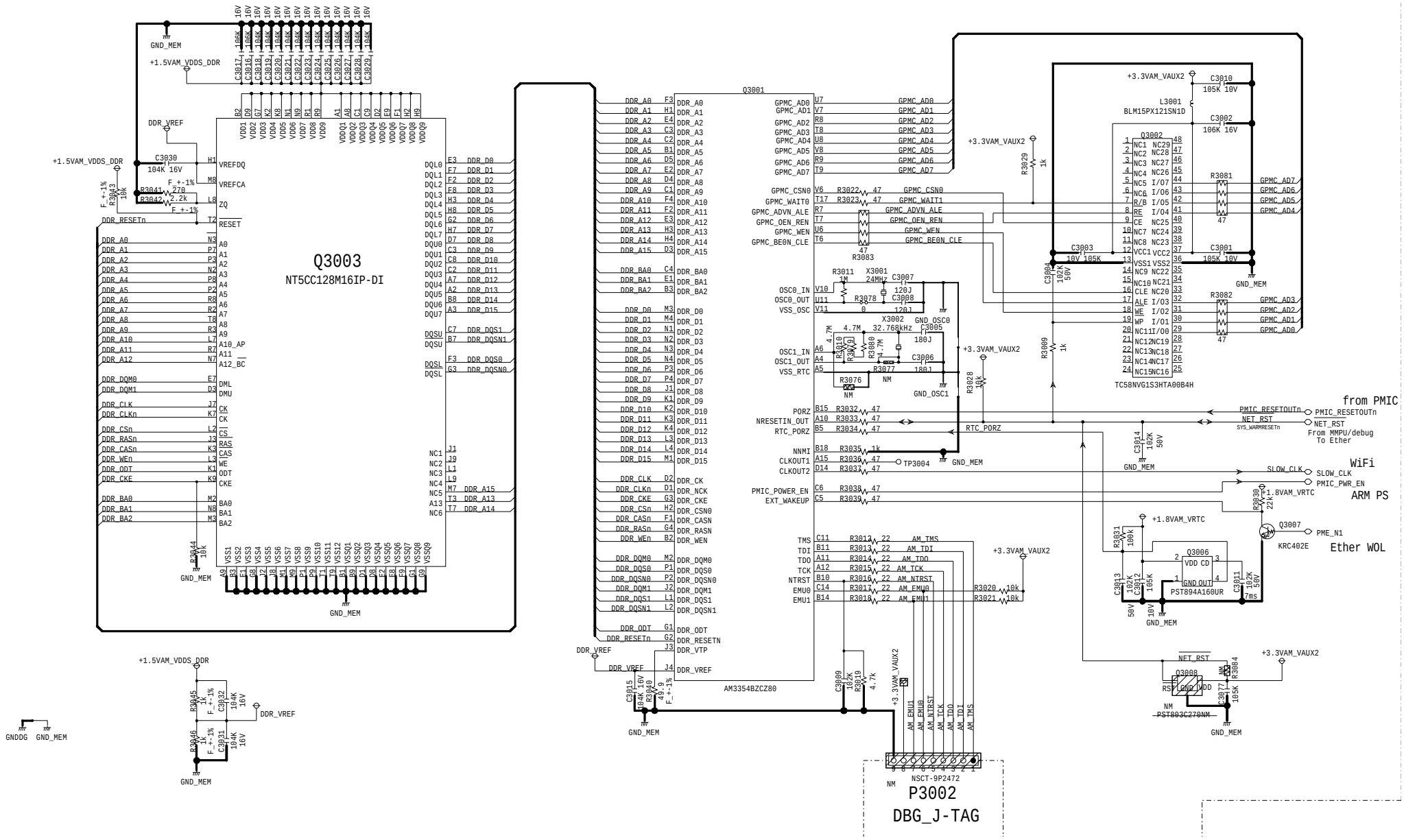

TX-RZ820

PART-10 ARM USBEthernetWiFi SECTION

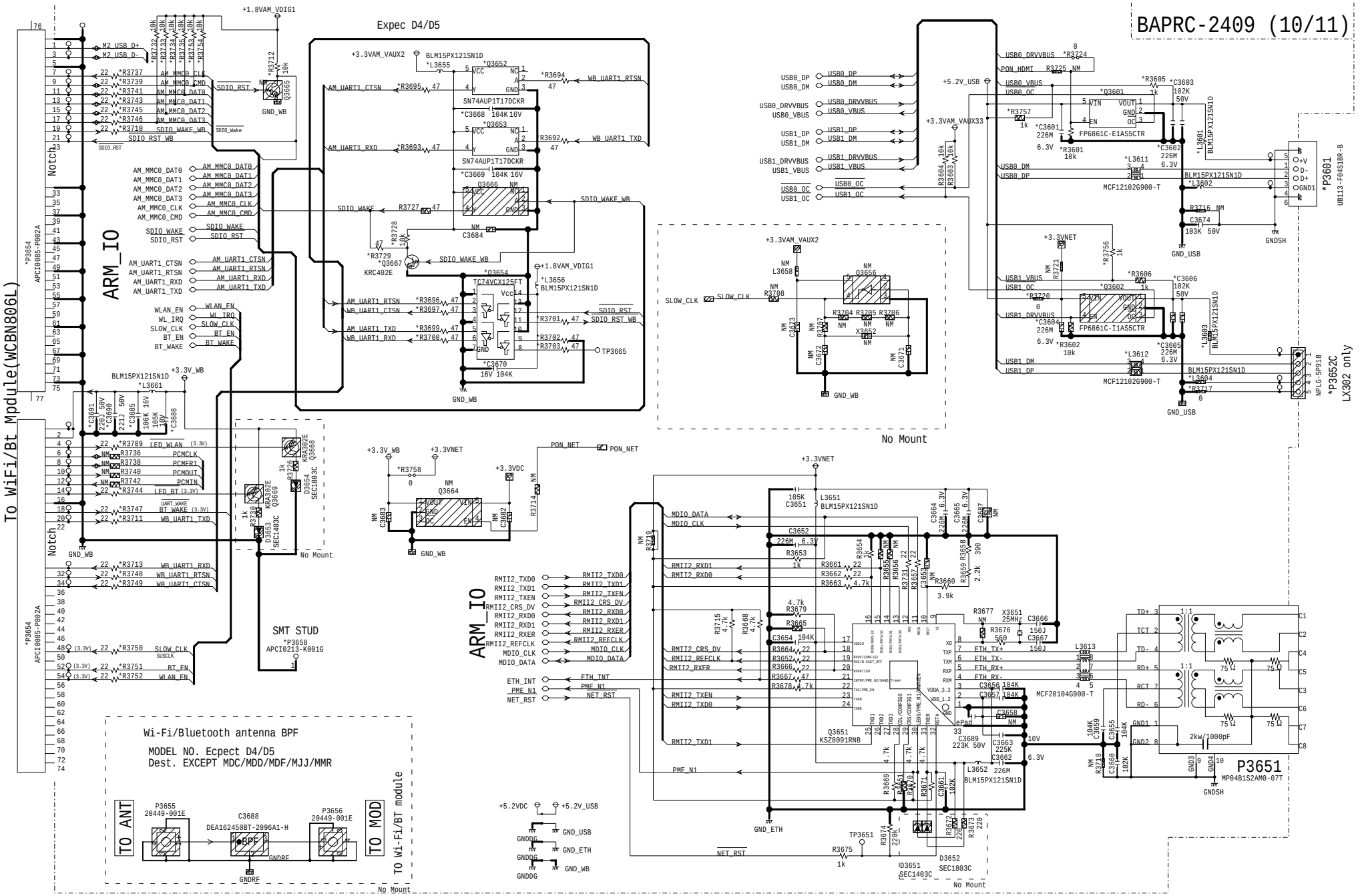

PART-10 POWER SECTION

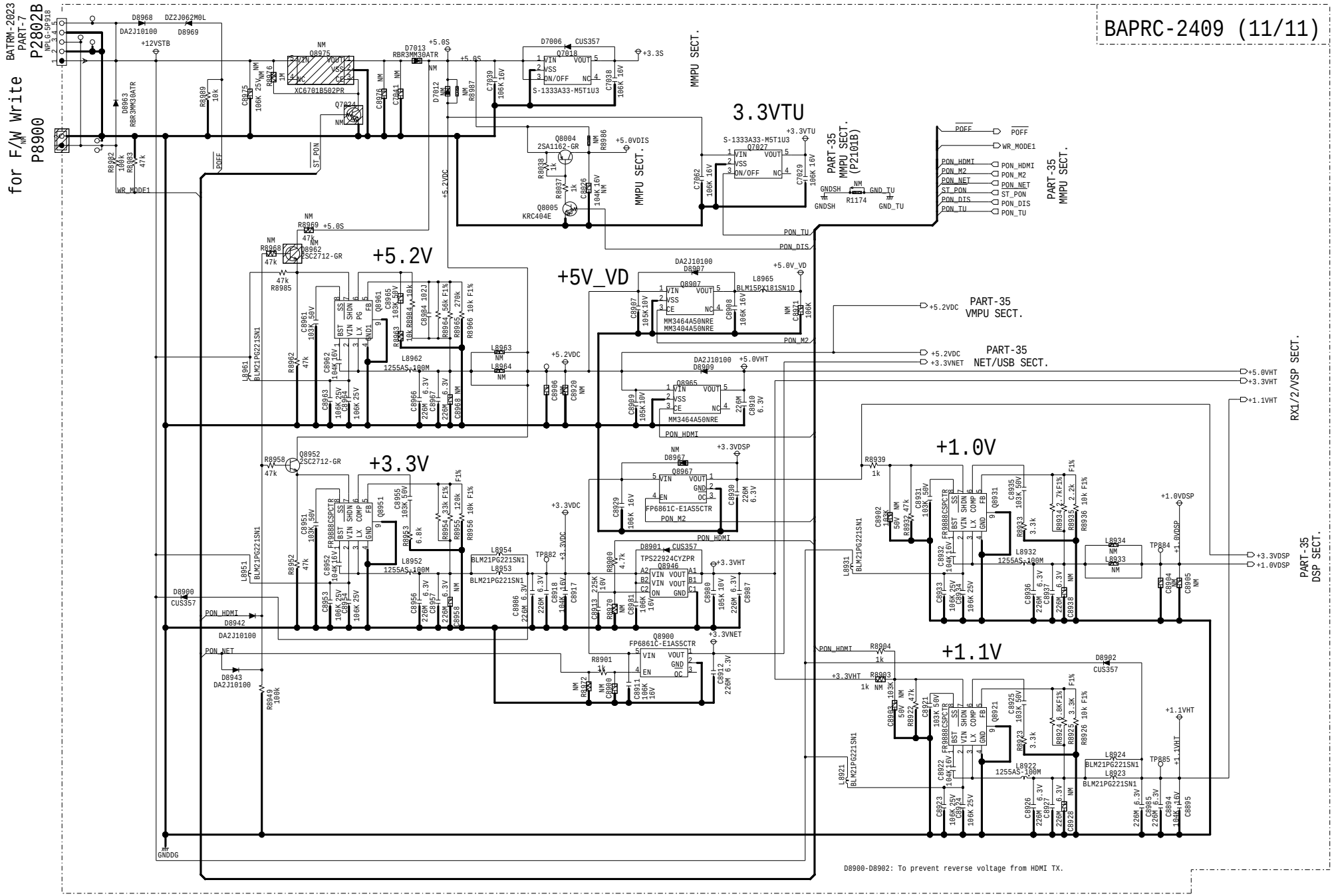

PART-11 TUNER SECTION

Schematic Diagram

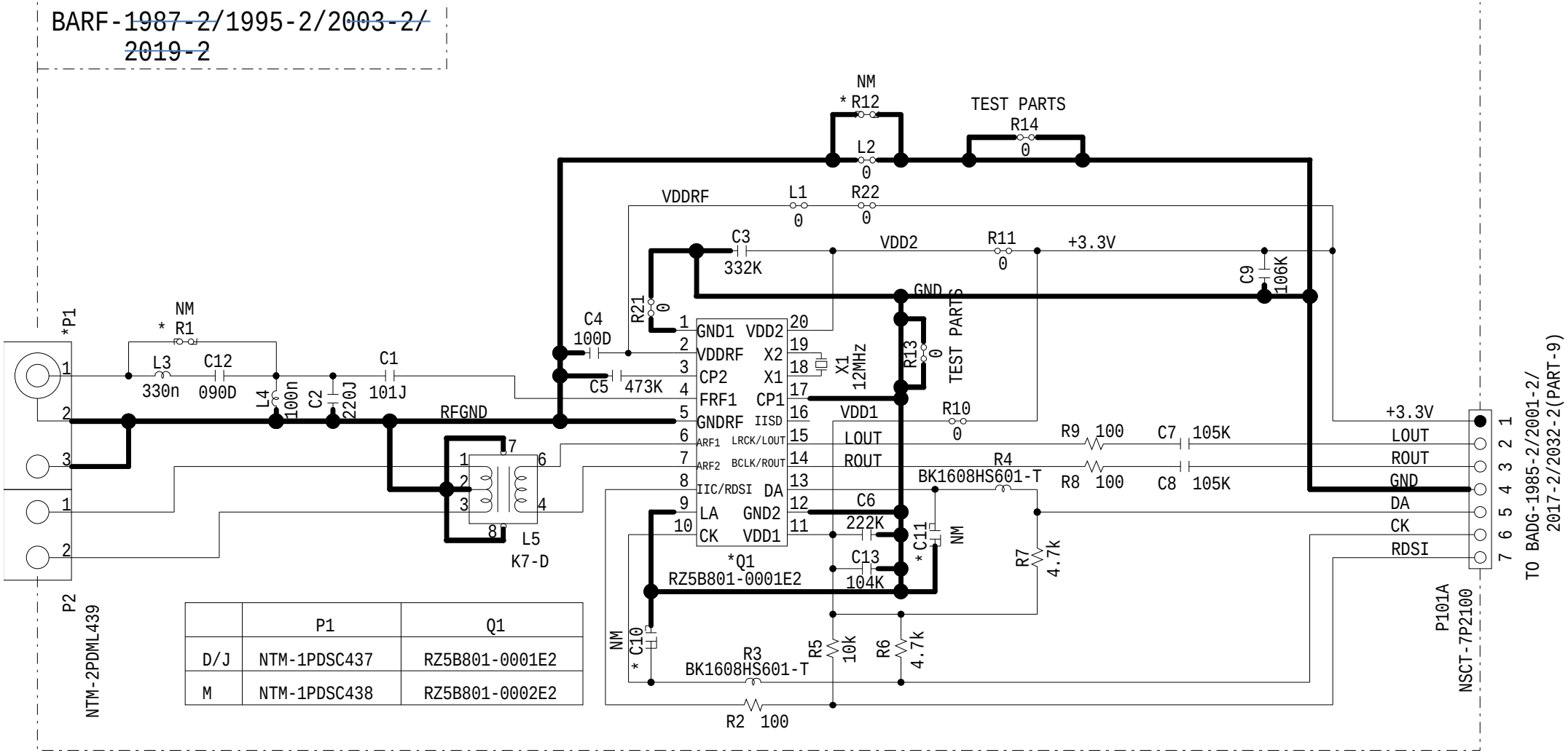

	P1	Q1
D/J	NTM-1PDSC437	RZ5B801-0001E2
M	NTM-1PDSC438	RZ5B801-0002E2

PART-12 FRONT HDMI SECTION

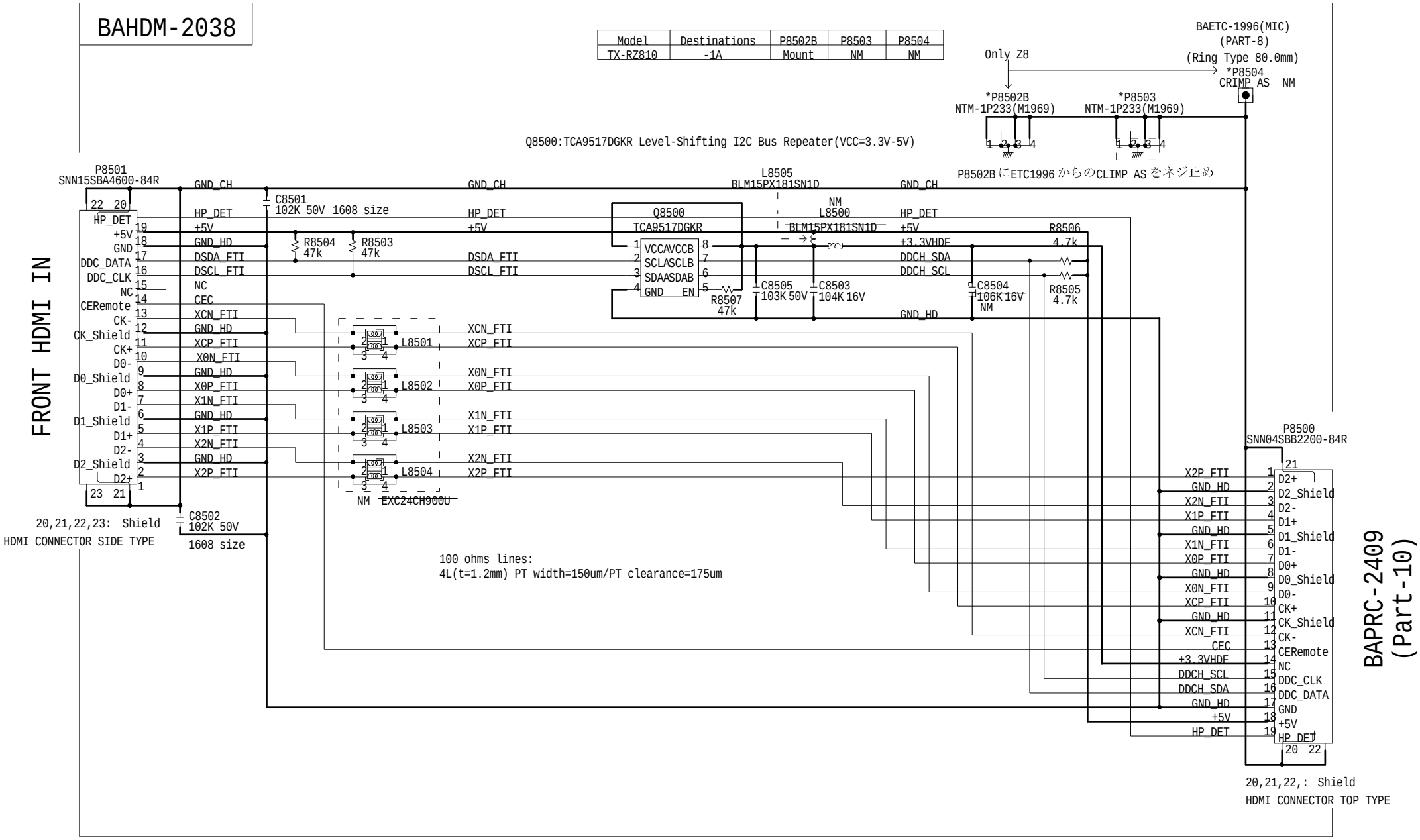

Exploded View

A501 = A501A + A501B

BATTERY
A805, A806, A807, A910, A921
A808(MMR)
A810(MDC/MMR)
A901, A905, A920(MDC/MMP/MMB)
A902(MDC/MMP)
A903(MMP)
A904(MMB/MMR)
A906, A911(MMR)
A922(MDC)

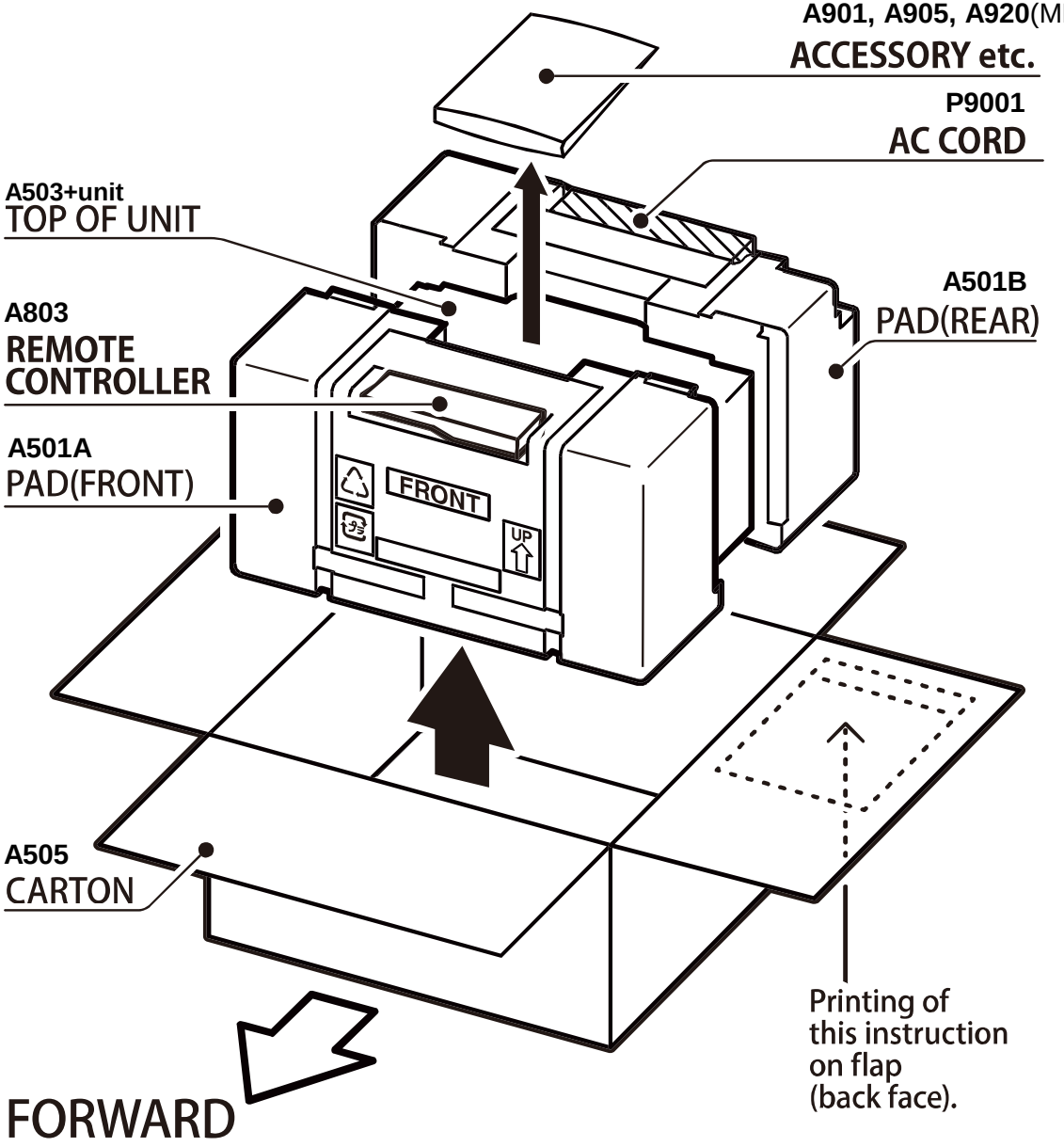

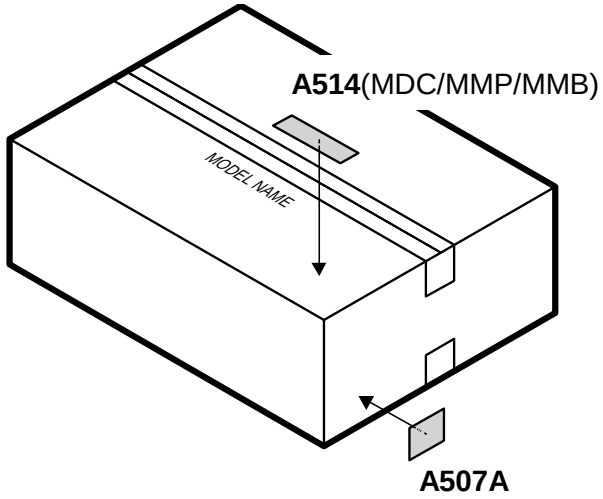

Exploded View

Overview

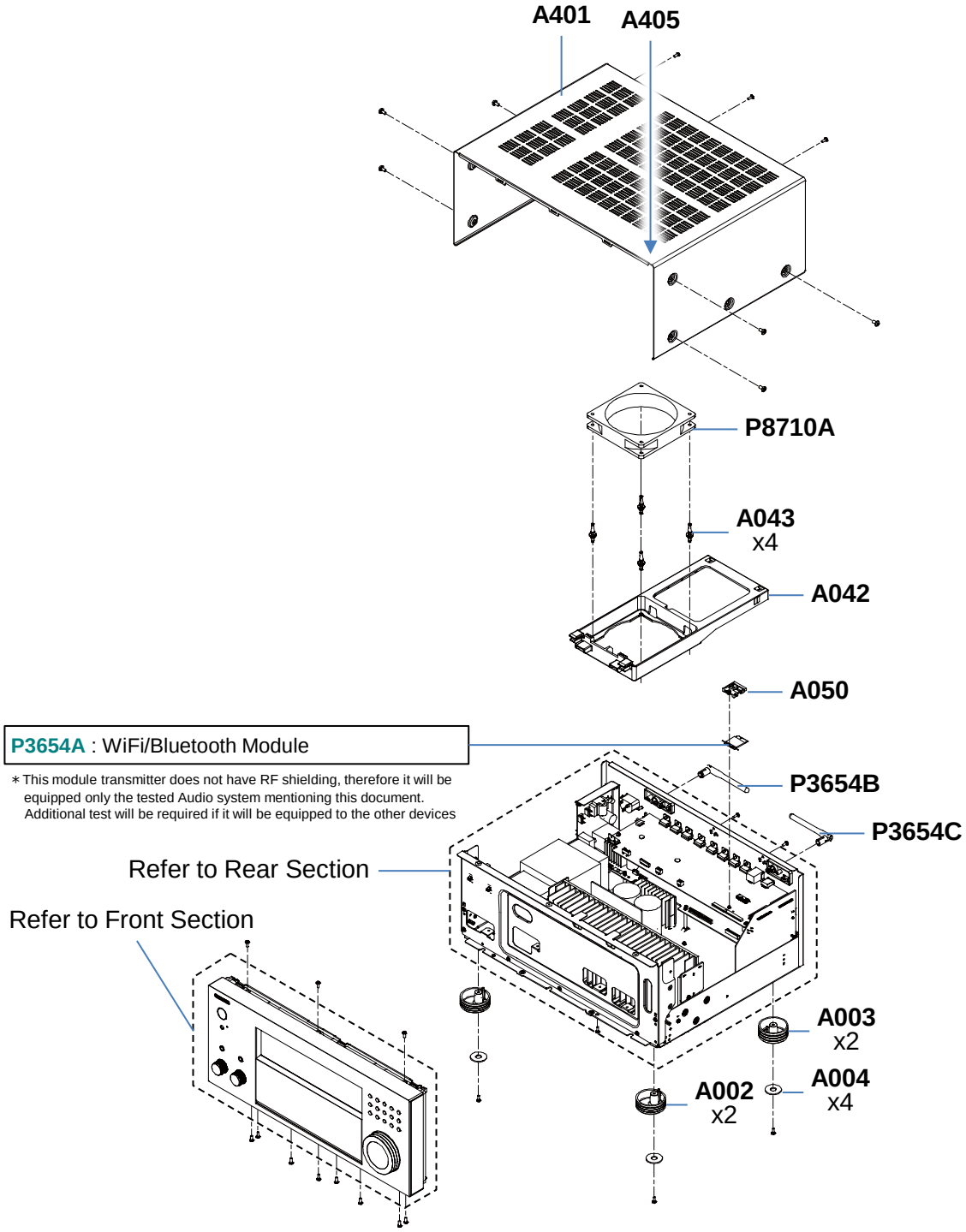

∗WiFi & Bluetooth Module has already been certificated by FCC and IC.

Information to the user.
Indicate "Contains FCC ID: TX2-RTL8821AE", "Contains IC: 6317A-RTL8821AE" and following information to the host device installed.

This device complies with part 15 of the FCC Rules. Operation is subject to the following two conditions: (1) This device may not cause harmful interference, and (2) this device must accept any interference received, including interference that may cause undesired operation.

Describe the following sentence to a user's manual of the host device.

[For FCC]
FCC CAUTION
Changes or modifications not expressly approved by the party responsible for compliance could void the user's authority to operate the equipment.

Note: This equipment has been tested and found to comply with the limits for a Class B digital device, pursuant to part 15 of the FCC Rules. These limits are designed to provide reasonable protection against harmful interference in a residential installation. This equipment generates, uses and can radiate radio frequency energy and, if not installed and used in accordance with the instructions, may cause harmful interference to radio communications. However, there is no guarantee that interference will not occur in a particular installation. If this equipment does cause harmful interference to radio or television reception, which can be determined by turning the equipment off and on, the user is encouraged to try to correct the interference by one or more of the following measures:
—Reorient or relocate the receiving antenna.
—Increase the separation between the equipment and receiver.
—Connect the equipment into an outlet on a circuit different from that to which the receiver is connected.
—Consult the dealer or an experienced radio/TV technician for help.

This transmitter must not be co-located or operated in conjunction with any other antenna or transmitter.

This equipment complies with FCC radiation exposure limits set forth for an uncontrolled environment and meets the FCC radio frequency (RF) Exposure Guidelines in Supplement C to OET65. This equipment has very low levels of RF energy that it deemed to comply without maximum permissive exposure evaluation (MPE). But it is desirable that it should be installed and operated keeping the radiator at least 20cm or more away from person's body (excluding extremities: hands, wrists, feet and ankles).

[For IC]
CAN ICES-3 B/NMB-3 B

This device complies with Industry Canada licence-exempt RSS standard(s). Operation is subject to the following two conditions: (1) this device may not cause interference, and (2) this device must accept any interference, including interference that may cause undesired operation of the device.

Le présent appareil est conforme aux CNR d'Industrie Canada applicables aux appareils radio exempts dlicence. L'exploitation est autorisée aux deux conditions suivantes : (1) l'appareil ne doit pas produire de brouillage, et (2) l'utilisateur de l'appareil doit accepter tout brouillage radioélectrique subi, même si le brouillage est susceptible d'en compromettre le fonctionnement.

This equipment complies with IC radiation exposure limits set forth for an uncontrolled environment and meets RSS-102 of the IC radio frequency (RF) Exposure rules. This equipment has very low levels of RF energy that it deemed to comply without maximum permissive exposure evaluation (MPE). But it is desirable that it should be installed and operated keeping the radiator at least 20cm or more away from person's body (excluding extremities: hands, wrists, feet and ankles).
Cet équipement est conforme aux limites d'exposition aux rayonnements énoncées pour un environnement non contrôlé et respecte les règles d'exposition aux fréquences radioélectriques (RF) CNR-102 de l'IC. Cet équipement émet une énergie RF très faible qui est considérée conforme sans évaluation de l'exposition maximale autorisée. Cependant, cet équipement doit être installé et utilisé en gardant une distance de 20 cm ou plus entre le dispositif rayonnant et le corps (à l'exception des extrémités : mains, poignets, pieds et chevilles).

Front Section 1

Exploded View

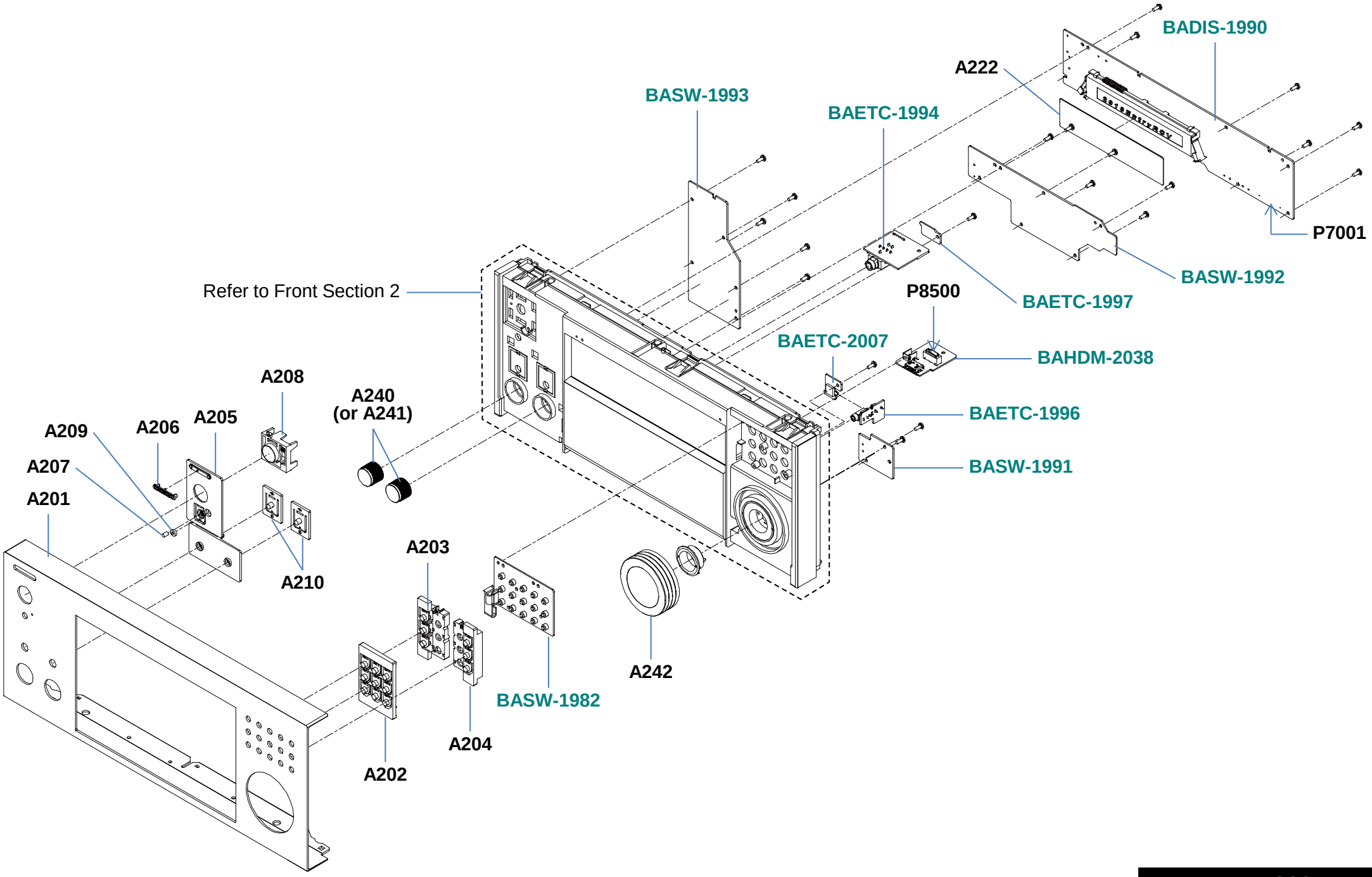

TX-RZ820

Front Section 2

Exploded View

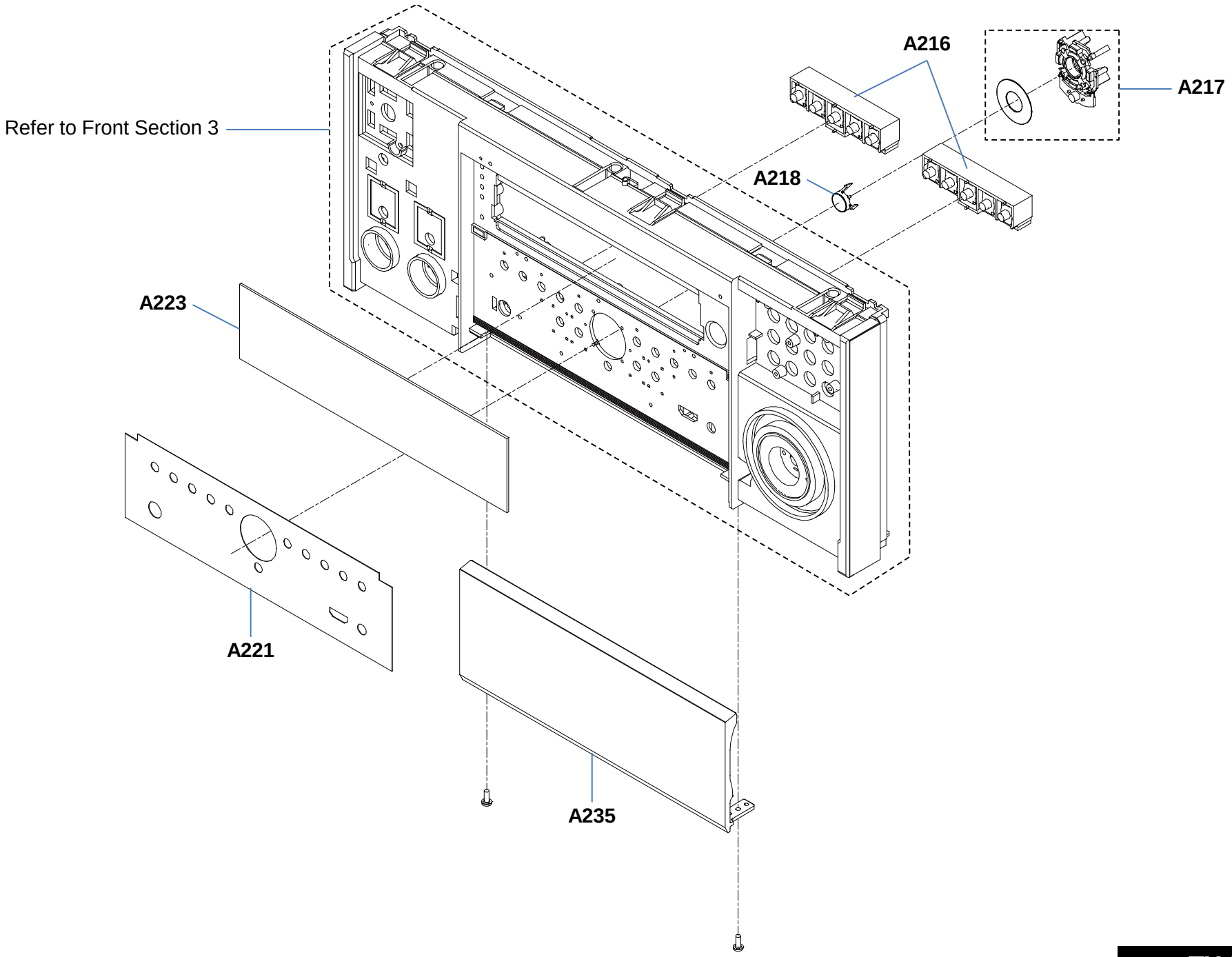

TX-RZ820

Front Section 3

Exploded View

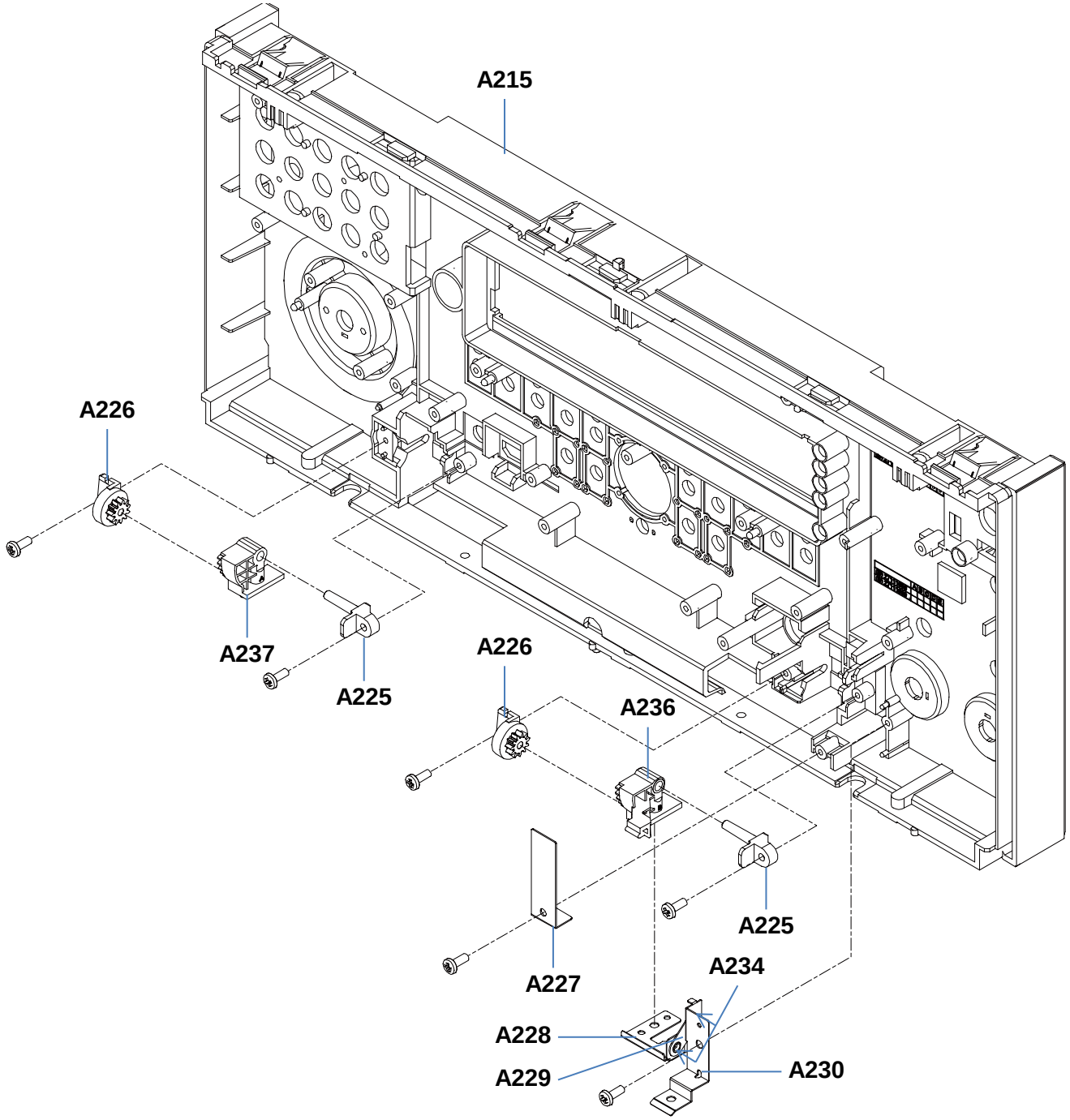

TX-RZ820

Rear Section 1

Exploded View

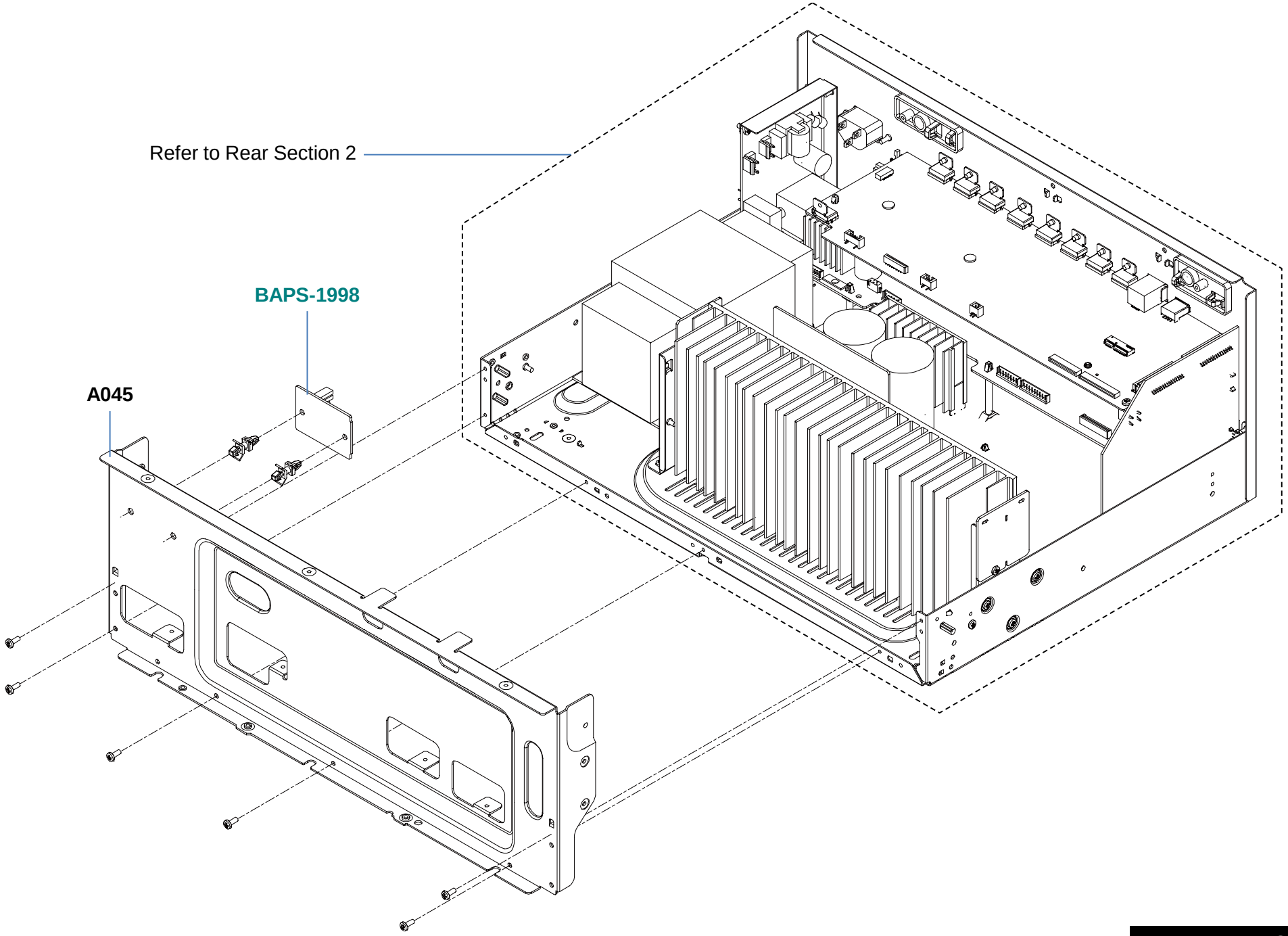

TX-RZ820

Rear Section 2

Exploded View

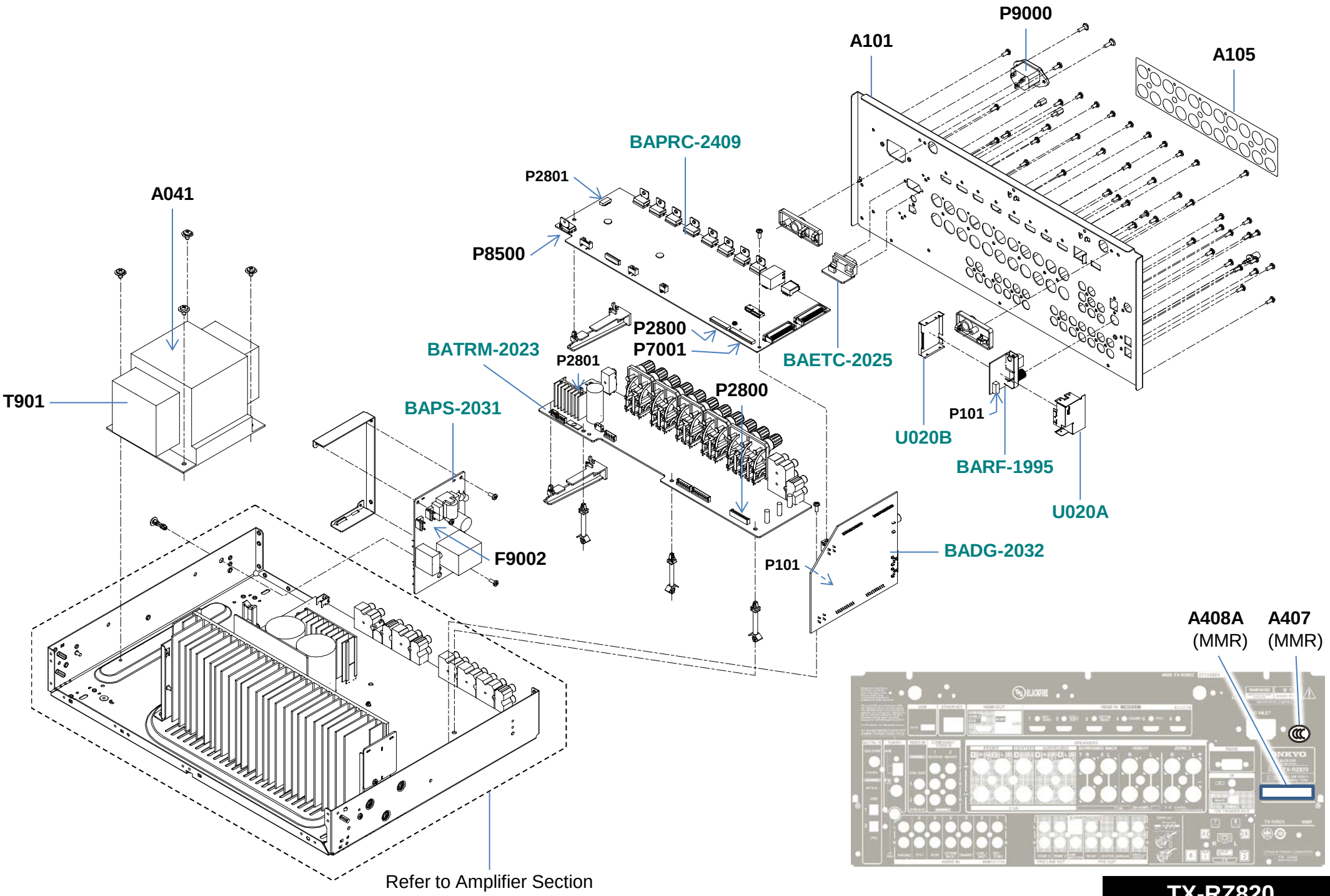

TX-RZ820

Exploded View

Amplifier Section

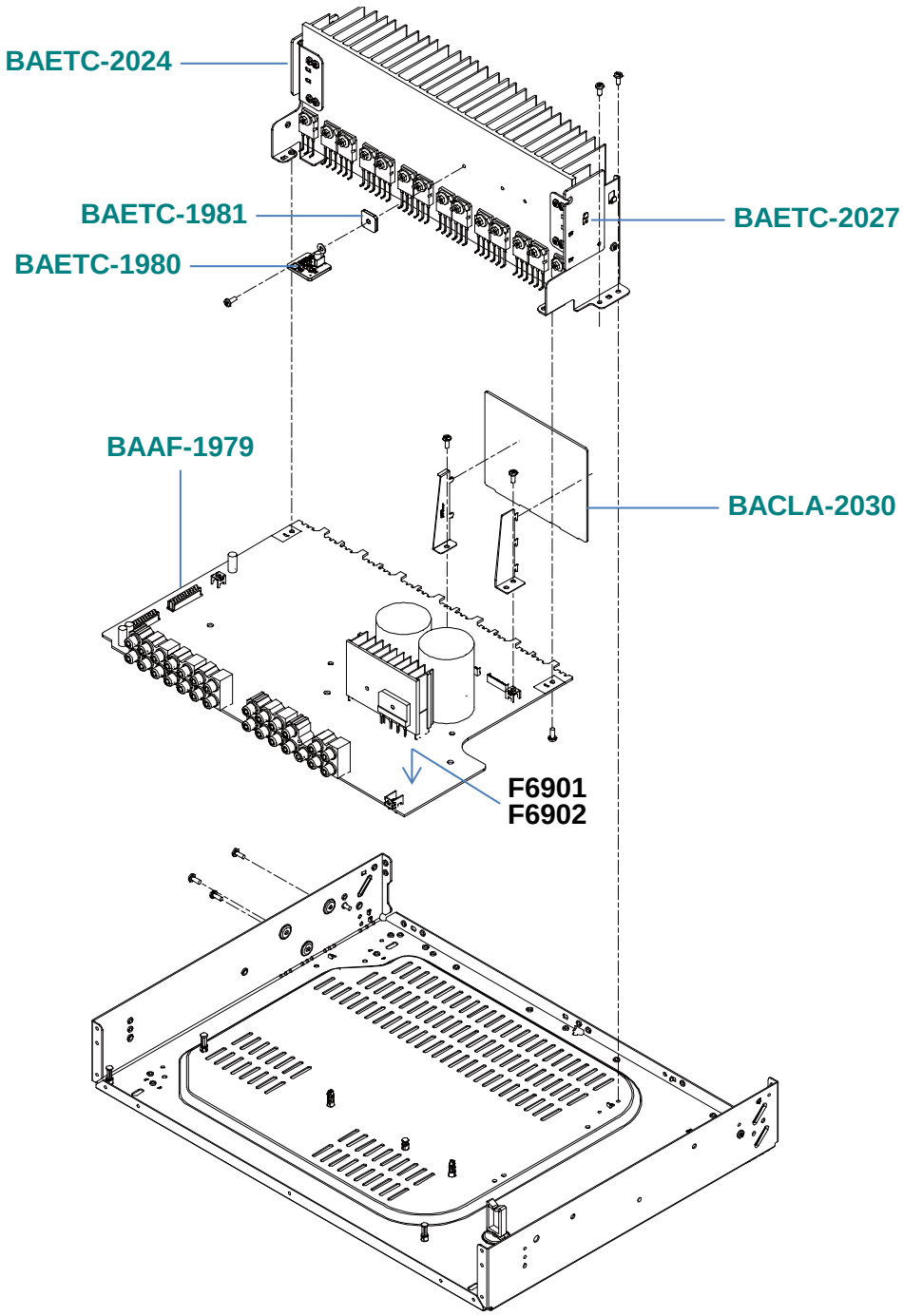

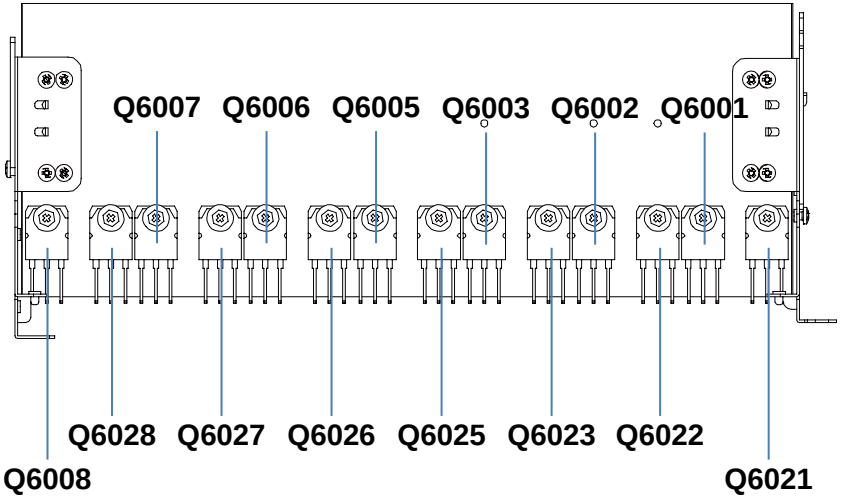

TX-RZ820

Notation button operation

Use the following expressions to simplify the description of the button operation.

E.g.1)

[TV] + [ON/STANDBY] → [BD/DVD]

This means "While holding down TV button, press ON/STANDBY button then release both buttons and then press BD/DVD button".

E.g.2)

[DISPLAY] + [ON/STANDBY] x 2 → [DIMMER]

This means "While holding down DISPLAY button, press ON/STANDBY button twice then release both buttons and then press DIMMER button".

Reset

Step1. STORE (To save user preferences.)

[SETUP] + [ENTER] x2

Step2. RESET

1. [TV] + [ON/STANDBY] with Volume 40
2. [ON/STANDBY]

※) ”All Clear” appears on the display and the unit returns to standby. Do not unplug the power cord until “All Clear” disappears from the display.

Step3. RECALL (To load user preferences.)

[SETUP] + [RETURN] x2

MAIN checksum verification.

[DIMMER] + [ON/STANDBY] x 2 → [ENTER]

Temperature sensor check

[DIMMER] + [ON/STANDBY] x 2 → [TONE]

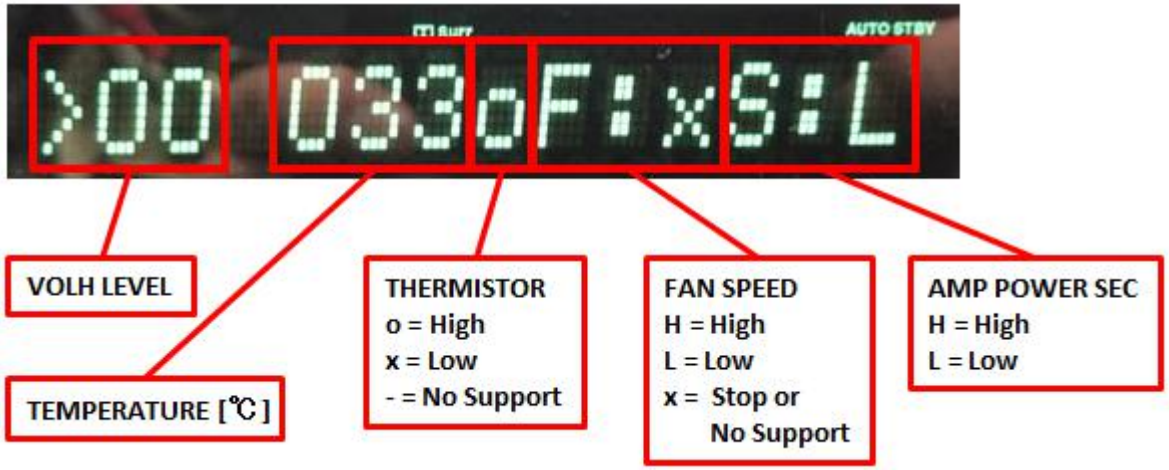

Key operation check

TEST 1-06

Set Volume 40

[TV] + [ON/STANDBY]

Display “TEST-”

[BD/DVD]

Display “TEST 1-00”

In the test mode, turning rotary encoder for TONE to the right is TEST MODE UP and turning rotary encoder for TONE to the left is TEST MODE DOWN.

※)

If "ON/STANDBY" button is pressed, AVR escapes from this KEY test mode.

Therefor, press the "ON/STANDBY" button, after checking other buttons finished.

Check the FL tube and LED.

Confirm that all LEDs and all segments of FL tube are lit.

1. Set Volume 40
2. [TV] + [ON/STANDBY] → [Dimmer]

Check the FL tube.

1。Set Volume 40

2。[TV] + [ON/STANDBY] → [DIMMER]

[TONE +] = Step UP

[TONE -] = Step DOWN

The contents of the step are as follows.

1。Lit all segment.

2。Lit '23456789ABCDEF'.

3。Lit a even number segment.

4。Lit an odd number segment.

5。The Destination setting is displayed.

TX-RZ820(B)MDC

<Note>

1. Parts marked by "**NSP**" are generally unavailable because they are not in our Master Spare Parts List.
2. The ! mark found on some component parts indicates the importance of the safety factor of the part.
   Therefore, when replacing, be sure to use parts of identical designation.

: NSP

(B) : Black color model
<MDC> : 120V
Canadian/USA/(Mexico) model

REF. NO.	PART NAME	DESCRIPTION	Q'TY	PART NO. (SN)		REMARKS
[Cabinet, Chassis, Screws, Nuts]						
A001	CHASSIS	TX-NR555	1	27100602		NSP
A002	BOTTOM LEG	(FRONT)	2	27175477A	N	
A003	BOTTOM LEG	(REAR)	2	27175478A		
A004	CUSHION	(CORK)D25*9*T2	4	28141968		
A005	SCREW	3TTB+8B(3BC)	4	838430088GR		NSP
A006	HOLDER	(CPS-8)	2	27191383		NSP
A006or	HOLDER	KGLS-8RT	(2)	27190503A		NSP
A007	HOLDER	(NPS-8)	2	27191387		NSP
A007or	HOLDER	KGPS-8RF	(2)	27191044	N	NSP
A010	HOLDER	(NPS-14)	2	27191388		NSP
A010or	HOLDER	KGPS-14RF	(2)	27190802		NSP
A012	HOLDER	(CPS-12)	1	27191385		NSP
A012or	HOLDER	KGLS-12RT	(1)	27190266		NSP
A014	HOLDER	(PGS-22)	3	27191382		NSP
A014or	HOLDER	KGLS-22S	(3)	27190369	N	NSP
A016	HEAT SINK	TX-RZ810	1	27160705	N	NSP
A017	RETAINER	(HR)TX-NR656	1	27142349		NSP
A018	RETAINER	(HL)TX-NR656	1	27142350		NSP
A019	SCREW	3SMH10W.SW+15B(CU)	14	801606		NSP
A020	SCREW	3TTB+8B(3BC)	4	838430088GR		NSP
A021	SCREW	3TTB+8B(3BC)	1	838430088GR		NSP
A022	SCREW	3TTB+8B(3BC)	2	838430088GR		NSP
A023	SCREW	3TTB+8B(3BC)	2	838430088GR		NSP
A024	RETAINER	(B)	1	27142141A		NSP
A025	SCREW	3TTB+8B(3BC)	2	838430088GR		NSP
A026	SCREW	3TTB+8B(3BC)	1	838430088GR		NSP
A027	SCREW	3TTB+8B(3BC)	3	838430088GR		NSP
A028	SCREW	3TTB+8B(3CM)SR	2	801637		NSP
A029	RETAINER	(PS)TX-NR656	1	27142351		NSP
A030	SCREW	3TTB+8B(3BC)	3	838430088GR		NSP
A031	SCREW	4TTC+8C(3BC)SR	4	801658		NSP
A032	HOLDER	(ANNTENA-1)	1	27191416		NSP
A033	HOLDER	(ANNTENA-2)	1	27191417		NSP
A035	HOLDER	(PRC)	2	27191419A		NSP
A036A	LABEL	(E-CON)	1	29364978		NSP
A037	WIRE TIE	BSK-1	8	260208		NSP
A038	TAPE	TAPE(CLOTH-16U)	0.1	29110083		NSP
A041	LABEL	(PT)ONKYO	1	29392594		
A042	BRACKET	(FAN)727	1	27131133A		NSP
A043	BUSHING	(FAN-L)	4	28170091A		NSP
A044	CUSHION	(FELT)t1x20x10	2	28141859		NSP
A045	BRACKET	(F)TX-RZ810	1	27131161		NSP
A046	SCREW	3TTB+8B(3BC)	6	838430088GR		NSP
A047	HOLDER	(PGS-6)	2	27191402		NSP

A047or	HOLDER	KGLS-6S	(2)	27190011		NSP
A048	CUSHION	(FELT)t2x13x5	2	28141858		NSP
A050	HOLDER	(PLUG)	1	27191418A		
A051	SCREW	2B+5FN(3CM)	1	82512005		NSP
A053	TAPE	TAPE(CLOTH-16U)	0.05	29110083		NSP
A054	TAPE	TAPE(CLOTH-16U)	0.06	29110083		NSP
A055	TAPE	TAPE(CLOTH-16U)	0.04	29110083		NSP
A101	REAR PANEL	(TXRZ820MDC)	1	27124880		
A102	SCREW	3TTB+8B(3BC)	40	838430088GR		NSP
A103	SCREW	3P+6FN(3BC)	8	82143006GR		NSP
A104	SCREW	3TTF+10B(3BC)	2	835430108GR		NSP
A105	LABEL	SP(11ch)_onk	1	29393161		
A106	TAPE	TAPE(CLOTH-8U)	0.02	29110082		NSP
A107	CUSHION	.	2	28141799		NSP
A108	TERMINAL	Eﾀｰﾐﾅﾙ	1	25060151		NSP
A109	WASHER	W3*10F(3BC)	1	87643010GR		NSP
A201	FRONT PANEL	(TXRZ820(B)DC/EU)	1	27213973		
A202	KNOB	(INP-C)(B)	1	28327272A	**N**	
A203	KNOB	(INP-L)(B)	1	28327274A	**N**	
A204	KNOB	(INP-R)(B)	1	28327276A	**N**	
A205	GUIDE	(STBY)(B)	1	27268323		NSP
A206	BADGE	(ONKYO)	1	28135338		
A207	KNOB	(PURE)	1	28327208	**N**	
A208	KNOB	(STBY)(B)	1	28327234		
A209	FACET	.	1	28198905		
A210	KNOB	(1)(B)	2	28327209		
A215	FRONT BRACKET	810(B)	1	27111638		
A216	KNOB	(5)(B)	2	28327225		
A217	KNOB	(CUR)AS BLACK	1	28326994C		
A217A	KNOB	(CUR) BLK	{1}	28326988A		NSP
A217B	KNOB	(CUR-BASE) BLK	{1}	28326986C	**N**	NSP
A218	KNOB	(ENTER) BLK	1	28326990		
A219	PLATE	(VOL)	1	27262931A		
A220	HOLDER	(PLT)	1	27191413A	**N**	NSP
A221	PLATE	(DOOR)(B)US_TXRZ810	1	27262934A		
A222	BACK PLATE	.(B)	1	28133428		
A223	CLEAR PLATE	TX-RZ810	1	28192475		
A225	SHAFT	.	2	27260383		NSP
A226	DAMPER	(11.3)	2	27301969		NSP
A227	RETAINER	(SPRING)	1	27142345A		NSP
A228	RETAINER	(DOOR)	1	27142341		NSP
A229	RETAINER	(LINK)	1	27142342		NSP
A230	RETAINER	(ERH-L)	1	27142343		NSP
A231	SPACER	(PC)D7*d4*t0.25	1	27270575		NSP
A232	SCREW	3TTB+8B(3BC)	26	838430088GR		NSP
A233	SCREW	3TTB+8B(3BC)	8	838430088GR		NSP
A234	RIVET	R3035B	2	880062	**N**	NSP
A235	DOOR	(B)	1	28148858		
A236	HOLDER	(L)	1	27191411B		NSP
A237	HOLDER	(R)	1	27191412A		NSP
A238	IB CUSHION	W15*3t TAPE	0.01	28141585A		NSP
A240	KNOB	(TONE)(B)AS	1	28327232		
A240A	KNOB	(TONE)(B)	{1}	28327211	**N**	NSP
A240B	SPRING	.	{1}	27180575		
A241	KNOB	(TONE)(B)AS	1	28327232		

A241A	KNOB	(TONE)(B)	{1}	28327211	N	NSP
A241B	SPRING	.	{1}	27180575		
A242	KNOB	(VOL)AS(B)	1	28327219		
A242A	KNOB	(VOL)CAP(B)	{1}	28327221	N	NSP
A242B	KNOB	(VOL)BASE	{1}	28327223	N	NSP
A242C	SPRING	.	{1}	27180575		
A245	SCREW	3TTB+10B(3BC)	2	838430108GR		NSP
A246	SCREW	3TTB+8B(3BC)	12	838430088GR		NSP
A247	CUSHION	(FELT)t1x20x10	2	28141859		NSP
A248	CUSHION	(PORON)8*3*T1.5	3	28141969		NSP
A249	TAPE	TAPE(CLOTH-8U)	0.1	29110082		NSP
A251	CUSHION	(T3*W35*D10)	1	28141741		NSP
A252	CUSHION	(LEG)	1	28141797		
A401	COVER	TXRZ810(B) (Bent)	1	28210152		
A401	COVER	TXRZ810(B) (Not Bent)	1	28210152Z		
A402	SCREW	3TTB+8B(3BC)	3	838430088GR		NSP
A403	SCREW	4TTB+8C(3BC)	6	838440089GR		NSP
A405	LABEL	(CAUTION)	1	29392531		
A409	CUSHION	(EVA)20*40*T7.5	2	28141973		NSP
A412	LABEL	(POP TXRZ820MDC)	<<1>>	29393660	N	NSP
[Semi-conductors]						
Q6001	TRANSISTOR	TTC0001(Q_T)TO3PN	1	2204130		
Q6001A	ISO SHEET	AC238	2	223024		
Q6001B	ISO SHEET	ISO SHEET	6	223050		
Q6002	TRANSISTOR	TTC0001(Q_T)TO3PN	1	2204130		
Q6003	TRANSISTOR	TTC0001(Q_T)TO3PN	1	2204130		
Q6005	TRANSISTOR	TTC0001(Q_T)TO3PN	1	2204130		
Q6006	TRANSISTOR	TTC0001(Q_T)TO3PN	1	2204130		
Q6007	TRANSISTOR	TTC0001(Q_T)TO3PN	1	2204130		
Q6008	TRANSISTOR	TTC0001(Q_T)TO3PN	1	2204130		
Q6021	TRANSISTOR	TTA0001(Q_T)TO3PN	1	2204120		
Q6022	TRANSISTOR	TTA0001(Q_T)TO3PN	1	2204120		
Q6023	TRANSISTOR	TTA0001(Q_T)TO3PN	1	2204120		
Q6025	TRANSISTOR	TTA0001(Q_T)TO3PN	1	2204120		
Q6026	TRANSISTOR	TTA0001(Q_T)TO3PN	1	2204120		
Q6027	TRANSISTOR	TTA0001(Q_T)TO3PN	1	2204120		
Q6028	TRANSISTOR	TTA0001(Q_T)TO3PN	1	2204120		
[Transformers, Coils]						
T901	POWER TRANSFORMER	NPT-1665D	1	2302145	!	
[Switches, Terminals, Wires]						
F6901	FUSE	12A-TUL-250V	1	252301GR	!	
F6901or	FUSE	12A-UL/T-314	(1)	252196GR	!	
F6902	FUSE	12A-TUL-250V	1	252301GR	!	
F6902or	FUSE	12A-UL/T-314	(1)	252196GR	!	
F9002	FUSE	10A-UL/T-233	1	252330GR	!	
F9002or	FUSE	10A-T/UL-ST2	(1)	252333GR	!	
F9002E	FUSELABEL	10A/125V	1	29362241	!	NSP
P101	FLEXIBLE FLAT CABLE	NCFC7-071012	1	2047071012		
P2800	FLEXIBLE FLAT CABLE	NCFC5-231012	1	2045231012		
P2801	FLEXIBLE FLAT CABLE	NCFC5-091012	1	2045091012		
P3654A	ASSEMBLED PWB	WCBN806L	1	24150135		
P3654B	WIFI BT ANTENNA	RFDPA870918EMLB302	1	2050102		
P3654C	WIFI BT ANTENNA	RFDPA870940EMLB303	1	2050103		
P7001	FLEXIBLE FLAT CABLE	NCFC5-313512	1	2045313512		
P8500	CORD ASSEMBLY	HDMI 0.50M	1	2010521		

P8710A	FAN	KF1225B1E-33ACFG9RB	1	24502336		
P9000	AC INLET	R301X2PSn	1	25053358	!	
P9000A	FASTON ASSEMBLY	FASTON SOCKET	1	1F999027		NSP
[Frontend, Units]						
U021	**PARENT PC BOARD AS**	**BAAF-1979-2Q-P**	**1**	**1B5141979-2Q**		**Parent**
BAAF-1979	Audio freqency circuit pc board AS	BAAF-1979-2Q	1	1B5141979-2Q-C		Child
BAETC-1980	Et cetra pc board AS	BAETC-1980-2Q	1	1B5141980-2Q-C		Child
BAETC-1981	Et cetra pc board AS	BAETC-1981-2Q	1	1B5141981-2Q-C		Child
U061	**PARENT PC BOARD AS**	**BADIS-1990-2A-P**	**1**	**1B5141990-2A**		**Parent**
BADIS-1990	Display circuit pc board AS	BADIS-1990-2A	1	1B5141990-2A-C		Child
BASW-1991	Switch circuit pc board AS	BASW-1991-2A	1	1B5141991-2A-C		Child
BASW-1992	Switch circuit pc board AS	BASW-1992-2A	1	1B5141992-2A-C		Child
BASW-1993	Switch circuit pc board AS	BASW-1993-2A	1	1B5141993-2A-C		Child
BAETC-1994	Et cetra pc board AS	BAETC-1994-2A	1	1B5141994-2A-C		Child
BARF-1995	Radio freqency circuit pc board AS	BARF-1995-2A	1	1B5141995-2A-C		Child
BAETC-1996	Et cetra pc board AS	BAETC-1996-2A	1	1B5141996-2A-C		Child
BAETC-1997	Et cetra pc board AS	BAETC-1997-2A	1	1B5141997-2A-C		Child
BAPS-1998	Power supply circuit pc board AS	BAPS-1998-2A	1	1B5141998-2A-C		Child
BASW-1982	Switch circuit pc board AS	BASW-1982-2A	1	1B5141982-2A-C		Child
BAETC-2007	Et cetra pc board AS	BAETC-2007-2A	1	1B5142007-2A-C		Child
U031	**PARENT PC BOARD AS**	**BATRM-2023-2Q-P**	**1**	**1B5142023-2Q**		**Parent**
BATRM-2023	Terminal circuit pc board AS	BATRM-2023-2Q	1	1B5142023-2Q-C		Child
BAETC-2024	Et cetra pc board AS	BAETC-2024-2Q	1	1B5142024-2Q-C		Child
BAETC-2025	Et cetra pc board AS	BAETC-2025-2Q	1	1B5142025-2Q-C		Child
BAETC-2027	Et cetra pc board AS	BAETC-2027-2Q	1	1B5142027-2Q-C		Child
U071	**PARENT PC BOARD AS**	**BACLA-2030-2A-P**	**1**	**1B5142030-2A**		**Parent**
BACLA-2030	ClassA amplifier circuit pc board AS	BACLA-2030-2A	1	1B5142030-2A-C		Child
BAPS-2031	Power supply circuit pc board AS	BAPS-2031-2A	1	1B5142031-2A-C		Child
U081	**PARENT PC BOARD AS**	**BADG-2032-2A-P**	**1**	**1B5142032-2A**		**Parent**
BADG-2032	Digital circuit pc board AS	BADG-2032-2A	1	1B5142032-2A-C		Child
U091	**PARENT PC BOARD AS**	**BAHDM-2038-2A-P**	**1**	**1B5142038-2A**		**Parent**
BAHDM-2038	HDMI circuit pc board AS	BAHDM-2038-2A	1	1B5142038-2A-C		Child
U041	**PARENT PC BOARD AS**	**BAPRC-2409-1G-P**	**1**	**1B5142409-1G**		**Parent**
BAPRC-2409	Processing circuit pc board AS	BAPRC-2409-1G	1	1B5142409-1G-C		Child
U020A	SHIELD CASE	(UPPER)	1	27225208		
U020B	SHIELD CASE	(TUNER-BTM)	1	27225207A		
[Packing]						
A501	PAD	(AS)TXRZ810	1	29092742B	**N**	
A501A	PAD	(F)TXRZ810	{1}	29092743A		
A501B	PAD	(R)TXRZ810	{1}	29092744B		
A503	SHEET	T1.015*1300*800	1	29096134	**N**	
A504	TAPE	(SEROHAN)NITTO NO.29	0.3	29110149		NSP
A505	CARTON	TXRZ820DC	1	29055757	**N**	
A506	POLYPROPYLENE TAPE	W50 SBT-70	2	29110200		NSP
A507A	UPC LABEL	TXRZ820(B)MDC	1	29393487		
A514	LABEL	(fwup)2017_o	1	29393672		
[Accessories]						
P9001	POWER SUPPLY CORD	AS-UC-2	1	253352ATES	!	
A801	POLY BAG	(W250xD350)LDPE	1	29100272		NSP
A802	TAPE	(SEROHAN)NITTO NO.29	0.2	29110149		NSP
A803	REMOTE CONTROL TRANSMITTER	RC-911R	1	24140911		
A804	BATTERY	R03/AAA(UM-4)	2	3010124		NSP
A805	MIC	KHM0028-010020	1	245048A		
A806	ANTENNA COIL	AM LOOP ANTENNA (S&O)	1	232216		
A806or	ANTENNA COIL	AM LOOP-ANTENNA	(1)	232207		

A807	FM ANT AS	Type W	1	292191		
A810	WARRANTY CARD	(ONKYO RZ-SERIES)	1	29365230A		NSP
A901	INSTRUCTION MANUAL	En(TXRZ820)_BAS	1	29402790	**N**	
A902	INSTRUCTION MANUAL	U2FrEs(TXRZ820)_BAS	1	29402791	**N**	
A905	INSTRUCTION MANUAL	QSG_U8(TXRZ820)	1	29402796	**N**	
A910	INSTRUCTION MANUAL	SAFETY_U4(2017 Ent-ONK)	1	29402751		
A920	INSTRUCTION SHEET	(Chromecast built-in)	1	29355977		
A921	INSTRUCTION SHEET	(DTS PlayFi)	1	29355978		
A922	INSTRUCTION SHEET	Note_EnFrEs(Z2SPAB)	1	29355985	**N**	

BAAF-1979-2Q

<Note>

1. Parts marked by "**NSP**" are generally unavailable because they are not in our Master Spare Parts List.
2. The ! mark found on some component parts indicates the importance of the safety factor of the part.
   Therefore, when replacing, be sure to use parts of identical designation.

: NSP

REF. NO.	PART NAME	DESCRIPTION	Q'TY	PART NO. (SN)	REMARKS
[Semi-conductors]					
D4201	CHIP TYPE DIODE	DA2J10100	1	223303R2	NSP
D4202	CHIP TYPE DIODE	DA2J10100	1	223303R2	NSP
D4217	CHIP TYPE DIODE	DA2J10100	1	223303R2	NSP
D4218	CHIP TYPE DIODE	DA2J10100	1	223303R2	NSP
D4251	DIODE	RL1N4003	1	22380260T	NSP
D4252	DIODE	RL1N4003	1	22380260T	NSP
D4253	DIODE	RL1N4003	1	22380260T	NSP
D4254	DIODE	RL1N4003	1	22380260T	NSP
D4255	CHIP TYPE DIODE	DA2J10100	1	223303R2	NSP
D4256	CHIP TYPE DIODE	DA2J10100	1	223303R2	NSP
D4257	ZENER DIODE	DZ2J075M0L	1	224760750R2	NSP
D4258	ZENER DIODE	DZ2J075M0L	1	224760750R2	NSP
D5085	ZENER DIODE	DZ2J056M0L	1	224760560R2	NSP
D5085or	ZENER DIODE	UDZS5.6B	(1)	224550560R2	NSP
D5086	ZENER DIODE	DZ2J056M0L	1	224760560R2	NSP
D5086or	ZENER DIODE	UDZS5.6B	(1)	224550560R2	NSP
D5087	ZENER DIODE	DZ2J056M0L	1	224760560R2	NSP
D5087or	ZENER DIODE	UDZS5.6B	(1)	224550560R2	NSP
D5088	ZENER DIODE	DZ2J056M0L	1	224760560R2	NSP
D5088or	ZENER DIODE	UDZS5.6B	(1)	224550560R2	NSP
D6601	CHIP TYPE DIODE	DA2J10100	1	223303R2	NSP
D6601or	CHIP TYPE DIODE	1SS352	(1)	223234R2	NSP
D6602	CHIP TYPE DIODE	DA2J10100	1	223303R2	NSP
D6602or	CHIP TYPE DIODE	1SS352	(1)	223234R2	NSP
D6603	CHIP TYPE DIODE	DA2J10100	1	223303R2	NSP
D6603or	CHIP TYPE DIODE	1SS352	(1)	223234R2	NSP
D6605	CHIP TYPE DIODE	DA2J10100	1	223303R2	NSP
D6605or	CHIP TYPE DIODE	1SS352	(1)	223234R2	NSP
D6606	CHIP TYPE DIODE	DA2J10100	1	223303R2	NSP
D6606or	CHIP TYPE DIODE	1SS352	(1)	223234R2	NSP
D6607	CHIP TYPE DIODE	DA2J10100	1	223303R2	NSP

D6607or	CHIP TYPE DIODE	1SS352	(1)	223234R2	NSP
D6608	CHIP TYPE DIODE	DA2J10100	1	223303R2	NSP
D6608or	CHIP TYPE DIODE	1SS352	(1)	223234R2	NSP
D6621	CHIP TYPE DIODE	DA2J10100	1	223303R2	NSP
D6621or	CHIP TYPE DIODE	1SS352	(1)	223234R2	NSP
D6622	CHIP TYPE DIODE	DA2J10100	1	223303R2	NSP
D6622or	CHIP TYPE DIODE	1SS352	(1)	223234R2	NSP
D6623	CHIP TYPE DIODE	DA2J10100	1	223303R2	NSP
D6623or	CHIP TYPE DIODE	1SS352	(1)	223234R2	NSP
D6625	CHIP TYPE DIODE	DA2J10100	1	223303R2	NSP
D6625or	CHIP TYPE DIODE	1SS352	(1)	223234R2	NSP
D6626	CHIP TYPE DIODE	DA2J10100	1	223303R2	NSP
D6626or	CHIP TYPE DIODE	1SS352	(1)	223234R2	NSP
D6627	CHIP TYPE DIODE	DA2J10100	1	223303R2	NSP
D6627or	CHIP TYPE DIODE	1SS352	(1)	223234R2	NSP
D6628	CHIP TYPE DIODE	DA2J10100	1	223303R2	NSP
D6628or	CHIP TYPE DIODE	1SS352	(1)	223234R2	NSP
D6703	ZENER DIODE	DZ2J036M0L	1	224760360R2	NSP
D6704	CHIP TYPE DIODE	DA2J10100	1	223303R2	NSP
D6705	CHIP TYPE DIODE	DA2J10100	1	223303R2	NSP
D6706	CHIP TYPE DIODE	DA2J10100	1	223303R2	NSP
D6707	ZENER DIODE	DZ2J100M0L	1	224761000R2	NSP
D6740	CHIP TYPE DIODE	DA2J10100	1	223303R2	NSP
D6741	CHIP TYPE DIODE	DA2J10100	1	223303R2	NSP
D6761	CHIP TYPE DIODE	DA2J10100	1	223303R2	NSP
D6761or	CHIP TYPE DIODE	1SS352	(1)	223234R2	NSP
D6762	CHIP TYPE DIODE	DA2J10100	1	223303R2	NSP
D6762or	CHIP TYPE DIODE	1SS352	(1)	223234R2	NSP
D6763	CHIP TYPE DIODE	DA2J10100	1	223303R2	NSP
D6763or	CHIP TYPE DIODE	1SS352	(1)	223234R2	NSP
D6765	CHIP TYPE DIODE	DA2J10100	1	223303R2	NSP
D6765or	CHIP TYPE DIODE	1SS352	(1)	223234R2	NSP
D6766	CHIP TYPE DIODE	DA2J10100	1	223303R2	NSP
D6766or	CHIP TYPE DIODE	1SS352	(1)	223234R2	NSP
D6767	CHIP TYPE DIODE	DA2J10100	1	223303R2	NSP
D6767or	CHIP TYPE DIODE	1SS352	(1)	223234R2	NSP
D6768	CHIP TYPE DIODE	DA2J10100	1	223303R2	NSP
D6768or	CHIP TYPE DIODE	1SS352	(1)	223234R2	NSP
D6780	ZENER DIODE	DZ2J033M0L	1	224760330R2	NSP
D6901	DIODE	LN25XB60	1	22380345	
D6901A	HEAT SINK	700(20x75x50)	1	27160693	NSP
D6901B	SCREW	3P+10FN(3BC)	1	82143010GR	NSP
D6911	CHIP TYPE DIODE	DA2J10100	1	223303R2	NSP
D6911or	CHIP TYPE DIODE	1SS352	(1)	223234R2	NSP
Q4001	HYBRID IC	BD34704KS2	1	22242977R3	
Q4002	HYBRID IC	NJW1194	1	22242893R2	
Q4003	HYBRID IC	NJW1194	1	22242893R2	
Q4004	HYBRID IC	NJM4580CG	1	22242922R2	NSP
Q4005	HYBRID IC	NJM4580CG	1	22242922R2	NSP
Q4008	HYBRID IC	NJM4580CG	1	22242922R2	NSP
Q4101	TRANSISTOR	RTAN430C-T112-1	1	2217780R2	NSP
Q4102	TRANSISTOR	RTAN430C-T112-1	1	2217780R2	NSP
Q4103	TRANSISTOR	RTAN430C-T112-1	1	2217780R2	NSP
Q4104	TRANSISTOR	RTAN430C-T112-1	1	2217780R2	NSP
Q4105	TRANSISTOR	RTAN430C-T112-1	1	2217780R2	NSP

Q4106	TRANSISTOR	RTAN430C-T112-1	1	2217780R2	NSP
Q4107	TRANSISTOR	RTAN430C-T112-1	1	2217780R2	NSP
Q4108	TRANSISTOR	RTAN430C-T112-1	1	2217780R2	NSP
Q4111	TRANSISTOR	RTAN430C-T112-1	1	2217780R2	NSP
Q4112	TRANSISTOR	RTAN430C-T112-1	1	2217780R2	NSP
Q4113	TRANSISTOR	RTAN430C-T112-1	1	2217780R2	NSP
Q4114	TRANSISTOR	RTAN430C-T112-1	1	2217780R2	NSP
Q4115	TRANSISTOR	RTAN430C-T112-1	1	2217780R2	NSP
Q4116	TRANSISTOR	RTAN430C-T112-1	1	2217780R2	NSP
Q4117	TRANSISTOR	RTAN430C-T112-1	1	2217780R2	NSP
Q4118	TRANSISTOR	RTAN430C-T112-1	1	2217780R2	NSP
Q4201	TRANSISTOR	KRC105S	1	2217290R2	NSP
Q4201or	TRANSISTOR	DTC123JCAT116	(1)	2219040R2	NSP
Q4202	TRANSISTOR	KRC105S	1	2217290R2	NSP
Q4202or	TRANSISTOR	DTC123JCAT116	(1)	2219040R2	NSP
Q4223	TRANSISTOR	RTAN430C-T112-1	1	2217780R2	NSP
Q4225	TRANSISTOR	RTAN430C-T112-1	1	2217780R2	NSP
Q4226	TRANSISTOR	RTAN430C-T112-1	1	2217780R2	NSP
Q4233	TRANSISTOR	RTAN430C-T112-1	1	2217780R2	NSP
Q4235	TRANSISTOR	RTAN430C-T112-1	1	2217780R2	NSP
Q4236	TRANSISTOR	RTAN430C-T112-1	1	2217780R2	NSP
Q4251	HYBRID IC	78M15HF(NJM78M15FA)	1	222780155JRC	
Q4251A	HEAT SINK	RAD-196	1	27160545	NSP
Q4251B	SCREW	3TTB+8B(3BC)	1	838430088GR	NSP
Q4252	HYBRID IC	79M15HF(NJM79M15FA)	1	222790155JRC	
Q4252B	SCREW	3TTB+8B(3BC)	1	838430088GR	NSP
Q4253	TRANSISTOR	INC5001AP1-T111	1	2218100R2	NSP
Q4253or	TRANSISTOR	2SC2881-Y	(1)	2217564AR2	NSP
Q4253or	TRANSISTOR	KTC4373-Y	(1)	2218120R2	NSP
Q4254	TRANSISTOR	INA5001AP1-T111	1	2218030R2	NSP
Q4254or	TRANSISTOR	2SA1201-Y	(1)	2217554AR2	NSP
Q4254or	TRANSISTOR	KTA1661-Y	(1)	2217864R2	NSP
Q4301	TRANSISTOR	RTAN430C-T112-1	1	2217780R2	NSP
Q4302	TRANSISTOR	RTAN430C-T112-1	1	2217780R2	NSP
Q4303	TRANSISTOR	RTAN430C-T112-1	1	2217780R2	NSP
Q4304	TRANSISTOR	RTAN430C-T112-1	1	2217780R2	NSP
Q4530	HYBRID IC	NJM4580CG	1	22242922R2	NSP
Q5105	TRANSISTOR	2SC2713-BL	1	2213136R2	
Q5106	TRANSISTOR	2SC2713-BL	1	2213136R2	
Q5107	TRANSISTOR	2SC2713-BL	1	2213136R2	
Q5108	TRANSISTOR	2SC2713-BL	1	2213136R2	
Q5125	TRANSISTOR	2SC2713-BL	1	2213136R2	
Q5126	TRANSISTOR	2SC2713-BL	1	2213136R2	
Q5127	TRANSISTOR	2SC2713-BL	1	2213136R2	
Q5128	TRANSISTOR	2SC2713-BL	1	2213136R2	
Q5225	TRANSISTOR	INC5001AP1-T111	1	2218100R2	
Q5225or	TRANSISTOR	2SC2881-Y	(1)	2217564AR2	
Q5226	TRANSISTOR	INC5001AP1-T111	1	2218100R2	
Q5226or	TRANSISTOR	2SC2881-Y	(1)	2217564AR2	
Q5227	TRANSISTOR	INC5001AP1-T111	1	2218100R2	
Q5227or	TRANSISTOR	2SC2881-Y	(1)	2217564AR2	
Q5228	TRANSISTOR	INC5001AP1-T111	1	2218100R2	
Q5228or	TRANSISTOR	2SC2881-Y	(1)	2217564AR2	
Q5385	TRANSISTOR	INA6006AP1-T111	1	2217980R2	
Q5385or	TRANSISTOR	2SA1200-Y(2LONK_ZE)	(1)	2217584R2	

Q5386	TRANSISTOR	INA6006AP1-T111	1	2217980R2	
Q5386or	TRANSISTOR	2SA1200-Y(2LONK_ZE)	(1)	2217584R2	
Q5387	TRANSISTOR	INA6006AP1-T111	1	2217980R2	
Q5387or	TRANSISTOR	2SA1200-Y(2LONK_ZE)	(1)	2217584R2	
Q5388	TRANSISTOR	INA6006AP1-T111	1	2217980R2	
Q5388or	TRANSISTOR	2SA1200-Y(2LONK_ZE)	(1)	2217584R2	
Q5405	TRANSISTOR	INC6006AP1-T111	1	2217990R2	
Q5405or	TRANSISTOR	2SC2880-Y(2LONK_ZE)	(1)	2217594R2	
Q5406	TRANSISTOR	INC6006AP1-T111	1	2217990R2	
Q5406or	TRANSISTOR	2SC2880-Y(2LONK_ZE)	(1)	2217594R2	
Q5407	TRANSISTOR	INC6006AP1-T111	1	2217990R2	
Q5407or	TRANSISTOR	2SC2880-Y(2LONK_ZE)	(1)	2217594R2	
Q5408	TRANSISTOR	INC6006AP1-T111	1	2217990R2	
Q5408or	TRANSISTOR	2SC2880-Y(2LONK_ZE)	(1)	2217594R2	
Q5601	TRANSISTOR	2SD2704K	1	2218130R2	
Q5602	TRANSISTOR	2SD2704K	1	2218130R2	
Q5603	TRANSISTOR	2SD2704K	1	2218130R2	
Q5605	TRANSISTOR	2SD2704K	1	2218130R2	
Q5606	TRANSISTOR	2SD2704K	1	2218130R2	
Q5607	TRANSISTOR	2SD2704K	1	2218130R2	
Q5608	TRANSISTOR	2SD2704K	1	2218130R2	
Q5625	TRANSISTOR	2SC2713-BL	1	2213136R2	
Q5626	TRANSISTOR	2SC2713-BL	1	2213136R2	
Q5627	TRANSISTOR	2SC2713-BL	1	2213136R2	
Q5628	TRANSISTOR	2SC2713-BL	1	2213136R2	
Q5645	TRANSISTOR	2SA1163-BL	1	2216756R2	
Q5646	TRANSISTOR	2SA1163-BL	1	2216756R2	
Q5647	TRANSISTOR	2SA1163-BL	1	2216756R2	
Q5648	TRANSISTOR	2SA1163-BL	1	2216756R2	
Q6105	TRANSISTOR	TTC004B_Q(S	1	2218022	
Q6106	TRANSISTOR	TTC004B_Q(S	1	2218022	
Q6107	TRANSISTOR	TTC004B_Q(S	1	2218022	
Q6108	TRANSISTOR	TTC004B_Q(S	1	2218022	
Q6125	TRANSISTOR	TTA004B_Q(S	1	2218012	
Q6126	TRANSISTOR	TTA004B_Q(S	1	2218012	
Q6127	TRANSISTOR	TTA004B_Q(S	1	2218012	
Q6128	TRANSISTOR	TTA004B_Q(S	1	2218012	
Q6601	TRANSISTOR	INC6002AC1	1	2218840R2	
Q6602	TRANSISTOR	INC6002AC1	1	2218840R2	
Q6603	TRANSISTOR	INC6002AC1	1	2218840R2	
Q6605	TRANSISTOR	INC6002AC1	1	2218840R2	
Q6606	TRANSISTOR	INC6002AC1	1	2218840R2	
Q6607	TRANSISTOR	INC6002AC1	1	2218840R2	
Q6608	TRANSISTOR	INC6002AC1	1	2218840R2	
Q6700	TRANSISTOR	2SA1163-BL	1	2216756R2	
Q6705	TRANSISTOR	2SC2713-BL	1	2213136R2	
Q6706	TRANSISTOR	KRA102S	1	2216220R2	
Q6706or	TRANSISTOR	DTA114ECAT116	(1)	2218980R2	
Q6740	TRANSISTOR	2SC2713-BL	1	2213136R2	NSP
Q6741	TRANSISTOR	2SC2713-BL	1	2213136R2	NSP
Q6742	TRANSISTOR	2SA1163-BL	1	2216756R2	NSP
Q6800	HYBRID IC	LM61CIZ	1	22242212	
Q6800A	RETAINER	(PTH)	1	27141884-1	NSP
Q6801	TRANSISTOR	2SC2712-GR	1	2213145R2	NSP
Q6802	TRANSISTOR	2SA1162-GR	1	2214375R2	NSP

Q6911	TRANSISTOR	KRC105S	1	2217290R2	NSP
Q6911or	TRANSISTOR	DTC123JCAT116	(1)	2219040R2	NSP
[Transformers, Coils]					
L6441	SPEAKER OUTPUT FILTER COIL	SC2-0.8X5.5X18.5T	1	231455S	
L6441or	SPEAKER OUTPUT FILTER COIL	SC-0.8X5.5X18.5T	(1)	231431S	
L6442	SPEAKER OUTPUT FILTER COIL	SC2-0.8X5.5X18.5T	1	231455S	
L6442or	SPEAKER OUTPUT FILTER COIL	SC-0.8X5.5X18.5T	(1)	231431S	
L6443	SPEAKER OUTPUT FILTER COIL	SC2-0.8X5.5X18.5T	1	231455S	
L6443or	SPEAKER OUTPUT FILTER COIL	SC-0.8X5.5X18.5T	(1)	231431S	
L6445	SPEAKER OUTPUT FILTER COIL	SC2-0.8X5.5X18.5T	1	231455S	
L6445or	SPEAKER OUTPUT FILTER COIL	SC-0.8X5.5X18.5T	(1)	231431S	
L6446	SPEAKER OUTPUT FILTER COIL	SC2-0.8X5.5X18.5T	1	231455S	
L6446or	SPEAKER OUTPUT FILTER COIL	SC-0.8X5.5X18.5T	(1)	231431S	
L6447	SPEAKER OUTPUT FILTER COIL	SC2-0.8X5.5X18.5T	1	231455S	
L6447or	SPEAKER OUTPUT FILTER COIL	SC-0.8X5.5X18.5T	(1)	231431S	
L6448	SPEAKER OUTPUT FILTER COIL	SC2-0.8X5.5X18.5T	1	231455S	
L6448or	SPEAKER OUTPUT FILTER COIL	SC-0.8X5.5X18.5T	(1)	231431S	
[Capacitors]					
C4001	CHIP TYPE CERAMIC CAPACITOR	CC725CH1H-221J1	1	342102214R1	NSP
C4002	CHIP TYPE CERAMIC CAPACITOR	CC725CH1H-221J1	1	342102214R1	NSP
C4003	CHIP TYPE CERAMIC CAPACITOR	CC725CH1H-221J1	1	342102214R1	NSP
C4004	CHIP TYPE CERAMIC CAPACITOR	CC725CH1H-221J1	1	342102214R1	NSP
C4005	CHIP TYPE CERAMIC CAPACITOR	CC725CH1H-221J1	1	342102214R1	NSP
C4006	CHIP TYPE CERAMIC CAPACITOR	CC725CH1H-221J1	1	342102214R1	NSP
C4007	CHIP TYPE CERAMIC CAPACITOR	CC725CH1H-221J1	1	342102214R1	NSP
C4008	CHIP TYPE CERAMIC CAPACITOR	CC725CH1H-221J1	1	342102214R1	NSP
C4009	UPZ TYPE PLASTIC FILM CAPACITOR	2AUPZTF221JE	1	376332214T	NSP
C4010	UPZ TYPE PLASTIC FILM CAPACITOR	2AUPZTF221JE	1	376332214T	NSP
C4011	CHIP TYPE CERAMIC CAPACITOR	CC725CH1H-221J1	1	342102214R1	NSP
C4012	CHIP TYPE CERAMIC CAPACITOR	CC725CH1H-221J1	1	342102214R1	NSP
C4015	CHIP TYPE CERAMIC CAPACITOR	CC725CH1H-221J1	1	342102214R1	NSP
C4016	CHIP TYPE CERAMIC CAPACITOR	CC725CH1H-221J1	1	342102214R1	NSP
C4041	UTSP TYPE ELECTROLYTIC CAPACITOR	CE04W50V 47M(UTSP)	1	397584707AT	
C4042	UTSP TYPE ELECTROLYTIC CAPACITOR	CE04W50V 47M(UTSP)	1	397584707AT	
C4043	UTSP TYPE ELECTROLYTIC CAPACITOR	CE04W50V 47M(UTSP)	1	397584707AT	
C4044	UTSP TYPE ELECTROLYTIC CAPACITOR	CE04W50V 47M(UTSP)	1	397584707AT	
C4045	UTSP TYPE ELECTROLYTIC CAPACITOR	CE04W25V-47M(UTSP)	1	397554707AT	
C4046	UTSP TYPE ELECTROLYTIC CAPACITOR	CE04W25V-47M(UTSP)	1	397554707AT	
C4047	UTSP TYPE ELECTROLYTIC CAPACITOR	CE04W25V-47M(UTSP)	1	397554707AT	
C4048	UTSP TYPE ELECTROLYTIC CAPACITOR	CE04W25V-47M(UTSP)	1	397554707AT	
C4049	UTSP TYPE ELECTROLYTIC CAPACITOR	CE04W50V 47M(UTSP)	1	397584707AT	
C4050	UTSP TYPE ELECTROLYTIC CAPACITOR	CE04W50V 47M(UTSP)	1	397584707AT	
C4051	UTSP TYPE ELECTROLYTIC CAPACITOR	CE04W50V 47M(UTSP)	1	397584707AT	
C4052	UTSP TYPE ELECTROLYTIC CAPACITOR	CE04W50V 47M(UTSP)	1	397584707AT	
C4053	CHIP TYPE CERAMIC CAPACITOR	CK725B1H-102K1	1	332101025R1	NSP
C4054	CHIP TYPE CERAMIC CAPACITOR	CK725B1H-102K1	1	332101025R1	NSP
C4055	UTSP TYPE ELECTROLYTIC CAPACITOR	CE04W25V-47M(UTSP)	1	397554707AT	
C4056	UTSP TYPE ELECTROLYTIC CAPACITOR	CE04W25V-47M(UTSP)	1	397554707AT	
C4061	CHIP TYPE CERAMIC CAPACITOR	CC725CH1H-101J1	1	342101014R1	NSP
C4062	CHIP TYPE CERAMIC CAPACITOR	CC725CH1H-101J1	1	342101014R1	NSP
C4063	UTSP TYPE ELECTROLYTIC CAPACITOR	CE04W25V-47M(UTSP)	1	397554707AT	
C4064	UTSP TYPE ELECTROLYTIC CAPACITOR	CE04W25V-47M(UTSP)	1	397554707AT	
C4065	UTSP TYPE ELECTROLYTIC CAPACITOR	CE04W25V-47M(UTSP)	1	397554707AT	
C4066	UTSP TYPE ELECTROLYTIC CAPACITOR	CE04W25V-47M(UTSP)	1	397554707AT	
C4083	CHIP TYPE CERAMIC CAPACITOR	CC725CH1H-331J1	1	342103314R1	NSP

C4084	CHIP TYPE CERAMIC CAPACITOR	CC725CH1H-331J1	1	342103314R1	NSP
C4101	UTSP TYPE ELECTROLYTIC CAPACITOR	CE04W50V 47M(UTSP)	1	397584707AT	
C4102	UTSP TYPE ELECTROLYTIC CAPACITOR	CE04W50V 47M(UTSP)	1	397584707AT	
C4103	UTSP TYPE ELECTROLYTIC CAPACITOR	CE04W50V 47M(UTSP)	1	397584707AT	
C4104	UTSP TYPE ELECTROLYTIC CAPACITOR	CE04W50V-22M(UTSP)	1	397582207AT	
C4105	UTSP TYPE ELECTROLYTIC CAPACITOR	CE04W50V 47M(UTSP)	1	397584707AT	
C4106	UTSP TYPE ELECTROLYTIC CAPACITOR	CE04W50V 47M(UTSP)	1	397584707AT	
C4107	UTSP TYPE ELECTROLYTIC CAPACITOR	CE04W50V 47M(UTSP)	1	397584707AT	
C4108	UTSP TYPE ELECTROLYTIC CAPACITOR	CE04W50V 47M(UTSP)	1	397584707AT	
C4111	CHIP TYPE CERAMIC CAPACITOR	CC725CH1H-221J1	1	342102214R1	NSP
C4112	CHIP TYPE CERAMIC CAPACITOR	CC725CH1H-221J1	1	342102214R1	NSP
C4113	CHIP TYPE CERAMIC CAPACITOR	CC725CH1H-221J1	1	342102214R1	NSP
C4114	CHIP TYPE CERAMIC CAPACITOR	CC725CH1H-221J1	1	342102214R1	NSP
C4115	CHIP TYPE CERAMIC CAPACITOR	CC725CH1H-221J1	1	342102214R1	NSP
C4116	CHIP TYPE CERAMIC CAPACITOR	CC725CH1H-221J1	1	342102214R1	NSP
C4117	CHIP TYPE CERAMIC CAPACITOR	CC725CH1H-221J1	1	342102214R1	NSP
C4118	CHIP TYPE CERAMIC CAPACITOR	CC725CH1H-221J1	1	342102214R1	NSP
C4175	JAMICON TYPE ELECTROLYTIC CAPACITC	CE04W16V-220M	1	398542217T	
C4176	JAMICON TYPE ELECTROLYTIC CAPACITC	CE04W16V-220M	1	398542217T	
C4181	FILM C	C281H104J20A21A	1	376821044T	NSP
C4190	UTSP TYPE ELECTROLYTIC CAPACITOR	CE04W50V 47M(UTSP)	1	397584707AT	
C4191	CHIP TYPE CERAMIC CAPACITOR	CC725CH1H-221J1	1	342102214R1	NSP
C4192	CHIP TYPE CERAMIC CAPACITOR	CK725B1H-103K1	1	332101035R1	NSP
C4201	CHIP TYPE CERAMIC CAPACITOR	CK725B1H-104K1	1	332101045R1	NSP
C4202	CHIP TYPE CERAMIC CAPACITOR	CK725B1H-104K1	1	332101045R1	NSP
C4203	CHIP TYPE CERAMIC CAPACITOR	CK725B1H-102K1	1	332101025R1	NSP
C4204	CHIP TYPE CERAMIC CAPACITOR	CK725B1H-102K1	1	332101025R1	NSP
C4206	CHIP TYPE CERAMIC CAPACITOR	CK725B1H-102K1	1	332101025R1	NSP
C4207	CHIP TYPE CERAMIC CAPACITOR	CK725B1H-102K1	1	332101025R1	NSP
C4208	CHIP TYPE CERAMIC CAPACITOR	CK725B1H-102K1	1	332101025R1	NSP
C4209	CHIP TYPE CERAMIC CAPACITOR	CK725B1H-102K1	1	332101025R1	NSP
C4210	CHIP TYPE CERAMIC CAPACITOR	CK725B1H-102K1	1	332101025R1	NSP
C4211	CHIP TYPE CERAMIC CAPACITOR	CK725B1H-102K1	1	332101025R1	NSP
C4212	CHIP TYPE CERAMIC CAPACITOR	CK725B1H-102K1	1	332101025R1	NSP
C4213	CHIP TYPE CERAMIC CAPACITOR	CK725B1H-102K1	1	332101025R1	NSP
C4214	CHIP TYPE CERAMIC CAPACITOR	CK725B1H-103K1	1	332101035R1	NSP
C4223	UTSP TYPE ELECTROLYTIC CAPACITOR	CE04W50V 47M(UTSP)	1	397584707AT	
C4225	UTSP TYPE ELECTROLYTIC CAPACITOR	CE04W50V 47M(UTSP)	1	397584707AT	
C4226	UTSP TYPE ELECTROLYTIC CAPACITOR	CE04W50V 47M(UTSP)	1	397584707AT	
C4250	FILM C	C282A334J20A21A	1	376833344T	NSP
C4253	FILM C	C281H104J20A21A	1	376821044T	NSP
C4254	FILM C	C281H104J20A21A	1	376821044T	NSP
C4255	UTSP TYPE ELECTROLYTIC CAPACITOR	CE04W50V-10M(UTSP)	1	397581007AT	
C4256	UTSP TYPE ELECTROLYTIC CAPACITOR	CE04W50V-10M(UTSP)	1	397581007AT	
C4259	UTSP TYPE ELECTROLYTIC CAPACITOR	CE04W50V-22M(UTSP)	1	397582207AT	
C4260	UTSP TYPE ELECTROLYTIC CAPACITOR	CE04W50V-22M(UTSP)	1	397582207AT	
C4261	UTSP TYPE ELECTROLYTIC CAPACITOR	CE04W10V-470M(UTSP)	1	397534717T	
C4262	UTSP TYPE ELECTROLYTIC CAPACITOR	CE04W10V-470M(UTSP)	1	397534717T	
C4269	UTSP TYPE ELECTROLYTIC CAPACITOR	CE04W10V-220M(UTSP)	1	397532217AT	
C4270	UTSP TYPE ELECTROLYTIC CAPACITOR	CE04W10V-220M(UTSP)	1	397532217AT	
C4271	JAMICON TYPE ELECTROLYTIC CAPACITC	CE04W35V-2200M	1	398562227S	
C4271or	VR TYPE ELECTROLYTIC CAPACITOR	CE04W35V-2200M(VR)	(1)	394662227S	
C4272	JAMICON TYPE ELECTROLYTIC CAPACITC	CE04W35V-2200M	1	398562227S	
C4272or	VR TYPE ELECTROLYTIC CAPACITOR	CE04W35V-2200M(VR)	(1)	394662227S	
C4301	UTSP TYPE ELECTROLYTIC CAPACITOR	CE04W25V-47M(UTSP)	1	397554707AT	

C4302	UTSP TYPE ELECTROLYTIC CAPACITOR	CE04W25V-47M(UTSP)	1	397554707AT	
C4303	UTSP TYPE ELECTROLYTIC CAPACITOR	CE04W25V-47M(UTSP)	1	397554707AT	
C4304	UTSP TYPE ELECTROLYTIC CAPACITOR	CE04W25V-47M(UTSP)	1	397554707AT	
C4305	CHIP TYPE CERAMIC CAPACITOR	CK725B1H-332K1	1	332103325R1	NSP
C4306	CHIP TYPE CERAMIC CAPACITOR	CK725B1H-332K1	1	332103325R1	NSP
C4307	CHIP TYPE CERAMIC CAPACITOR	CK725B1H-104K1	1	332101045R1	NSP
C4308	CHIP TYPE CERAMIC CAPACITOR	CK725B1H-104K1	1	332101045R1	NSP
C4309	UTSP TYPE ELECTROLYTIC CAPACITOR	CE04W50V-4.7M(UTSP)	1	397580477AT	
C4310	UTSP TYPE ELECTROLYTIC CAPACITOR	CE04W50V-4.7M(UTSP)	1	397580477AT	
C4311	UTSP TYPE ELECTROLYTIC CAPACITOR	CE04W25V-47M(UTSP)	1	397554707AT	
C4312	UTSP TYPE ELECTROLYTIC CAPACITOR	CE04W25V-47M(UTSP)	1	397554707AT	
C4313	CHIP TYPE CERAMIC CAPACITOR	CC725CH1H-221J1	1	342102214R1	NSP
C4314	CHIP TYPE CERAMIC CAPACITOR	CC725CH1H-221J1	1	342102214R1	NSP
C4315	UTSP TYPE ELECTROLYTIC CAPACITOR	CE04W50V-10M(UTSP)	1	397581007AT	
C4316	CHIP TYPE CERAMIC CAPACITOR	CK725B1H-102K1	1	332101025R1	NSP
C4321	UTSP TYPE ELECTROLYTIC CAPACITOR	CE04W25V-47M(UTSP)	1	397554707AT	
C4322	UTSP TYPE ELECTROLYTIC CAPACITOR	CE04W25V-47M(UTSP)	1	397554707AT	
C4323	UTSP TYPE ELECTROLYTIC CAPACITOR	CE04W25V-47M(UTSP)	1	397554707AT	
C4324	UTSP TYPE ELECTROLYTIC CAPACITOR	CE04W25V-47M(UTSP)	1	397554707AT	
C4325	CHIP TYPE CERAMIC CAPACITOR	CK725B1H-332K1	1	332103325R1	NSP
C4326	CHIP TYPE CERAMIC CAPACITOR	CK725B1H-332K1	1	332103325R1	NSP
C4327	CHIP TYPE CERAMIC CAPACITOR	CK725B1H-104K1	1	332101045R1	NSP
C4328	CHIP TYPE CERAMIC CAPACITOR	CK725B1H-104K1	1	332101045R1	NSP
C4329	UTSP TYPE ELECTROLYTIC CAPACITOR	CE04W50V-4.7M(UTSP)	1	397580477AT	
C4330	UTSP TYPE ELECTROLYTIC CAPACITOR	CE04W50V-4.7M(UTSP)	1	397580477AT	
C4331	UTSP TYPE ELECTROLYTIC CAPACITOR	CE04W25V-47M(UTSP)	1	397554707AT	
C4332	UTSP TYPE ELECTROLYTIC CAPACITOR	CE04W25V-47M(UTSP)	1	397554707AT	
C4333	CHIP TYPE CERAMIC CAPACITOR	CC725CH1H-221J1	1	342102214R1	NSP
C4334	CHIP TYPE CERAMIC CAPACITOR	CC725CH1H-221J1	1	342102214R1	NSP
C4335	UTSP TYPE ELECTROLYTIC CAPACITOR	CE04W50V-10M(UTSP)	1	397581007AT	
C4336	CHIP TYPE CERAMIC CAPACITOR	CK725B1H-102K1	1	332101025R1	NSP
C4531	ELECTROLYTIC CAPACITOR	CE04W16V-47M(S)	1	353744709T	
C4532	ELECTROLYTIC CAPACITOR	CE04W16V-47M(S)	1	353744709T	
C4533	CHIP TYPE CERAMIC CAPACITOR	CC725CH1H-102J1	1	342101024R1	NSP
C4534	CHIP TYPE CERAMIC CAPACITOR	CC725CH1H-102J1	1	342101024R1	NSP
C4535	UMXR TYPE PLASTIC FILM CAPACITOR	1JUMXRTF123JE	1	376591234T	NSP
C4536	UMXR TYPE PLASTIC FILM CAPACITOR	1JUMXRTF123JE	1	376591234T	NSP
C4537	UMXR TYPE PLASTIC FILM CAPACITOR	1JUMXRTF332JE	1	376593324T	NSP
C4538	UMXR TYPE PLASTIC FILM CAPACITOR	1JUMXRTF332JE	1	376593324T	NSP
C4543	CHIP TYPE CERAMIC CAPACITOR	CK725B1H-472K1	1	332104725R1	NSP
C4544	CHIP TYPE CERAMIC CAPACITOR	CK725B1H-472K1	1	332104725R1	NSP
C4545	UTSP TYPE ELECTROLYTIC CAPACITOR	CE04W50V-10M(UTSP)	1	397581007AT	
C4546	UTSP TYPE ELECTROLYTIC CAPACITOR	CE04W50V-10M(UTSP)	1	397581007AT	
C4547	JAMICON TYPE ELECTROLYTIC CAPACITC	CE04W16V-220M	1	398542217T	
C4548	JAMICON TYPE ELECTROLYTIC CAPACITC	CE04W16V-220M	1	398542217T	
C4549	CHIP TYPE CERAMIC CAPACITOR	CK725B1H-104K1	1	332101045R1	NSP
C4550	CHIP TYPE CERAMIC CAPACITOR	CK725B1H-104K1	1	332101045R1	NSP
C4551	UTSP TYPE ELECTROLYTIC CAPACITOR	CE04W10V-220M(UTSP)	1	397532217AT	
C4552	UTSP TYPE ELECTROLYTIC CAPACITOR	CE04W10V-220M(UTSP)	1	397532217AT	
C5005	UPZ TYPE PLASTIC FILM CAPACITOR	2AUPZTF221JE	1	376332214T	NSP
C5006	UPZ TYPE PLASTIC FILM CAPACITOR	2AUPZTF221JE	1	376332214T	NSP
C5007	UPZ TYPE PLASTIC FILM CAPACITOR	2AUPZTF221JE	1	376332214T	NSP
C5008	UPZ TYPE PLASTIC FILM CAPACITOR	2AUPZTF221JE	1	376332214T	NSP
C5025	UTSP TYPE ELECTROLYTIC CAPACITOR	CE04W50V 47M(UTSP)	1	397584707AT	
C5026	UTSP TYPE ELECTROLYTIC CAPACITOR	CE04W50V 47M(UTSP)	1	397584707AT	

C5027	UTSP TYPE ELECTROLYTIC CAPACITOR	CE04W50V 47M(UTSP)	1	397584707AT	
C5028	UTSP TYPE ELECTROLYTIC CAPACITOR	CE04W50V 47M(UTSP)	1	397584707AT	
C5085	UTSP TYPE ELECTROLYTIC CAPACITOR	CE04W50V-10M(UTSP)	1	397581007AT	
C5086	UTSP TYPE ELECTROLYTIC CAPACITOR	CE04W50V-10M(UTSP)	1	397581007AT	
C5087	UTSP TYPE ELECTROLYTIC CAPACITOR	CE04W50V-10M(UTSP)	1	397581007AT	
C5088	UTSP TYPE ELECTROLYTIC CAPACITOR	CE04W50V-10M(UTSP)	1	397581007AT	
C5485	UPZ TYPE PLASTIC FILM CAPACITOR	2AUPZTF101JE	1	376331014T	NSP
C5486	UPZ TYPE PLASTIC FILM CAPACITOR	2AUPZTF101JE	1	376331014T	NSP
C5487	UPZ TYPE PLASTIC FILM CAPACITOR	2AUPZTF101JE	1	376331014T	NSP
C5488	UPZ TYPE PLASTIC FILM CAPACITOR	2AUPZTF101JE	1	376331014T	NSP
C5505	VR TYPE ELECTROLYTIC CAPACITOR	CE04W100V-22M(VR)	1	394692207T	
C5506	VR TYPE ELECTROLYTIC CAPACITOR	CE04W100V-22M(VR)	1	394692207T	
C5507	VR TYPE ELECTROLYTIC CAPACITOR	CE04W100V-22M(VR)	1	394692207T	
C5508	VR TYPE ELECTROLYTIC CAPACITOR	CE04W100V-22M(VR)	1	394692207T	
C5525	VR TYPE ELECTROLYTIC CAPACITOR	CE04W100V-22M(VR)	1	394692207T	
C5526	VR TYPE ELECTROLYTIC CAPACITOR	CE04W100V-22M(VR)	1	394692207T	
C5527	VR TYPE ELECTROLYTIC CAPACITOR	CE04W100V-22M(VR)	1	394692207T	
C5528	VR TYPE ELECTROLYTIC CAPACITOR	CE04W100V-22M(VR)	1	394692207T	
C5625	CHIP TYPE CERAMIC CAPACITOR	CK725B1H-103K1	1	332101035R1	NSP
C5626	CHIP TYPE CERAMIC CAPACITOR	CK725B1H-103K1	1	332101035R1	NSP
C5627	CHIP TYPE CERAMIC CAPACITOR	CK725B1H-103K1	1	332101035R1	NSP
C5628	CHIP TYPE CERAMIC CAPACITOR	CK725B1H-103K1	1	332101035R1	NSP
C5645	UTSP TYPE ELECTROLYTIC CAPACITOR	CE04W50V 47M(UTSP)	1	397584707AT	
C5646	UTSP TYPE ELECTROLYTIC CAPACITOR	CE04W50V 47M(UTSP)	1	397584707AT	
C5647	UTSP TYPE ELECTROLYTIC CAPACITOR	CE04W50V 47M(UTSP)	1	397584707AT	
C5648	UTSP TYPE ELECTROLYTIC CAPACITOR	CE04W50V 47M(UTSP)	1	397584707AT	
C6305	UTSP TYPE ELECTROLYTIC CAPACITOR	CE04W50V 47M(UTSP)	1	397584707AT	
C6306	UTSP TYPE ELECTROLYTIC CAPACITOR	CE04W50V 47M(UTSP)	1	397584707AT	
C6307	UTSP TYPE ELECTROLYTIC CAPACITOR	CE04W50V 47M(UTSP)	1	397584707AT	
C6308	UTSP TYPE ELECTROLYTIC CAPACITOR	CE04W50V 47M(UTSP)	1	397584707AT	
C6405	CERAMIC CAPACITOR	CC45SL50V-040C	1	345020401T	NSP
C6406	CERAMIC CAPACITOR	CC45SL50V-040C	1	345020401T	NSP
C6407	CERAMIC CAPACITOR	CC45SL50V-040C	1	345020401T	NSP
C6408	CERAMIC CAPACITOR	CC45SL50V-040C	1	345020401T	NSP
C6425	UTSP TYPE ELECTROLYTIC CAPACITOR	CE04W25V-220M(UTSP)	1	397552217T	
C6426	UTSP TYPE ELECTROLYTIC CAPACITOR	CE04W25V-220M(UTSP)	1	397552217T	
C6427	UTSP TYPE ELECTROLYTIC CAPACITOR	CE04W25V-220M(UTSP)	1	397552217T	
C6428	UTSP TYPE ELECTROLYTIC CAPACITOR	CE04W25V-220M(UTSP)	1	397552217T	
C6461	UMXR TYPE PLASTIC FILM CAPACITOR	1JUMXRTF473JE	1	376594734T	NSP
C6462	UMXR TYPE PLASTIC FILM CAPACITOR	1JUMXRTF473JE	1	376594734T	NSP
C6463	UMXR TYPE PLASTIC FILM CAPACITOR	1JUMXRTF473JE	1	376594734T	NSP
C6465	UMXR TYPE PLASTIC FILM CAPACITOR	1JUMXRTF473JE	1	376594734T	NSP
C6466	UMXR TYPE PLASTIC FILM CAPACITOR	1JUMXRTF473JE	1	376594734T	NSP
C6467	UMXR TYPE PLASTIC FILM CAPACITOR	1JUMXRTF473JE	1	376594734T	NSP
C6468	UMXR TYPE PLASTIC FILM CAPACITOR	1JUMXRTF473JE	1	376594734T	NSP
C6601	FILM C	C281H224J20A21A	1	376822244T	NSP
C6602	FILM C	C281H224J20A21A	1	376822244T	NSP
C6603	FILM C	C281H224J20A21A	1	376822244T	NSP
C6605	FILM C	C281H224J20A21A	1	376822244T	NSP
C6606	FILM C	C281H224J20A21A	1	376822244T	NSP
C6607	FILM C	C281H224J20A21A	1	376822244T	NSP
C6608	FILM C	C281H224J20A21A	1	376822244T	NSP
C6700	UMXR TYPE PLASTIC FILM CAPACITOR	1JUMXRTF103JE	1	376591034T	NSP
C6703	CHIP TYPE CERAMIC CAPACITOR	CC725CH1H-101J1	1	342101014R1	NSP
C6704	CHIP TYPE CERAMIC CAPACITOR	CK725F1A-105Z1	1	332181050R1	NSP

C6705	CHIP TYPE CERAMIC CAPACITOR	CK725B1H-222K1	1	332102225R1	NSP
C6741	JAMICON TYPE ELECTROLYTIC CAPACITC	CE04W25V-220M	1	398552217T	
C6741or	UTSP TYPE ELECTROLYTIC CAPACITOR	CE04W25V-220M(UTSP)	(1)	397552217T	
C6742	CHIP TYPE CERAMIC CAPACITOR	CK725F1E-104Z1	1	332161040R1	NSP
C6744	JAMICON TYPE ELECTROLYTIC CAPACITC	CE04W50V-1M	1	398580107T	
C6744or	UTSP TYPE ELECTROLYTIC CAPACITOR	CE04W50V-1M(UTSP)	(1)	397580107AT	
C6780	JAMICON TYPE ELECTROLYTIC CAPACITC	CE04W50V-10M	1	398581007T	
C6780or	UTSP TYPE ELECTROLYTIC CAPACITOR	CE04W50V-10M(UTSP)	(1)	397581007AT	
C6800	CHIP TYPE CERAMIC CAPACITOR	CK725F1E-104Z1	1	332161040R1	NSP
C6801	CHIP TYPE CERAMIC CAPACITOR	CK725F1E-104Z1	1	332161040R1	NSP
C6901	ELECTROLYTIC CAPACITOR	CE69W75V-15000MMN	1	3504535	
C6902	ELECTROLYTIC CAPACITOR	CE69W75V-15000MMN	1	3504535	
C6903	FILM C	C282A334J20A21A	1	376833344T	NSP
C6904	FILM C	C282A334J20A21A	1	376833344T	NSP
C6911	CHIP TYPE CERAMIC CAPACITOR	CK725B1H-104K1	1	332101045R1	NSP
[Resistors]					
R4001	CHIP TYPE CARBON RESISTOR	RN72K1J-331JE	1	435033314R1	NSP
R4002	CHIP TYPE CARBON RESISTOR	RN72K1J-331JE	1	435033314R1	NSP
R4003	CHIP TYPE CARBON RESISTOR	RN72K1J-104JE	1	435031044R1	NSP
R4004	CHIP TYPE CARBON RESISTOR	RN72K1J-104JE	1	435031044R1	NSP
R4005	CHIP TYPE CARBON RESISTOR	RN72K1J-331JE	1	435033314R1	NSP
R4006	CHIP TYPE CARBON RESISTOR	RN72K1J-331JE	1	435033314R1	NSP
R4007	CHIP TYPE CARBON RESISTOR	RN72K1J-104JE	1	435031044R1	NSP
R4008	CHIP TYPE CARBON RESISTOR	RN72K1J-104JE	1	435031044R1	NSP
R4009	CHIP TYPE CARBON RESISTOR	RN72K1J-331JE	1	435033314R1	NSP
R4010	CHIP TYPE CARBON RESISTOR	RN72K1J-331JE	1	435033314R1	NSP
R4011	CHIP TYPE CARBON RESISTOR	RN72K1J-104JE	1	435031044R1	NSP
R4012	CHIP TYPE CARBON RESISTOR	RN72K1J-104JE	1	435031044R1	NSP
R4013	CHIP TYPE CARBON RESISTOR	RN72K1J-331JE	1	435033314R1	NSP
R4014	CHIP TYPE CARBON RESISTOR	RN72K1J-331JE	1	435033314R1	NSP
R4015	CHIP TYPE CARBON RESISTOR	RN72K1J-104JE	1	435031044R1	NSP
R4016	CHIP TYPE CARBON RESISTOR	RN72K1J-104JE	1	435031044R1	NSP
R4017	CHIP TYPE CARBON RESISTOR	RN72K1J-331JE	1	435033314R1	NSP
R4018	CHIP TYPE CARBON RESISTOR	RN72K1J-331JE	1	435033314R1	NSP
R4019	CHIP TYPE CARBON RESISTOR	RN72K1J-104JE	1	435031044R1	NSP
R4020	CHIP TYPE CARBON RESISTOR	RN72K1J-104JE	1	435031044R1	NSP
R4021	CHIP TYPE CARBON RESISTOR	RN72K1J-331JE	1	435033314R1	NSP
R4022	CHIP TYPE CARBON RESISTOR	RN72K1J-331JE	1	435033314R1	NSP
R4023	CHIP TYPE CARBON RESISTOR	RN72K1J-104JE	1	435031044R1	NSP
R4024	CHIP TYPE CARBON RESISTOR	RN72K1J-104JE	1	435031044R1	NSP
R4029	CHIP TYPE CARBON RESISTOR	RN72K1J-331JE	1	435033314R1	NSP
R4030	CHIP TYPE CARBON RESISTOR	RN72K1J-331JE	1	435033314R1	NSP
R4031	CHIP TYPE CARBON RESISTOR	RN72K1J-563JE	1	435035634R1	NSP
R4032	CHIP TYPE CARBON RESISTOR	RN72K1J-563JE	1	435035634R1	NSP
R4041	CHIP TYPE CARBON RESISTOR	RN72K1J-224JE	1	435032244R1	NSP
R4042	CHIP TYPE CARBON RESISTOR	RN72K1J-224JE	1	435032244R1	NSP
R4043	CHIP TYPE CARBON RESISTOR	RN72K1J-224JE	1	435032244R1	NSP
R4044	CHIP TYPE CARBON RESISTOR	RN72K1J-224JE	1	435032244R1	NSP
R4045	CHIP TYPE CARBON RESISTOR	RN72K1J-224JE	1	435032244R1	NSP
R4046	CHIP TYPE CARBON RESISTOR	RN72K1J-224JE	1	435032244R1	NSP
R4047	CHIP TYPE CARBON RESISTOR	RN72K1J-224JE	1	435032244R1	NSP
R4048	CHIP TYPE CARBON RESISTOR	RN72K1J-224JE	1	435032244R1	NSP
R4049	CHIP TYPE CARBON RESISTOR	RN72K1J-224JE	1	435032244R1	NSP
R4050	CHIP TYPE CARBON RESISTOR	RN72K1J-224JE	1	435032244R1	NSP
R4053	CHIP TYPE CARBON RESISTOR	RN72K1J-102JE	1	435031024R1	NSP

R4054	CHIP TYPE CARBON RESISTOR	RN72K1J-102JE	1	435031024R1	NSP
R4055	CHIP TYPE CARBON RESISTOR	RN72K1J-224JE	1	435032244R1	NSP
R4056	CHIP TYPE CARBON RESISTOR	RN72K1J-224JE	1	435032244R1	NSP
R4057	CHIP TYPE CARBON RESISTOR	RN72K1J-104JE	1	435031044R1	NSP
R4061	CHIP TYPE CARBON RESISTOR	RN72K1J-223JE	1	435032234R1	NSP
R4062	CHIP TYPE CARBON RESISTOR	RN72K1J-223JE	1	435032234R1	NSP
R4063	CHIP TYPE CARBON RESISTOR	RN72K1J-331JE	1	435033314R1	NSP
R4064	CHIP TYPE CARBON RESISTOR	RN72K1J-331JE	1	435033314R1	NSP
R4065	CHIP TYPE CARBON RESISTOR	RN72K1J-332JE	1	435033324R1	NSP
R4066	CHIP TYPE CARBON RESISTOR	RN72K1J-332JE	1	435033324R1	NSP
R4067	CHIP TYPE CARBON RESISTOR	RN72K1J-123JE	1	435031234R1	NSP
R4068	CHIP TYPE CARBON RESISTOR	RN72K1J-123JE	1	435031234R1	NSP
R4069	CHIP TYPE CARBON RESISTOR	RN72K1J-103JE	1	435031034R1	NSP
R4070	CHIP TYPE CARBON RESISTOR	RN72K1J-103JE	1	435031034R1	NSP
R4071	CHIP TYPE CARBON RESISTOR	RN72K1J-224JE	1	435032244R1	NSP
R4072	CHIP TYPE CARBON RESISTOR	RN72K1J-224JE	1	435032244R1	NSP
R4081	CHIP TYPE CARBON RESISTOR	RN72K1J-103JE	1	435031034R1	NSP
R4082	CHIP TYPE CARBON RESISTOR	RN72K1J-103JE	1	435031034R1	NSP
R4085	CHIP TYPE CARBON RESISTOR	RN72K1J-000JE	1	435030004R1	NSP
R4086	CHIP TYPE CARBON RESISTOR	RN72K1J-000JE	1	435030004R1	NSP
R4094	CHIP TYPE CARBON RESISTOR	RN72K1J-102JE	1	435031024R1	NSP
R4095	CHIP TYPE CARBON RESISTOR	RN72K1J-102JE	1	435031024R1	NSP
R4097	CHIP TYPE CARBON RESISTOR	RN72K1J-102JE	1	435031024R1	NSP
R4098	CHIP TYPE CARBON RESISTOR	RN72K1J-102JE	1	435031024R1	NSP
R4101	CHIP TYPE CARBON RESISTOR	RN72K1J-224JE	1	435032244R1	NSP
R4102	CHIP TYPE CARBON RESISTOR	RN72K1J-224JE	1	435032244R1	NSP
R4103	CHIP TYPE CARBON RESISTOR	RN72K1J-224JE	1	435032244R1	NSP
R4104	CHIP TYPE CARBON RESISTOR	RN72K1J-223JE	1	435032234R1	NSP
R4105	CHIP TYPE CARBON RESISTOR	RN72K1J-224JE	1	435032244R1	NSP
R4106	CHIP TYPE CARBON RESISTOR	RN72K1J-224JE	1	435032244R1	NSP
R4107	CHIP TYPE CARBON RESISTOR	RN72K1J-224JE	1	435032244R1	NSP
R4108	CHIP TYPE CARBON RESISTOR	RN72K1J-224JE	1	435032244R1	NSP
R4111	CHIP TYPE CARBON RESISTOR	RN72K1J-121JE	1	435031214R1	NSP
R4112	CHIP TYPE CARBON RESISTOR	RN72K1J-121JE	1	435031214R1	NSP
R4113	CHIP TYPE CARBON RESISTOR	RN72K1J-121JE	1	435031214R1	NSP
R4114	CHIP TYPE CARBON RESISTOR	RN72K1J-271JE	1	435032714R1	NSP
R4115	CHIP TYPE CARBON RESISTOR	RN72K1J-121JE	1	435031214R1	NSP
R4116	CHIP TYPE CARBON RESISTOR	RN72K1J-121JE	1	435031214R1	NSP
R4117	CHIP TYPE CARBON RESISTOR	RN72K1J-121JE	1	435031214R1	NSP
R4118	CHIP TYPE CARBON RESISTOR	RN72K1J-121JE	1	435031214R1	NSP
R4121	CHIP TYPE CARBON RESISTOR	RN72K1J-101JE	1	435031014R1	NSP
R4122	CHIP TYPE CARBON RESISTOR	RN72K1J-101JE	1	435031014R1	NSP
R4123	CHIP TYPE CARBON RESISTOR	RN72K1J-101JE	1	435031014R1	NSP
R4124	CHIP TYPE CARBON RESISTOR	RN72K1J-101JE	1	435031014R1	NSP
R4125	CHIP TYPE CARBON RESISTOR	RN72K1J-101JE	1	435031014R1	NSP
R4126	CHIP TYPE CARBON RESISTOR	RN72K1J-101JE	1	435031014R1	NSP
R4127	CHIP TYPE CARBON RESISTOR	RN72K1J-101JE	1	435031014R1	NSP
R4128	CHIP TYPE CARBON RESISTOR	RN72K1J-101JE	1	435031014R1	NSP
R4137	CHIP TYPE CARBON RESISTOR	RN72K1J-000JE	1	435030004R1	NSP
R4141	CHIP TYPE CARBON RESISTOR	RN72K1J-000JE	1	435030004R1	NSP
R4142	CHIP TYPE CARBON RESISTOR	RN72K1J-000JE	1	435030004R1	NSP
R4143	CHIP TYPE CARBON RESISTOR	RN72K1J-000JE	1	435030004R1	NSP
R4146	CHIP TYPE CARBON RESISTOR	RN72K1J-000JE	1	435030004R1	NSP
R4147	CHIP TYPE CARBON RESISTOR	RN72K1J-000JE	1	435030004R1	NSP
R4151	CHIP TYPE CARBON RESISTOR	RN72K1J-224JE	1	435032244R1	NSP

R4152	CHIP TYPE CARBON RESISTOR	RN72K1J-224JE	1	435032244R1	NSP
R4153	CHIP TYPE CARBON RESISTOR	RN72K1J-224JE	1	435032244R1	NSP
R4154	CHIP TYPE CARBON RESISTOR	RN72K1J-224JE	1	435032244R1	NSP
R4155	CHIP TYPE CARBON RESISTOR	RN72K1J-224JE	1	435032244R1	NSP
R4156	CHIP TYPE CARBON RESISTOR	RN72K1J-224JE	1	435032244R1	NSP
R4157	CHIP TYPE CARBON RESISTOR	RN72K1J-224JE	1	435032244R1	NSP
R4158	CHIP TYPE CARBON RESISTOR	RN72K1J-224JE	1	435032244R1	NSP
R4161	CHIP TYPE CARBON RESISTOR	RN72K1J-101JE	1	435031014R1	NSP
R4162	CHIP TYPE CARBON RESISTOR	RN72K1J-101JE	1	435031014R1	NSP
R4163	CHIP TYPE CARBON RESISTOR	RN72K1J-101JE	1	435031014R1	NSP
R4164	CHIP TYPE CARBON RESISTOR	RN72K1J-101JE	1	435031014R1	NSP
R4165	CHIP TYPE CARBON RESISTOR	RN72K1J-101JE	1	435031014R1	NSP
R4166	CHIP TYPE CARBON RESISTOR	RN72K1J-101JE	1	435031014R1	NSP
R4167	CHIP TYPE CARBON RESISTOR	RN72K1J-101JE	1	435031014R1	NSP
R4168	CHIP TYPE CARBON RESISTOR	RN72K1J-101JE	1	435031014R1	NSP
R4174	CHIP TYPE CARBON RESISTOR	RN72K1J-101JE	1	435031014R1	NSP
R4175	CHIP TYPE CARBON RESISTOR	RN72K1J-220JE	1	435032204R1	NSP
R4176	CHIP TYPE CARBON RESISTOR	RN72K1J-220JE	1	435032204R1	NSP
R4181	CHIP TYPE CARBON RESISTOR	RN72K1J-102JE	1	435031024R1	NSP
R4182	CHIP TYPE CARBON RESISTOR	RN72K1J-224JE	1	435032244R1	NSP
R4183	CHIP TYPE CARBON RESISTOR	RN72K1J-224JE	1	435032244R1	NSP
R4184	CHIP TYPE CARBON RESISTOR	RN72K1J-224JE	1	435032244R1	NSP
R4185	CHIP TYPE CARBON RESISTOR	RN72K1J-224JE	1	435032244R1	NSP
R4186	CHIP TYPE CARBON RESISTOR	RN72K1J-224JE	1	435032244R1	NSP
R4190	CHIP TYPE CARBON RESISTOR	RN72K1J-221JE	1	435032214R1	NSP
R4191	CHIP TYPE CARBON RESISTOR	RN72K1J-473JE	1	435034734R1	NSP
R4192	CHIP TYPE CARBON RESISTOR	RN72K1J-153JE	1	435031534R1	NSP
R4193	CHIP TYPE CARBON RESISTOR	RN72K1J-122JE	1	435031224R1	NSP
R4194	CHIP TYPE CARBON RESISTOR	RN72K1J-103JE	1	435031034R1	NSP
R4201	CHIP TYPE CARBON RESISTOR	RN72K1J-220JE	1	435032204R1	NSP
R4202	CHIP TYPE CARBON RESISTOR	RN72K1J-220JE	1	435032204R1	NSP
R4223	CHIP TYPE CARBON RESISTOR	RN72K1J-121JE	1	435031214R1	NSP
R4225	CHIP TYPE CARBON RESISTOR	RN72K1J-121JE	1	435031214R1	NSP
R4226	CHIP TYPE CARBON RESISTOR	RN72K1J-121JE	1	435031214R1	NSP
R4233	CHIP TYPE CARBON RESISTOR	RN72K1J-101JE	1	435031014R1	NSP
R4235	CHIP TYPE CARBON RESISTOR	RN72K1J-101JE	1	435031014R1	NSP
R4236	CHIP TYPE CARBON RESISTOR	RN72K1J-101JE	1	435031014R1	NSP
R4251	METAL RESISTOR	RNU1/2WCJ-0.22	1	453532294T	NSP
R4252	METAL RESISTOR	RNU1/2WCJ-0.22	1	453532294T	NSP
R4253	METAL RESISTOR	RNU1/2WCJ-0.22	1	453532294T	NSP
R4254	METAL RESISTOR	RNU1/2WCJ-0.22	1	453532294T	NSP
R4255	METAL RESISTOR	RNU1WCJ-2.2	1	453630224T	NSP
R4256	METAL RESISTOR	RNU1WCJ-2.2	1	453630224T	NSP
R4259	METAL OXIDE FILM RESISTOR	RS1WBJ-33	1	443623304T	NSP
R4260	METAL OXIDE FILM RESISTOR	RS1WBJ-33	1	443623304T	NSP
R4261	METAL OXIDE FILM RESISTOR	RS1WBJ-33	1	443623304T	NSP
R4262	METAL OXIDE FILM RESISTOR	RS1WBJ-33	1	443623304T	NSP
R4263	METAL OXIDE FILM RESISTOR	RS1WBJ-33	1	443623304T	NSP
R4264	METAL OXIDE FILM RESISTOR	RS1WBJ-33	1	443623304T	NSP
R4265	CHIP TYPE CARBON RESISTOR	RN72K1J-152JE	1	435031524R1	NSP
R4266	CHIP TYPE CARBON RESISTOR	RN72K1J-152JE	1	435031524R1	NSP
R4269	CHIP TYPE CARBON RESISTOR	RN72K1J-100JE	1	435031004R1	NSP
R4270	CHIP TYPE CARBON RESISTOR	RN72K1J-100JE	1	435031004R1	NSP
R4301	CHIP TYPE CARBON RESISTOR	RN72K1J-224JE	1	435032244R1	NSP
R4302	CHIP TYPE CARBON RESISTOR	RN72K1J-224JE	1	435032244R1	NSP

R4303	CHIP TYPE CARBON RESISTOR	RN72K1J-472JE	1	435034724R1	NSP
R4304	CHIP TYPE CARBON RESISTOR	RN72K1J-472JE	1	435034724R1	NSP
R4307	CHIP TYPE CARBON RESISTOR	RN72K1J-222JE	1	435032224R1	NSP
R4308	CHIP TYPE CARBON RESISTOR	RN72K1J-222JE	1	435032224R1	NSP
R4309	CHIP TYPE CARBON RESISTOR	RN72K1J-224JE	1	435032244R1	NSP
R4310	CHIP TYPE CARBON RESISTOR	RN72K1J-224JE	1	435032244R1	NSP
R4311	CHIP TYPE CARBON RESISTOR	RN72K1J-101JE	1	435031014R1	NSP
R4312	CHIP TYPE CARBON RESISTOR	RN72K1J-101JE	1	435031014R1	NSP
R4313	CHIP TYPE CARBON RESISTOR	RN72K1J-102JE	1	435031024R1	NSP
R4314	CHIP TYPE CARBON RESISTOR	RN72K1J-102JE	1	435031024R1	NSP
R4315	CHIP TYPE CARBON RESISTOR	RN72K1J-102JE	1	435031024R1	NSP
R4321	CHIP TYPE CARBON RESISTOR	RN72K1J-224JE	1	435032244R1	NSP
R4322	CHIP TYPE CARBON RESISTOR	RN72K1J-224JE	1	435032244R1	NSP
R4323	CHIP TYPE CARBON RESISTOR	RN72K1J-472JE	1	435034724R1	NSP
R4324	CHIP TYPE CARBON RESISTOR	RN72K1J-472JE	1	435034724R1	NSP
R4327	CHIP TYPE CARBON RESISTOR	RN72K1J-222JE	1	435032224R1	NSP
R4328	CHIP TYPE CARBON RESISTOR	RN72K1J-222JE	1	435032224R1	NSP
R4329	CHIP TYPE CARBON RESISTOR	RN72K1J-224JE	1	435032244R1	NSP
R4330	CHIP TYPE CARBON RESISTOR	RN72K1J-224JE	1	435032244R1	NSP
R4331	CHIP TYPE CARBON RESISTOR	RN72K1J-101JE	1	435031014R1	NSP
R4332	CHIP TYPE CARBON RESISTOR	RN72K1J-101JE	1	435031014R1	NSP
R4333	CHIP TYPE CARBON RESISTOR	RN72K1J-102JE	1	435031024R1	NSP
R4334	CHIP TYPE CARBON RESISTOR	RN72K1J-102JE	1	435031024R1	NSP
R4335	CHIP TYPE CARBON RESISTOR	RN72K1J-102JE	1	435031024R1	NSP
R4336	CHIP TYPE CARBON RESISTOR	RN72K1J-472JE	1	435034724R1	NSP
R4339	CHIP TYPE CARBON RESISTOR	RN72K1J-224JE	1	435032244R1	NSP
R4340	CHIP TYPE CARBON RESISTOR	RN72K1J-224JE	1	435032244R1	NSP
R4413	CHIP TYPE CARBON RESISTOR	RN72K1J-000JE	1	435030004R1	NSP
R4414	CHIP TYPE CARBON RESISTOR	RN72K1J-000JE	1	435030004R1	NSP
R4421	CHIP TYPE CARBON RESISTOR	RN72K1J-000JE	1	435030004R1	NSP
R4424	CHIP TYPE CARBON RESISTOR	RN72K1J-000JE	1	435030004R1	NSP
R4531	CHIP TYPE CARBON RESISTOR	RN72K1J-224JE	1	435032244R1	NSP
R4532	CHIP TYPE CARBON RESISTOR	RN72K1J-224JE	1	435032244R1	NSP
R4533	CHIP TYPE CARBON RESISTOR	RN72K1J-561JE	1	435035614R1	NSP
R4534	CHIP TYPE CARBON RESISTOR	RN72K1J-561JE	1	435035614R1	NSP
R4535	CHIP TYPE CARBON RESISTOR	RN72K1J-274JE	1	435032744R1	NSP
R4536	CHIP TYPE CARBON RESISTOR	RN72K1J-274JE	1	435032744R1	NSP
R4537	CHIP TYPE CARBON RESISTOR	RN72K1J-223JE	1	435032234R1	NSP
R4538	CHIP TYPE CARBON RESISTOR	RN72K1J-223JE	1	435032234R1	NSP
R4541	CHIP TYPE CARBON RESISTOR	RN72K1J-331JE	1	435033314R1	NSP
R4542	CHIP TYPE CARBON RESISTOR	RN72K1J-331JE	1	435033314R1	NSP
R4543	CHIP TYPE CARBON RESISTOR	RN72K1J-224JE	1	435032244R1	NSP
R4544	CHIP TYPE CARBON RESISTOR	RN72K1J-224JE	1	435032244R1	NSP
R4546	CHIP TYPE CARBON RESISTOR	RN72K1J-220JE	1	435032204R1	NSP
R4547	CHIP TYPE CARBON RESISTOR	RN72K1J-220JE	1	435032204R1	NSP
R5005	CHIP TYPE CARBON RESISTOR	RN72K1J-332JE	1	435033324R1	NSP
R5006	CHIP TYPE CARBON RESISTOR	RN72K1J-332JE	1	435033324R1	NSP
R5007	CHIP TYPE CARBON RESISTOR	RN72K1J-332JE	1	435033324R1	NSP
R5008	CHIP TYPE CARBON RESISTOR	RN72K1J-332JE	1	435033324R1	NSP
R5025	CHIP TYPE CARBON RESISTOR	RN72K1J-563JE	1	435035634R1	NSP
R5026	CHIP TYPE CARBON RESISTOR	RN72K1J-563JE	1	435035634R1	NSP
R5027	CHIP TYPE CARBON RESISTOR	RN72K1J-563JE	1	435035634R1	NSP
R5028	CHIP TYPE CARBON RESISTOR	RN72K1J-563JE	1	435035634R1	NSP
R5045	CHIP TYPE CARBON RESISTOR	RN72K1J-331JE	1	435033314R1	NSP
R5046	CHIP TYPE CARBON RESISTOR	RN72K1J-331JE	1	435033314R1	NSP

R5047	CHIP TYPE CARBON RESISTOR	RN72K1J-331JE	1	435033314R1	NSP
R5048	CHIP TYPE CARBON RESISTOR	RN72K1J-331JE	1	435033314R1	NSP
R5065	METAL OXIDE FILM RESISTOR	RS1/2WBJ-100K	1	443521044T	NSP
R5066	METAL OXIDE FILM RESISTOR	RS1/2WBJ-100K	1	443521044T	NSP
R5067	METAL OXIDE FILM RESISTOR	RS1/2WBJ-100K	1	443521044T	NSP
R5068	METAL OXIDE FILM RESISTOR	RS1/2WBJ-100K	1	443521044T	NSP
R5085	CHIP TYPE CARBON RESISTOR	RN72K1J-104JE	1	435031044R1	NSP
R5086	CHIP TYPE CARBON RESISTOR	RN72K1J-104JE	1	435031044R1	NSP
R5087	CHIP TYPE CARBON RESISTOR	RN72K1J-104JE	1	435031044R1	NSP
R5088	CHIP TYPE CARBON RESISTOR	RN72K1J-104JE	1	435031044R1	NSP
R5105	CHIP TYPE CARBON RESISTOR	RN72K1J-152JE	1	435031524R1	NSP
R5106	CHIP TYPE CARBON RESISTOR	RN72K1J-152JE	1	435031524R1	NSP
R5107	CHIP TYPE CARBON RESISTOR	RN72K1J-152JE	1	435031524R1	NSP
R5108	CHIP TYPE CARBON RESISTOR	RN72K1J-152JE	1	435031524R1	NSP
R5185	CHIP TYPE CARBON RESISTOR	RN72K1J-330JE	1	435033304R1	NSP
R5186	CHIP TYPE CARBON RESISTOR	RN72K1J-330JE	1	435033304R1	NSP
R5187	CHIP TYPE CARBON RESISTOR	RN72K1J-330JE	1	435033304R1	NSP
R5188	CHIP TYPE CARBON RESISTOR	RN72K1J-330JE	1	435033304R1	NSP
R5205	CHIP TYPE CARBON RESISTOR	RN72K1J-330JE	1	435033304R1	NSP
R5206	CHIP TYPE CARBON RESISTOR	RN72K1J-330JE	1	435033304R1	NSP
R5207	CHIP TYPE CARBON RESISTOR	RN72K1J-330JE	1	435033304R1	NSP
R5208	CHIP TYPE CARBON RESISTOR	RN72K1J-330JE	1	435033304R1	NSP
R5225	CHIP TYPE CARBON RESISTOR	RN72K1J-562JE	1	435035624R1	NSP
R5226	CHIP TYPE CARBON RESISTOR	RN72K1J-562JE	1	435035624R1	NSP
R5227	CHIP TYPE CARBON RESISTOR	RN72K1J-562JE	1	435035624R1	NSP
R5228	CHIP TYPE CARBON RESISTOR	RN72K1J-562JE	1	435035624R1	NSP
R5245	CHIP TYPE CARBON RESISTOR	RN72K1J-182JE	1	435031824R1	NSP
R5246	CHIP TYPE CARBON RESISTOR	RN72K1J-182JE	1	435031824R1	NSP
R5247	CHIP TYPE CARBON RESISTOR	RN72K1J-182JE	1	435031824R1	NSP
R5248	CHIP TYPE CARBON RESISTOR	RN72K1J-182JE	1	435031824R1	NSP
R5305	CHIP TYPE CARBON RESISTOR	RN72K1J-152JE	1	435031524R1	NSP
R5306	CHIP TYPE CARBON RESISTOR	RN72K1J-152JE	1	435031524R1	NSP
R5307	CHIP TYPE CARBON RESISTOR	RN72K1J-152JE	1	435031524R1	NSP
R5308	CHIP TYPE CARBON RESISTOR	RN72K1J-152JE	1	435031524R1	NSP
R5325	CHIP TYPE CARBON RESISTOR	RN72K1J-152JE	1	435031524R1	NSP
R5326	CHIP TYPE CARBON RESISTOR	RN72K1J-152JE	1	435031524R1	NSP
R5327	CHIP TYPE CARBON RESISTOR	RN72K1J-152JE	1	435031524R1	NSP
R5328	CHIP TYPE CARBON RESISTOR	RN72K1J-152JE	1	435031524R1	NSP
R5385	NON-FLAMMABLE CARBON FILM RESISTO	R25J-220	1	415472214T	
R5386	NON-FLAMMABLE CARBON FILM RESISTO	R25J-220	1	415472214T	
R5387	NON-FLAMMABLE CARBON FILM RESISTO	R25J-220	1	415472214T	
R5388	NON-FLAMMABLE CARBON FILM RESISTO	R25J-220	1	415472214T	
R5405	NON-FLAMMABLE CARBON FILM RESISTO	R25J-220	1	415472214T	
R5406	NON-FLAMMABLE CARBON FILM RESISTO	R25J-220	1	415472214T	
R5407	NON-FLAMMABLE CARBON FILM RESISTO	R25J-220	1	415472214T	
R5408	NON-FLAMMABLE CARBON FILM RESISTO	R25J-220	1	415472214T	
R5465	NON-FLAMMABLE CARBON FILM RESISTO	R25J-39K	1	415473934T	
R5466	NON-FLAMMABLE CARBON FILM RESISTO	R25J-39K	1	415473934T	
R5467	NON-FLAMMABLE CARBON FILM RESISTO	R25J-39K	1	415473934T	
R5468	NON-FLAMMABLE CARBON FILM RESISTO	R25J-39K	1	415473934T	
R5485	NON-FLAMMABLE CARBON FILM RESISTO	R25J-39K	1	415473934T	
R5486	NON-FLAMMABLE CARBON FILM RESISTO	R25J-39K	1	415473934T	
R5487	NON-FLAMMABLE CARBON FILM RESISTO	R25J-39K	1	415473934T	
R5488	NON-FLAMMABLE CARBON FILM RESISTO	R25J-39K	1	415473934T	
R5505	NON-FLAMMABLE CARBON FILM RESISTO	R25J-10	1	415471004T	

R5506	NON-FLAMMABLE CARBON FILM RESISTO	R25J-10	1	415471004T	
R5507	NON-FLAMMABLE CARBON FILM RESISTO	R25J-10	1	415471004T	
R5508	NON-FLAMMABLE CARBON FILM RESISTO	R25J-10	1	415471004T	
R5525	NON-FLAMMABLE CARBON FILM RESISTO	R25J-10	1	415471004T	
R5526	NON-FLAMMABLE CARBON FILM RESISTO	R25J-10	1	415471004T	
R5527	NON-FLAMMABLE CARBON FILM RESISTO	R25J-10	1	415471004T	
R5528	NON-FLAMMABLE CARBON FILM RESISTO	R25J-10	1	415471004T	
R5601	CHIP TYPE CARBON RESISTOR	RN72K1J-472FE	1	435034722R1	NSP
R5602	CHIP TYPE CARBON RESISTOR	RN72K1J-472FE	1	435034722R1	NSP
R5603	CHIP TYPE CARBON RESISTOR	RN72K1J-472FE	1	435034722R1	NSP
R5605	CHIP TYPE CARBON RESISTOR	RN72K1J-472FE	1	435034722R1	NSP
R5606	CHIP TYPE CARBON RESISTOR	RN72K1J-472FE	1	435034722R1	NSP
R5607	CHIP TYPE CARBON RESISTOR	RN72K1J-472FE	1	435034722R1	NSP
R5608	CHIP TYPE CARBON RESISTOR	RN72K1J-472FE	1	435034722R1	NSP
R5621	CHIP TYPE CARBON RESISTOR	RN72K1J-104FE	1	435031042R1	NSP
R5622	CHIP TYPE CARBON RESISTOR	RN72K1J-104FE	1	435031042R1	NSP
R5623	CHIP TYPE CARBON RESISTOR	RN72K1J-104FE	1	435031042R1	NSP
R5625	CHIP TYPE CARBON RESISTOR	RN72K1J-104FE	1	435031042R1	NSP
R5626	CHIP TYPE CARBON RESISTOR	RN72K1J-104FE	1	435031042R1	NSP
R5627	CHIP TYPE CARBON RESISTOR	RN72K1J-104FE	1	435031042R1	NSP
R5628	CHIP TYPE CARBON RESISTOR	RN72K1J-104FE	1	435031042R1	NSP
R5641	CHIP TYPE CARBON RESISTOR	RN72K1J-104FE	1	435031042R1	NSP
R5642	CHIP TYPE CARBON RESISTOR	RN72K1J-104FE	1	435031042R1	NSP
R5643	CHIP TYPE CARBON RESISTOR	RN72K1J-104FE	1	435031042R1	NSP
R5645	CHIP TYPE CARBON RESISTOR	RN72K1J-104FE	1	435031042R1	NSP
R5646	CHIP TYPE CARBON RESISTOR	RN72K1J-104FE	1	435031042R1	NSP
R5647	CHIP TYPE CARBON RESISTOR	RN72K1J-104FE	1	435031042R1	NSP
R5648	CHIP TYPE CARBON RESISTOR	RN72K1J-104FE	1	435031042R1	NSP
R5661	CHIP TYPE CARBON RESISTOR	RN72K1J-220FE	1	435032202R1	NSP
R5662	CHIP TYPE CARBON RESISTOR	RN72K1J-220FE	1	435032202R1	NSP
R5663	CHIP TYPE CARBON RESISTOR	RN72K1J-220FE	1	435032202R1	NSP
R5665	CHIP TYPE CARBON RESISTOR	RN72K1J-220FE	1	435032202R1	NSP
R5666	CHIP TYPE CARBON RESISTOR	RN72K1J-220FE	1	435032202R1	NSP
R5667	CHIP TYPE CARBON RESISTOR	RN72K1J-220FE	1	435032202R1	NSP
R5668	CHIP TYPE CARBON RESISTOR	RN72K1J-220FE	1	435032202R1	NSP
R5681	CHIP TYPE CARBON RESISTOR	RN72K1J-000JE	1	435030004R1	NSP
R5685	CHIP TYPE CARBON RESISTOR	RN72K1J-000JE	1	435030004R1	NSP
R5725	CHIP TYPE CARBON RESISTOR	RN72K1J-152FE	1	435031522R1	NSP
R5726	CHIP TYPE CARBON RESISTOR	RN72K1J-152FE	1	435031522R1	NSP
R5727	CHIP TYPE CARBON RESISTOR	RN72K1J-152FE	1	435031522R1	NSP
R5728	CHIP TYPE CARBON RESISTOR	RN72K1J-152FE	1	435031522R1	NSP
R5745	CHIP TYPE CARBON RESISTOR	RN72K1J-152FE	1	435031522R1	NSP
R5746	CHIP TYPE CARBON RESISTOR	RN72K1J-152FE	1	435031522R1	NSP
R5747	CHIP TYPE CARBON RESISTOR	RN72K1J-152FE	1	435031522R1	NSP
R5748	CHIP TYPE CARBON RESISTOR	RN72K1J-152FE	1	435031522R1	NSP
R5785	CHIP TYPE CARBON RESISTOR	RN72K1J-392FE	1	435033922R1	NSP
R5786	CHIP TYPE CARBON RESISTOR	RN72K1J-332FE	1	435033322R1	NSP
R5787	CHIP TYPE CARBON RESISTOR	RN72K1J-332FE	1	435033322R1	NSP
R5788	CHIP TYPE CARBON RESISTOR	RN72K1J-272FE	1	435032722R1	NSP
R5825	NON-FLAMMABLE CARBON FILM RESISTO	R25J-2.2	1	415470224T	
R5826	NON-FLAMMABLE CARBON FILM RESISTO	R25J-2.2	1	415470224T	
R5827	NON-FLAMMABLE CARBON FILM RESISTO	R25J-2.2	1	415470224T	
R5828	NON-FLAMMABLE CARBON FILM RESISTO	R25J-2.2	1	415470224T	
R5862	CHIP TYPE CARBON RESISTOR	RN72K1J-000JE	1	435030004R1	NSP
R5865	CHIP TYPE CARBON RESISTOR	RN72K1J-000JE	1	435030004R1	NSP

R5866	CHIP TYPE CARBON RESISTOR	RN72K1J-000JE	1	435030004R1	NSP
R5867	CHIP TYPE CARBON RESISTOR	RN72K1J-000JE	1	435030004R1	NSP
R5868	CHIP TYPE CARBON RESISTOR	RN72K1J-000JE	1	435030004R1	NSP
R6081	METAL PLATE RESISTOR	MPR5W+5W 0R22	1	4000233	
R6082	METAL PLATE RESISTOR	MPR5W+5W 0R22	1	4000233	
R6083	METAL PLATE RESISTOR	MPR5W+5W 0R22	1	4000233	
R6085	METAL PLATE RESISTOR	MPR5W+5W 0R22	1	4000233	
R6086	METAL PLATE RESISTOR	MPR5W+5W 0R22	1	4000233	
R6087	METAL PLATE RESISTOR	MPR5W+5W 0R22	1	4000233	
R6088	METAL PLATE RESISTOR	MPR5W+5W 0R22	1	4000233	
R6141	NON-FLAMMABLE CARBON FILM RESISTO	R25J-0.22	1	415472294T	
R6142	NON-FLAMMABLE CARBON FILM RESISTO	R25J-0.22	1	415472294T	
R6143	NON-FLAMMABLE CARBON FILM RESISTO	R25J-0.22	1	415472294T	
R6145	NON-FLAMMABLE CARBON FILM RESISTO	R25J-0.22	1	415472294T	
R6146	NON-FLAMMABLE CARBON FILM RESISTO	R25J-0.22	1	415472294T	
R6147	NON-FLAMMABLE CARBON FILM RESISTO	R25J-0.22	1	415472294T	
R6148	NON-FLAMMABLE CARBON FILM RESISTO	R25J-0.22	1	415472294T	
R6161	NON-FLAMMABLE CARBON FILM RESISTO	R25J-0.22	1	415472294T	
R6162	NON-FLAMMABLE CARBON FILM RESISTO	R25J-0.22	1	415472294T	
R6163	NON-FLAMMABLE CARBON FILM RESISTO	R25J-0.22	1	415472294T	
R6165	NON-FLAMMABLE CARBON FILM RESISTO	R25J-0.22	1	415472294T	
R6166	NON-FLAMMABLE CARBON FILM RESISTO	R25J-0.22	1	415472294T	
R6167	NON-FLAMMABLE CARBON FILM RESISTO	R25J-0.22	1	415472294T	
R6168	NON-FLAMMABLE CARBON FILM RESISTO	R25J-0.22	1	415472294T	
R6305	NON-FLAMMABLE CARBON FILM RESISTO	R25J-120	1	415471214T	
R6306	NON-FLAMMABLE CARBON FILM RESISTO	R25J-120	1	415471214T	
R6307	NON-FLAMMABLE CARBON FILM RESISTO	R25J-120	1	415471214T	
R6308	NON-FLAMMABLE CARBON FILM RESISTO	R25J-120	1	415471214T	
R6405	NON-FLAMMABLE CARBON FILM RESISTO	R25J-56K	1	415475634T	
R6406	NON-FLAMMABLE CARBON FILM RESISTO	R25J-56K	1	415475634T	
R6407	NON-FLAMMABLE CARBON FILM RESISTO	R25J-56K	1	415475634T	
R6408	NON-FLAMMABLE CARBON FILM RESISTO	R25J-56K	1	415475634T	
R6425	CHIP TYPE CARBON RESISTOR	RN72K1J-182JE	1	435031824R1	NSP
R6426	CHIP TYPE CARBON RESISTOR	RN72K1J-182JE	1	435031824R1	NSP
R6427	CHIP TYPE CARBON RESISTOR	RN72K1J-182JE	1	435031824R1	NSP
R6428	CHIP TYPE CARBON RESISTOR	RN72K1J-182JE	1	435031824R1	NSP
R6441	CHIP TYPE CARBON RESISTOR	RN72K2E-100JE	1	435221004R1	NSP
R6442	CHIP TYPE CARBON RESISTOR	RN72K2E-100JE	1	435221004R1	NSP
R6443	CHIP TYPE CARBON RESISTOR	RN72K2E-100JE	1	435221004R1	NSP
R6445	CHIP TYPE CARBON RESISTOR	RN72K2E-100JE	1	435221004R1	NSP
R6446	CHIP TYPE CARBON RESISTOR	RN72K2E-100JE	1	435221004R1	NSP
R6447	CHIP TYPE CARBON RESISTOR	RN72K2E-100JE	1	435221004R1	NSP
R6448	CHIP TYPE CARBON RESISTOR	RN72K2E-100JE	1	435221004R1	NSP
R6461	METAL RESISTOR	RNU1WCJ-8.2	1	453630824T	NSP
R6462	METAL RESISTOR	RNU1WCJ-8.2	1	453630824T	NSP
R6463	METAL RESISTOR	RNU1WCJ-8.2	1	453630824T	NSP
R6465	METAL RESISTOR	RNU1WCJ-8.2	1	453630824T	NSP
R6466	METAL RESISTOR	RNU1WCJ-8.2	1	453630824T	NSP
R6467	METAL RESISTOR	RNU1WCJ-8.2	1	453630824T	NSP
R6468	METAL RESISTOR	RNU1WCJ-8.2	1	453630824T	NSP
R6601	CHIP TYPE CARBON RESISTOR	RN72K1J-223JE	1	435032234R1	NSP
R6602	CHIP TYPE CARBON RESISTOR	RN72K1J-223JE	1	435032234R1	NSP
R6603	CHIP TYPE CARBON RESISTOR	RN72K1J-223JE	1	435032234R1	NSP
R6605	CHIP TYPE CARBON RESISTOR	RN72K1J-223JE	1	435032234R1	NSP
R6606	CHIP TYPE CARBON RESISTOR	RN72K1J-223JE	1	435032234R1	NSP

R6607	CHIP TYPE CARBON RESISTOR	RN72K1J-223JE	1	435032234R1	NSP
R6608	CHIP TYPE CARBON RESISTOR	RN72K1J-223JE	1	435032234R1	NSP
R6621	CHIP TYPE CARBON RESISTOR	RN72K1J-223JE	1	435032234R1	NSP
R6622	CHIP TYPE CARBON RESISTOR	RN72K1J-223JE	1	435032234R1	NSP
R6623	CHIP TYPE CARBON RESISTOR	RN72K1J-223JE	1	435032234R1	NSP
R6625	CHIP TYPE CARBON RESISTOR	RN72K1J-223JE	1	435032234R1	NSP
R6626	CHIP TYPE CARBON RESISTOR	RN72K1J-223JE	1	435032234R1	NSP
R6627	CHIP TYPE CARBON RESISTOR	RN72K1J-223JE	1	435032234R1	NSP
R6628	CHIP TYPE CARBON RESISTOR	RN72K1J-223JE	1	435032234R1	NSP
R6641	CHIP TYPE CARBON RESISTOR	RN72K1J-182JE	1	435031824R1	NSP
R6642	CHIP TYPE CARBON RESISTOR	RN72K1J-182JE	1	435031824R1	NSP
R6643	CHIP TYPE CARBON RESISTOR	RN72K1J-182JE	1	435031824R1	NSP
R6645	CHIP TYPE CARBON RESISTOR	RN72K1J-182JE	1	435031824R1	NSP
R6646	CHIP TYPE CARBON RESISTOR	RN72K1J-182JE	1	435031824R1	NSP
R6647	CHIP TYPE CARBON RESISTOR	RN72K1J-182JE	1	435031824R1	NSP
R6648	CHIP TYPE CARBON RESISTOR	RN72K1J-182JE	1	435031824R1	NSP
R6661	CHIP TYPE CARBON RESISTOR	RN72K1J-394JE	1	435033944R1	NSP
R6662	CHIP TYPE CARBON RESISTOR	RN72K1J-394JE	1	435033944R1	NSP
R6663	CHIP TYPE CARBON RESISTOR	RN72K1J-394JE	1	435033944R1	NSP
R6665	CHIP TYPE CARBON RESISTOR	RN72K1J-394JE	1	435033944R1	NSP
R6666	CHIP TYPE CARBON RESISTOR	RN72K1J-394JE	1	435033944R1	NSP
R6667	CHIP TYPE CARBON RESISTOR	RN72K1J-394JE	1	435033944R1	NSP
R6668	CHIP TYPE CARBON RESISTOR	RN72K1J-394JE	1	435033944R1	NSP
R6681	CHIP TYPE CARBON RESISTOR	RN72K1J-333JE	1	435033334R1	NSP
R6682	CHIP TYPE CARBON RESISTOR	RN72K1J-333JE	1	435033334R1	NSP
R6683	CHIP TYPE CARBON RESISTOR	RN72K1J-333JE	1	435033334R1	NSP
R6685	CHIP TYPE CARBON RESISTOR	RN72K1J-333JE	1	435033334R1	NSP
R6686	CHIP TYPE CARBON RESISTOR	RN72K1J-333JE	1	435033334R1	NSP
R6687	CHIP TYPE CARBON RESISTOR	RN72K1J-333JE	1	435033334R1	NSP
R6688	CHIP TYPE CARBON RESISTOR	RN72K1J-333JE	1	435033334R1	NSP
R6700	CHIP TYPE CARBON RESISTOR	RN72K1J-223JE	1	435032234R1	NSP
R6701	CHIP TYPE CARBON RESISTOR	RN72K1J-103JE	1	435031034R1	NSP
R6702	CHIP TYPE CARBON RESISTOR	RN72K1J-333JE	1	435033334R1	NSP
R6703	CHIP TYPE CARBON RESISTOR	RN72K1J-223JE	1	435032234R1	NSP
R6704	CHIP TYPE CARBON RESISTOR	RN72K1J-224JE	1	435032244R1	NSP
R6705	CHIP TYPE CARBON RESISTOR	RN72K1J-222JE	1	435032224R1	NSP
R6706	CHIP TYPE CARBON RESISTOR	RN72K1J-473JE	1	435034734R1	NSP
R6707	CHIP TYPE CARBON RESISTOR	RN72K1J-223JE	1	435032234R1	NSP
R6708	CHIP TYPE CARBON RESISTOR	RN72K1J-333JE	1	435033334R1	NSP
R6721	CHIP TYPE CARBON RESISTOR	RN72K1J-473JE	1	435034734R1	NSP
R6722	CHIP TYPE CARBON RESISTOR	RN72K1J-473JE	1	435034734R1	NSP
R6723	CHIP TYPE CARBON RESISTOR	RN72K1J-473JE	1	435034734R1	NSP
R6725	CHIP TYPE CARBON RESISTOR	RN72K1J-473JE	1	435034734R1	NSP
R6726	CHIP TYPE CARBON RESISTOR	RN72K1J-473JE	1	435034734R1	NSP
R6727	CHIP TYPE CARBON RESISTOR	RN72K1J-473JE	1	435034734R1	NSP
R6728	CHIP TYPE CARBON RESISTOR	RN72K1J-473JE	1	435034734R1	NSP
R6741	CHIP TYPE CARBON RESISTOR	RN72K1J-333JE	1	435033334R1	NSP
R6742	CHIP TYPE CARBON RESISTOR	RN72K1J-103JE	1	435031034R1	NSP
R6743	CHIP TYPE CARBON RESISTOR	RN72K1J-473JE	1	435034734R1	NSP
R6744	CHIP TYPE CARBON RESISTOR	RN72K1J-223JE	1	435032234R1	NSP
R6761	CHIP TYPE CARBON RESISTOR	RN72K1J-473JE	1	435034734R1	NSP
R6762	CHIP TYPE CARBON RESISTOR	RN72K1J-473JE	1	435034734R1	NSP
R6763	CHIP TYPE CARBON RESISTOR	RN72K1J-473JE	1	435034734R1	NSP
R6765	CHIP TYPE CARBON RESISTOR	RN72K1J-473JE	1	435034734R1	NSP
R6766	CHIP TYPE CARBON RESISTOR	RN72K1J-473JE	1	435034734R1	NSP

R6767	CHIP TYPE CARBON RESISTOR	RN72K1J-473JE	1	435034734R1		NSP
R6768	CHIP TYPE CARBON RESISTOR	RN72K1J-473JE	1	435034734R1		NSP
R6780	CHIP TYPE CARBON RESISTOR	RN72K1J-562JE	1	435035624R1		NSP
R6781	CHIP TYPE CARBON RESISTOR	RN72K1J-562JE	1	435035624R1		NSP
R6793	CHIP TYPE CARBON RESISTOR	RN72K1J-000JE	1	435030004R1		NSP
R6795	CHIP TYPE CARBON RESISTOR	RN72K1J-000JE	1	435030004R1		NSP
R6796	CHIP TYPE CARBON RESISTOR	RN72K1J-000JE	1	435030004R1		NSP
R6797	CHIP TYPE CARBON RESISTOR	RN72K1J-000JE	1	435030004R1		NSP
R6802	CHIP TYPE CARBON RESISTOR	RN72K1J-153FE	1	435031532R1		NSP
R6803	CHIP TYPE CARBON RESISTOR	RN72K1J-473FE	1	435034732R1		NSP
R6804	CHIP TYPE CARBON RESISTOR	RN72K1J-184JE	1	435031844R1		NSP
R6805	CHIP TYPE CARBON RESISTOR	RN72K1J-223FE	1	435032232R1		NSP
R6806	THERMISTOR	PRF18BF471QB5RB	1	4000286R2		NSP
R6808	CHIP TYPE CARBON RESISTOR	RN72K1J-224JE	1	435032244R1		NSP
R6901	METAL RESISTOR	RNU1/2WCJ-0.1	1	453531094T	**N**	NSP
R6913	METAL OXIDE FILM RESISTOR	RS1/2WBJ-33	1	443523304T		NSP
[Switches, Terminals, Wires]						
F6901A	FUSE HOLDER	SN5051	1	250113	**!**	NSP
F6901B	FUSE HOLDER	SN5051	1	250113	**!**	NSP
F6902A	FUSE HOLDER	SN5051	1	250113	**!**	NSP
F6902B	FUSE HOLDER	SN5051	1	250113	**!**	NSP
P080	PRINTED WIRING BOARD	BCAF-1979	1	25141979B	**N**	NSP
P080B	PRINTED WIRING BOARD	BCETC-1980	{1}	25141980	**N**	NSP
P080C	PRINTED WIRING BOARD	BCETC-1981	{1}	25141981	**N**	NSP
P1501B	SOCKET	IMSA-9142S-22A	1	25053233		NSP
P1502B	SOCKET	IMSA-9142S-22A	1	25053233		NSP
P170A	PRINTED WIRING BOARD	BCAF-1979	{1}	25141979		NSP
P4001	PIN JACK	NPJ-4PDWWRR624	1	25045845		
P4002	PIN JACK	NPJ-4PDWWRR624	1	25045845		
P4003	PIN JACK	NPJ-4PDWWRR624	1	25045845		
P4004	PIN JACK	NPJ-2PDWR558	1	25045776		
P4005	PIN JACK	NPJ-4PDRWB785	1	25046056		
P4006	PIN JACK	NPJ-2PDWR558	1	25045776		
P4007	PIN JACK	NPJ-1PDB556	1	25045774		
P4008	PIN JACK	NPJ-4PDWWRR624	1	25045845		
P4009	PIN JACK	NPJ-2PDWR558	1	25045776		
P4011	TRM-423(SCREW)	NEJITANSI ST3	1	25060495		NSP
P4301A	WIRE HOL	CHD-1.5-5	1	25053536		NSP
P4301Aor	WIRE HOL	NSCT-5P876	(1)	25051089		NSP
P4301B	WIRE HOL	CHD-1.5-5	1	25053536		NSP
P4301Bor	WIRE HOL	NSCT-5P876	(1)	25051089		NSP
P5506B	RETAINER	(TRM)	1	25060507		NSP
P5509A	RETAINER	(TRM)	1	25060507		NSP
P6001B	PLUG	NPLG-9P0964	1	25056014		NSP
P6002B	PLUG	NPLG-9P0964	1	25056014		NSP
P6003B	PLUG	NPLG-9P0964	1	25056014		NSP
P6011B	RETAINER	(BUS)	1	27142306A		NSP
P6021	PLUG	NPLG-2P29	1	25055038		NSP
P6022	PLUG	NPLG-2P29	1	25055038		NSP
P6023	PLUG	NPLG-2P29	1	25055038		NSP
P6025	PLUG	NPLG-2P29	1	25055038		NSP
P6026	PLUG	NPLG-2P29	1	25055038		NSP
P6027	PLUG	NPLG-2P29	1	25055038		NSP
P6028	PLUG	NPLG-2P29	1	25055038		NSP
P6400	WIRE HARNESS ASSEMBLY	NSAS-7P2206	1	2009991395UL		NSP

P6400A	WIRE HOL	CHD-2.5-7	1	25053542	NSP
P6400Aor	WIRE HOL	NSCT-7P898	(1)	25051111	NSP
P6401	WIRE HARNESS ASSEMBLY	NSAS-9P2223	1	2009991412UL	NSP
P6401A	WIRE HOL	CHD-2.5-9	1	25053543	NSP
P6401Aor	WIRE HOL	NSCT-9P900	(1)	25051113	NSP
P6800	WIRE HARNESS ASSEMBLY	NSAS-5P2110	1	2009991299UL	NSP
P6800A	WIRE HOL	CHD-1.5-5	1	25053536	NSP
P6800Aor	WIRE HOL	NSCT-5P876	(1)	25051089	NSP
P6901	PLUG	NPLG-5P152	1	25055168	NSP
P6902A	CRIMP CORD ASSEMBLY	CRIMP AS	1	2065525080UL	NSP
P6902Aor	CRIMP CORD ASSEMBLY	CLIMP AS	(1)	2069925080UL	NSP
P6903A	CRIMP CORD ASSEMBLY	CRIMP AS	1	2065525242UL	NSP
P6903Aor	CRIMP CORD ASSEMBLY	CRIMP AS	(1)	2069925242UL	NSP
P6904A	CRIMP CORD ASSEMBLY	CRIMP AS	1	2065525166UL	NSP
P6904Aor	CRIMP CORD ASSEMBLY	CRIMP AS	(1)	2069925166UL	NSP
RL4201	RELAY	NRL-2P2A-DC24-212	1	25065741	
RL4201or	RELAY	NRL-2P2A-DC24-208	(1)	25065728	
RL4202	RELAY	NRL-2P2A-DC24-212	1	25065741	
RL4202or	RELAY	NRL-2P2A-DC24-208	(1)	25065728	
RL6911	RELAY	NRL-1P10A-DC12-196	1	25065707	
RL6912	RELAY	NRL-1P10A-DC12-196	1	25065707	

BACLA-2030-2A

<Note>

1. Parts marked by "**NSP**" are generally unavailable because they are not in our Master Spare Parts List.
2. The ! mark found on some component parts indicates the importance of the safety factor of the part.
   Therefore, when replacing, be sure to use parts of identical designation.

: NSP

REF. NO.	PART NAME	DESCRIPTION	Q'TY	PART NO. (SN)	REMARKS
[Semi-conductors]					
D5081	ZENER DIODE	DZ2J056M0L	1	224760560R2	NSP
D5082	ZENER DIODE	DZ2J056M0L	1	224760560R2	NSP
D5083	ZENER DIODE	DZ2J056M0L	1	224760560R2	NSP
D9001	DIODE	S1WB(A)60B-7062	1	22380377R2	NSP
D9002	SPECIFIED DIODE	P6SMB200A-M3/52T	1	225505R2	NSP
D9003	DIODE	GU1M-60A-2	1	22380405R2	NSP
D9003or	DIODE	US1K-E3/61T	(1)	22380376R2	NSP
D9004	DIODE	RF301BM2STL	1	22380388R2	NSP
D9006	DIODE	M1FL20U	1	223276R2	NSP
D9008	DIODE	RBR3MM30ATR	1	22380401R2	NSP
D9011	CHIP TYPE DIODE	DA2J10100	1	223303R2	NSP
D9012	ZENER DIODE	DZ2J360M0L	1	224763600R2	NSP
D9013	SPECIFIED DIODE	P6SMB20A-M3/52	1	225515R2	NSP
D9018	ZENER DIODE	DZ2J200M0L	1	224762000R2	NSP
Q5101	TRANSISTOR	2SC2713-BL	1	2213136R2	
Q5102	TRANSISTOR	2SC2713-BL	1	2213136R2	
Q5103	TRANSISTOR	2SC2713-BL	1	2213136R2	
Q5121	TRANSISTOR	2SC2713-BL	1	2213136R2	
Q5122	TRANSISTOR	2SC2713-BL	1	2213136R2	

Q5123	TRANSISTOR	2SC2713-BL	1	2213136R2	
Q5221	TRANSISTOR	INC5001AP1-T111	1	2218100R2	
Q5221or	TRANSISTOR	2SC2881-Y	(1)	2217564AR2	
Q5222	TRANSISTOR	INC5001AP1-T111	1	2218100R2	
Q5222or	TRANSISTOR	2SC2881-Y	(1)	2217564AR2	
Q5223	TRANSISTOR	INC5001AP1-T111	1	2218100R2	
Q5223or	TRANSISTOR	2SC2881-Y	(1)	2217564AR2	
Q5381	TRANSISTOR	INA6006AP1-T111	1	2217980R2	
Q5381or	TRANSISTOR	2SA1200-Y(2LONK_ZE)	(1)	2217584R2	
Q5382	TRANSISTOR	INA6006AP1-T111	1	2217980R2	
Q5382or	TRANSISTOR	2SA1200-Y(2LONK_ZE)	(1)	2217584R2	
Q5383	TRANSISTOR	INA6006AP1-T111	1	2217980R2	
Q5383or	TRANSISTOR	2SA1200-Y(2LONK_ZE)	(1)	2217584R2	
Q5401	TRANSISTOR	INC6006AP1-T111	1	2217990R2	
Q5401or	TRANSISTOR	2SC2880-Y(2LONK_ZE)	(1)	2217594R2	
Q5402	TRANSISTOR	INC6006AP1-T111	1	2217990R2	
Q5402or	TRANSISTOR	2SC2880-Y(2LONK_ZE)	(1)	2217594R2	
Q5403	TRANSISTOR	INC6006AP1-T111	1	2217990R2	
Q5403or	TRANSISTOR	2SC2880-Y(2LONK_ZE)	(1)	2217594R2	
Q5421	TRANSISTOR	INA6006AP1-T111	1	2217980R2	
Q5421or	TRANSISTOR	2SA1200-Y(2LONK_ZE)	(1)	2217584R2	
Q5422	TRANSISTOR	INA6006AP1-T111	1	2217980R2	
Q5422or	TRANSISTOR	2SA1200-Y(2LONK_ZE)	(1)	2217584R2	
Q5423	TRANSISTOR	INA6006AP1-T111	1	2217980R2	
Q5423or	TRANSISTOR	2SA1200-Y(2LONK_ZE)	(1)	2217584R2	
Q5441	TRANSISTOR	INC6006AP1-T111	1	2217990R2	
Q5441or	TRANSISTOR	2SC2880-Y(2LONK_ZE)	(1)	2217594R2	
Q5442	TRANSISTOR	INC6006AP1-T111	1	2217990R2	
Q5442or	TRANSISTOR	2SC2880-Y(2LONK_ZE)	(1)	2217594R2	
Q5443	TRANSISTOR	INC6006AP1-T111	1	2217990R2	
Q5443or	TRANSISTOR	2SC2880-Y(2LONK_ZE)	(1)	2217594R2	
Q5621	TRANSISTOR	2SC2713-BL	1	2213136R2	
Q5622	TRANSISTOR	2SC2713-BL	1	2213136R2	
Q5623	TRANSISTOR	2SC2713-BL	1	2213136R2	
Q5641	TRANSISTOR	2SA1163-BL	1	2216756R2	
Q5642	TRANSISTOR	2SA1163-BL	1	2216756R2	
Q5643	TRANSISTOR	2SA1163-BL	1	2216756R2	
Q6101	TRANSISTOR	TTC004B_Q(S	1	2218022	
Q6102	TRANSISTOR	TTC004B_Q(S	1	2218022	
Q6103	TRANSISTOR	TTC004B_Q(S	1	2218022	
Q6121	TRANSISTOR	TTA004B_Q(S	1	2218012	
Q6122	TRANSISTOR	TTA004B_Q(S	1	2218012	
Q6123	TRANSISTOR	TTA004B_Q(S	1	2218012	
Q9001	HYBRID IC	STR-A6051M	1	222154	
Q9003	HYBRID IC	EL816MX	1	22242845	
Q9004	HYBRID IC	KIA431A-AT/P	1	22242770T	NSP
Q9005	TRANSISTOR	KRC102S	1	2216190R2	NSP
Q9005or	TRANSISTOR	DTC114ECAT116	(1)	2219010R2	NSP
Q9032	TRANSISTOR	KRC102S	1	2216190R2	NSP
Q9032or	TRANSISTOR	DTC114ECAT116	(1)	2219010R2	NSP
Q9033	TRANSISTOR	KRA102S	1	2216220R2	NSP
Q9033or	TRANSISTOR	DTA114ECAT116	(1)	2218980R2	NSP
[Transformers, Coils]					
L9001	CHOKE COIL	EM-UT2014-0033	1	231474	
L9002	CHOKE COIL	RCR1010NP-100M	1	231449M100	

L9004	CORE	BLM18PG181SN1D	1	2350005R1		NSP
L9005	CORE	BLM18PG181SN1D	1	2350005R1		NSP
T9001	POWER TRANSFORMER	NPT-1632S	1	2302076	!	
T9001or	POWER TRANSFORMER	NPT-1633S	(1)	2302077	!	
[Capacitors]						
C5001	UPZ TYPE PLASTIC FILM CAPACITOR	2AUPZTF221JE	1	376332214T		NSP
C5002	UPZ TYPE PLASTIC FILM CAPACITOR	2AUPZTF221JE	1	376332214T		NSP
C5003	UPZ TYPE PLASTIC FILM CAPACITOR	2AUPZTF221JE	1	376332214T		NSP
C5021	UTSJ C	CE04W50V-47M(UTSJ)	1	398084707BT		
C5022	UTSJ C	CE04W50V-47M(UTSJ)	1	398084707BT		
C5023	UTSJ C	CE04W50V-47M(UTSJ)	1	398084707BT		
C5081	UTSP TYPE ELECTROLYTIC CAPACITOR	CE04W50V-10M(UTSP)	1	397581007AT		
C5082	UTSP TYPE ELECTROLYTIC CAPACITOR	CE04W50V-10M(UTSP)	1	397581007AT		
C5083	UTSP TYPE ELECTROLYTIC CAPACITOR	CE04W50V-10M(UTSP)	1	397581007AT		
C5481	UPZ TYPE PLASTIC FILM CAPACITOR	2AUPZTF101JE	1	376331014T		NSP
C5482	UPZ TYPE PLASTIC FILM CAPACITOR	2AUPZTF101JE	1	376331014T		NSP
C5483	UPZ TYPE PLASTIC FILM CAPACITOR	2AUPZTF101JE	1	376331014T		NSP
C5501	VR TYPE ELECTROLYTIC CAPACITOR	CE04W100V-22M(VR)	1	394692207T		
C5502	VR TYPE ELECTROLYTIC CAPACITOR	CE04W100V-22M(VR)	1	394692207T		
C5503	VR TYPE ELECTROLYTIC CAPACITOR	CE04W100V-22M(VR)	1	394692207T		
C5521	VR TYPE ELECTROLYTIC CAPACITOR	CE04W100V-22M(VR)	1	394692207T		
C5522	VR TYPE ELECTROLYTIC CAPACITOR	CE04W100V-22M(VR)	1	394692207T		
C5523	VR TYPE ELECTROLYTIC CAPACITOR	CE04W100V-22M(VR)	1	394692207T		
C5621	UMXR TYPE PLASTIC FILM CAPACITOR	1JUMXRTF103JE	1	376591034T		NSP
C5622	UMXR TYPE PLASTIC FILM CAPACITOR	1JUMXRTF103JE	1	376591034T		NSP
C5623	UMXR TYPE PLASTIC FILM CAPACITOR	1JUMXRTF103JE	1	376591034T		NSP
C5641	UTSP TYPE ELECTROLYTIC CAPACITOR	CE04W50V 47M(UTSP)	1	397584707AT		
C5642	UTSP TYPE ELECTROLYTIC CAPACITOR	CE04W50V 47M(UTSP)	1	397584707AT		
C5643	UTSP TYPE ELECTROLYTIC CAPACITOR	CE04W50V 47M(UTSP)	1	397584707AT		
C6301	UTSP TYPE ELECTROLYTIC CAPACITOR	CE04W50V 47M(UTSP)	1	397584707AT		
C6302	UTSP TYPE ELECTROLYTIC CAPACITOR	CE04W50V 47M(UTSP)	1	397584707AT		
C6303	UTSP TYPE ELECTROLYTIC CAPACITOR	CE04W50V 47M(UTSP)	1	397584707AT		
C6401	CERAMIC CAPACITOR	CC45SL50V-040C	1	345020401T		NSP
C6402	CERAMIC CAPACITOR	CC45SL50V-040C	1	345020401T		NSP
C6403	CERAMIC CAPACITOR	CC45SL50V-040C	1	345020401T		NSP
C6421	UTSJ C	CE04W25V-220M(UTSJ)	1	398052217AT		
C6422	UTSJ C	CE04W25V-220M(UTSJ)	1	398052217AT		
C6423	UTSJ C	CE04W25V-220M(UTSJ)	1	398052217AT		
C9001	IS TYPE CAPACITOR	LE104-MX-C3.5	1	3800049S	!	
C9002	ELECTROLYTIC CAPACITOR	CE04W200V-100M(KXJ)	1	3500233S		
C9003	PW TYPE ELECTROLYTIC CAPACITOR	CE04W50V-10M(PW)	1	393781007T		
C9004	PW TYPE ELECTROLYTIC CAPACITOR	CE04W25V-1000M(PW)	1	393751027S		
C9006	PW TYPE ELECTROLYTIC CAPACITOR	CE04W25V-470M(PW)	1	393754717T		
C9009	CHIP TYPE CERAMIC CAPACITOR	GRM31A7U3D220JW31D	1	3300071R1		NSP
C9010	IS TYPE CAPACITOR	DE1E3KX102MJ4BN01F	1	3300100S	!	
C9011	CHIP TYPE CERAMIC CAPACITOR	CK725B1C-104K1	1	332121045R1		NSP
C9012	IS TYPE CAPACITOR	LE103-C3.5	1	3800042S	!	
C9012or	IS TYPE CAPACITOR	ECQU2A103MLC	(1)	3800039S	!	
C9013	UTSP TYPE ELECTROLYTIC CAPACITOR	CE04W25V-220M(UTSP)	1	397552217T		
C9014	CHIP TYPE CERAMIC CAPACITOR	CK725B1H-103K1	1	332101035R1		NSP
C9015	CHIP TYPE CERAMIC CAPACITOR	CK725F1E-104Z1	1	332161040R1		NSP
C9016	CHIP TYPE CERAMIC CAPACITOR	CK725B1H-332K1	1	332103325R1		NSP
C9018	IS TYPE CAPACITOR	LE104-MX-C3.5	1	3800049S	!	
C9019	IS TYPE CAPACITOR	DE1E3KX102MJ4BN01F	1	3300100S	!	
C9023	CHIP TYPE CERAMIC CAPACITOR	CK725F1E-104Z1	1	332161040R1		NSP

C9024	CHIP TYPE CERAMIC CAPACITOR	CK725F1E-104Z1	1	332161040R1	NSP
C9025	IS TYPE CAPACITOR	DE1E3KX102MJ4BN01F	1	3300100S	!
[Resistors]					
R5001	CHIP TYPE CARBON RESISTOR	RN72K1J-332JE	1	435033324R1	NSP
R5002	CHIP TYPE CARBON RESISTOR	RN72K1J-332JE	1	435033324R1	NSP
R5003	CHIP TYPE CARBON RESISTOR	RN72K1J-332JE	1	435033324R1	NSP
R5021	CHIP TYPE CARBON RESISTOR	RN72K1J-563JE	1	435035634R1	NSP
R5022	CHIP TYPE CARBON RESISTOR	RN72K1J-563JE	1	435035634R1	NSP
R5023	CHIP TYPE CARBON RESISTOR	RN72K1J-563JE	1	435035634R1	NSP
R5041	CHIP TYPE CARBON RESISTOR	RN72K1J-331JE	1	435033314R1	NSP
R5042	CHIP TYPE CARBON RESISTOR	RN72K1J-331JE	1	435033314R1	NSP
R5043	CHIP TYPE CARBON RESISTOR	RN72K1J-331JE	1	435033314R1	NSP
R5061	METAL OXIDE FILM RESISTOR	RS1/2WBJ-100K	1	443521044T	NSP
R5062	METAL OXIDE FILM RESISTOR	RS1/2WBJ-100K	1	443521044T	NSP
R5063	METAL OXIDE FILM RESISTOR	RS1/2WBJ-100K	1	443521044T	NSP
R5081	CHIP TYPE CARBON RESISTOR	RN72K1J-104JE	1	435031044R1	NSP
R5082	CHIP TYPE CARBON RESISTOR	RN72K1J-104JE	1	435031044R1	NSP
R5083	CHIP TYPE CARBON RESISTOR	RN72K1J-104JE	1	435031044R1	NSP
R5101	CHIP TYPE CARBON RESISTOR	RN72K1J-152JE	1	435031524R1	NSP
R5102	CHIP TYPE CARBON RESISTOR	RN72K1J-152JE	1	435031524R1	NSP
R5103	CHIP TYPE CARBON RESISTOR	RN72K1J-152JE	1	435031524R1	NSP
R5181	CHIP TYPE CARBON RESISTOR	RN72K1J-330JE	1	435033304R1	NSP
R5182	CHIP TYPE CARBON RESISTOR	RN72K1J-330JE	1	435033304R1	NSP
R5183	CHIP TYPE CARBON RESISTOR	RN72K1J-330JE	1	435033304R1	NSP
R5201	CHIP TYPE CARBON RESISTOR	RN72K1J-330JE	1	435033304R1	NSP
R5202	CHIP TYPE CARBON RESISTOR	RN72K1J-330JE	1	435033304R1	NSP
R5203	CHIP TYPE CARBON RESISTOR	RN72K1J-330JE	1	435033304R1	NSP
R5221	CHIP TYPE CARBON RESISTOR	RN72K1J-562JE	1	435035624R1	NSP
R5222	CHIP TYPE CARBON RESISTOR	RN72K1J-562JE	1	435035624R1	NSP
R5223	CHIP TYPE CARBON RESISTOR	RN72K1J-562JE	1	435035624R1	NSP
R5241	CHIP TYPE CARBON RESISTOR	RN72K1J-182JE	1	435031824R1	NSP
R5242	CHIP TYPE CARBON RESISTOR	RN72K1J-182JE	1	435031824R1	NSP
R5243	CHIP TYPE CARBON RESISTOR	RN72K1J-182JE	1	435031824R1	NSP
R5301	CHIP TYPE CARBON RESISTOR	RN72K1J-152JE	1	435031524R1	NSP
R5302	CHIP TYPE CARBON RESISTOR	RN72K1J-152JE	1	435031524R1	NSP
R5303	CHIP TYPE CARBON RESISTOR	RN72K1J-152JE	1	435031524R1	NSP
R5321	CHIP TYPE CARBON RESISTOR	RN72K1J-152JE	1	435031524R1	NSP
R5322	CHIP TYPE CARBON RESISTOR	RN72K1J-152JE	1	435031524R1	NSP
R5323	CHIP TYPE CARBON RESISTOR	RN72K1J-152JE	1	435031524R1	NSP
R5381	NON-FLAMMABLE CARBON FILM RESISTO	R25J-220	1	415472214T	
R5382	NON-FLAMMABLE CARBON FILM RESISTO	R25J-220	1	415472214T	
R5383	NON-FLAMMABLE CARBON FILM RESISTO	R25J-220	1	415472214T	
R5401	NON-FLAMMABLE CARBON FILM RESISTO	R25J-220	1	415472214T	
R5402	NON-FLAMMABLE CARBON FILM RESISTO	R25J-220	1	415472214T	
R5403	NON-FLAMMABLE CARBON FILM RESISTO	R25J-220	1	415472214T	
R5421	NON-FLAMMABLE CARBON FILM RESISTO	R25J-220	1	415472214T	
R5422	NON-FLAMMABLE CARBON FILM RESISTO	R25J-220	1	415472214T	
R5423	NON-FLAMMABLE CARBON FILM RESISTO	R25J-220	1	415472214T	
R5441	NON-FLAMMABLE CARBON FILM RESISTO	R25J-220	1	415472214T	
R5442	NON-FLAMMABLE CARBON FILM RESISTO	R25J-220	1	415472214T	
R5443	NON-FLAMMABLE CARBON FILM RESISTO	R25J-220	1	415472214T	
R5461	NON-FLAMMABLE CARBON FILM RESISTO	R25J-33K	1	415473334T	
R5462	NON-FLAMMABLE CARBON FILM RESISTO	R25J-33K	1	415473334T	
R5463	NON-FLAMMABLE CARBON FILM RESISTO	R25J-33K	1	415473334T	
R5481	NON-FLAMMABLE CARBON FILM RESISTO	R25J-33K	1	415473334T	

R5482	NON-FLAMMABLE CARBON FILM RESISTO	R25J-33K	1	415473334T		
R5483	NON-FLAMMABLE CARBON FILM RESISTO	R25J-33K	1	415473334T		
R5501	NON-FLAMMABLE CARBON FILM RESISTO	R25J-10	1	415471004T		
R5502	NON-FLAMMABLE CARBON FILM RESISTO	R25J-10	1	415471004T		
R5503	NON-FLAMMABLE CARBON FILM RESISTO	R25J-10	1	415471004T		
R5521	NON-FLAMMABLE CARBON FILM RESISTO	R25J-10	1	415471004T		
R5522	NON-FLAMMABLE CARBON FILM RESISTO	R25J-10	1	415471004T		
R5523	NON-FLAMMABLE CARBON FILM RESISTO	R25J-10	1	415471004T		
R5721	CHIP TYPE CARBON RESISTOR	RN72K1J-152FE	1	435031522R1		NSP
R5722	CHIP TYPE CARBON RESISTOR	RN72K1J-152FE	1	435031522R1		NSP
R5723	CHIP TYPE CARBON RESISTOR	RN72K1J-152FE	1	435031522R1		NSP
R5741	CHIP TYPE CARBON RESISTOR	RN72K1J-152FE	1	435031522R1		NSP
R5742	CHIP TYPE CARBON RESISTOR	RN72K1J-152FE	1	435031522R1		NSP
R5743	CHIP TYPE CARBON RESISTOR	RN72K1J-152FE	1	435031522R1		NSP
R5781	CHIP TYPE CARBON RESISTOR	RN72K1J-222FE	1	435032222R1		NSP
R5782	CHIP TYPE CARBON RESISTOR	RN72K1J-272FE	1	435032722R1		NSP
R5783	CHIP TYPE CARBON RESISTOR	RN72K1J-222FE	1	435032222R1		NSP
R5821	NON-FLAMMABLE CARBON FILM RESISTO	R25J-2.2	1	415470224T		
R5822	NON-FLAMMABLE CARBON FILM RESISTO	R25J-2.2	1	415470224T		
R5823	NON-FLAMMABLE CARBON FILM RESISTO	R25J-2.2	1	415470224T		
R5881	CHIP TYPE CARBON RESISTOR	RN72K1J-000JE	1	435030004R1		NSP
R5882	CHIP TYPE CARBON RESISTOR	RN72K1J-000JE	1	435030004R1		NSP
R5883	CHIP TYPE CARBON RESISTOR	RN72K1J-000JE	1	435030004R1		NSP
R6201	CHIP TYPE CARBON RESISTOR	RN72K1J-000JE	1	435030004R1		NSP
R6202	CHIP TYPE CARBON RESISTOR	RN72K1J-000JE	1	435030004R1		NSP
R6203	CHIP TYPE CARBON RESISTOR	RN72K1J-000JE	1	435030004R1		NSP
R6301	NON-FLAMMABLE CARBON FILM RESISTO	R25J-150	1	415471514T		
R6302	NON-FLAMMABLE CARBON FILM RESISTO	R25J-150	1	415471514T		
R6303	NON-FLAMMABLE CARBON FILM RESISTO	R25J-150	1	415471514T		
R6401	NON-FLAMMABLE CARBON FILM RESISTO	R25J-56K	1	415475634T		
R6402	NON-FLAMMABLE CARBON FILM RESISTO	R25J-56K	1	415475634T		
R6403	NON-FLAMMABLE CARBON FILM RESISTO	R25J-56K	1	415475634T		
R6421	CHIP TYPE CARBON RESISTOR	RN72K1J-182JE	1	435031824R1		NSP
R6422	CHIP TYPE CARBON RESISTOR	RN72K1J-182JE	1	435031824R1		NSP
R6423	CHIP TYPE CARBON RESISTOR	RN72K1J-182JE	1	435031824R1		NSP
R9002	CHIP TYPE CARBON RESISTOR	RN72K1J-000JE	1	435030004R1		NSP
R9006	CHIP TYPE CARBON RESISTOR	RN72K1J-392JE	1	435033924R1		NSP
R9007	CHIP TYPE CARBON RESISTOR	RN72K1J-273FE	1	435032732R1		NSP
R9008	CHIP TYPE CARBON RESISTOR	RN72K1J-822JE	1	435038224R1		NSP
R9009	CHIP TYPE CARBON RESISTOR	RN72K1J-103JE	1	435031034R1		NSP
R9010	METAL OXIDE FILM RESISTOR	RS1/2WBJ-68	1	443526804T		NSP
R9011	NON-FLAMMABLE CARBON FILM RESISTO	R25J-22	1	415472204T		
R9014	METAL RESISTOR	RNU1WCJ-1	1	453630104T		NSP
R9017	CHIP TYPE CARBON RESISTOR	RN72K1J-332JE	1	435033324R1		NSP
R9018	CHIP TYPE CARBON RESISTOR	RN72K1J-182JE	1	435031824R1		NSP
R9022	CHIP TYPE CARBON RESISTOR	RN72K1J-152JE	1	435031524R1		NSP
R9023	CHIP TYPE CARBON RESISTOR	KTR18EZPF6803	1	435236842R1		NSP
R9024	CHIP TYPE CARBON RESISTOR	KTR18EZPF6803	1	435236842R1		NSP
R9025	CHIP TYPE CARBON RESISTOR	KTR18EZPF6803	1	435236842R1		NSP
R9027	METAL OXIDE FILM RESISTOR	RS1/2WBJ-220	1	443522214T		NSP
R9057	CHIP TYPE CARBON RESISTOR	RN72K1J-332JE	1	435033324R1		NSP
R9058	CHIP TYPE CARBON RESISTOR	RN72K1J-332JE	1	435033324R1		NSP
[Switches, Terminals, Wires]						
F9001	FUSE	T1A-SEUL-T250V	1	252397T	!	
F9002C	FUSE HOLDER	NSCT-1P2031	1	25052133T	!	NSP

F9002D	FUSE HOLDER	NSCT-1P2031	1	25052133T	!	NSP
P140	PRINTED WIRING BOARD	BCCLA-2030	1	25142030A		NSP
P140B	PRINTED WIRING BOARD	BCPS-2031	{1}	25142031	N	NSP
P5509B	RETAINER	(CLA-L)	1	27142312		NSP
P6001A	SOCKET	NSCT-9P2189	1	25052292		NSP
P6002A	SOCKET	NSCT-9P2189	1	25052292		NSP
P6003A	SOCKET	NSCT-9P2189	1	25052292		NSP
P9001A	PLUG	NPLG-2P631	1	25055675		NSP
P9002	PLUG	NPLG-2P631	1	25055675		NSP
P9011	WIRE HARNESS ASSEMBLY	NSAS-5P2109	1	2009991298UL		NSP
P9011A	WIRE HOL	CHD-1.5-5	1	25053536		NSP
P9011Aor	WIRE HOL	NSCT-5P876	(1)	25051089		NSP
RL9001	RELAY	NRL-1P10A-DC9-188	1	25065693	!	

BADG-2032-2A

<Note>

1. Parts marked by "**NSP**" are generally unavailable because they are not in our Master Spare Parts List.
2. The ! mark found on some component parts indicates the importance of the safety factor of the part.
   Therefore, when replacing, be sure to use parts of identical designation.

: NSP

REF. NO.	PART NAME	DESCRIPTION	Q'TY	PART NO. (SN)		REMARKS
[Semi-conductors]						
Q1501	HYBRID IC	NJM4580CG	1	22242922R2		NSP
Q1503	HYBRID IC	NJM4580CG	1	22242922R2		NSP
Q1505	HYBRID IC	NJM4580CG	1	22242922R2		NSP
Q1507	HYBRID IC	NJM4580CG	1	22242922R2		NSP
Q1521	HYBRID IC	NJM4580CG	1	22242922R2		NSP
Q1522	HYBRID IC	NJM4580CG	1	22242922R2		NSP
Q1523	HYBRID IC	NJM4580CG	1	22242922R2		NSP
Q1524	HYBRID IC	NJM4580CG	1	22242922R2		NSP
Q1525	HYBRID IC	NJM4580CG	1	22242922R2		NSP
Q1526	HYBRID IC	NJM4580CG	1	22242922R2		NSP
Q1527	HYBRID IC	NJM4580CG	1	22242922R2		NSP
Q1528	HYBRID IC	NJM4580CG	1	22242922R2		NSP
Q1541	HYBRID IC	NJM4580CG	1	22242922R2		NSP
Q1542	HYBRID IC	NJM4580CG	1	22242922R2		NSP
Q1543	HYBRID IC	NJM4580CG	1	22242922R2		NSP
Q1544	HYBRID IC	NJM4580CG	1	22242922R2		NSP
Q1545	HYBRID IC	NJM4580CG	1	22242922R2		NSP
Q1546	HYBRID IC	NJM4580CG	1	22242922R2		NSP
Q1547	HYBRID IC	NJM4580CG	1	22242922R2		NSP
Q1548	HYBRID IC	NJM4580CG	1	22242922R2		NSP
Q1921	HYBRID IC	TC7WU04FU(TE12L_F)	1	22240935R2		NSP
Q1922	PHOTO COUPLER	JSR1165-001recieving	1	24120143		
Q1923	PHOTO COUPLER	JSR1165-001recieving	1	24120143		
[Transformers, Coils]						
L1921	EMI SUPPRESSION FILTER	BK1608HS102-T	1	230955R2		NSP
L1922	CHOKE COIL	LBC2518T470M	1	231364M470R2		NSP
[Capacitors]						

C1501	UPZ TYPE PLASTIC FILM CAPACITOR	2AUPZTF681JE	1	376336814T	NSP
C1502	UPZ TYPE PLASTIC FILM CAPACITOR	2AUPZTF681JE	1	376336814T	NSP
C1503	UPZ TYPE PLASTIC FILM CAPACITOR	2AUPZTF681JE	1	376336814T	NSP
C1504	UPZ TYPE PLASTIC FILM CAPACITOR	2AUPZTF681JE	1	376336814T	NSP
C1505	UPZ TYPE PLASTIC FILM CAPACITOR	2AUPZTF681JE	1	376336814T	NSP
C1506	UPZ TYPE PLASTIC FILM CAPACITOR	2AUPZTF681JE	1	376336814T	NSP
C1507	UPZ TYPE PLASTIC FILM CAPACITOR	2AUPZTF681JE	1	376336814T	NSP
C1508	UPZ TYPE PLASTIC FILM CAPACITOR	2AUPZTF681JE	1	376336814T	NSP
C1521	UMXR TYPE PLASTIC FILM CAPACITOR	1JUMXRTF122JE	1	376591224T	NSP
C1522	UMXR TYPE PLASTIC FILM CAPACITOR	1JUMXRTF122JE	1	376591224T	NSP
C1523	UMXR TYPE PLASTIC FILM CAPACITOR	1JUMXRTF122JE	1	376591224T	NSP
C1524	UMXR TYPE PLASTIC FILM CAPACITOR	1JUMXRTF122JE	1	376591224T	NSP
C1525	UMXR TYPE PLASTIC FILM CAPACITOR	1JUMXRTF122JE	1	376591224T	NSP
C1526	UMXR TYPE PLASTIC FILM CAPACITOR	1JUMXRTF122JE	1	376591224T	NSP
C1527	UMXR TYPE PLASTIC FILM CAPACITOR	1JUMXRTF122JE	1	376591224T	NSP
C1528	UMXR TYPE PLASTIC FILM CAPACITOR	1JUMXRTF122JE	1	376591224T	NSP
C1541	UPZ TYPE PLASTIC FILM CAPACITOR	2AUPZTF681JE	1	376336814T	NSP
C1542	UPZ TYPE PLASTIC FILM CAPACITOR	2AUPZTF681JE	1	376336814T	NSP
C1543	UPZ TYPE PLASTIC FILM CAPACITOR	2AUPZTF681JE	1	376336814T	NSP
C1544	UPZ TYPE PLASTIC FILM CAPACITOR	2AUPZTF681JE	1	376336814T	NSP
C1545	UPZ TYPE PLASTIC FILM CAPACITOR	2AUPZTF681JE	1	376336814T	NSP
C1546	UPZ TYPE PLASTIC FILM CAPACITOR	2AUPZTF681JE	1	376336814T	NSP
C1547	UPZ TYPE PLASTIC FILM CAPACITOR	2AUPZTF681JE	1	376336814T	NSP
C1548	UPZ TYPE PLASTIC FILM CAPACITOR	2AUPZTF681JE	1	376336814T	NSP
C1561	UPZ TYPE PLASTIC FILM CAPACITOR	2AUPZTF681JE	1	376336814T	NSP
C1562	UPZ TYPE PLASTIC FILM CAPACITOR	2AUPZTF681JE	1	376336814T	NSP
C1563	UPZ TYPE PLASTIC FILM CAPACITOR	2AUPZTF681JE	1	376336814T	NSP
C1564	UPZ TYPE PLASTIC FILM CAPACITOR	2AUPZTF681JE	1	376336814T	NSP
C1565	UPZ TYPE PLASTIC FILM CAPACITOR	2AUPZTF681JE	1	376336814T	NSP
C1566	UPZ TYPE PLASTIC FILM CAPACITOR	2AUPZTF681JE	1	376336814T	NSP
C1567	UPZ TYPE PLASTIC FILM CAPACITOR	2AUPZTF681JE	1	376336814T	NSP
C1568	UPZ TYPE PLASTIC FILM CAPACITOR	2AUPZTF681JE	1	376336814T	NSP
C1581	CHIP TYPE PLASTIC FILM CAPACITOR	ECHUX50V-222J	1	376622224R2	NSP
C1582	CHIP TYPE PLASTIC FILM CAPACITOR	ECHUX50V-222J	1	376622224R2	NSP
C1583	CHIP TYPE PLASTIC FILM CAPACITOR	ECHUX50V-222J	1	376622224R2	NSP
C1584	CHIP TYPE PLASTIC FILM CAPACITOR	ECHUX50V-222J	1	376622224R2	NSP
C1585	CHIP TYPE PLASTIC FILM CAPACITOR	ECHUX50V-222J	1	376622224R2	NSP
C1586	CHIP TYPE PLASTIC FILM CAPACITOR	ECHUX50V-222J	1	376622224R2	NSP
C1587	CHIP TYPE PLASTIC FILM CAPACITOR	ECHUX50V-222J	1	376622224R2	NSP
C1588	CHIP TYPE PLASTIC FILM CAPACITOR	ECHUX50V-222J	1	376622224R2	NSP
C1601	CHIP TYPE PLASTIC FILM CAPACITOR	ECHUX50V-471J	1	376624714R2	NSP
C1602	CHIP TYPE PLASTIC FILM CAPACITOR	ECHUX50V-471J	1	376624714R2	NSP
C1603	CHIP TYPE PLASTIC FILM CAPACITOR	ECHUX50V-471J	1	376624714R2	NSP
C1604	CHIP TYPE PLASTIC FILM CAPACITOR	ECHUX50V-471J	1	376624714R2	NSP
C1605	CHIP TYPE PLASTIC FILM CAPACITOR	ECHUX50V-471J	1	376624714R2	NSP
C1606	CHIP TYPE PLASTIC FILM CAPACITOR	ECHUX50V-471J	1	376624714R2	NSP
C1607	CHIP TYPE PLASTIC FILM CAPACITOR	ECHUX50V-471J	1	376624714R2	NSP
C1608	CHIP TYPE PLASTIC FILM CAPACITOR	ECHUX50V-471J	1	376624714R2	NSP
C1621	CHIP TYPE PLASTIC FILM CAPACITOR	ECHUX50V-101J	1	376621014R2	NSP
C1622	CHIP TYPE PLASTIC FILM CAPACITOR	ECHUX50V-101J	1	376621014R2	NSP
C1623	CHIP TYPE PLASTIC FILM CAPACITOR	ECHUX50V-101J	1	376621014R2	NSP
C1624	CHIP TYPE PLASTIC FILM CAPACITOR	ECHUX50V-101J	1	376621014R2	NSP
C1625	CHIP TYPE PLASTIC FILM CAPACITOR	ECHUX50V-101J	1	376621014R2	NSP
C1626	CHIP TYPE PLASTIC FILM CAPACITOR	ECHUX50V-101J	1	376621014R2	NSP
C1627	CHIP TYPE PLASTIC FILM CAPACITOR	ECHUX50V-101J	1	376621014R2	NSP

C1628	CHIP TYPE PLASTIC FILM CAPACITOR	ECHUX50V-101J	1	376621014R2	NSP
C1641	CHIP TYPE PLASTIC FILM CAPACITOR	ECHUX50V-222J	1	376622224R2	NSP
C1642	CHIP TYPE PLASTIC FILM CAPACITOR	ECHUX50V-222J	1	376622224R2	NSP
C1643	CHIP TYPE PLASTIC FILM CAPACITOR	ECHUX50V-222J	1	376622224R2	NSP
C1644	CHIP TYPE PLASTIC FILM CAPACITOR	ECHUX50V-222J	1	376622224R2	NSP
C1645	CHIP TYPE PLASTIC FILM CAPACITOR	ECHUX50V-222J	1	376622224R2	NSP
C1646	CHIP TYPE PLASTIC FILM CAPACITOR	ECHUX50V-222J	1	376622224R2	NSP
C1647	CHIP TYPE PLASTIC FILM CAPACITOR	ECHUX50V-222J	1	376622224R2	NSP
C1648	CHIP TYPE PLASTIC FILM CAPACITOR	ECHUX50V-222J	1	376622224R2	NSP
C1901	UTSP TYPE ELECTROLYTIC CAPACITOR	CE04W25V-100M(UTSP)	1	397551017AT	
C1902	UTSP TYPE ELECTROLYTIC CAPACITOR	CE04W25V-100M(UTSP)	1	397551017AT	
C1903	UTSP TYPE ELECTROLYTIC CAPACITOR	CE04W25V-470M(UTSP)	1	397554717T	
C1904	UTSP TYPE ELECTROLYTIC CAPACITOR	CE04W25V-470M(UTSP)	1	397554717T	
C1911	CHIP TYPE CERAMIC CAPACITOR	CK725F1E-104Z1	1	332161040R1	NSP
C1922	CHIP TYPE CERAMIC CAPACITOR	CK725B1C-104K1	1	332121045R1	NSP
C1923	CHIP TYPE CERAMIC CAPACITOR	CC725CH1H-080D1	1	342100802R1	NSP
C1924	UTSP TYPE ELECTROLYTIC CAPACITOR	CE04W10V-220M(UTSP)	1	397532217AT	
C1925	CHIP TYPE CERAMIC CAPACITOR	CK725F1E-104Z1	1	332161040R1	NSP
C1926	CHIP TYPE CERAMIC CAPACITOR	CK725F1E-104Z1	1	332161040R1	NSP
C1927	CHIP TYPE CERAMIC CAPACITOR	CC725CH1H-330J1	1	342103304R1	NSP
C1928	CHIP TYPE CERAMIC CAPACITOR	CK725F1E-104Z1	1	332161040R1	NSP
C1929	CHIP TYPE CERAMIC CAPACITOR	CC725CH1H-330J1	1	342103304R1	NSP
[Resistors]					
R1501	CHIP TYPE CARBON RESISTOR	RN72K1J-102JE	1	435031024R1	NSP
R1502	CHIP TYPE CARBON RESISTOR	RN72K1J-102JE	1	435031024R1	NSP
R1503	CHIP TYPE CARBON RESISTOR	RN72K1J-102JE	1	435031024R1	NSP
R1504	CHIP TYPE CARBON RESISTOR	RN72K1J-102JE	1	435031024R1	NSP
R1505	CHIP TYPE CARBON RESISTOR	RN72K1J-102JE	1	435031024R1	NSP
R1506	CHIP TYPE CARBON RESISTOR	RN72K1J-102JE	1	435031024R1	NSP
R1507	CHIP TYPE CARBON RESISTOR	RN72K1J-102JE	1	435031024R1	NSP
R1508	CHIP TYPE CARBON RESISTOR	RN72K1J-102JE	1	435031024R1	NSP
R1521	CHIP TYPE CARBON RESISTOR	RN72K1J-102JE	1	435031024R1	NSP
R1522	CHIP TYPE CARBON RESISTOR	RN72K1J-102JE	1	435031024R1	NSP
R1523	CHIP TYPE CARBON RESISTOR	RN72K1J-102JE	1	435031024R1	NSP
R1524	CHIP TYPE CARBON RESISTOR	RN72K1J-102JE	1	435031024R1	NSP
R1525	CHIP TYPE CARBON RESISTOR	RN72K1J-102JE	1	435031024R1	NSP
R1526	CHIP TYPE CARBON RESISTOR	RN72K1J-102JE	1	435031024R1	NSP
R1527	CHIP TYPE CARBON RESISTOR	RN72K1J-102JE	1	435031024R1	NSP
R1528	CHIP TYPE CARBON RESISTOR	RN72K1J-102JE	1	435031024R1	NSP
R1541	CHIP TYPE CARBON RESISTOR	RN72K1J-152JE	1	435031524R1	NSP
R1542	CHIP TYPE CARBON RESISTOR	RN72K1J-152JE	1	435031524R1	NSP
R1543	CHIP TYPE CARBON RESISTOR	RN72K1J-152JE	1	435031524R1	NSP
R1544	CHIP TYPE CARBON RESISTOR	RN72K1J-152JE	1	435031524R1	NSP
R1545	CHIP TYPE CARBON RESISTOR	RN72K1J-152JE	1	435031524R1	NSP
R1546	CHIP TYPE CARBON RESISTOR	RN72K1J-152JE	1	435031524R1	NSP
R1547	CHIP TYPE CARBON RESISTOR	RN72K1J-152JE	1	435031524R1	NSP
R1548	CHIP TYPE CARBON RESISTOR	RN72K1J-152JE	1	435031524R1	NSP
R1561	CHIP TYPE CARBON RESISTOR	RN72K1J-152JE	1	435031524R1	NSP
R1562	CHIP TYPE CARBON RESISTOR	RN72K1J-152JE	1	435031524R1	NSP
R1563	CHIP TYPE CARBON RESISTOR	RN72K1J-152JE	1	435031524R1	NSP
R1564	CHIP TYPE CARBON RESISTOR	RN72K1J-152JE	1	435031524R1	NSP
R1565	CHIP TYPE CARBON RESISTOR	RN72K1J-152JE	1	435031524R1	NSP
R1566	CHIP TYPE CARBON RESISTOR	RN72K1J-152JE	1	435031524R1	NSP
R1567	CHIP TYPE CARBON RESISTOR	RN72K1J-152JE	1	435031524R1	NSP
R1568	CHIP TYPE CARBON RESISTOR	RN72K1J-152JE	1	435031524R1	NSP

R1581	CHIP TYPE CARBON RESISTOR	RN72K1J-222JE	1	435032224R1	NSP
R1582	CHIP TYPE CARBON RESISTOR	RN72K1J-222JE	1	435032224R1	NSP
R1583	CHIP TYPE CARBON RESISTOR	RN72K1J-222JE	1	435032224R1	NSP
R1584	CHIP TYPE CARBON RESISTOR	RN72K1J-222JE	1	435032224R1	NSP
R1585	CHIP TYPE CARBON RESISTOR	RN72K1J-222JE	1	435032224R1	NSP
R1586	CHIP TYPE CARBON RESISTOR	RN72K1J-222JE	1	435032224R1	NSP
R1587	CHIP TYPE CARBON RESISTOR	RN72K1J-222JE	1	435032224R1	NSP
R1588	CHIP TYPE CARBON RESISTOR	RN72K1J-222JE	1	435032224R1	NSP
R1601	CHIP TYPE CARBON RESISTOR	RN72K1J-222JE	1	435032224R1	NSP
R1602	CHIP TYPE CARBON RESISTOR	RN72K1J-222JE	1	435032224R1	NSP
R1603	CHIP TYPE CARBON RESISTOR	RN72K1J-222JE	1	435032224R1	NSP
R1604	CHIP TYPE CARBON RESISTOR	RN72K1J-222JE	1	435032224R1	NSP
R1605	CHIP TYPE CARBON RESISTOR	RN72K1J-222JE	1	435032224R1	NSP
R1606	CHIP TYPE CARBON RESISTOR	RN72K1J-222JE	1	435032224R1	NSP
R1607	CHIP TYPE CARBON RESISTOR	RN72K1J-222JE	1	435032224R1	NSP
R1608	CHIP TYPE CARBON RESISTOR	RN72K1J-222JE	1	435032224R1	NSP
R1621	CHIP TYPE CARBON RESISTOR	RN72K1J-121JE	1	435031214R1	NSP
R1622	CHIP TYPE CARBON RESISTOR	RN72K1J-121JE	1	435031214R1	NSP
R1623	CHIP TYPE CARBON RESISTOR	RN72K1J-121JE	1	435031214R1	NSP
R1624	CHIP TYPE CARBON RESISTOR	RN72K1J-121JE	1	435031214R1	NSP
R1625	CHIP TYPE CARBON RESISTOR	RN72K1J-121JE	1	435031214R1	NSP
R1626	CHIP TYPE CARBON RESISTOR	RN72K1J-121JE	1	435031214R1	NSP
R1627	CHIP TYPE CARBON RESISTOR	RN72K1J-121JE	1	435031214R1	NSP
R1628	CHIP TYPE CARBON RESISTOR	RN72K1J-121JE	1	435031214R1	NSP
R1641	CHIP TYPE CARBON RESISTOR	RN72K1J-121JE	1	435031214R1	NSP
R1642	CHIP TYPE CARBON RESISTOR	RN72K1J-121JE	1	435031214R1	NSP
R1643	CHIP TYPE CARBON RESISTOR	RN72K1J-121JE	1	435031214R1	NSP
R1644	CHIP TYPE CARBON RESISTOR	RN72K1J-121JE	1	435031214R1	NSP
R1645	CHIP TYPE CARBON RESISTOR	RN72K1J-121JE	1	435031214R1	NSP
R1646	CHIP TYPE CARBON RESISTOR	RN72K1J-121JE	1	435031214R1	NSP
R1647	CHIP TYPE CARBON RESISTOR	RN72K1J-121JE	1	435031214R1	NSP
R1648	CHIP TYPE CARBON RESISTOR	RN72K1J-121JE	1	435031214R1	NSP
R1661	CHIP TYPE CARBON RESISTOR	RN72K1J-222JE	1	435032224R1	NSP
R1662	CHIP TYPE CARBON RESISTOR	RN72K1J-222JE	1	435032224R1	NSP
R1663	CHIP TYPE CARBON RESISTOR	RN72K1J-222JE	1	435032224R1	NSP
R1664	CHIP TYPE CARBON RESISTOR	RN72K1J-222JE	1	435032224R1	NSP
R1665	CHIP TYPE CARBON RESISTOR	RN72K1J-222JE	1	435032224R1	NSP
R1666	CHIP TYPE CARBON RESISTOR	RN72K1J-222JE	1	435032224R1	NSP
R1667	CHIP TYPE CARBON RESISTOR	RN72K1J-222JE	1	435032224R1	NSP
R1668	CHIP TYPE CARBON RESISTOR	RN72K1J-222JE	1	435032224R1	NSP
R1681	CHIP TYPE CARBON RESISTOR	RN72K1J-472JE	1	435034724R1	NSP
R1682	CHIP TYPE CARBON RESISTOR	RN72K1J-472JE	1	435034724R1	NSP
R1683	CHIP TYPE CARBON RESISTOR	RN72K1J-472JE	1	435034724R1	NSP
R1684	CHIP TYPE CARBON RESISTOR	RN72K1J-472JE	1	435034724R1	NSP
R1685	CHIP TYPE CARBON RESISTOR	RN72K1J-472JE	1	435034724R1	NSP
R1686	CHIP TYPE CARBON RESISTOR	RN72K1J-472JE	1	435034724R1	NSP
R1687	CHIP TYPE CARBON RESISTOR	RN72K1J-472JE	1	435034724R1	NSP
R1688	CHIP TYPE CARBON RESISTOR	RN72K1J-472JE	1	435034724R1	NSP
R1701	CHIP TYPE CARBON RESISTOR	RN72K1J-472JE	1	435034724R1	NSP
R1702	CHIP TYPE CARBON RESISTOR	RN72K1J-472JE	1	435034724R1	NSP
R1703	CHIP TYPE CARBON RESISTOR	RN72K1J-472JE	1	435034724R1	NSP
R1704	CHIP TYPE CARBON RESISTOR	RN72K1J-472JE	1	435034724R1	NSP
R1705	CHIP TYPE CARBON RESISTOR	RN72K1J-472JE	1	435034724R1	NSP
R1706	CHIP TYPE CARBON RESISTOR	RN72K1J-472JE	1	435034724R1	NSP
R1707	CHIP TYPE CARBON RESISTOR	RN72K1J-472JE	1	435034724R1	NSP

R1708	CHIP TYPE CARBON RESISTOR	RN72K1J-472JE	1	435034724R1	NSP
R1721	CHIP TYPE CARBON RESISTOR	RN72K1J-102JE	1	435031024R1	NSP
R1722	CHIP TYPE CARBON RESISTOR	RN72K1J-102JE	1	435031024R1	NSP
R1723	CHIP TYPE CARBON RESISTOR	RN72K1J-102JE	1	435031024R1	NSP
R1724	CHIP TYPE CARBON RESISTOR	RN72K1J-102JE	1	435031024R1	NSP
R1725	CHIP TYPE CARBON RESISTOR	RN72K1J-102JE	1	435031024R1	NSP
R1726	CHIP TYPE CARBON RESISTOR	RN72K1J-102JE	1	435031024R1	NSP
R1727	CHIP TYPE CARBON RESISTOR	RN72K1J-102JE	1	435031024R1	NSP
R1728	CHIP TYPE CARBON RESISTOR	RN72K1J-102JE	1	435031024R1	NSP
R1741	CHIP TYPE CARBON RESISTOR	RN72K1J-152JE	1	435031524R1	NSP
R1742	CHIP TYPE CARBON RESISTOR	RN72K1J-152JE	1	435031524R1	NSP
R1743	CHIP TYPE CARBON RESISTOR	RN72K1J-152JE	1	435031524R1	NSP
R1744	CHIP TYPE CARBON RESISTOR	RN72K1J-152JE	1	435031524R1	NSP
R1745	CHIP TYPE CARBON RESISTOR	RN72K1J-152JE	1	435031524R1	NSP
R1746	CHIP TYPE CARBON RESISTOR	RN72K1J-152JE	1	435031524R1	NSP
R1747	CHIP TYPE CARBON RESISTOR	RN72K1J-152JE	1	435031524R1	NSP
R1748	CHIP TYPE CARBON RESISTOR	RN72K1J-152JE	1	435031524R1	NSP
R1761	CHIP TYPE CARBON RESISTOR	RN72K1J-682JE	1	435036824R1	NSP
R1762	CHIP TYPE CARBON RESISTOR	RN72K1J-682JE	1	435036824R1	NSP
R1763	CHIP TYPE CARBON RESISTOR	RN72K1J-682JE	1	435036824R1	NSP
R1764	CHIP TYPE CARBON RESISTOR	RN72K1J-682JE	1	435036824R1	NSP
R1765	CHIP TYPE CARBON RESISTOR	RN72K1J-682JE	1	435036824R1	NSP
R1766	CHIP TYPE CARBON RESISTOR	RN72K1J-682JE	1	435036824R1	NSP
R1767	CHIP TYPE CARBON RESISTOR	RN72K1J-682JE	1	435036824R1	NSP
R1768	CHIP TYPE CARBON RESISTOR	RN72K1J-682JE	1	435036824R1	NSP
R1781	CHIP TYPE CARBON RESISTOR	RN72K1J-472JE	1	435034724R1	NSP
R1782	CHIP TYPE CARBON RESISTOR	RN72K1J-472JE	1	435034724R1	NSP
R1783	CHIP TYPE CARBON RESISTOR	RN72K1J-472JE	1	435034724R1	NSP
R1784	CHIP TYPE CARBON RESISTOR	RN72K1J-472JE	1	435034724R1	NSP
R1785	CHIP TYPE CARBON RESISTOR	RN72K1J-472JE	1	435034724R1	NSP
R1786	CHIP TYPE CARBON RESISTOR	RN72K1J-472JE	1	435034724R1	NSP
R1787	CHIP TYPE CARBON RESISTOR	RN72K1J-472JE	1	435034724R1	NSP
R1788	CHIP TYPE CARBON RESISTOR	RN72K1J-472JE	1	435034724R1	NSP
R1801	CHIP TYPE CARBON RESISTOR	RN72K1J-472JE	1	435034724R1	NSP
R1802	CHIP TYPE CARBON RESISTOR	RN72K1J-472JE	1	435034724R1	NSP
R1803	CHIP TYPE CARBON RESISTOR	RN72K1J-472JE	1	435034724R1	NSP
R1804	CHIP TYPE CARBON RESISTOR	RN72K1J-472JE	1	435034724R1	NSP
R1805	CHIP TYPE CARBON RESISTOR	RN72K1J-472JE	1	435034724R1	NSP
R1806	CHIP TYPE CARBON RESISTOR	RN72K1J-472JE	1	435034724R1	NSP
R1807	CHIP TYPE CARBON RESISTOR	RN72K1J-472JE	1	435034724R1	NSP
R1808	CHIP TYPE CARBON RESISTOR	RN72K1J-472JE	1	435034724R1	NSP
R1821	CHIP TYPE CARBON RESISTOR	RN72K1J-681JE	1	435036814R1	NSP
R1822	CHIP TYPE CARBON RESISTOR	RN72K1J-681JE	1	435036814R1	NSP
R1823	CHIP TYPE CARBON RESISTOR	RN72K1J-681JE	1	435036814R1	NSP
R1824	CHIP TYPE CARBON RESISTOR	RN72K1J-681JE	1	435036814R1	NSP
R1825	CHIP TYPE CARBON RESISTOR	RN72K1J-681JE	1	435036814R1	NSP
R1826	CHIP TYPE CARBON RESISTOR	RN72K1J-681JE	1	435036814R1	NSP
R1827	CHIP TYPE CARBON RESISTOR	RN72K1J-681JE	1	435036814R1	NSP
R1828	CHIP TYPE CARBON RESISTOR	RN72K1J-681JE	1	435036814R1	NSP
R1861	CHIP TYPE CARBON RESISTOR	RN72K1J-152JE	1	435031524R1	NSP
R1862	CHIP TYPE CARBON RESISTOR	RN72K1J-152JE	1	435031524R1	NSP
R1863	CHIP TYPE CARBON RESISTOR	RN72K1J-152JE	1	435031524R1	NSP
R1864	CHIP TYPE CARBON RESISTOR	RN72K1J-152JE	1	435031524R1	NSP
R1865	CHIP TYPE CARBON RESISTOR	RN72K1J-152JE	1	435031524R1	NSP
R1866	CHIP TYPE CARBON RESISTOR	RN72K1J-152JE	1	435031524R1	NSP

R1867	CHIP TYPE CARBON RESISTOR	RN72K1J-152JE	1	435031524R1	NSP
R1868	CHIP TYPE CARBON RESISTOR	RN72K1J-152JE	1	435031524R1	NSP
R1881	CHIP TYPE CARBON RESISTOR	RN72K1J-470JE	1	435034704R1	NSP
R1882	CHIP TYPE CARBON RESISTOR	RN72K1J-470JE	1	435034704R1	NSP
R1883	CHIP TYPE CARBON RESISTOR	RN72K1J-470JE	1	435034704R1	NSP
R1884	CHIP TYPE CARBON RESISTOR	RN72K1J-470JE	1	435034704R1	NSP
R1885	CHIP TYPE CARBON RESISTOR	RN72K1J-470JE	1	435034704R1	NSP
R1886	CHIP TYPE CARBON RESISTOR	RN72K1J-470JE	1	435034704R1	NSP
R1887	CHIP TYPE CARBON RESISTOR	RN72K1J-470JE	1	435034704R1	NSP
R1888	CHIP TYPE CARBON RESISTOR	RN72K1J-470JE	1	435034704R1	NSP
R1901	CHIP TYPE CARBON RESISTOR	RN72K2E-220JE	1	435222204R1	NSP
R1902	CHIP TYPE CARBON RESISTOR	RN72K2E-220JE	1	435222204R1	NSP
R1903	CHIP TYPE CARBON RESISTOR	RN72K2E-047JE	1	435220474R1	NSP
R1904	CHIP TYPE CARBON RESISTOR	RN72K2E-047JE	1	435220474R1	NSP
R1921	CHIP TYPE CARBON RESISTOR	RN72K1J-750JE	1	435037504R1	NSP
R1922	CHIP TYPE CARBON RESISTOR	RN72K1J-100JE	1	435031004R1	NSP
R1924	CHIP TYPE CARBON RESISTOR	RN72K1J-823JE	1	435038234R1	NSP
R1925	CHIP TYPE CARBON RESISTOR	RN72K1J-103JE	1	435031034R1	NSP
R1926	CHIP TYPE CARBON RESISTOR	RN72K1J-470JE	1	435034704R1	NSP
R1927	CHIP TYPE CARBON RESISTOR	RN72K1J-470JE	1	435034704R1	NSP
[Switches, Terminals, Wires]					
P101B	SOCKET	NSCT-7P2100	1	25052203	NSP
P150	PRINTED WIRING BOARD	BCDG-2032	1	25142032	NSP
P1501A	PLUG	IMSA-9142B-22A	1	25056601	NSP
P1502A	PLUG	IMSA-9142B-22A	1	25056601	NSP
P1512A	TRM-423(SCREW)	NEJITANSI ST3	1	25060495	NSP
P1921	PIN JACK	NPJ-1PDO554	1	25045772	
P8002A	SOCKET	IMSA-9850S-30	1	25053215	NSP
P8003A	SOCKET	IMSA-9850S-30	1	25053215	NSP

BADIS-1990-2A

<Note>

1. Parts marked by "**NSP**" are generally unavailable because they are not in our Master Spare Parts List.
2. The ! mark found on some component parts indicates the importance of the safety factor of the part.
   Therefore, when replacing, be sure to use parts of identical designation.

: NSP

REF. NO.	PART NAME	DESCRIPTION	Q'TY	PART NO. (SN)	REMARKS
[Semi-conductors]					
D7500	ZENER DIODE	DZ2J039M0L	1	224760390R2	NSP
D7750	LED	HLMP-Y701	1	225528	
D7751	LED	SCB3318E-D2	1	225487	
D7751A	HOLDER	(LED-LH5-2)	1	27191336	NSP
D7851	ZENER DIODE	DZ2J068M0L	1	224760680R2	NSP
D7852	ZENER DIODE	DZ2J068M0L	1	224760680R2	NSP
D7900	DIODE	RL1N4003	1	22380260T	NSP
D7901	DIODE	RL1N4003	1	22380260T	NSP
D7902	DIODE	RL1N4003	1	22380260T	NSP
D7903	DIODE	RL1N4003	1	22380260T	NSP
D7904	ZENER DIODE	DZ2J200M0L	1	224762000R2	NSP

D7905	ZENER DIODE	DZ2J180M0L	1	224761800R2	NSP
D7906	ZENER DIODE	DZ2J075M0L	1	224760750R2	NSP
Q1	HYBRID IC	RZ5B801-0001E2	1	22242835R2	NSP
Q7500	TRANSISTOR	2SC2712-GR	1	2213145R2	NSP
Q7500or	TRANSISTOR	KTC3875-GR	(1)	2216175R2	NSP
Q7750	TRANSISTOR	KRC105S	1	2217290R2	NSP
Q7750or	TRANSISTOR	DTC123JCAT116	(1)	2219040R2	NSP
Q7751	TRANSISTOR	KRC105S	1	2217290R2	NSP
Q7751or	TRANSISTOR	DTC123JCAT116	(1)	2219040R2	NSP
Q7780	REMOTE SENSOR	IRM-3638M3S28	1	24130026	
Q7850	HYBRID IC	NJM4580CG	1	22242922R2	NSP
Q7851	TRANSISTOR	RTAN430C-T112-1	1	2217780R2	NSP
Q7852	TRANSISTOR	KRA102S	1	2216220R2	NSP
Q7852or	TRANSISTOR	DTA114ECAT116	(1)	2218980R2	NSP
Q7853	TRANSISTOR	KRC107S	1	2216340R2	NSP
Q7853or	TRANSISTOR	DTC114YCAT116	(1)	2219050R2	NSP
Q7855	TRANSISTOR	KRC102S	1	2216190R2	NSP
Q7855or	TRANSISTOR	DTC114ECAT116	(1)	2219010R2	NSP
Q7900	TRANSISTOR	INC5001AP1-T111	1	2218100R2	NSP
Q7900or	TRANSISTOR	2SC2881-Y	(1)	2217564AR2	NSP
Q7901	TRANSISTOR	INA5001AP1-T111	1	2218030R2	NSP
Q7901or	TRANSISTOR	2SA1201-Y	(1)	2217554AR2	NSP
Q7902	TRANSISTOR	KRC107S	1	2216340R2	NSP
Q7902or	TRANSISTOR	DTC114YCAT116	(1)	2219050R2	NSP
Q7903	TRANSISTOR	2SC2712-GR	1	2213145R2	NSP
Q7903or	TRANSISTOR	KTC3875-GR	(1)	2216175R2	NSP
Q7904	TRANSISTOR	2SC2712-GR	1	2213145R2	NSP
Q7904or	TRANSISTOR	KTC3875-GR	(1)	2216175R2	NSP
Q7905	FLUORESCENT TUBE	016MT096GINYK	1	212285A	
Q7905A	HOLDER	(FL)	1	27191414	NSP
X1	CRYSTAL	HC-49S 9B12.000MHz	1	3010533	
[Transformers, Coils]					
L1	CHIP TYPE CARBON RESISTOR	RN72K1J-000JE	1	435030004R1	NSP
L2	CHIP TYPE CARBON RESISTOR	RN72K1J-000JE	1	435030004R1	NSP
L3	RF COIL	SDCL1608CR33JTDF	1	233557R1	NSP
L4	RF COIL	SDCL1608CR10JTDF	1	233556R1	NSP
L5	ANTENNA COIL	K7-D	1	232212	
L7900	CHOKE COIL	LBC2518T2R2M	1	231364M022R2	NSP
L7901	CHOKE COIL	LBC2518T2R2M	1	231364M022R2	NSP
[Capacitors]					
C1	CHIP TYPE CERAMIC CAPACITOR	CC725CH1H-101J1	1	342101014R1	NSP
C12	CHIP TYPE CERAMIC CAPACITOR	CC725CH1H-090D1	1	342100902R1	NSP
C13	CHIP TYPE CERAMIC CAPACITOR	CK725B1C-104K1	1	332121045R1	NSP
C2	CHIP TYPE CERAMIC CAPACITOR	CC725CH1H-220J1	1	342102204R1	NSP
C3	CHIP TYPE CERAMIC CAPACITOR	CK725B1H-332K1	1	332103325R1	NSP
C4	CHIP TYPE CERAMIC CAPACITOR	CC725CH1H-100D1	1	342101002R1	NSP
C5	CHIP TYPE CERAMIC CAPACITOR	CK725B1H-473K1	1	332104735R1	NSP
C6	CHIP TYPE CERAMIC CAPACITOR	CK725B1H-222K1	1	332102225R1	NSP
C7	CHIP TYPE CERAMIC CAPACITOR	CK725B1A-105K1	1	332131055R1	NSP
C7500	ELECTROLYTIC CAPACITOR	CE04W16V-10M(S)	1	353741009T	
C7501	CHIP TYPE CERAMIC CAPACITOR	CK725B1H-223K1	1	332102235R1	NSP
C7502	ELECTROLYTIC CAPACITOR	CE04W6.3V-100M	1	355721019T	
C7601	CHIP TYPE CERAMIC CAPACITOR	CK725B1H-102K1	1	332101025R1	NSP
C7740	CHIP TYPE CERAMIC CAPACITOR	CK725B1H-103K1	1	332101035R1	NSP
C7741	CHIP TYPE CERAMIC CAPACITOR	CK725B1H-103K1	1	332101035R1	NSP

C7770	CHIP TYPE CERAMIC CAPACITOR	CK725B1H-103K1	1	332101035R1	NSP
C7771	CHIP TYPE CERAMIC CAPACITOR	CK725B1H-103K1	1	332101035R1	NSP
C7774	CHIP TYPE CERAMIC CAPACITOR	CK725B1H-103K1	1	332101035R1	NSP
C7775	CHIP TYPE CERAMIC CAPACITOR	CK725B1H-103K1	1	332101035R1	NSP
C7780	ELECTROLYTIC CAPACITOR	CE04W16V-10M(S)	1	353741009T	
C7781	CHIP TYPE CERAMIC CAPACITOR	CC725CH1H-102J1	1	342101024R1	NSP
C7850	ELECTROLYTIC CAPACITOR	CE04W50V-10M	1	355781009T	
C7851	CHIP TYPE CERAMIC CAPACITOR	CC725CH1H-101J1	1	342101014R1	NSP
C7853	ELECTROLYTIC CAPACITOR	CE04W16V-47M(S)	1	353744709T	
C7854	ELECTROLYTIC CAPACITOR	CE04W16V-47M(S)	1	353744709T	
C7855	CHIP TYPE CERAMIC CAPACITOR	CC725CH1H-330J1	1	342103304R1	NSP
C7856	ELECTROLYTIC CAPACITOR	CE04W35V-10M(S)	1	353761009T	
C7857	CHIP TYPE CERAMIC CAPACITOR	CK725F1E-104Z1	1	332161040R1	NSP
C7858	CHIP TYPE CERAMIC CAPACITOR	CK725B1H-104K1	1	332101045R1	NSP
C7880	CHIP TYPE CERAMIC CAPACITOR	CK725B1H-103K1	1	332101035R1	NSP
C7881	UPZ TYPE PLASTIC FILM CAPACITOR	2AUPZTF221JE	1	376332214T	NSP
C7882	UPZ TYPE PLASTIC FILM CAPACITOR	2AUPZTF221JE	1	376332214T	NSP
C7883	CHIP TYPE CERAMIC CAPACITOR	CC725CH1H-102J1	1	342101024R1	NSP
C7884	CHIP TYPE CERAMIC CAPACITOR	CC725CH1H-102J1	1	342101024R1	NSP
C7900	JAMICON TYPE ELECTROLYTIC CAPACITC	CE04W63V-47M	1	398574707T	
C7900or	VR TYPE ELECTROLYTIC CAPACITOR	CE04W63V-47M(VR)	(1)	394674707T	
C7901	JAMICON TYPE ELECTROLYTIC CAPACITC	CE04W50V-47M	1	398584707T	
C7901or	VR TYPE ELECTROLYTIC CAPACITOR	CE04W50V-47M(VR)	(1)	394684707T	
C7902	JAMICON TYPE ELECTROLYTIC CAPACITC	CE04W50V-47M	1	398584707T	
C7902or	VR TYPE ELECTROLYTIC CAPACITOR	CE04W50V-47M(VR)	(1)	394684707T	
C7903	CHIP TYPE CERAMIC CAPACITOR	CK725B1H-223K1	1	332102235R1	NSP
C7904	CHIP TYPE CERAMIC CAPACITOR	CK725B1H-223K1	1	332102235R1	NSP
C7905	ELECTROLYTIC CAPACITOR	CE04W16V-47M(S)	1	353744709T	
C7907	CHIP TYPE CERAMIC CAPACITOR	CK725B1H-223K1	1	332102235R1	NSP
C7908	CHIP TYPE CERAMIC CAPACITOR	CK725B1H-104K1	1	332101045R1	NSP
C7909	CHIP TYPE CERAMIC CAPACITOR	CK725B1H-104K1	1	332101045R1	NSP
C7910	CHIP TYPE CERAMIC CAPACITOR	CC725CH1H-101J1	1	342101014R1	NSP
C7911	CHIP TYPE CERAMIC CAPACITOR	CC725CH1H-101J1	1	342101014R1	NSP
C7912	CHIP TYPE CERAMIC CAPACITOR	CC725CH1H-101J1	1	342101014R1	NSP
C7913	CHIP TYPE CERAMIC CAPACITOR	CC725CH1H-101J1	1	342101014R1	NSP
C7914	CHIP TYPE CERAMIC CAPACITOR	CK725F1E-104Z1	1	332161040R1	NSP
C7915	CHIP TYPE CERAMIC CAPACITOR	CK725B1H-223K1	1	332102235R1	NSP
C7916	CHIP TYPE CERAMIC CAPACITOR	CK725B1H-223K1	1	332102235R1	NSP
C8	CHIP TYPE CERAMIC CAPACITOR	CK725B1A-105K1	1	332131055R1	NSP
C9	CHIP TYPE CERAMIC CAPACITOR	CK732B16V-106K	1	332071065R2	NSP
[Resistors]					
R10	CHIP TYPE CARBON RESISTOR	RN72K1J-000JE	1	435030004R1	NSP
R11	CHIP TYPE CARBON RESISTOR	RN72K1J-000JE	1	435030004R1	NSP
R13	CHIP TYPE CARBON RESISTOR	RN72K1J-000JE	1	435030004R1	NSP
R14	CHIP TYPE CARBON RESISTOR	RN72K1J-000JE	1	435030004R1	NSP
R2	CHIP TYPE CARBON RESISTOR	RN72K1J-101JE	1	435031014R1	NSP
R21	CHIP TYPE CARBON RESISTOR	RN72K2E-000JE	1	435220004R1	NSP
R22	CHIP TYPE CARBON RESISTOR	RN72K2E-000JE	1	435220004R1	NSP
R3	EMI SUPPRESSION FILTER	BK1608HS601-T	1	230984R1	NSP
R4	EMI SUPPRESSION FILTER	BK1608HS601-T	1	230984R1	NSP
R5	CHIP TYPE CARBON RESISTOR	RN72K1J-103JE	1	435031034R1	NSP
R6	CHIP TYPE CARBON RESISTOR	RN72K1J-472JE	1	435034724R1	NSP
R7	CHIP TYPE CARBON RESISTOR	RN72K1J-472JE	1	435034724R1	NSP
R7502	CHIP TYPE CARBON RESISTOR	RN72K1J-221JE	1	435032214R1	NSP
R7503	CHIP TYPE CARBON RESISTOR	RN72K1J-181JE	1	435031814R1	NSP

R7504	CHIP TYPE CARBON RESISTOR	RN72K1J-181JE	1	435031814R1	NSP
R7505	CHIP TYPE CARBON RESISTOR	RN72K1J-181JE	1	435031814R1	NSP
R7506	CHIP TYPE CARBON RESISTOR	RN72K1J-181JE	1	435031814R1	NSP
R7507	CHIP TYPE CARBON RESISTOR	RN72K1J-181JE	1	435031814R1	NSP
R7508	CHIP TYPE CARBON RESISTOR	RN72K1J-181JE	1	435031814R1	NSP
R7601	CHIP TYPE CARBON RESISTOR	RN72K1J-271JE	1	435032714R1	NSP
R7602	CHIP TYPE CARBON RESISTOR	RN72K1J-331JE	1	435033314R1	NSP
R7603	CHIP TYPE CARBON RESISTOR	RN72K1J-471JE	1	435034714R1	NSP
R7604	CHIP TYPE CARBON RESISTOR	RN72K1J-561JE	1	435035614R1	NSP
R7605	CHIP TYPE CARBON RESISTOR	RN72K1J-821JE	1	435038214R1	NSP
R7606	CHIP TYPE CARBON RESISTOR	RN72K1J-122JE	1	435031224R1	NSP
R7607	CHIP TYPE CARBON RESISTOR	RN72K1J-222JE	1	435032224R1	NSP
R7608	CHIP TYPE CARBON RESISTOR	RN72K1J-392JE	1	435033924R1	NSP
R7609	CHIP TYPE CARBON RESISTOR	RN72K1J-123JE	1	435031234R1	NSP
R7611	CHIP TYPE CARBON RESISTOR	RN72K1J-271JE	1	435032714R1	NSP
R7612	CHIP TYPE CARBON RESISTOR	RN72K1J-331JE	1	435033314R1	NSP
R7613	CHIP TYPE CARBON RESISTOR	RN72K1J-471JE	1	435034714R1	NSP
R7614	CHIP TYPE CARBON RESISTOR	RN72K1J-561JE	1	435035614R1	NSP
R7615	CHIP TYPE CARBON RESISTOR	RN72K1J-821JE	1	435038214R1	NSP
R7616	CHIP TYPE CARBON RESISTOR	RN72K1J-122JE	1	435031224R1	NSP
R7617	CHIP TYPE CARBON RESISTOR	RN72K1J-222JE	1	435032224R1	NSP
R7618	CHIP TYPE CARBON RESISTOR	RN72K1J-392JE	1	435033924R1	NSP
R7619	CHIP TYPE CARBON RESISTOR	RN72K1J-123JE	1	435031234R1	NSP
R7621	CHIP TYPE CARBON RESISTOR	RN72K1J-271JE	1	435032714R1	NSP
R7622	CHIP TYPE CARBON RESISTOR	RN72K1J-331JE	1	435033314R1	NSP
R7623	CHIP TYPE CARBON RESISTOR	RN72K1J-471JE	1	435034714R1	NSP
R7624	CHIP TYPE CARBON RESISTOR	RN72K1J-561JE	1	435035614R1	NSP
R7625	CHIP TYPE CARBON RESISTOR	RN72K1J-821JE	1	435038214R1	NSP
R7626	CHIP TYPE CARBON RESISTOR	RN72K1J-122JE	1	435031224R1	NSP
R7627	CHIP TYPE CARBON RESISTOR	RN72K1J-222JE	1	435032224R1	NSP
R7628	CHIP TYPE CARBON RESISTOR	RN72K1J-392JE	1	435033924R1	NSP
R7629	CHIP TYPE CARBON RESISTOR	RN72K1J-123JE	1	435031234R1	NSP
R7631	CHIP TYPE CARBON RESISTOR	RN72K1J-271JE	1	435032714R1	NSP
R7632	CHIP TYPE CARBON RESISTOR	RN72K1J-331JE	1	435033314R1	NSP
R7633	CHIP TYPE CARBON RESISTOR	RN72K1J-471JE	1	435034714R1	NSP
R7634	CHIP TYPE CARBON RESISTOR	RN72K1J-561JE	1	435035614R1	NSP
R7635	CHIP TYPE CARBON RESISTOR	RN72K1J-821JE	1	435038214R1	NSP
R7740	CHIP TYPE CARBON RESISTOR	RN72K1J-103JE	1	435031034R1	NSP
R7741	CHIP TYPE CARBON RESISTOR	RN72K1J-103JE	1	435031034R1	NSP
R7742	CHIP TYPE CARBON RESISTOR	RN72K1J-103JE	1	435031034R1	NSP
R7743	CHIP TYPE CARBON RESISTOR	RN72K1J-103JE	1	435031034R1	NSP
R7750	CHIP TYPE CARBON RESISTOR	RN72K1J-102JE	1	435031024R1	NSP
R7751	CHIP TYPE CARBON RESISTOR	RN72K1J-392JE	1	435033924R1	NSP
R7770	CHIP TYPE CARBON RESISTOR	RN72K1J-103JE	1	435031034R1	NSP
R7771	CHIP TYPE CARBON RESISTOR	RN72K1J-103JE	1	435031034R1	NSP
R7772	CHIP TYPE CARBON RESISTOR	RN72K1J-103JE	1	435031034R1	NSP
R7773	CHIP TYPE CARBON RESISTOR	RN72K1J-103JE	1	435031034R1	NSP
R7774	CHIP TYPE CARBON RESISTOR	RN72K1J-103JE	1	435031034R1	NSP
R7775	CHIP TYPE CARBON RESISTOR	RN72K1J-103JE	1	435031034R1	NSP
R7776	CHIP TYPE CARBON RESISTOR	RN72K1J-103JE	1	435031034R1	NSP
R7777	CHIP TYPE CARBON RESISTOR	RN72K1J-103JE	1	435031034R1	NSP
R7780	CHIP TYPE CARBON RESISTOR	RN72K1J-101JE	1	435031014R1	NSP
R7781	CHIP TYPE CARBON RESISTOR	RN72K1J-222JE	1	435032224R1	NSP
R7850	CHIP TYPE CARBON RESISTOR	RN72K1J-221JE	1	435032214R1	NSP
R7851	CHIP TYPE CARBON RESISTOR	RN72K1J-472JE	1	435034724R1	NSP

R7852	CHIP TYPE CARBON RESISTOR	RN72K1J-473JE	1	435034734R1		NSP
R7854	CHIP TYPE CARBON RESISTOR	RN72K1J-102JE	1	435031024R1		NSP
R7855	CHIP TYPE CARBON RESISTOR	RN72K1J-333JE	1	435033334R1		NSP
R7856	CHIP TYPE CARBON RESISTOR	RN72K1J-471JE	1	435034714R1		NSP
R7858	CHIP TYPE CARBON RESISTOR	RN72K1J-224JE	1	435032244R1		NSP
R7859	CHIP TYPE CARBON RESISTOR	RN72K1J-223JE	1	435032234R1		NSP
R7880	METAL OXIDE FILM RESISTOR	RS1/2WBJ-330	1	443523314T		NSP
R7881	METAL OXIDE FILM RESISTOR	RS1/2WBJ-330	1	443523314T		NSP
R7900	METAL RESISTOR	RNU1/2WCJ-8.2	1	453530824T		NSP
R7901	CHIP TYPE CARBON RESISTOR	RN72K1J-272JE	1	435032724R1		NSP
R7902	CHIP TYPE CARBON RESISTOR	RN72K1J-272JE	1	435032724R1		NSP
R7903	CHIP TYPE CARBON RESISTOR	RN72K1J-010JE	1	435030104R1		NSP
R7904	CHIP TYPE CARBON RESISTOR	RN72K1J-333JE	1	435033334R1		NSP
R7905	CHIP TYPE CARBON RESISTOR	RN72K2E-221JE	1	435222214R1		NSP
R7906	CHIP TYPE CARBON RESISTOR	RN72K1J-473JE	1	435034734R1		NSP
R7907	CHIP TYPE CARBON RESISTOR	RN72K1J-103JE	1	435031034R1		NSP
R7908	CHIP TYPE CARBON RESISTOR	RN72K1J-103JE	1	435031034R1		NSP
R7909	CHIP TYPE CARBON RESISTOR	RN72K1J-224JE	1	435032244R1		NSP
R7910	NON-FLAMMABLE CARBON FILM RESISTO	R25J-10	1	415471004T		
R7911	CHIP TYPE CARBON RESISTOR	RN72K1J-393JE	1	435033934R1		NSP
R7912	CHIP TYPE CARBON RESISTOR	RN72K1J-104JE	1	435031044R1		NSP
R7913	CHIP TYPE CARBON RESISTOR	RN72K1J-101JE	1	435031014R1		NSP
R7914	NON-FLAMMABLE CARBON FILM RESISTO	R25J-10	1	415471004T		
R7915	CHIP TYPE CARBON RESISTOR	RN72K1J-393JE	1	435033934R1		NSP
R7916	CHIP TYPE CARBON RESISTOR	RN72K1J-104JE	1	435031044R1		NSP
R7917	CHIP TYPE CARBON RESISTOR	RN72K1J-101JE	1	435031014R1		NSP
R7918	CHIP TYPE CARBON RESISTOR	RN72K1J-393JE	1	435033934R1		NSP
R7919	CHIP TYPE CARBON RESISTOR	RN72K2E-221JE	1	435222214R1		NSP
R7920	CHIP TYPE CARBON RESISTOR	RN72K1J-221JE	1	435032214R1		NSP
R7921	CHIP TYPE CARBON RESISTOR	RN72K1J-221JE	1	435032214R1		NSP
R7922	CHIP TYPE CARBON RESISTOR	RN72K1J-332JE	1	435033324R1		NSP
R7923	CHIP TYPE CARBON RESISTOR	RN72K1J-332JE	1	435033324R1		NSP
R7924	CHIP TYPE CARBON RESISTOR	RN72K1J-000JE	1	435030004R1		NSP
R8	CHIP TYPE CARBON RESISTOR	RN72K1J-101JE	1	435031014R1		NSP
R9	CHIP TYPE CARBON RESISTOR	RN72K1J-101JE	1	435031014R1		NSP
[Switches, Terminals, Wires]						
J7500	CHIP TYPE CARBON RESISTOR	RN72K1J-000JE	1	435030004R1		NSP
P1	TERMINAL	NTM-1PDSC437	1	25060515		
P101A	SOCKET	NSCT-7P2100	1	25052203		NSP
P130	PRINTED WIRING BOARD	BCDIS-1990	1	25141990		NSP
P130B	PRINTED WIRING BOARD	BCSW-1991	{1}	25141991	**N**	NSP
P130C	PRINTED WIRING BOARD	BCSW-1992	{1}	25141992	**N**	NSP
P130D	PRINTED WIRING BOARD	BCSW-1993	{1}	25141993	**N**	NSP
P130E	PRINTED WIRING BOARD	BCETC-1994	{1}	25141994	**N**	NSP
P130F	PRINTED WIRING BOARD	BCRF-1995	{1}	25141995	**N**	NSP
P130G	PRINTED WIRING BOARD	BCETC-1996	{1}	25141996	**N**	NSP
P130H	PRINTED WIRING BOARD	BCETC-1997	{1}	25141997	**N**	NSP
P130I	PRINTED WIRING BOARD	BCPS-1998	{1}	25141998	**N**	NSP
P130J	PRINTED WIRING BOARD	BCSW-1982	{1}	25141982	**N**	NSP
P130K	PRINTED WIRING BOARD	BCETC-2007	{1}	25142007	**N**	NSP
P2	TERMINAL	NTM-2PDML439	1	25060517		
P7001B	SOCKET	9615S-31C-PP	1	25053319		NSP
P7590A	WIRE HOL	CHD-1.5-7	1	25053537		NSP
P7590Aor	WIRE HOL	NSCT-7P878	(1)	25051091		NSP
P7590B	WIRE HOL	CHD-1.5-7	1	25053537		NSP

P7590Bor	WIRE HOL	NSCT-7P878	(1)	25051091	NSP
P7591A	WIRE HOL	CHD-1.5-11	1	25053539	NSP
P7591Aor	WIRE HOL	NSCT-11P882	(1)	25051095	NSP
P7591B	WIRE HOL	CHD-1.5-11	1	25053539	NSP
P7591Bor	WIRE HOL	NSCT-11P882	(1)	25051095	NSP
P7592A	WIRE HOL	CHD-1.5-3	1	25053535	NSP
P7592Aor	WIRE HOL	NSCT-3P874	(1)	25051087	NSP
P7592B	WIRE HOL	CHD-1.5-3	1	25053535	NSP
P7592Bor	WIRE HOL	NSCT-3P874	(1)	25051087	NSP
P7593	WIRE HARNESS ASSEMBLY	NSAS-7P2125	1	2009991314UL	NSP
P7593A	WIRE HOL	CHD-1.5-7	1	25053537	NSP
P7593Aor	WIRE HOL	NSCT-7P878	(1)	25051091	NSP
P7593B	PLUG	NPLG-7P354	1	25055371	NSP
P7850	ST JACK	MSJ-035-12APCAG	1	25046035	
P7851A	WIRE HOL	CHD-1.5-3	1	25053535	NSP
P7851B	WIRE HOL	CHD-1.5-3	1	25053535	NSP
P7880A	PLUG	NPLG-5P220	1	25055236	NSP
P7881	ST JACK	MSJ-064-05A SR	1	25045783	
P7900	PLUG	NPLG-5P119	1	25055135	NSP
P7990	WIRE HARNESS ASSEMBLY	NSAS-5P2112	1	2009991301UL	NSP
P7990A	WIRE HOL	CHD-1.5-5	1	25053536	NSP
P7990Aor	WIRE HOL	NSCT-5P876	(1)	25051089	NSP
P7990B	PLUG	NPLG-5P133	1	25055149	NSP
P8502A	CRIMP CORD ASSEMBLY	CRIMP AS	1	2061943081UL	NSP
S7601	PUSH SWITCH	NPS-111-S681	1	25035718T	NSP
S7601or	PUSH SWITCH	NPS-111-S677	(1)	25035714T	NSP
S7602	PUSH SWITCH	NPS-111-S681	1	25035718T	NSP
S7602or	PUSH SWITCH	NPS-111-S677	(1)	25035714T	NSP
S7603	PUSH SWITCH	NPS-111-S681	1	25035718T	NSP
S7603or	PUSH SWITCH	NPS-111-S677	(1)	25035714T	NSP
S7604	PUSH SWITCH	NPS-111-S681	1	25035718T	NSP
S7604or	PUSH SWITCH	NPS-111-S677	(1)	25035714T	NSP
S7605	PUSH SWITCH	NPS-111-S681	1	25035718T	NSP
S7605or	PUSH SWITCH	NPS-111-S677	(1)	25035714T	NSP
S7606	PUSH SWITCH	NPS-111-S681	1	25035718T	NSP
S7606or	PUSH SWITCH	NPS-111-S677	(1)	25035714T	NSP
S7607	PUSH SWITCH	NPS-111-S681	1	25035718T	NSP
S7607or	PUSH SWITCH	NPS-111-S677	(1)	25035714T	NSP
S7608	PUSH SWITCH	NPS-111-S681	1	25035718T	NSP
S7608or	PUSH SWITCH	NPS-111-S677	(1)	25035714T	NSP
S7609	PUSH SWITCH	NPS-111-S681	1	25035718T	NSP
S7609or	PUSH SWITCH	NPS-111-S677	(1)	25035714T	NSP
S7610	PUSH SWITCH	NPS-111-S681	1	25035718T	NSP
S7610or	PUSH SWITCH	NPS-111-S677	(1)	25035714T	NSP
S7611	PUSH SWITCH	NPS-111-S681	1	25035718T	NSP
S7611or	PUSH SWITCH	NPS-111-S677	(1)	25035714T	NSP
S7612	PUSH SWITCH	NPS-111-S681	1	25035718T	NSP
S7612or	PUSH SWITCH	NPS-111-S677	(1)	25035714T	NSP
S7613	PUSH SWITCH	NPS-111-S681	1	25035718T	NSP
S7613or	PUSH SWITCH	NPS-111-S677	(1)	25035714T	NSP
S7614	PUSH SWITCH	NPS-111-S681	1	25035718T	NSP
S7614or	PUSH SWITCH	NPS-111-S677	(1)	25035714T	NSP
S7615	PUSH SWITCH	NPS-111-S681	1	25035718T	NSP
S7615or	PUSH SWITCH	NPS-111-S677	(1)	25035714T	NSP
S7616	PUSH SWITCH	NPS-111-S681	1	25035718T	NSP

S7616or	PUSH SWITCH	NPS-111-S677	(1)	25035714T	NSP
S7617	PUSH SWITCH	NPS-111-S681	1	25035718T	NSP
S7617or	PUSH SWITCH	NPS-111-S677	(1)	25035714T	NSP
S7618	PUSH SWITCH	NPS-111-S681	1	25035718T	NSP
S7618or	PUSH SWITCH	NPS-111-S677	(1)	25035714T	NSP
S7619	PUSH SWITCH	NPS-111-S681	1	25035718T	NSP
S7619or	PUSH SWITCH	NPS-111-S677	(1)	25035714T	NSP
S7620	PUSH SWITCH	NPS-111-S681	1	25035718T	NSP
S7620or	PUSH SWITCH	NPS-111-S677	(1)	25035714T	NSP
S7621	PUSH SWITCH	NPS-111-S681	1	25035718T	NSP
S7621or	PUSH SWITCH	NPS-111-S677	(1)	25035714T	NSP
S7622	PUSH SWITCH	NPS-111-S681	1	25035718T	NSP
S7622or	PUSH SWITCH	NPS-111-S677	(1)	25035714T	NSP
S7623	PUSH SWITCH	NPS-111-S681	1	25035718T	NSP
S7623or	PUSH SWITCH	NPS-111-S677	(1)	25035714T	NSP
S7624	PUSH SWITCH	NPS-111-S681	1	25035718T	NSP
S7624or	PUSH SWITCH	NPS-111-S677	(1)	25035714T	NSP
S7625	PUSH SWITCH	NPS-111-S681	1	25035718T	NSP
S7625or	PUSH SWITCH	NPS-111-S677	(1)	25035714T	NSP
S7626	PUSH SWITCH	NPS-111-S681	1	25035718T	NSP
S7626or	PUSH SWITCH	NPS-111-S677	(1)	25035714T	NSP
S7627	PUSH SWITCH	NPS-111-S681	1	25035718T	NSP
S7627or	PUSH SWITCH	NPS-111-S677	(1)	25035714T	NSP
S7628	PUSH SWITCH	NPS-111-S681	1	25035718T	NSP
S7628or	PUSH SWITCH	NPS-111-S677	(1)	25035714T	NSP
S7629	PUSH SWITCH	NPS-111-S681	1	25035718T	NSP
S7629or	PUSH SWITCH	NPS-111-S677	(1)	25035714T	NSP
S7630	PUSH SWITCH	NPS-111-S681	1	25035718T	NSP
S7630or	PUSH SWITCH	NPS-111-S677	(1)	25035714T	NSP
S7631	PUSH SWITCH	NPS-111-S681	1	25035718T	NSP
S7631or	PUSH SWITCH	NPS-111-S677	(1)	25035714T	NSP
S7632	PUSH SWITCH	NPS-111-S681	1	25035718T	NSP
S7632or	PUSH SWITCH	NPS-111-S677	(1)	25035714T	NSP
S7634	PUSH SWITCH	NPS-111-S681	1	25035718T	NSP
S7634or	PUSH SWITCH	NPS-111-S677	(1)	25035714T	NSP
S7635	PUSH SWITCH	NPS-111-S681	1	25035718T	NSP
S7635or	PUSH SWITCH	NPS-111-S677	(1)	25035714T	NSP
S7636	PUSH SWITCH	NPS-111-S681	1	25035718T	NSP
S7636or	PUSH SWITCH	NPS-111-S677	(1)	25035714T	NSP
S7740	ROTARY ENCODER	XREB125(9X11.5)PVB30FINB1	1	25065737	
S7740or	ROTARY ENCODER	EVEHD1F3024B	(1)	25065695W	
S7770	ROTARY ENCODER	XREB12504PVB30FINB1-2-24	1	25065729	
S7774	ROTARY ENCODER	XREB125(9X11.5)PVB30FINB1	1	25065737	
S7774or	ROTARY ENCODER	EVEHD1F3024B	(1)	25065695W	

BAHDM-2038-2A

<Note>

1. Parts marked by "**NSP**" are generally unavailable because they are not in our Master Spare Parts List.
2. The ! mark found on some component parts indicates the importance of the safety factor of the part.
   Therefore, when replacing, be sure to use parts of identical designation.

: NSP

REF. NO.	PART NAME	DESCRIPTION	Q'TY	PART NO. (SN)	REMARKS
[Semi-conductors]					
Q8500	HYBRID IC	TCA9517DGKR	1	22243201R2	NSP
[Transformers, Coils]					
L8505	CORE	BLM15PX181SN1D	1	2350033R1	NSP
[Capacitors]					
C8501	CHIP TYPE CERAMIC CAPACITOR	CK725B1H-102K1	1	332101025R1	NSP
C8502	CHIP TYPE CERAMIC CAPACITOR	CK725B1H-102K1	1	332101025R1	NSP
C8503	CHIP TYPE CERAMIC CAPACITOR	CK725B1C-104K0	1	332011045R1	NSP
C8505	CHIP TYPE CERAMIC CAPACITOR	CK725B1H-103K0	1	332031035R1	NSP
[Resistors]					
R8503	CHIP TYPE CARBON RESISTOR	RN72K1J-473JE	1	435034734R1	NSP
R8504	CHIP TYPE CARBON RESISTOR	RN72K1J-473JE	1	435034734R1	NSP
R8505	CHIP TYPE CARBON RESISTOR	RN72K1J-472JE	1	435034724R1	NSP
R8506	CHIP TYPE CARBON RESISTOR	RN72K1J-472JE	1	435034724R1	NSP
R8507	CHIP TYPE CARBON RESISTOR	RN72K1J-473JE	1	435034734R1	NSP
[Switches, Terminals, Wires]					
P160	PRINTED WIRING BOARD	BCHDM-2038	1	25142038	NSP
P8500	SOCKET	SNN04SBB2200-84R	1	25053613R2	NSP
P8501	SOCKET	SNN15SBA4600-84R	1	25053587R2	NSP
P8502B	TERMINAL	NTM-1P233(M1969)	1	25060302	NSP

BAPRC-2409-1G

<Note>

1. Parts marked by "**NSP**" are generally unavailable because they are not in our Master Spare Parts List.
2. The ! mark found on some component parts indicates the importance of the safety factor of the part.
   Therefore, when replacing, be sure to use parts of identical designation.

: NSP

REF. NO.	PART NAME	DESCRIPTION	Q'TY	PART NO. (SN)	REMARKS
[Semi-conductors]					
D1001	CHIP TYPE DIODE	DA2J10100	1	223303R2	NSP
D1001or	CHIP TYPE DIODE	1SS352	(1)	223234R2	NSP
D1002	CHIP TYPE DIODE	DA2J10100	1	223303R2	NSP
D1002or	CHIP TYPE DIODE	1SS352	(1)	223234R2	NSP
D1003	CHIP TYPE DIODE	DA2J10100	1	223303R2	NSP
D1003or	CHIP TYPE DIODE	1SS352	(1)	223234R2	NSP
D1004	CHIP TYPE DIODE	DA2J10100	1	223303R2	NSP
D1004or	CHIP TYPE DIODE	1SS352	(1)	223234R2	NSP
D3000	CHIP TYPE DIODE	DA2J10100	1	223303R2	NSP
D3000or	CHIP TYPE DIODE	1SS352	(1)	223234R2	NSP
D3001	CHIP TYPE DIODE	DA2J10100	1	223303R2	NSP
D3001or	CHIP TYPE DIODE	1SS352	(1)	223234R2	NSP
D3002	CHIP TYPE DIODE	DA2J10100	1	223303R2	NSP
D3002or	CHIP TYPE DIODE	1SS352	(1)	223234R2	NSP
D3003	CHIP TYPE DIODE	DA2J10100	1	223303R2	NSP
D3003or	CHIP TYPE DIODE	1SS352	(1)	223234R2	NSP
D3004	CHIP TYPE DIODE	DA2J10100	1	223303R2	NSP

D3004or	CHIP TYPE DIODE	1SS352	(1)	223234R2	NSP
D3005	CHIP TYPE DIODE	DA2J10100	1	223303R2	NSP
D3005or	CHIP TYPE DIODE	1SS352	(1)	223234R2	NSP
D3006	CHIP TYPE DIODE	DA2J10100	1	223303R2	NSP
D3006or	CHIP TYPE DIODE	1SS352	(1)	223234R2	NSP
D3007	CHIP TYPE DIODE	DA2J10100	1	223303R2	NSP
D3007or	CHIP TYPE DIODE	1SS352	(1)	223234R2	NSP
D7001	CHIP TYPE DIODE	DA2J10100	1	223303R2	NSP
D7001or	CHIP TYPE DIODE	1SS352	(1)	223234R2	NSP
D7002	CHIP TYPE DIODE	DA2J10100	1	223303R2	NSP
D7002or	CHIP TYPE DIODE	1SS352	(1)	223234R2	NSP
D7003	CHIP TYPE DIODE	DA2J10100	1	223303R2	NSP
D7003or	CHIP TYPE DIODE	1SS352	(1)	223234R2	NSP
D7004	CHIP TYPE DIODE	DA2J10100	1	223303R2	NSP
D7004or	CHIP TYPE DIODE	1SS352	(1)	223234R2	NSP
D7006	DIODE	CUS357	1	223320R2	NSP
D7009	CHIP TYPE DIODE	DA2J10100	1	223303R2	NSP
D7009or	CHIP TYPE DIODE	1SS352	(1)	223234R2	NSP
D8003	ESD	IMSA-6802-01Y901_1608SIZE	1	4000255AR1	NSP
D8900	DIODE	CUS357	1	223320R2	NSP
D8901	DIODE	CUS357	1	223320R2	NSP
D8902	DIODE	CUS357	1	223320R2	NSP
D8907	CHIP TYPE DIODE	DA2J10100	1	223303R2	NSP
D8907or	CHIP TYPE DIODE	1SS352	(1)	223234R2	NSP
D8909	CHIP TYPE DIODE	DA2J10100	1	223303R2	NSP
D8909or	CHIP TYPE DIODE	1SS352	(1)	223234R2	NSP
D8942	CHIP TYPE DIODE	DA2J10100	1	223303R2	NSP
D8942or	CHIP TYPE DIODE	1SS352	(1)	223234R2	NSP
D8943	CHIP TYPE DIODE	DA2J10100	1	223303R2	NSP
D8943or	CHIP TYPE DIODE	1SS352	(1)	223234R2	NSP
D8963	DIODE	RBR3MM30ATR	1	22380401R2	NSP
D8968	CHIP TYPE DIODE	DA2J10100	1	223303R2	NSP
D8968or	CHIP TYPE DIODE	1SS352	(1)	223234R2	NSP
D8969	ZENER DIODE	DZ2J062M0L	1	224760620R2	NSP
Q1001	HYBRID IC	TC7SZU04FU	1	22242512R2TO	NSP
Q1002	HYBRID IC	PCM5101APWR	1	22242855R2	NSP
Q1003	HYBRID IC	PCM9211PTR	1	22242703R2	NSP
Q1004	HYBRID IC	AK4458VN	1	22242927R2	NSP
Q1005	HYBRID IC	PCM9211PTR	1	22242703R2	NSP
Q1007	HYBRID IC	74VHC4040FT	1	22274040E1R2TO	NSP
Q1008	HYBRID IC	TC7WH241FU(TE12L_F)	1	22242076R2TO	NSP
Q1008or	HYBRID IC	SN74LVC2G241DCTR	(1)	22243275R2	NSP
Q1090	HYBRID IC	MM3464A50NRE	1	22243073R2	NSP
Q1091	HYBRID IC	S-1333A33-M5T1U3	1	22242934R2	NSP
Q1092	HYBRID IC	74LCX125FT	1	22274125BR2TO	NSP
Q1093	HYBRID IC	PCM5101APWR	1	22242855R2	NSP
Q1094	HYBRID IC	74LCX125FT	1	22274125BR2TO	NSP
Q1095	TRANSISTOR	KRC404E	1	2216450R2	NSP
Q1095or	TRANSISTOR	DTC044EEBTL	(1)	2218700R2	NSP
Q1097	HYBRID IC	74VHC541FT	1	22274541E1R2TO	NSP
Q1099	TRANSISTOR	KRC404E	1	2216450R2	NSP
Q1099or	TRANSISTOR	DTC044EEBTL	(1)	2218700R2	NSP
Q1102	HYBRID IC	74LCX125FT	1	22274125BR2TO	NSP
Q1103	HYBRID IC	74LCX125FT	1	22274125BR2TO	NSP
Q1104	TRANSISTOR	KRC404E	1	2216450R2	NSP

Q1104or	TRANSISTOR	DTC044EEBTL	(1)	2218700R2	NSP
Q1105	TRANSISTOR	KRC404E	1	2216450R2	NSP
Q1105or	TRANSISTOR	DTC044EEBTL	(1)	2218700R2	NSP
Q3001	HYBRID IC	AM3354BZCZ80	1	22243021R3	NSP
Q3002	HYBRID IC	TC58NVG1S3HTA00B4H	1	222W0155R3	NSP
Q3003	HYBRID IC	NT5CC128M16IP-DI	1	22243076R3	NSP
Q3006	HYBRID IC	PST894A160UR	1	22243226R2	NSP
Q3007	TRANSISTOR	KRC402E	1	2218330R2	NSP
Q3007or	TRANSISTOR	DTC014EEBTL	(1)	2218690R2	NSP
Q3201	HYBRID IC	MFI337S3959	1	22242820R2	NSP
Q3400	HYBRID IC	74LCX125FT	1	22274125BR2TO	NSP
Q3401	HYBRID IC	W25Q64FVSSIG	1	22243270R2	NSP
Q3403	HYBRID IC	TC7SZU04FU	1	22242512R2TO	NSP
Q3404	HYBRID IC	CS49844A-CQZ	1	22242926R3	NSP
Q3406	HYBRID IC	W9864G6KH-7	1	22243269R2	NSP
Q3406or	HYBRID IC	M12L64164A-7TG2Y	(1)	22242951R3	NSP
Q3410	TRANSISTOR	KRC402E	1	2218330R2	NSP
Q3410or	TRANSISTOR	DTC014EEBTL	(1)	2218690R2	NSP
Q3601	HYBRID IC	FP6861C-E1AS5CTR	1	22243273R2	NSP
Q3651	HYBRID IC	KSZ8091RNB	1	22243023R2	NSP
Q3652	HYBRID IC	SN74AUP1T17DCKR	1	222740170R2	NSP
Q3653	HYBRID IC	SN74AUP1T17DCKR	1	222740170R2	NSP
Q3654	HYBRID IC	TC74VCX125FT	1	22274125DR2TO	NSP
Q3667	TRANSISTOR	KRC402E	1	2218330R2	NSP
Q3667or	TRANSISTOR	DTC014EEBTL	(1)	2218690R2	NSP
Q3901	HYBRID IC	TPS65910A31A1RSLR	1	22243022R2	NSP
Q7000	TRANSISTOR	KRA302E	1	2218360R2	NSP
Q7000or	TRANSISTOR	DTA014EEBTL	(1)	2218680R2	NSP
Q7001	HYBRID IC	M95640-WMN6TP	1	22242643R2	NSP
Q7001or	HYBRID IC	BR25S640FJ	(1)	22242761R2	NSP
Q7002	TRANSISTOR	KRA302E	1	2218360R2	NSP
Q7002or	TRANSISTOR	DTA014EEBTL	(1)	2218680R2	NSP
Q7003	TRANSISTOR	KRA302E	1	2218360R2	NSP
Q7003or	TRANSISTOR	DTA014EEBTL	(1)	2218680R2	NSP
Q7004	TRANSISTOR	KRA302E	1	2218360R2	NSP
Q7004or	TRANSISTOR	DTA014EEBTL	(1)	2218680R2	NSP
Q7005	TRANSISTOR	KRC404E	1	2216450R2	NSP
Q7005or	TRANSISTOR	DTC044EEBTL	(1)	2218700R2	NSP
Q7006	TRANSISTOR	KRC404E	1	2216450R2	NSP
Q7006or	TRANSISTOR	DTC044EEBTL	(1)	2218700R2	NSP
Q7007	TRANSISTOR	KRC404E	1	2216450R2	NSP
Q7007or	TRANSISTOR	DTC044EEBTL	(1)	2218700R2	NSP
Q7009	HYBRID IC	MPD70F3477AGJA-GAE-G	1	222W0117R3	NSP
Q7010	TRANSISTOR	KRC404E	1	2216450R2	NSP
Q7010or	TRANSISTOR	DTC044EEBTL	(1)	2218700R2	NSP
Q7011	HYBRID IC	74LCX125FT	1	22274125BR2TO	NSP
Q7013	HYBRID IC	TC7WBL3305CFK	1	22242965R2	NSP
Q7016	TRANSISTOR	2SC2712-GR	1	2213145R2	NSP
Q7017	TRANSISTOR	KRC402E	1	2218330R2	NSP
Q7017or	TRANSISTOR	DTC014EEBTL	(1)	2218690R2	NSP
Q7018	HYBRID IC	S-1333A33-M5T1U3	1	22242934R2	NSP
Q7020	HYBRID IC	PST894A270UR	1	22243198R2	NSP
Q7021	TRANSISTOR	KRA302E	1	2218360R2	NSP
Q7021or	TRANSISTOR	DTA014EEBTL	(1)	2218680R2	NSP
Q7023	TRANSISTOR	KRC404E	1	2216450R2	NSP

Q7023or	TRANSISTOR	DTC044EEBTL	(1)	2218700R2	NSP
Q7027	HYBRID IC	S-1333A33-M5T1U3	1	22242934R2	NSP
Q7028	HYBRID IC	ICL3221ECVZ	1	22242268R2	NSP
Q7029	TRANSISTOR	2SC2712-GR	1	2213145R2	NSP
Q7030	TRANSISTOR	INA5001AP1-T111	1	2218030R2	NSP
Q7030or	TRANSISTOR	KTA1661-Y	(1)	2217864R2	NSP
Q7031	TRANSISTOR	2SA1162-GR	1	2214375R2	NSP
Q7033	TRANSISTOR	KRC405E	1	2218340R2	NSP
Q7033or	TRANSISTOR	DTC023JEBTL	(1)	2218710R2	NSP
Q8003	HYBRID IC	74LCX125FT	1	22274125BR2TO	NSP
Q8004	TRANSISTOR	2SA1162-GR	1	2214375R2	NSP
Q8005	TRANSISTOR	KRC404E	1	2216450R2	NSP
Q8005or	TRANSISTOR	DTC044EEBTL	(1)	2218700R2	NSP
Q8114	HYBRID IC	74LCX125FT	1	22274125BR2TO	NSP
Q8202	HYBRID IC	ADV7180KCP32Z-RL	1	22242763R2	NSP
Q8202or	HYBRID IC	ADV7180KCP32Z	(1)	22242763R3	NSP
Q8203	HYBRID IC	MM3411A18URE	1	22243075R2	NSP
Q8205	HYBRID IC	MM3411A18URE	1	22243075R2	NSP
Q8300	HYBRID IC	MN864788A	1	22242930R3	NSP
Q8301	TRANSISTOR	KRC402E	1	2218330R2	NSP
Q8301or	TRANSISTOR	DTC014EEBTL	(1)	2218690R2	NSP
Q8302	TRANSISTOR	KRC402E	1	2218330R2	NSP
Q8302or	TRANSISTOR	DTC014EEBTL	(1)	2218690R2	NSP
Q8303	TRANSISTOR	KRC402E	1	2218330R2	NSP
Q8303or	TRANSISTOR	DTC014EEBTL	(1)	2218690R2	NSP
Q8304	TRANSISTOR	KRC402E	1	2218330R2	NSP
Q8304or	TRANSISTOR	DTC014EEBTL	(1)	2218690R2	NSP
Q8305	TRANSISTOR	KRC402E	1	2218330R2	NSP
Q8305or	TRANSISTOR	DTC014EEBTL	(1)	2218690R2	NSP
Q8306	TRANSISTOR	KRC402E	1	2218330R2	NSP
Q8306or	TRANSISTOR	DTC014EEBTL	(1)	2218690R2	NSP
Q8307	TRANSISTOR	KRC402E	1	2218330R2	NSP
Q8307or	TRANSISTOR	DTC014EEBTL	(1)	2218690R2	NSP
Q8308	TRANSISTOR	KRC402E	1	2218330R2	NSP
Q8308or	TRANSISTOR	DTC014EEBTL	(1)	2218690R2	NSP
Q8401	HYBRID IC	MN864787	1	22242944R3	NSP
Q8402	HYBRID IC	W25Q64FVSSIG	1	22243270R2	NSP
Q8402or	HYBRID IC	IS25LP064A-JBLE	(1)	222W0160R2	NSP
Q8701	HYBRID IC	TMPM361F10FG	1	222W0115R3	NSP
Q8702	TRANSISTOR	KRC402E	1	2218330R2	NSP
Q8702or	TRANSISTOR	DTC014EEBTL	(1)	2218690R2	NSP
Q8704	TRANSISTOR	KRA302E	1	2218360R2	NSP
Q8704or	TRANSISTOR	DTA014EEBTL	(1)	2218680R2	NSP
Q8705	TRANSISTOR	KRC402E	1	2218330R2	NSP
Q8705or	TRANSISTOR	DTC014EEBTL	(1)	2218690R2	NSP
Q8709	TRANSISTOR	KRC402E	1	2218330R2	NSP
Q8709or	TRANSISTOR	DTC014EEBTL	(1)	2218690R2	NSP
Q8710	TRANSISTOR	KRC402E	1	2218330R2	NSP
Q8710or	TRANSISTOR	DTC014EEBTL	(1)	2218690R2	NSP
Q8712	TRANSISTOR	KRC402E	1	2218330R2	NSP
Q8712or	TRANSISTOR	DTC014EEBTL	(1)	2218690R2	NSP
Q8713	TRANSISTOR	KRC402E	1	2218330R2	NSP
Q8713or	TRANSISTOR	DTC014EEBTL	(1)	2218690R2	NSP
Q8715	TRANSISTOR	KRA302E	1	2218360R2	NSP
Q8715or	TRANSISTOR	DTA014EEBTL	(1)	2218680R2	NSP

Q8716	TRANSISTOR	KRC402E	1	2218330R2	NSP
Q8716or	TRANSISTOR	DTC014EEBTL	(1)	2218690R2	NSP
Q8725	TRANSISTOR	KRC402E	1	2218330R2	NSP
Q8725or	TRANSISTOR	DTC014EEBTL	(1)	2218690R2	NSP
Q8727	TRANSISTOR	KRC402E	1	2218330R2	NSP
Q8727or	TRANSISTOR	DTC014EEBTL	(1)	2218690R2	NSP
Q8729	TRANSISTOR	KRC402E	1	2218330R2	NSP
Q8729or	TRANSISTOR	DTC014EEBTL	(1)	2218690R2	NSP
Q8730	TRANSISTOR	KRC402E	1	2218330R2	NSP
Q8730or	TRANSISTOR	DTC014EEBTL	(1)	2218690R2	NSP
Q8731	TRANSISTOR	KRC402E	1	2218330R2	NSP
Q8731or	TRANSISTOR	DTC014EEBTL	(1)	2218690R2	NSP
Q8732	TRANSISTOR	KRC402E	1	2218330R2	NSP
Q8732or	TRANSISTOR	DTC014EEBTL	(1)	2218690R2	NSP
Q8733	TRANSISTOR	KRC402E	1	2218330R2	NSP
Q8733or	TRANSISTOR	DTC014EEBTL	(1)	2218690R2	NSP
Q8900	HYBRID IC	FP6861C-E1AS5CTR	1	22243273R2	NSP
Q8907	HYBRID IC	MM3464A50NRE	1	22243073R2	NSP
Q8921	HYBRID IC	FR9888CSPCTR	1	22242839R2	NSP
Q8931	HYBRID IC	FR9888CSPCTR	1	22242839R2	NSP
Q8946	HYBRID IC	TPS22924CYZPR	1	22242807R2	NSP
Q8951	HYBRID IC	FR9888CSPCTR	1	22242839R2	NSP
Q8952	TRANSISTOR	2SC2712-GR	1	2213145R2	NSP
Q8961	HYBRID IC	FR9889SPCTR	1	22243033R2	NSP
Q8965	HYBRID IC	MM3464A50NRE	1	22243073R2	NSP
Q8967	HYBRID IC	FP6861C-E1AS5CTR	1	22243273R2	NSP
X1001	CRYSTAL	HC-49S 9C22.5792M	1	3010535R2	NSP
X3001	CRYSTAL	HC-49S 9C24.0000M	1	3010515R2	NSP
X3002	CRYSTAL	FC-135 -32.768K	1	3010532R2	NSP
X3401	CRYSTAL	HC-49S 9C24.5760M	1	3010516R2	NSP
X3651	CRYSTAL	HC-49S 9C25.0000M	1	3010517R2	NSP
X7001	CRYSTAL	CSTCR4M00G53-R0	1	3010536R2	NSP
X8201	CRYSTAL	HC-49S 9C28.6363M	1	3010519R2	NSP
X8300	CRYSTAL	HC-49S 9C27.0000M	1	3010518R2	NSP
X8400	CRYSTAL	HC-49S 9C27.0000M	1	3010518R2	NSP
X8701	CERAMIC RESONATOR	CSTCE8M00G55-R0	1	3010416R2	NSP
[Transformers, Coils]					
L1000	CORE	BLM15PX181SN1D	1	2350033R1	NSP
L1001	CORE	BLM15PX181SN1D	1	2350033R1	NSP
L1004	CORE	BK1005LL241-T	1	2350032R1	NSP
L1005	CORE	BK1005LL241-T	1	2350032R1	NSP
L1006	CORE	BK1005LL241-T	1	2350032R1	NSP
L1007	CORE	BK1005LL241-T	1	2350032R1	NSP
L1009	CHOKE COIL	LBC2518T4R7M	1	231364M047R2	NSP
L1010	CHOKE COIL	LBC2518T4R7M	1	231364M047R2	NSP
L1011	CHOKE COIL	LBC2518T4R7M	1	231364M047R2	NSP
L1012	CHOKE COIL	LBC2518T4R7M	1	231364M047R2	NSP
L1013	CHOKE COIL	LBC2518T4R7M	1	231364M047R2	NSP
L1014	CORE	BK1005LL241-T	1	2350032R1	NSP
L1018	CORE	BLM15PX181SN1D	1	2350033R1	NSP
L1019	CORE	BLM15PX181SN1D	1	2350033R1	NSP
L1021	CORE	BK1005LL241-T	1	2350032R1	NSP
L1022	CHOKE COIL	LBC2518T4R7M	1	231364M047R2	NSP
L1024	CORE	BK1005LL241-T	1	2350032R1	NSP
L1025	CORE	BLM15PX181SN1D	1	2350033R1	NSP

L1026	CORE	BLM15PX181SN1D	1	2350033R1	NSP
L1027	CORE	BK1005LL241-T	1	2350032R1	NSP
L1029	CORE	BK1005LL241-T	1	2350032R1	NSP
L3001	CORE	BLM15PX121SN1D	1	2350034R1	NSP
L3007	CHOKE COIL	LBC2518T4R7M	1	231364M047R2	NSP
L3201	CORE	BK1005LL241-T	1	2350032R1	NSP
L3202	CORE	BK1005LL241-T	1	2350032R1	NSP
L3401	CORE	BLM15PX181SN1D	1	2350033R1	NSP
L3402	CORE	BLM15PX181SN1D	1	2350033R1	NSP
L3403	CORE	BK1005LL241-T	1	2350032R1	NSP
L3405	CORE	BLM15PX121SN1D	1	2350034R1	NSP
L3406	CORE	BLM15PX330SN1D	1	2350043R1	NSP
L3407	CORE	BLM15PX121SN1D	1	2350034R1	NSP
L3408	CORE	BLM15PX121SN1D	1	2350034R1	NSP
L3409	CORE	BLM15PX181SN1D	1	2350033R1	NSP
L3411	CORE	BK1005LL241-T	1	2350032R1	NSP
L3601	CORE	BLM15PX121SN1D	1	2350034R1	NSP
L3602	CORE	BLM15PX121SN1D	1	2350034R1	NSP
L3611	CORE	MCF12102G900-T	1	2350041R2	NSP
L3613	CORE	MCF20104G900-T	1	2350040R2	NSP
L3651	CORE	BLM15PX121SN1D	1	2350034R1	NSP
L3652	CORE	BLM15PX121SN1D	1	2350034R1	NSP
L3655	CORE	BLM15PX121SN1D	1	2350034R1	NSP
L3656	CORE	BLM15PX121SN1D	1	2350034R1	NSP
L3661	CORE	BLM15PX121SN1D	1	2350034R1	NSP
L3901	CHOKE COIL	NRS4018T2R2MDGJ	1	231494R2	NSP
L3902	CHOKE COIL	NRS4018T2R2MDGJ	1	231494R2	NSP
L3903	CHOKE COIL	NRS4018T2R2MDGJ	1	231494R2	NSP
L3904	CORE	BLM15PX121SN1D	1	2350034R1	NSP
L3905	CORE	BLM15PX121SN1D	1	2350034R1	NSP
L3906	CORE	BLM15PX121SN1D	1	2350034R1	NSP
L3907	CORE	BLM15PX121SN1D	1	2350034R1	NSP
L3909	CORE	BLM15PX121SN1D	1	2350034R1	NSP
L3910	CORE	BLM15PX121SN1D	1	2350034R1	NSP
L3911	CORE	BLM15PX121SN1D	1	2350034R1	NSP
L7000	CORE	BLM15PX181SN1D	1	2350033R1	NSP
L7003	CORE	BLM15PX181SN1D	1	2350033R1	NSP
L7007	CORE	BLM15PX181SN1D	1	2350033R1	NSP
L7008	CORE	BLM15PX181SN1D	1	2350033R1	NSP
L7009	CORE	BLM15PX181SN1D	1	2350033R1	NSP
L8001	CORE	EXC24CH900U	1	2350039R2	NSP
L8002	CORE	EXC24CH900U	1	2350039R2	NSP
L8003	CORE	EXC24CH900U	1	2350039R2	NSP
L8004	CORE	EXC24CH900U	1	2350039R2	NSP
L8021	CORE	EXC24CH900U	1	2350039R2	NSP
L8022	CORE	EXC24CH900U	1	2350039R2	NSP
L8023	CORE	EXC24CH900U	1	2350039R2	NSP
L8024	CORE	EXC24CH900U	1	2350039R2	NSP
L8202	CORE	BLM15PX181SN1D	1	2350033R1	NSP
L8205	CORE	BLM15PX181SN1D	1	2350033R1	NSP
L8207	CORE	BLM15PX181SN1D	1	2350033R1	NSP
L8210	CORE	BLM15PX181SN1D	1	2350033R1	NSP
L8301	CORE	BLM15PX121SN1D	1	2350034R1	NSP
L8302	CORE	BLM15PX121SN1D	1	2350034R1	NSP
L8303	CORE	BLM15PX121SN1D	1	2350034R1	NSP

L8304	CORE	BLM15PX121SN1D	1	2350034R1	NSP
L8305	CORE	BLM15PX121SN1D	1	2350034R1	NSP
L8306	CORE	BLM15PX121SN1D	1	2350034R1	NSP
L8307	CORE	BLM15PX121SN1D	1	2350034R1	NSP
L8308	CORE	BLM15PX121SN1D	1	2350034R1	NSP
L8310	CORE	BLM15PX121SN1D	1	2350034R1	NSP
L8311	CORE	BLM15PX121SN1D	1	2350034R1	NSP
L8312	CORE	BLM15PX121SN1D	1	2350034R1	NSP
L8313	CORE	BLM15PX121SN1D	1	2350034R1	NSP
L8314	CORE	BLM15PX121SN1D	1	2350034R1	NSP
L8315	CORE	BLM15PX121SN1D	1	2350034R1	NSP
L8316	CORE	BLM15PX121SN1D	1	2350034R1	NSP
L8400	CORE	BLM15PX121SN1D	1	2350034R1	NSP
L8401	CORE	BLM15PX121SN1D	1	2350034R1	NSP
L8402	CORE	BLM15PX121SN1D	1	2350034R1	NSP
L8403	CORE	BLM15PX121SN1D	1	2350034R1	NSP
L8404	CORE	BLM15PX121SN1D	1	2350034R1	NSP
L8405	CORE	BLM15PX121SN1D	1	2350034R1	NSP
L8406	CORE	BLM15PX121SN1D	1	2350034R1	NSP
L8407	CORE	BLM15PX121SN1D	1	2350034R1	NSP
L8408	CORE	BLM15PX121SN1D	1	2350034R1	NSP
L8409	CORE	BLM15PX121SN1D	1	2350034R1	NSP
L8410	CORE	BLM15PX121SN1D	1	2350034R1	NSP
L8411	CORE	BLM15PX121SN1D	1	2350034R1	NSP
L8412	CORE	BLM15PX121SN1D	1	2350034R1	NSP
L8413	CORE	BLM15PX121SN1D	1	2350034R1	NSP
L8414	CORE	BLM15PX181SN1D	1	2350033R1	NSP
L8415	CORE	BLM15PX121SN1D	1	2350034R1	NSP
L8416	CORE	BK1005LL241-T	1	2350032R1	NSP
L8417	CORE	BLM15PX181SN1D	1	2350033R1	NSP
L8702	CORE	BLM15PX181SN1D	1	2350033R1	NSP
L8921	CHOKE COIL	BLM21PG221SN1	1	230949R2	NSP
L8922	CHOKE COIL	1255AS-100M	1	231482M100R2	NSP
L8923	CHOKE COIL	BLM21PG221SN1	1	230949R2	NSP
L8924	CHOKE COIL	BLM21PG221SN1	1	230949R2	NSP
L8931	CHOKE COIL	BLM21PG221SN1	1	230949R2	NSP
L8932	CHOKE COIL	1255AS-100M	1	231482M100R2	NSP
L8951	CHOKE COIL	BLM21PG221SN1	1	230949R2	NSP
L8952	CHOKE COIL	1255AS-100M	1	231482M100R2	NSP
L8953	CHOKE COIL	BLM21PG221SN1	1	230949R2	NSP
L8954	CHOKE COIL	BLM21PG221SN1	1	230949R2	NSP
L8961	CHOKE COIL	BLM21PG221SN1	1	230949R2	NSP
L8962	CHOKE COIL	1255AS-100M	1	231482M100R2	NSP
L8965	CORE	BLM15PX181SN1D	1	2350033R1	NSP
[Capacitors]					
C1001	CHIP TYPE CERAMIC CAPACITOR	CK725B1C-104K0	1	332011045R1	NSP
C1002	CHIP TYPE CERAMIC CAPACITOR	CK725B1H-104K1	1	332101045R1	NSP
C1004	CHIP TYPE CERAMIC CAPACITOR	CK725B1H-104K1	1	332101045R1	NSP
C1005	CHIP ELECT C	CECS16V-100M	1	398641017R2	NSP
C1005or	CHIP ELECT C	CEWX16V-100M	(1)	398141017R2	NSP
C1006	CHIP TYPE CERAMIC CAPACITOR	CK725B1H-104K1	1	332101045R1	NSP
C1008	CHIP TYPE CERAMIC CAPACITOR	CC725CH1H-180J0	1	342031804R1	NSP
C1009	CHIP TYPE CERAMIC CAPACITOR	CC725CH1H-150J0	1	342031504R1	NSP
C1010	CHIP TYPE CERAMIC CAPACITOR	CK725B1H-104K1	1	332101045R1	NSP
C1011	CHIP TYPE CERAMIC CAPACITOR	CK725B1C-104K0	1	332011045R1	NSP

C1012	CHIP ELECT C	CECS4V-220M	1	3986G2217R2	NSP
C1012or	CHIP ELECT C	CEWX4V-220M	(1)	3981G2217R2	NSP
C1013	CHIP TYPE CERAMIC CAPACITOR	CK725B1C-104K0	1	332011045R1	NSP
C1014	CHIP TYPE CERAMIC CAPACITOR	CK725B1C-104K0	1	332011045R1	NSP
C1015	CHIP TYPE CERAMIC CAPACITOR	CK725B1C-104K0	1	332011045R1	NSP
C1016	CHIP TYPE CERAMIC CAPACITOR	CK725B1H-104K1	1	332101045R1	NSP
C1017	CHIP ELECT C	CECS16V-100M	1	398641017R2	NSP
C1017or	CHIP ELECT C	CEWX16V-100M	(1)	398141017R2	NSP
C1018	CHIP TYPE CERAMIC CAPACITOR	CK725B1C-104K0	1	332011045R1	NSP
C1019	CHIP TYPE CERAMIC CAPACITOR	CK732B16V-106K	1	332071065R2	NSP
C1020	CHIP ELECT C	CECS4V-220M	1	3986G2217R2	NSP
C1020or	CHIP ELECT C	CEWX4V-220M	(1)	3981G2217R2	NSP
C1021	CHIP TYPE CERAMIC CAPACITOR	CK725B1H-472K0	1	332034725R1	NSP
C1022	CHIP ELECT C	CE32W16V-47M(EC-PC)	1	3500238R2	NSP
C1023	CHIP ELECT C	CECS16V-100M	1	398641017R2	NSP
C1023or	CHIP ELECT C	CEWX16V-100M	(1)	398141017R2	NSP
C1024	CHIP TYPE CERAMIC CAPACITOR	CK732B16V-106K	1	332071065R2	NSP
C1025	CHIP TYPE CERAMIC CAPACITOR	CK725B1H-223K0	1	332032235R1	NSP
C1026	CHIP TYPE CERAMIC CAPACITOR	CK725B1E-473K0	1	332024735R1	NSP
C1027	CHIP ELECT C	CECS4V-220M	1	3986G2217R2	NSP
C1027or	CHIP ELECT C	CEWX4V-220M	(1)	3981G2217R2	NSP
C1030	CHIP TYPE CERAMIC CAPACITOR	CK732B16V-106K	1	332071065R2	NSP
C1032	CHIP TYPE CERAMIC CAPACITOR	CK725B1A-105K0	1	332001055R1	NSP
C1033	CHIP TYPE CERAMIC CAPACITOR	CK725B1A-105K0	1	332001055R1	NSP
C1037	CHIP TYPE CERAMIC CAPACITOR	CK732B16V-106K	1	332071065R2	NSP
C1038	CHIP TYPE CERAMIC CAPACITOR	CC725CH1H-331J0	1	342033314R1	NSP
C1040	CHIP TYPE CERAMIC CAPACITOR	CK725B1H-472K0	1	332034725R1	NSP
C1051	CHIP TYPE CERAMIC CAPACITOR	CK725B1C-104K0	1	332011045R1	NSP
C1052	CHIP TYPE CERAMIC CAPACITOR	CK725B1C-104K0	1	332011045R1	NSP
C1053	CHIP TYPE CERAMIC CAPACITOR	CK725B1C-104K0	1	332011045R1	NSP
C1054	CHIP TYPE CERAMIC CAPACITOR	CK725B1A-225K1	1	332132255R1	NSP
C1055	CHIP TYPE CERAMIC CAPACITOR	CK725B1A-225K1	1	332132255R1	NSP
C1056	CHIP TYPE CERAMIC CAPACITOR	CK725B1C-104K0	1	332011045R1	NSP
C1057	CHIP TYPE CERAMIC CAPACITOR	CK732B16V-106K	1	332071065R2	NSP
C1058	CHIP TYPE CERAMIC CAPACITOR	CK725B1H-103K0	1	332031035R1	NSP
C1059	CHIP TYPE CERAMIC CAPACITOR	CK725B1H-103K0	1	332031035R1	NSP
C1062	CHIP TYPE CERAMIC CAPACITOR	CK725B1H-223K0	1	332032235R1	NSP
C1063	CHIP TYPE CERAMIC CAPACITOR	CK725B1E-473K0	1	332024735R1	NSP
C1068	CHIP TYPE CERAMIC CAPACITOR	CK725B1C-104K0	1	332011045R1	NSP
C1069	CHIP TYPE CERAMIC CAPACITOR	CK725B1C-104K0	1	332011045R1	NSP
C1071	CHIP TYPE CERAMIC CAPACITOR	CK725B1C-104K0	1	332011045R1	NSP
C1072	CHIP TYPE CERAMIC CAPACITOR	CK725B1C-104K0	1	332011045R1	NSP
C1073	CHIP TYPE CERAMIC CAPACITOR	CK725B1C-104K0	1	332011045R1	NSP
C1074	CHIP TYPE CERAMIC CAPACITOR	CK725B1C-104K0	1	332011045R1	NSP
C1075	CHIP TYPE CERAMIC CAPACITOR	CK725B1C-104K0	1	332011045R1	NSP
C1079	CHIP TYPE CERAMIC CAPACITOR	CK725B1C-104K0	1	332011045R1	NSP
C1091	CHIP TYPE CERAMIC CAPACITOR	CK725B0J-226M	1	332092267R2	NSP
C1092	CHIP TYPE CERAMIC CAPACITOR	CK732B16V-106K	1	332071065R2	NSP
C1093	CHIP TYPE CERAMIC CAPACITOR	CK732B16V-106K	1	332071065R2	NSP
C1094	CHIP TYPE CERAMIC CAPACITOR	CK732B16V-106K	1	332071065R2	NSP
C1095	CHIP TYPE CERAMIC CAPACITOR	CK725B1C-104K0	1	332011045R1	NSP
C1096	CHIP TYPE CERAMIC CAPACITOR	CK725B1C-104K0	1	332011045R1	NSP
C1097	CHIP TYPE CERAMIC CAPACITOR	CK725B1C-104K0	1	332011045R1	NSP
C1098	CHIP TYPE CERAMIC CAPACITOR	CK725B1C-104K0	1	332011045R1	NSP
C1099	CHIP TYPE CERAMIC CAPACITOR	CK725B1A-225K1	1	332132255R1	NSP

C1100	CHIP TYPE CERAMIC CAPACITOR	CK725B1A-225K1	1	332132255R1	NSP
C1101	CHIP TYPE CERAMIC CAPACITOR	CK725B1C-104K0	1	332011045R1	NSP
C1102	CHIP TYPE CERAMIC CAPACITOR	CK732B16V-106K	1	332071065R2	NSP
C1103	CHIP TYPE CERAMIC CAPACITOR	CK725B1H-103K0	1	332031035R1	NSP
C1104	CHIP TYPE CERAMIC CAPACITOR	CK725B1H-103K0	1	332031035R1	NSP
C1105	CHIP TYPE CERAMIC CAPACITOR	CK725B1C-104K0	1	332011045R1	NSP
C1106	CHIP TYPE CERAMIC CAPACITOR	CK725B1C-104K0	1	332011045R1	NSP
C1112	CHIP TYPE CERAMIC CAPACITOR	CK725B1C-104K0	1	332011045R1	NSP
C1113	CHIP TYPE CERAMIC CAPACITOR	CK725B1C-104K0	1	332011045R1	NSP
C1119	CHIP TYPE CERAMIC CAPACITOR	CK725B1H-102K0	1	332031025R1	NSP
C1125	CHIP TYPE CERAMIC CAPACITOR	CK725B1H-102K0	1	332031025R1	NSP
C3001	CHIP TYPE CERAMIC CAPACITOR	CK725B1A-105K0	1	332001055R1	NSP
C3002	CHIP TYPE CERAMIC CAPACITOR	CK732B16V-106K	1	332071065R2	NSP
C3003	CHIP TYPE CERAMIC CAPACITOR	CK725B1A-105K0	1	332001055R1	NSP
C3004	CHIP TYPE CERAMIC CAPACITOR	CK725B1H-102K0	1	332031025R1	NSP
C3005	CHIP TYPE CERAMIC CAPACITOR	CC725CH1H-180J0	1	342031804R1	NSP
C3006	CHIP TYPE CERAMIC CAPACITOR	CC725CH1H-180J0	1	342031804R1	NSP
C3007	CHIP TYPE CERAMIC CAPACITOR	CC725CH1H-120J0	1	342031204R1	NSP
C3008	CHIP TYPE CERAMIC CAPACITOR	CC725CH1H-120J0	1	342031204R1	NSP
C3009	CHIP TYPE CERAMIC CAPACITOR	CK725B1H-102K0	1	332031025R1	NSP
C3010	CHIP TYPE CERAMIC CAPACITOR	CK725B1A-105K0	1	332001055R1	NSP
C3011	CHIP TYPE CERAMIC CAPACITOR	CK725B1H-102K0	1	332031025R1	NSP
C3012	CHIP TYPE CERAMIC CAPACITOR	CK725B1A-105K0	1	332001055R1	NSP
C3013	CHIP TYPE CERAMIC CAPACITOR	CK725B1H-102K0	1	332031025R1	NSP
C3014	CHIP TYPE CERAMIC CAPACITOR	CK725B1H-102K0	1	332031025R1	NSP
C3015	CHIP TYPE CERAMIC CAPACITOR	CK725B1C-104K0	1	332011045R1	NSP
C3016	CHIP TYPE CERAMIC CAPACITOR	CK732B16V-106K	1	332071065R2	NSP
C3017	CHIP TYPE CERAMIC CAPACITOR	CK732B16V-106K	1	332071065R2	NSP
C3018	CHIP TYPE CERAMIC CAPACITOR	CK725B1C-104K0	1	332011045R1	NSP
C3019	CHIP TYPE CERAMIC CAPACITOR	CK725B1C-104K0	1	332011045R1	NSP
C3020	CHIP TYPE CERAMIC CAPACITOR	CK725B1C-104K0	1	332011045R1	NSP
C3021	CHIP TYPE CERAMIC CAPACITOR	CK725B1C-104K0	1	332011045R1	NSP
C3022	CHIP TYPE CERAMIC CAPACITOR	CK725B1C-104K0	1	332011045R1	NSP
C3023	CHIP TYPE CERAMIC CAPACITOR	CK725B1C-104K0	1	332011045R1	NSP
C3024	CHIP TYPE CERAMIC CAPACITOR	CK725B1C-104K0	1	332011045R1	NSP
C3025	CHIP TYPE CERAMIC CAPACITOR	CK725B1C-104K0	1	332011045R1	NSP
C3026	CHIP TYPE CERAMIC CAPACITOR	CK725B1C-104K0	1	332011045R1	NSP
C3027	CHIP TYPE CERAMIC CAPACITOR	CK725B1C-104K0	1	332011045R1	NSP
C3028	CHIP TYPE CERAMIC CAPACITOR	CK725B1C-104K0	1	332011045R1	NSP
C3029	CHIP TYPE CERAMIC CAPACITOR	CK725B1C-104K0	1	332011045R1	NSP
C3030	CHIP TYPE CERAMIC CAPACITOR	CK725B1C-104K0	1	332011045R1	NSP
C3031	CHIP TYPE CERAMIC CAPACITOR	CK725B1C-104K0	1	332011045R1	NSP
C3032	CHIP TYPE CERAMIC CAPACITOR	CK725B1C-104K0	1	332011045R1	NSP
C3072	CHIP TYPE CERAMIC CAPACITOR	CK732B16V-106K	1	332071065R2	NSP
C3073	CHIP ELECT C	CECS6.3V-22M	1	398622207R2	NSP
C3073or	CHIP ELECT C	CEWX6.3V-22M	(1)	398122207R2	NSP
C3074	CHIP ELECT C	CECS16V-100M	1	398641017R2	NSP
C3074or	CHIP ELECT C	CEWX16V-100M	(1)	398141017R2	NSP
C3075	CHIP TYPE CERAMIC CAPACITOR	CK732B16V-106K	1	332071065R2	NSP
C3076	CHIP TYPE CERAMIC CAPACITOR	CK725B1C-104K0	1	332011045R1	NSP
C3077	CHIP TYPE CERAMIC CAPACITOR	CK725B1A-105K0	1	332001055R1	NSP
C3201	CHIP TYPE CERAMIC CAPACITOR	CK725B1C-104K0	1	332011045R1	NSP
C3202	CHIP TYPE CERAMIC CAPACITOR	CK725B1C-104K0	1	332011045R1	NSP
C3325	CHIP TYPE CERAMIC CAPACITOR	CK725B1A-105K0	1	332001055R1	NSP
C3400	CHIP TYPE CERAMIC CAPACITOR	CK725B1C-104K0	1	332011045R1	NSP

C3401	CHIP TYPE CERAMIC CAPACITOR	CC725CH1H-331J0	1	342033314R1	NSP
C3402	CHIP TYPE CERAMIC CAPACITOR	CK725B1C-104K0	1	332011045R1	NSP
C3403	CHIP TYPE CERAMIC CAPACITOR	CK725B1C-104K0	1	332011045R1	NSP
C3404	CHIP TYPE CERAMIC CAPACITOR	CK725B1C-104K0	1	332011045R1	NSP
C3405	CHIP TYPE CERAMIC CAPACITOR	CK725B1C-104K0	1	332011045R1	NSP
C3406	CHIP TYPE CERAMIC CAPACITOR	CK725B1A-105K0	1	332001055R1	NSP
C3407	CHIP TYPE CERAMIC CAPACITOR	CK725B1C-104K0	1	332011045R1	NSP
C3408	CHIP TYPE CERAMIC CAPACITOR	CK725B1H-102K0	1	332031025R1	NSP
C3410	CHIP TYPE CERAMIC CAPACITOR	CK725B1C-104K0	1	332011045R1	NSP
C3411	CHIP TYPE CERAMIC CAPACITOR	CK725B1C-104K0	1	332011045R1	NSP
C3412	CHIP TYPE CERAMIC CAPACITOR	CK725B1C-104K0	1	332011045R1	NSP
C3413	CHIP TYPE CERAMIC CAPACITOR	CC725CH1H-120J0	1	342031204R1	NSP
C3414	CHIP TYPE CERAMIC CAPACITOR	CC725CH1H-120J0	1	342031204R1	NSP
C3415	CHIP TYPE CERAMIC CAPACITOR	CK725B1C-104K0	1	332011045R1	NSP
C3416	CHIP TYPE CERAMIC CAPACITOR	CK725B1C-104K0	1	332011045R1	NSP
C3418	CHIP TYPE CERAMIC CAPACITOR	CK725B1C-104K0	1	332011045R1	NSP
C3419	CHIP TYPE CERAMIC CAPACITOR	CK725B1C-104K0	1	332011045R1	NSP
C3420	CHIP TYPE CERAMIC CAPACITOR	CK725B1C-104K0	1	332011045R1	NSP
C3422	CHIP TYPE CERAMIC CAPACITOR	CK725B1C-104K0	1	332011045R1	NSP
C3423	CHIP TYPE CERAMIC CAPACITOR	CK725B1C-104K0	1	332011045R1	NSP
C3424	CHIP TYPE CERAMIC CAPACITOR	CK725B1C-104K0	1	332011045R1	NSP
C3425	CHIP TYPE CERAMIC CAPACITOR	CK725B1C-104K0	1	332011045R1	NSP
C3426	CHIP TYPE CERAMIC CAPACITOR	CK725B1H-102K0	1	332031025R1	NSP
C3427	CHIP TYPE CERAMIC CAPACITOR	CK725B1C-104K0	1	332011045R1	NSP
C3428	CHIP TYPE CERAMIC CAPACITOR	CK725B1H-103K0	1	332031035R1	NSP
C3429	CHIP TYPE CERAMIC CAPACITOR	CK725B1H-103K0	1	332031035R1	NSP
C3431	CHIP TYPE CERAMIC CAPACITOR	CK725B1H-102K0	1	332031025R1	NSP
C3432	CHIP TYPE CERAMIC CAPACITOR	CK725B1H-102K0	1	332031025R1	NSP
C3433	CHIP TYPE CERAMIC CAPACITOR	CK725B1C-104K0	1	332011045R1	NSP
C3434	CHIP TYPE CERAMIC CAPACITOR	CK732B16V-106K	1	332071065R2	NSP
C3435	CHIP TYPE CERAMIC CAPACITOR	CK732B16V-106K	1	332071065R2	NSP
C3436	CHIP TYPE CERAMIC CAPACITOR	CK732B16V-106K	1	332071065R2	NSP
C3437	CHIP TYPE CERAMIC CAPACITOR	CK725B1C-104K0	1	332011045R1	NSP
C3438	CHIP TYPE CERAMIC CAPACITOR	CK725B1C-104K0	1	332011045R1	NSP
C3439	CHIP TYPE CERAMIC CAPACITOR	CK725B1C-104K0	1	332011045R1	NSP
C3440	CHIP TYPE CERAMIC CAPACITOR	CK725B1C-104K0	1	332011045R1	NSP
C3441	CHIP TYPE CERAMIC CAPACITOR	CK725B1C-104K0	1	332011045R1	NSP
C3442	CHIP TYPE CERAMIC CAPACITOR	CK732B16V-106K	1	332071065R2	NSP
C3443	CHIP TYPE CERAMIC CAPACITOR	CK725B1A-105K0	1	332001055R1	NSP
C3444	CHIP TYPE CERAMIC CAPACITOR	CK725B1A-105K0	1	332001055R1	NSP
C3445	CHIP TYPE CERAMIC CAPACITOR	CK725B1A-105K0	1	332001055R1	NSP
C3446	CHIP TYPE CERAMIC CAPACITOR	CK725B1A-105K0	1	332001055R1	NSP
C3457	CHIP TYPE CERAMIC CAPACITOR	CK725B1C-104K0	1	332011045R1	NSP
C3458	CHIP TYPE CERAMIC CAPACITOR	CK725B1C-104K0	1	332011045R1	NSP
C3459	CHIP TYPE CERAMIC CAPACITOR	CK725B1C-104K0	1	332011045R1	NSP
C3462	CHIP TYPE CERAMIC CAPACITOR	CK732B16V-106K	1	332071065R2	NSP
C3472	CHIP ELECT C	CECS4V-220M	1	3986G2217R2	NSP
C3472or	CHIP ELECT C	CEWX4V-220M	(1)	3981G2217R2	NSP
C3601	CHIP TYPE CERAMIC CAPACITOR	CK725B0J-226M	1	332092267R2	NSP
C3602	CHIP TYPE CERAMIC CAPACITOR	CK725B0J-226M	1	332092267R2	NSP
C3603	CHIP TYPE CERAMIC CAPACITOR	CK725B1H-102K0	1	332031025R1	NSP
C3651	CHIP TYPE CERAMIC CAPACITOR	CK725B1A-105K0	1	332001055R1	NSP
C3652	CHIP TYPE CERAMIC CAPACITOR	CK725B0J-226M	1	332092267R2	NSP
C3654	CHIP TYPE CERAMIC CAPACITOR	CK725B1C-104K0	1	332011045R1	NSP
C3655	CHIP TYPE CERAMIC CAPACITOR	CK725B1C-104K0	1	332011045R1	NSP

C3656	CHIP TYPE CERAMIC CAPACITOR	CK725B1C-104K0	1	332011045R1	NSP
C3657	CHIP TYPE CERAMIC CAPACITOR	CK725B1C-104K0	1	332011045R1	NSP
C3659	CHIP TYPE CERAMIC CAPACITOR	CK725B1C-104K0	1	332011045R1	NSP
C3660	CHIP TYPE CERAMIC CAPACITOR	CK725B1H-102K0	1	332031025R1	NSP
C3661	CHIP TYPE CERAMIC CAPACITOR	CK725B1H-102K0	1	332031025R1	NSP
C3662	CHIP TYPE CERAMIC CAPACITOR	CK725B0J-226M	1	332092267R2	NSP
C3663	CHIP TYPE CERAMIC CAPACITOR	CK725B1A-225K1	1	332132255R1	NSP
C3664	CHIP TYPE CERAMIC CAPACITOR	CK725B0J-226M	1	332092267R2	NSP
C3665	CHIP TYPE CERAMIC CAPACITOR	CK725B0J-226M	1	332092267R2	NSP
C3666	CHIP TYPE CERAMIC CAPACITOR	CC725CH1H-150J0	1	342031504R1	NSP
C3667	CHIP TYPE CERAMIC CAPACITOR	CC725CH1H-150J0	1	342031504R1	NSP
C3668	CHIP TYPE CERAMIC CAPACITOR	CK725B1C-104K0	1	332011045R1	NSP
C3669	CHIP TYPE CERAMIC CAPACITOR	CK725B1C-104K0	1	332011045R1	NSP
C3670	CHIP TYPE CERAMIC CAPACITOR	CK725B1C-104K0	1	332011045R1	NSP
C3674	CHIP TYPE CERAMIC CAPACITOR	CK725B1H-103K0	1	332031035R1	NSP
C3685	CHIP TYPE CERAMIC CAPACITOR	CK732B16V-106K	1	332071065R2	NSP
C3686	CHIP TYPE CERAMIC CAPACITOR	CK725B1A-105K0	1	332001055R1	NSP
C3689	CHIP TYPE CERAMIC CAPACITOR	CK725B1H-223K0	1	332032235R1	NSP
C3690	CHIP TYPE CERAMIC CAPACITOR	CC725CH1H-221J0	1	342032214R1	NSP
C3691	CHIP TYPE CERAMIC CAPACITOR	CC725CH1H-220J0	1	342032204R1	NSP
C3800	CHIP TYPE CERAMIC CAPACITOR	CK725B1H-103K0	1	332031035R1	NSP
C3801	CHIP TYPE CERAMIC CAPACITOR	CK725B1H-103K0	1	332031035R1	NSP
C3802	CHIP TYPE CERAMIC CAPACITOR	CK725B1H-103K0	1	332031035R1	NSP
C3803	CHIP TYPE CERAMIC CAPACITOR	CK725B1H-103K0	1	332031035R1	NSP
C3804	CHIP TYPE CERAMIC CAPACITOR	CK725B1H-103K0	1	332031035R1	NSP
C3805	CHIP TYPE CERAMIC CAPACITOR	CK725B1H-103K0	1	332031035R1	NSP
C3806	CHIP TYPE CERAMIC CAPACITOR	CK725B1H-103K0	1	332031035R1	NSP
C3810	CHIP TYPE CERAMIC CAPACITOR	CC725CH1H-221J0	1	342032214R1	NSP
C3811	CHIP TYPE CERAMIC CAPACITOR	CC725CH1H-221J0	1	342032214R1	NSP
C3901	CHIP TYPE CERAMIC CAPACITOR	CK725B1A-475K1	1	332134755R1	NSP
C3902	CHIP TYPE CERAMIC CAPACITOR	CK725B1A-225K1	1	332132255R1	NSP
C3903	CHIP TYPE CERAMIC CAPACITOR	CK725B1A-225K1	1	332132255R1	NSP
C3904	CHIP TYPE CERAMIC CAPACITOR	CK732B16V-106K	1	332071065R2	NSP
C3905	CHIP TYPE CERAMIC CAPACITOR	CK725B1A-475K1	1	332134755R1	NSP
C3906	CHIP TYPE CERAMIC CAPACITOR	CK725B1A-225K1	1	332132255R1	NSP
C3907	CHIP TYPE CERAMIC CAPACITOR	CK725B1A-225K1	1	332132255R1	NSP
C3908	CHIP TYPE CERAMIC CAPACITOR	CK732B16V-106K	1	332071065R2	NSP
C3909	CHIP TYPE CERAMIC CAPACITOR	CK725B1C-104K0	1	332011045R1	NSP
C3910	CHIP TYPE CERAMIC CAPACITOR	CK725B1A-225K1	1	332132255R1	NSP
C3911	CHIP TYPE CERAMIC CAPACITOR	CK725B1A-225K1	1	332132255R1	NSP
C3912	CHIP TYPE CERAMIC CAPACITOR	CK725B1A-475K1	1	332134755R1	NSP
C3913	CHIP TYPE CERAMIC CAPACITOR	CK725B1A-475K1	1	332134755R1	NSP
C3914	CHIP TYPE CERAMIC CAPACITOR	CK725B1A-225K1	1	332132255R1	NSP
C3915	CHIP TYPE CERAMIC CAPACITOR	CK732B16V-106K	1	332071065R2	NSP
C3916	CHIP TYPE CERAMIC CAPACITOR	CK732B16V-106K	1	332071065R2	NSP
C3917	CHIP TYPE CERAMIC CAPACITOR	CK732B16V-106K	1	332071065R2	NSP
C3918	CHIP TYPE CERAMIC CAPACITOR	CK732B16V-106K	1	332071065R2	NSP
C3919	CHIP TYPE CERAMIC CAPACITOR	CK725B1A-475K1	1	332134755R1	NSP
C3920	CHIP TYPE CERAMIC CAPACITOR	CK725B1A-225K1	1	332132255R1	NSP
C3921	CHIP TYPE CERAMIC CAPACITOR	CK725B1A-225K1	1	332132255R1	NSP
C3922	CHIP TYPE CERAMIC CAPACITOR	CK732B16V-106K	1	332071065R2	NSP
C3923	CHIP TYPE CERAMIC CAPACITOR	CK725B1H-103K0	1	332031035R1	NSP
C3924	CHIP TYPE CERAMIC CAPACITOR	CK725B1H-103K0	1	332031035R1	NSP
C3925	CHIP TYPE CERAMIC CAPACITOR	CK725B1H-103K0	1	332031035R1	NSP
C3926	CHIP TYPE CERAMIC CAPACITOR	CK725B1H-103K0	1	332031035R1	NSP

C3927	CHIP TYPE CERAMIC CAPACITOR	CK725B1H-103K0	1	332031035R1	NSP
C3928	CHIP TYPE CERAMIC CAPACITOR	CK732B16V-106K	1	332071065R2	NSP
C3929	CHIP TYPE CERAMIC CAPACITOR	CK732B16V-106K	1	332071065R2	NSP
C3930	CHIP TYPE CERAMIC CAPACITOR	CK725B1C-104K0	1	332011045R1	NSP
C3931	CHIP TYPE CERAMIC CAPACITOR	CK725B1C-104K0	1	332011045R1	NSP
C3932	CHIP TYPE CERAMIC CAPACITOR	CK725B1C-104K0	1	332011045R1	NSP
C3933	CHIP TYPE CERAMIC CAPACITOR	CK725B1C-104K0	1	332011045R1	NSP
C3934	CHIP TYPE CERAMIC CAPACITOR	CC725CH1H-101J0	1	342031014R1	NSP
C3935	CHIP TYPE CERAMIC CAPACITOR	CK725B1C-104K0	1	332011045R1	NSP
C3936	CHIP TYPE CERAMIC CAPACITOR	CK725B1C-104K0	1	332011045R1	NSP
C3937	CHIP TYPE CERAMIC CAPACITOR	CK725B1C-104K0	1	332011045R1	NSP
C3938	CHIP TYPE CERAMIC CAPACITOR	CK725B1C-104K0	1	332011045R1	NSP
C3939	CHIP TYPE CERAMIC CAPACITOR	CK725B1C-104K0	1	332011045R1	NSP
C3940	CHIP TYPE CERAMIC CAPACITOR	CC725CH1H-101J0	1	342031014R1	NSP
C3941	CHIP TYPE CERAMIC CAPACITOR	CC725CH1H-101J0	1	342031014R1	NSP
C3942	CHIP TYPE CERAMIC CAPACITOR	CK725B1C-104K0	1	332011045R1	NSP
C3943	CHIP TYPE CERAMIC CAPACITOR	CC725CH1H-101J0	1	342031014R1	NSP
C3944	CHIP TYPE CERAMIC CAPACITOR	CC725CH1H-101J0	1	342031014R1	NSP
C3945	CHIP TYPE CERAMIC CAPACITOR	CK725B1C-104K0	1	332011045R1	NSP
C3946	CHIP TYPE CERAMIC CAPACITOR	CC725CH1H-101J0	1	342031014R1	NSP
C3947	CHIP TYPE CERAMIC CAPACITOR	CK725B1C-104K0	1	332011045R1	NSP
C3948	CHIP TYPE CERAMIC CAPACITOR	CK725B1C-104K0	1	332011045R1	NSP
C3949	CHIP TYPE CERAMIC CAPACITOR	CK725B1C-104K0	1	332011045R1	NSP
C3950	CHIP TYPE CERAMIC CAPACITOR	CK732B16V-106K	1	332071065R2	NSP
C3951	CHIP TYPE CERAMIC CAPACITOR	CK725B1H-103K0	1	332031035R1	NSP
C3952	CHIP TYPE CERAMIC CAPACITOR	CK725B1H-103K0	1	332031035R1	NSP
C3953	CHIP TYPE CERAMIC CAPACITOR	CK725B1H-103K0	1	332031035R1	NSP
C3954	CHIP TYPE CERAMIC CAPACITOR	CK725B1H-103K0	1	332031035R1	NSP
C3955	CHIP TYPE CERAMIC CAPACITOR	CK725B1H-103K0	1	332031035R1	NSP
C3956	CHIP TYPE CERAMIC CAPACITOR	CK725B1H-103K0	1	332031035R1	NSP
C3957	CHIP TYPE CERAMIC CAPACITOR	CK725B1H-103K0	1	332031035R1	NSP
C3958	CHIP TYPE CERAMIC CAPACITOR	CK732B16V-106K	1	332071065R2	NSP
C3959	CHIP TYPE CERAMIC CAPACITOR	CK725B1H-103K0	1	332031035R1	NSP
C3960	CHIP TYPE CERAMIC CAPACITOR	CK725B1H-103K0	1	332031035R1	NSP
C3961	CHIP TYPE CERAMIC CAPACITOR	CK725B1H-103K0	1	332031035R1	NSP
C3962	CHIP TYPE CERAMIC CAPACITOR	CK725B1H-103K0	1	332031035R1	NSP
C3963	CHIP TYPE CERAMIC CAPACITOR	CK725B1H-103K0	1	332031035R1	NSP
C3964	CHIP TYPE CERAMIC CAPACITOR	CK732B16V-106K	1	332071065R2	NSP
C3965	CHIP TYPE CERAMIC CAPACITOR	CK725B1A-105K0	1	332001055R1	NSP
C3966	CHIP TYPE CERAMIC CAPACITOR	CK725B1A-105K0	1	332001055R1	NSP
C3967	CHIP TYPE CERAMIC CAPACITOR	CK725B1H-103K0	1	332031035R1	NSP
C3968	CHIP TYPE CERAMIC CAPACITOR	CK725B1H-103K0	1	332031035R1	NSP
C3969	CHIP TYPE CERAMIC CAPACITOR	CK725B1H-103K0	1	332031035R1	NSP
C3970	CHIP TYPE CERAMIC CAPACITOR	CK725B1A-105K0	1	332001055R1	NSP
C3971	CHIP TYPE CERAMIC CAPACITOR	CK725B1H-103K0	1	332031035R1	NSP
C3972	CHIP TYPE CERAMIC CAPACITOR	CC725CH1H-101J0	1	342031014R1	NSP
C3973	CHIP TYPE CERAMIC CAPACITOR	CC725CH1H-101J0	1	342031014R1	NSP
C3974	CHIP TYPE CERAMIC CAPACITOR	CC725CH1H-101J0	1	342031014R1	NSP
C3975	CHIP TYPE CERAMIC CAPACITOR	CK732B16V-106K	1	332071065R2	NSP
C3976	CHIP TYPE CERAMIC CAPACITOR	CK725B1H-103K0	1	332031035R1	NSP
C3977	CHIP TYPE CERAMIC CAPACITOR	CK725B1H-103K0	1	332031035R1	NSP
C3978	CHIP TYPE CERAMIC CAPACITOR	CK725B1A-105K0	1	332001055R1	NSP
C3979	CHIP TYPE CERAMIC CAPACITOR	CK732B16V-106K	1	332071065R2	NSP
C3980	CHIP TYPE CERAMIC CAPACITOR	CK725B1H-103K0	1	332031035R1	NSP
C3981	CHIP TYPE CERAMIC CAPACITOR	CK725B1H-103K0	1	332031035R1	NSP

C3982	CHIP TYPE CERAMIC CAPACITOR	CK732B16V-106K	1	332071065R2	NSP
C3983	CHIP TYPE CERAMIC CAPACITOR	CK725B1H-103K0	1	332031035R1	NSP
C3984	CHIP TYPE CERAMIC CAPACITOR	CK725B1H-103K0	1	332031035R1	NSP
C3985	CHIP TYPE CERAMIC CAPACITOR	CK732B16V-106K	1	332071065R2	NSP
C3986	CHIP TYPE CERAMIC CAPACITOR	CK725B1H-103K0	1	332031035R1	NSP
C3987	CHIP TYPE CERAMIC CAPACITOR	CK725B1H-103K0	1	332031035R1	NSP
C3988	CHIP TYPE CERAMIC CAPACITOR	CK732B16V-106K	1	332071065R2	NSP
C3989	CHIP TYPE CERAMIC CAPACITOR	CK725B1H-103K0	1	332031035R1	NSP
C3990	CHIP TYPE CERAMIC CAPACITOR	CK725B1H-103K0	1	332031035R1	NSP
C3991	CHIP TYPE CERAMIC CAPACITOR	CK732B16V-106K	1	332071065R2	NSP
C3992	CHIP TYPE CERAMIC CAPACITOR	CK725B1H-103K0	1	332031035R1	NSP
C3993	CHIP TYPE CERAMIC CAPACITOR	CK725B1H-103K0	1	332031035R1	NSP
C3994	CHIP TYPE CERAMIC CAPACITOR	CK725B1H-103K0	1	332031035R1	NSP
C3995	CHIP TYPE CERAMIC CAPACITOR	CK725B1H-103K0	1	332031035R1	NSP
C3996	CHIP TYPE CERAMIC CAPACITOR	CK725B1H-103K0	1	332031035R1	NSP
C3997	CHIP TYPE CERAMIC CAPACITOR	CK725B1H-103K0	1	332031035R1	NSP
C3998	CHIP TYPE CERAMIC CAPACITOR	CK732B16V-106K	1	332071065R2	NSP
C3999	CHIP TYPE CERAMIC CAPACITOR	CK725B1H-103K0	1	332031035R1	NSP
C7000	CHIP TYPE CERAMIC CAPACITOR	CK725B1H-102K0	1	332031025R1	NSP
C7001	CHIP TYPE CERAMIC CAPACITOR	CK725B1H-102K0	1	332031025R1	NSP
C7002	CHIP TYPE CERAMIC CAPACITOR	CK725B1H-102K0	1	332031025R1	NSP
C7003	CHIP TYPE CERAMIC CAPACITOR	CK725B1C-104K0	1	332011045R1	NSP
C7004	CHIP TYPE CERAMIC CAPACITOR	CK725B1C-104K0	1	332011045R1	NSP
C7005	CHIP TYPE CERAMIC CAPACITOR	CK725B50V-224K	1	332242245R1	NSP
C7006	CHIP TYPE CERAMIC CAPACITOR	CK725B1C-104K0	1	332011045R1	NSP
C7007	CHIP TYPE CERAMIC CAPACITOR	CK725B1A-105K0	1	332001055R1	NSP
C7008	CHIP TYPE CERAMIC CAPACITOR	CK725B50V-224K	1	332242245R1	NSP
C7009	CHIP TYPE CERAMIC CAPACITOR	CK725B1A-105K0	1	332001055R1	NSP
C7010	CHIP TYPE CERAMIC CAPACITOR	CK725B50V-224K	1	332242245R1	NSP
C7011	CHIP TYPE CERAMIC CAPACITOR	CK725B1A-105K0	1	332001055R1	NSP
C7012	CHIP TYPE CERAMIC CAPACITOR	CK725B50V-224K	1	332242245R1	NSP
C7013	CHIP TYPE CERAMIC CAPACITOR	CK725B1A-105K0	1	332001055R1	NSP
C7014	CHIP TYPE CERAMIC CAPACITOR	CK725B1C-104K0	1	332011045R1	NSP
C7015	CHIP TYPE CERAMIC CAPACITOR	CK725B1C-104K0	1	332011045R1	NSP
C7017	CHIP TYPE CERAMIC CAPACITOR	CK725B1C-104K0	1	332011045R1	NSP
C7018	CHIP TYPE CERAMIC CAPACITOR	CK725B1C-104K0	1	332011045R1	NSP
C7019	CHIP TYPE CERAMIC CAPACITOR	CK725B1C-104K0	1	332011045R1	NSP
C7020	CHIP TYPE CERAMIC CAPACITOR	CK725B1A-475K1	1	332134755R1	NSP
C7029	CHIP TYPE CERAMIC CAPACITOR	CK732B16V-106K	1	332071065R2	NSP
C7030	CHIP TYPE CERAMIC CAPACITOR	CK725B1H-102K0	1	332031025R1	NSP
C7031	CHIP TYPE CERAMIC CAPACITOR	CK725B1H-102K0	1	332031025R1	NSP
C7032	CHIP TYPE CERAMIC CAPACITOR	CK725B1C-104K0	1	332011045R1	NSP
C7036	CHIP TYPE CERAMIC CAPACITOR	CK725B1C-104K0	1	332011045R1	NSP
C7038	CHIP TYPE CERAMIC CAPACITOR	CK732B16V-106K	1	332071065R2	NSP
C7039	CHIP TYPE CERAMIC CAPACITOR	CK732B16V-106K	1	332071065R2	NSP
C7050	CHIP TYPE CERAMIC CAPACITOR	CK725B50V-224K	1	332242245R1	NSP
C7051	CHIP TYPE CERAMIC CAPACITOR	CK725B1A-105K0	1	332001055R1	NSP
C7052	CHIP TYPE CERAMIC CAPACITOR	CK725B1H-102K0	1	332031025R1	NSP
C7062	CHIP TYPE CERAMIC CAPACITOR	CK732B16V-106K	1	332071065R2	NSP
C7064	CHIP TYPE CERAMIC CAPACITOR	CK725B1C-104K0	1	332011045R1	NSP
C7067	CHIP TYPE CERAMIC CAPACITOR	CK725B1C-104K0	1	332011045R1	NSP
C7068	CHIP TYPE CERAMIC CAPACITOR	CK732B16V-106K	1	332071065R2	NSP
C7070	CHIP TYPE CERAMIC CAPACITOR	CK725B1C-104K0	1	332011045R1	NSP
C7071	CHIP TYPE CERAMIC CAPACITOR	CK732B16V-106K	1	332071065R2	NSP
C7072	CHIP TYPE CERAMIC CAPACITOR	CK725B1E-106K	1	332221065R2	NSP

C7075	CHIP TYPE CERAMIC CAPACITOR	CK725B1E-153K0	1	332021535R1	NSP
C7076	CHIP TYPE CERAMIC CAPACITOR	CK725B1H-104K1	1	332101045R1	NSP
C7077	CHIP TYPE CERAMIC CAPACITOR	CC725CH1H-101J0	1	342031014R1	NSP
C7180	CHIP TYPE CERAMIC CAPACITOR	CK725B1H-102K0	1	332031025R1	NSP
C7181	CHIP TYPE CERAMIC CAPACITOR	CK725B1H-102K0	1	332031025R1	NSP
C7182	CHIP TYPE CERAMIC CAPACITOR	CK725B1H-102K0	1	332031025R1	NSP
C7183	CHIP TYPE CERAMIC CAPACITOR	CK725B1H-102K0	1	332031025R1	NSP
C7184	CHIP TYPE CERAMIC CAPACITOR	CK725B1A-105K0	1	332001055R1	NSP
C8007	CHIP TYPE CERAMIC CAPACITOR	CK725B1H-102K0	1	332031025R1	NSP
C8008	CHIP TYPE CERAMIC CAPACITOR	CK725B1H-102K0	1	332031025R1	NSP
C8023	CHIP TYPE CERAMIC CAPACITOR	CK725B1A-105K0	1	332001055R1	NSP
C8024	CHIP TYPE CERAMIC CAPACITOR	CK725B1A-105K0	1	332001055R1	NSP
C8025	CHIP TYPE CERAMIC CAPACITOR	CK725B1A-105K0	1	332001055R1	NSP
C8038	CHIP TYPE CERAMIC CAPACITOR	CK725B1C-104K0	1	332011045R1	NSP
C8091	CHIP TYPE CERAMIC CAPACITOR	CK725B1C-104K0	1	332011045R1	NSP
C8113	CHIP TYPE CERAMIC CAPACITOR	CK725B1C-104K0	1	332011045R1	NSP
C8206	CHIP TYPE CERAMIC CAPACITOR	CK725B1C-104K0	1	332011045R1	NSP
C8207	CHIP TYPE CERAMIC CAPACITOR	CK725B1H-102K0	1	332031025R1	NSP
C8208	CHIP TYPE CERAMIC CAPACITOR	CK725B1C-104K0	1	332011045R1	NSP
C8210	CHIP TYPE CERAMIC CAPACITOR	CK725B1C-104K0	1	332011045R1	NSP
C8211	CHIP TYPE CERAMIC CAPACITOR	CK725B1C-104K0	1	332011045R1	NSP
C8214	CHIP TYPE CERAMIC CAPACITOR	CK725B1C-104K0	1	332011045R1	NSP
C8215	CHIP TYPE CERAMIC CAPACITOR	CK732B16V-106K	1	332071065R2	NSP
C8219	CHIP TYPE CERAMIC CAPACITOR	CK725B1H-103K0	1	332031035R1	NSP
C8220	CHIP TYPE CERAMIC CAPACITOR	CK725B1C-104K0	1	332011045R1	NSP
C8221	CHIP TYPE CERAMIC CAPACITOR	CK725B1H-102K0	1	332031025R1	NSP
C8222	CHIP TYPE CERAMIC CAPACITOR	CK725B1C-104K0	1	332011045R1	NSP
C8223	CHIP TYPE CERAMIC CAPACITOR	CK725B1C-104K0	1	332011045R1	NSP
C8224	CHIP TYPE CERAMIC CAPACITOR	CK725B1C-104K0	1	332011045R1	NSP
C8225	CHIP TYPE CERAMIC CAPACITOR	CK725B1C-104K0	1	332011045R1	NSP
C8229	CHIP TYPE CERAMIC CAPACITOR	CK725B1H-102K0	1	332031025R1	NSP
C8230	CHIP TYPE CERAMIC CAPACITOR	CK725B1C-104K0	1	332011045R1	NSP
C8231	CHIP TYPE CERAMIC CAPACITOR	CK725B1C-104K0	1	332011045R1	NSP
C8232	CHIP TYPE CERAMIC CAPACITOR	CK725B1H-103K0	1	332031035R1	NSP
C8236	CHIP TYPE CERAMIC CAPACITOR	CC725CH1H-120J0	1	342031204R1	NSP
C8237	CHIP TYPE CERAMIC CAPACITOR	CC725CH1H-120J0	1	342031204R1	NSP
C8239	CHIP TYPE CERAMIC CAPACITOR	CK725B1H-103K0	1	332031035R1	NSP
C8240	CHIP TYPE CERAMIC CAPACITOR	CK725B1C-683K0	1	332016835R1	NSP
C8241	CHIP TYPE CERAMIC CAPACITOR	CK725B1E-153K0	1	332021535R1	NSP
C8255	CHIP TYPE CERAMIC CAPACITOR	CK732B16V-106K	1	332071065R2	NSP
C8257	CHIP TYPE CERAMIC CAPACITOR	CK732B16V-106K	1	332071065R2	NSP
C8260	CHIP TYPE CERAMIC CAPACITOR	CK732B16V-106K	1	332071065R2	NSP
C8261	CHIP TYPE CERAMIC CAPACITOR	CK732B16V-106K	1	332071065R2	NSP
C8301	CHIP TYPE CERAMIC CAPACITOR	CK725B0J-106K	1	332091065R2	NSP
C8302	CHIP TYPE CERAMIC CAPACITOR	CK725B1C-104K0	1	332011045R1	NSP
C8303	CHIP TYPE CERAMIC CAPACITOR	CK725B1C-104K0	1	332011045R1	NSP
C8304	CHIP TYPE CERAMIC CAPACITOR	CK725B1C-104K0	1	332011045R1	NSP
C8305	CHIP TYPE CERAMIC CAPACITOR	CK725B1C-104K0	1	332011045R1	NSP
C8306	CHIP TYPE CERAMIC CAPACITOR	CK725B1C-104K0	1	332011045R1	NSP
C8307	CHIP TYPE CERAMIC CAPACITOR	CK725B1C-104K0	1	332011045R1	NSP
C8308	CHIP TYPE CERAMIC CAPACITOR	CK725B1C-104K0	1	332011045R1	NSP
C8309	CHIP TYPE CERAMIC CAPACITOR	CK725B1C-104K0	1	332011045R1	NSP
C8310	CHIP TYPE CERAMIC CAPACITOR	CK725B1C-104K0	1	332011045R1	NSP
C8311	CHIP TYPE CERAMIC CAPACITOR	CK725B1C-104K0	1	332011045R1	NSP
C8312	CHIP TYPE CERAMIC CAPACITOR	CK725B1C-104K0	1	332011045R1	NSP

C8313	CHIP TYPE CERAMIC CAPACITOR	CK725B1C-104K0	1	332011045R1	NSP
C8314	CHIP TYPE CERAMIC CAPACITOR	CK725B1C-104K0	1	332011045R1	NSP
C8315	CHIP TYPE CERAMIC CAPACITOR	CK725B1C-104K0	1	332011045R1	NSP
C8316	CHIP TYPE CERAMIC CAPACITOR	CK725B1C-104K0	1	332011045R1	NSP
C8317	CHIP TYPE CERAMIC CAPACITOR	CK725B1C-104K0	1	332011045R1	NSP
C8318	CHIP TYPE CERAMIC CAPACITOR	CK725B1C-104K0	1	332011045R1	NSP
C8319	CHIP TYPE CERAMIC CAPACITOR	CK725B0J-226M	1	332092267R2	NSP
C8320	CHIP TYPE CERAMIC CAPACITOR	CK725B1C-104K0	1	332011045R1	NSP
C8321	CHIP TYPE CERAMIC CAPACITOR	CK725B1C-104K0	1	332011045R1	NSP
C8322	CHIP TYPE CERAMIC CAPACITOR	CK725B1C-104K0	1	332011045R1	NSP
C8323	CHIP TYPE CERAMIC CAPACITOR	CK725B1C-104K0	1	332011045R1	NSP
C8324	CHIP TYPE CERAMIC CAPACITOR	CK725B1C-104K0	1	332011045R1	NSP
C8325	CHIP TYPE CERAMIC CAPACITOR	CK725B1C-104K0	1	332011045R1	NSP
C8326	CHIP TYPE CERAMIC CAPACITOR	CK725B1C-104K0	1	332011045R1	NSP
C8327	CHIP TYPE CERAMIC CAPACITOR	CK725B1C-104K0	1	332011045R1	NSP
C8328	CHIP TYPE CERAMIC CAPACITOR	CK725B1C-104K0	1	332011045R1	NSP
C8329	CHIP TYPE CERAMIC CAPACITOR	CK725B1C-104K0	1	332011045R1	NSP
C8330	CHIP TYPE CERAMIC CAPACITOR	CK725B1C-104K0	1	332011045R1	NSP
C8331	CHIP TYPE CERAMIC CAPACITOR	CK725B1C-104K0	1	332011045R1	NSP
C8332	CHIP TYPE CERAMIC CAPACITOR	CK725B1C-104K0	1	332011045R1	NSP
C8333	CHIP TYPE CERAMIC CAPACITOR	CK725B1C-104K0	1	332011045R1	NSP
C8334	CHIP TYPE CERAMIC CAPACITOR	CK725B1C-104K0	1	332011045R1	NSP
C8335	CHIP TYPE CERAMIC CAPACITOR	CK725B1C-104K0	1	332011045R1	NSP
C8336	CHIP TYPE CERAMIC CAPACITOR	CK725B1C-104K0	1	332011045R1	NSP
C8337	CHIP TYPE CERAMIC CAPACITOR	CK725B1C-104K0	1	332011045R1	NSP
C8338	CHIP TYPE CERAMIC CAPACITOR	CK725B1C-104K0	1	332011045R1	NSP
C8339	CHIP TYPE CERAMIC CAPACITOR	CK725B1C-104K0	1	332011045R1	NSP
C8340	CHIP TYPE CERAMIC CAPACITOR	CK725B1C-104K0	1	332011045R1	NSP
C8341	CHIP TYPE CERAMIC CAPACITOR	CK725B1C-104K0	1	332011045R1	NSP
C8342	CHIP TYPE CERAMIC CAPACITOR	CK725B1C-104K0	1	332011045R1	NSP
C8343	CHIP TYPE CERAMIC CAPACITOR	CK725B1A-105K0	1	332001055R1	NSP
C8344	CHIP TYPE CERAMIC CAPACITOR	CK725B1C-104K0	1	332011045R1	NSP
C8345	CHIP TYPE CERAMIC CAPACITOR	CK725B1C-104K0	1	332011045R1	NSP
C8346	CHIP TYPE CERAMIC CAPACITOR	CK725B1C-104K0	1	332011045R1	NSP
C8347	CHIP TYPE CERAMIC CAPACITOR	CC725CH1H-101J0	1	342031014R1	NSP
C8348	CHIP TYPE CERAMIC CAPACITOR	CC725CH1H-120J0	1	342031204R1	NSP
C8349	CHIP TYPE CERAMIC CAPACITOR	CC725CH1H-120J0	1	342031204R1	NSP
C8351	CHIP TYPE CERAMIC CAPACITOR	CK725B0J-226M	1	332092267R2	NSP
C8352	CHIP TYPE CERAMIC CAPACITOR	CK725B0J-226M	1	332092267R2	NSP
C8353	CHIP TYPE CERAMIC CAPACITOR	CK725B0J-226M	1	332092267R2	NSP
C8355	CHIP TYPE CERAMIC CAPACITOR	CK725B0J-106K	1	332091065R2	NSP
C8356	CHIP TYPE CERAMIC CAPACITOR	CK725B0J-106K	1	332091065R2	NSP
C8357	CHIP TYPE CERAMIC CAPACITOR	CK725B0J-106K	1	332091065R2	NSP
C8400	CHIP TYPE CERAMIC CAPACITOR	CK725B1H-103K0	1	332031035R1	NSP
C8401	CHIP TYPE CERAMIC CAPACITOR	CK725B1C-104K0	1	332011045R1	NSP
C8402	CHIP TYPE CERAMIC CAPACITOR	CK725B1C-104K0	1	332011045R1	NSP
C8403	CHIP TYPE CERAMIC CAPACITOR	CK725B1C-104K0	1	332011045R1	NSP
C8404	CHIP TYPE CERAMIC CAPACITOR	CK725B1C-104K0	1	332011045R1	NSP
C8405	CHIP TYPE CERAMIC CAPACITOR	CK725B1C-104K0	1	332011045R1	NSP
C8406	CHIP TYPE CERAMIC CAPACITOR	CK725B1C-104K0	1	332011045R1	NSP
C8407	CHIP TYPE CERAMIC CAPACITOR	CK725B1C-104K0	1	332011045R1	NSP
C8408	CHIP TYPE CERAMIC CAPACITOR	CK725B1C-104K0	1	332011045R1	NSP
C8409	CHIP TYPE CERAMIC CAPACITOR	CK725B1C-104K0	1	332011045R1	NSP
C8410	CHIP TYPE CERAMIC CAPACITOR	CK725B1C-104K0	1	332011045R1	NSP
C8411	CHIP TYPE CERAMIC CAPACITOR	CK725B1C-104K0	1	332011045R1	NSP

C8412	CHIP TYPE CERAMIC CAPACITOR	CK725B1C-104K0	1	332011045R1	NSP
C8413	CHIP TYPE CERAMIC CAPACITOR	CK732B16V-106K	1	332071065R2	NSP
C8414	CHIP TYPE CERAMIC CAPACITOR	CK732B16V-106K	1	332071065R2	NSP
C8415	CHIP TYPE CERAMIC CAPACITOR	CK725B1C-104K0	1	332011045R1	NSP
C8416	CHIP TYPE CERAMIC CAPACITOR	CK725B1C-104K0	1	332011045R1	NSP
C8417	CHIP TYPE CERAMIC CAPACITOR	CK725B1C-104K0	1	332011045R1	NSP
C8418	CHIP TYPE CERAMIC CAPACITOR	CK725B1C-104K0	1	332011045R1	NSP
C8419	CHIP TYPE CERAMIC CAPACITOR	CK725B1C-104K0	1	332011045R1	NSP
C8420	CHIP TYPE CERAMIC CAPACITOR	CK725B1C-104K0	1	332011045R1	NSP
C8421	CHIP TYPE CERAMIC CAPACITOR	CK725B1C-104K0	1	332011045R1	NSP
C8422	CHIP TYPE CERAMIC CAPACITOR	CK725B1C-104K0	1	332011045R1	NSP
C8423	CHIP TYPE CERAMIC CAPACITOR	CK725B1C-104K0	1	332011045R1	NSP
C8424	CHIP TYPE CERAMIC CAPACITOR	CK725B1C-104K0	1	332011045R1	NSP
C8425	CHIP TYPE CERAMIC CAPACITOR	CK725B1C-104K0	1	332011045R1	NSP
C8426	CHIP TYPE CERAMIC CAPACITOR	CK725B1C-104K0	1	332011045R1	NSP
C8427	CHIP TYPE CERAMIC CAPACITOR	CK725B1C-104K0	1	332011045R1	NSP
C8428	CHIP TYPE CERAMIC CAPACITOR	CK732B16V-106K	1	332071065R2	NSP
C8430	CHIP TYPE CERAMIC CAPACITOR	CK725B1C-104K0	1	332011045R1	NSP
C8431	CHIP TYPE CERAMIC CAPACITOR	CK725B1C-104K0	1	332011045R1	NSP
C8432	CHIP TYPE CERAMIC CAPACITOR	CK725B1C-104K0	1	332011045R1	NSP
C8433	CHIP TYPE CERAMIC CAPACITOR	CK725B1C-104K0	1	332011045R1	NSP
C8434	CHIP TYPE CERAMIC CAPACITOR	CK725B1C-104K0	1	332011045R1	NSP
C8435	CHIP TYPE CERAMIC CAPACITOR	CK725B1C-104K0	1	332011045R1	NSP
C8436	CHIP TYPE CERAMIC CAPACITOR	CK725B1C-104K0	1	332011045R1	NSP
C8437	CHIP TYPE CERAMIC CAPACITOR	CK725B1C-104K0	1	332011045R1	NSP
C8438	CHIP TYPE CERAMIC CAPACITOR	CK725B1C-104K0	1	332011045R1	NSP
C8439	CHIP TYPE CERAMIC CAPACITOR	CK725B1C-104K0	1	332011045R1	NSP
C8440	CHIP TYPE CERAMIC CAPACITOR	CK725B1C-104K0	1	332011045R1	NSP
C8441	CHIP TYPE CERAMIC CAPACITOR	CK725B1C-104K0	1	332011045R1	NSP
C8442	CHIP TYPE CERAMIC CAPACITOR	CK725B1C-104K0	1	332011045R1	NSP
C8443	CHIP TYPE CERAMIC CAPACITOR	CK732B16V-106K	1	332071065R2	NSP
C8444	CHIP TYPE CERAMIC CAPACITOR	CK732B16V-106K	1	332071065R2	NSP
C8445	CHIP TYPE CERAMIC CAPACITOR	CK732B16V-106K	1	332071065R2	NSP
C8446	CHIP TYPE CERAMIC CAPACITOR	CK732B16V-106K	1	332071065R2	NSP
C8447	CHIP TYPE CERAMIC CAPACITOR	CK732B16V-106K	1	332071065R2	NSP
C8449	CHIP TYPE CERAMIC CAPACITOR	CK725B1C-104K0	1	332011045R1	NSP
C8450	CHIP TYPE CERAMIC CAPACITOR	CK725B1C-104K0	1	332011045R1	NSP
C8451	CHIP TYPE CERAMIC CAPACITOR	CK725B1C-104K0	1	332011045R1	NSP
C8452	CHIP TYPE CERAMIC CAPACITOR	CK725B1C-104K0	1	332011045R1	NSP
C8453	CHIP TYPE CERAMIC CAPACITOR	CK725B1C-104K0	1	332011045R1	NSP
C8454	CHIP TYPE CERAMIC CAPACITOR	CK725B1C-104K0	1	332011045R1	NSP
C8455	CHIP TYPE CERAMIC CAPACITOR	CK725B1C-104K0	1	332011045R1	NSP
C8456	CHIP TYPE CERAMIC CAPACITOR	CK725B1C-104K0	1	332011045R1	NSP
C8457	CHIP TYPE CERAMIC CAPACITOR	CK725B1C-104K0	1	332011045R1	NSP
C8459	CHIP TYPE CERAMIC CAPACITOR	CK732B16V-106K	1	332071065R2	NSP
C8460	CHIP TYPE CERAMIC CAPACITOR	CC725CH1H-120J0	1	342031204R1	NSP
C8461	CHIP TYPE CERAMIC CAPACITOR	CC725CH1H-100J0	1	342031004R1	NSP
C8462	CHIP TYPE CERAMIC CAPACITOR	CK732B16V-106K	1	332071065R2	NSP
C8463	CHIP TYPE CERAMIC CAPACITOR	CC725CH1H-101J0	1	342031014R1	NSP
C8464	CHIP TYPE CERAMIC CAPACITOR	CK725B1H-103K0	1	332031035R1	NSP
C8465	CHIP TYPE CERAMIC CAPACITOR	CK725B1H-103K0	1	332031035R1	NSP
C8470	CHIP TYPE CERAMIC CAPACITOR	CK732B16V-106K	1	332071065R2	NSP
C8472	CHIP TYPE CERAMIC CAPACITOR	CK725B1C-104K0	1	332011045R1	NSP
C8473	CHIP TYPE CERAMIC CAPACITOR	CK725B1C-104K0	1	332011045R1	NSP
C8474	CHIP TYPE CERAMIC CAPACITOR	CK725B1H-102K0	1	332031025R1	NSP

C8475	CHIP TYPE CERAMIC CAPACITOR	CK725B1H-102K0	1	332031025R1	NSP
C8476	CHIP TYPE CERAMIC CAPACITOR	CK725B1A-105K0	1	332001055R1	NSP
C8477	CHIP TYPE CERAMIC CAPACITOR	CK725B1A-105K0	1	332001055R1	NSP
C8478	CHIP TYPE CERAMIC CAPACITOR	CK725B1A-105K0	1	332001055R1	NSP
C8484	CHIP TYPE CERAMIC CAPACITOR	CK725B1H-102K0	1	332031025R1	NSP
C8485	CHIP TYPE CERAMIC CAPACITOR	CK725B1C-104K0	1	332011045R1	NSP
C8611	CHIP TYPE CERAMIC CAPACITOR	CK725B1H-102K0	1	332031025R1	NSP
C8612	CHIP TYPE CERAMIC CAPACITOR	CK725B1H-102K0	1	332031025R1	NSP
C8621	CHIP TYPE CERAMIC CAPACITOR	CK725B1H-102K0	1	332031025R1	NSP
C8631	CHIP TYPE CERAMIC CAPACITOR	CK725B1H-102K0	1	332031025R1	NSP
C8632	CHIP TYPE CERAMIC CAPACITOR	CK725B1H-102K0	1	332031025R1	NSP
C8661	CHIP TYPE CERAMIC CAPACITOR	CK725B1H-102K0	1	332031025R1	NSP
C8662	CHIP TYPE CERAMIC CAPACITOR	CK725B1H-102K0	1	332031025R1	NSP
C8700	CHIP TYPE CERAMIC CAPACITOR	CK725B1C-104K0	1	332011045R1	NSP
C8701	CHIP TYPE CERAMIC CAPACITOR	CK725B1C-104K0	1	332011045R1	NSP
C8702	CHIP TYPE CERAMIC CAPACITOR	CK725B1C-104K0	1	332011045R1	NSP
C8703	CHIP TYPE CERAMIC CAPACITOR	CK725B1C-104K0	1	332011045R1	NSP
C8704	CHIP TYPE CERAMIC CAPACITOR	CK725B1C-104K0	1	332011045R1	NSP
C8705	CHIP TYPE CERAMIC CAPACITOR	CK725B1A-105K0	1	332001055R1	NSP
C8706	CHIP TYPE CERAMIC CAPACITOR	CK725B1C-104K0	1	332011045R1	NSP
C8707	CHIP TYPE CERAMIC CAPACITOR	CK725B1C-104K0	1	332011045R1	NSP
C8709	CHIP TYPE CERAMIC CAPACITOR	CK732B16V-106K	1	332071065R2	NSP
C8710	CHIP TYPE CERAMIC CAPACITOR	CK725B1C-104K0	1	332011045R1	NSP
C8894	CHIP TYPE CERAMIC CAPACITOR	CK725B0J-226M	1	332092267R2	NSP
C8895	CHIP TYPE CERAMIC CAPACITOR	CK725B1C-104K0	1	332011045R1	NSP
C8907	CHIP TYPE CERAMIC CAPACITOR	CK725B1A-105K0	1	332001055R1	NSP
C8908	CHIP TYPE CERAMIC CAPACITOR	CK732B16V-106K	1	332071065R2	NSP
C8909	CHIP TYPE CERAMIC CAPACITOR	CK725B1A-105K0	1	332001055R1	NSP
C8910	CHIP TYPE CERAMIC CAPACITOR	CK725B0J-226M	1	332092267R2	NSP
C8911	CHIP TYPE CERAMIC CAPACITOR	CK732B16V-106K	1	332071065R2	NSP
C8912	CHIP TYPE CERAMIC CAPACITOR	CK725B0J-226M	1	332092267R2	NSP
C8913	CHIP TYPE CERAMIC CAPACITOR	CK725B1A-225K1	1	332132255R1	NSP
C8917	CHIP TYPE CERAMIC CAPACITOR	CK725B1C-104K0	1	332011045R1	NSP
C8918	CHIP TYPE CERAMIC CAPACITOR	CK725B0J-226M	1	332092267R2	NSP
C8921	CHIP TYPE CERAMIC CAPACITOR	CK725B1H-103K0	1	332031035R1	NSP
C8922	CHIP TYPE CERAMIC CAPACITOR	CK725B1C-104K0	1	332011045R1	NSP
C8923	CHIP TYPE CERAMIC CAPACITOR	CK725B1E-106K	1	332221065R2	NSP
C8924	CHIP TYPE CERAMIC CAPACITOR	CK725B1E-106K	1	332221065R2	NSP
C8925	CHIP TYPE CERAMIC CAPACITOR	CK725B1H-103K0	1	332031035R1	NSP
C8926	CHIP TYPE CERAMIC CAPACITOR	CK725B0J-226M	1	332092267R2	NSP
C8927	CHIP TYPE CERAMIC CAPACITOR	CK725B0J-226M	1	332092267R2	NSP
C8929	CHIP TYPE CERAMIC CAPACITOR	CK732B16V-106K	1	332071065R2	NSP
C8930	CHIP TYPE CERAMIC CAPACITOR	CK725B0J-226M	1	332092267R2	NSP
C8931	CHIP TYPE CERAMIC CAPACITOR	CK725B1H-103K0	1	332031035R1	NSP
C8932	CHIP TYPE CERAMIC CAPACITOR	CK725B1C-104K0	1	332011045R1	NSP
C8933	CHIP TYPE CERAMIC CAPACITOR	CK725B1E-106K	1	332221065R2	NSP
C8934	CHIP TYPE CERAMIC CAPACITOR	CK725B1E-106K	1	332221065R2	NSP
C8935	CHIP TYPE CERAMIC CAPACITOR	CK725B1H-103K0	1	332031035R1	NSP
C8936	CHIP TYPE CERAMIC CAPACITOR	CK725B0J-226M	1	332092267R2	NSP
C8937	CHIP TYPE CERAMIC CAPACITOR	CK725B0J-226M	1	332092267R2	NSP
C8951	CHIP TYPE CERAMIC CAPACITOR	CK725B1H-103K0	1	332031035R1	NSP
C8952	CHIP TYPE CERAMIC CAPACITOR	CK725B1C-104K0	1	332011045R1	NSP
C8953	CHIP TYPE CERAMIC CAPACITOR	CK725B1E-106K	1	332221065R2	NSP
C8954	CHIP TYPE CERAMIC CAPACITOR	CK725B1E-106K	1	332221065R2	NSP
C8955	CHIP TYPE CERAMIC CAPACITOR	CK725B1H-103K0	1	332031035R1	NSP

C8956	CHIP TYPE CERAMIC CAPACITOR	CK725B0J-226M	1	332092267R2	NSP
C8957	CHIP TYPE CERAMIC CAPACITOR	CK725B0J-226M	1	332092267R2	NSP
C8961	CHIP TYPE CERAMIC CAPACITOR	CK725B1H-103K0	1	332031035R1	NSP
C8962	CHIP TYPE CERAMIC CAPACITOR	CK725B1C-104K0	1	332011045R1	NSP
C8963	CHIP TYPE CERAMIC CAPACITOR	CK725B1E-106K	1	332221065R2	NSP
C8964	CHIP TYPE CERAMIC CAPACITOR	CK725B1E-106K	1	332221065R2	NSP
C8966	CHIP TYPE CERAMIC CAPACITOR	CK725B0J-226M	1	332092267R2	NSP
C8967	CHIP TYPE CERAMIC CAPACITOR	CK725B0J-226M	1	332092267R2	NSP
C8980	CHIP TYPE CERAMIC CAPACITOR	CK725B1A-105K0	1	332001055R1	NSP
C8981	CHIP TYPE CERAMIC CAPACITOR	CK732B16V-106K	1	332071065R2	NSP
C8984	CHIP TYPE CERAMIC CAPACITOR	CC725CH1H-102J1	1	342101024R1	NSP
C8985	CHIP TYPE CERAMIC CAPACITOR	CK725B0J-226M	1	332092267R2	NSP
C8986	CHIP TYPE CERAMIC CAPACITOR	CK725B0J-226M	1	332092267R2	NSP
C8987	CHIP TYPE CERAMIC CAPACITOR	CK725B0J-226M	1	332092267R2	NSP
[Resistors]					
R1001	CHIP TYPE CARBON RESISTOR	RN72K1J-331JE	1	435033314R1	NSP
R1002	CHIP TYPE CARBON RESISTOR	RN72K1J-151JE	1	435031514R1	NSP
R1003	CHIP TYPE CARBON RESISTOR	RN72K1J-151JE	1	435031514R1	NSP
R1004	CHIP TYPE CARBON RESISTOR	RN72K1J-151JE	1	435031514R1	NSP
R1005	CHIP TYPE CARBON RESISTOR	RN72K1J-331JE	1	435033314R1	NSP
R1006	CHIP TYPE CARBON RESISTOR	RN72K1J-560JE	1	435035604R1	NSP
R1007	CHIP TYPE CARBON RESISTOR	RN72K1J-105JE	1	435031054R1	NSP
R1008	CHIP TYPE CARBON RESISTOR	RN72K1J-102JE	1	435031024R1	NSP
R1010	CHIP TYPE CARBON RESISTOR	RN72K1J-103JE	1	435031034R1	NSP
R1011	CHIP TYPE CARBON RESISTOR	RN72K1J-220JE	1	435032204R1	NSP
R1012	CHIP TYPE CARBON RESISTOR	RN72K1J-220JE	1	435032204R1	NSP
R1013	CHIP TYPE CARBON RESISTOR	RN72K1J-220JE	1	435032204R1	NSP
R1014	CHIP TYPE CARBON RESISTOR	RN72K1J-220JE	1	435032204R1	NSP
R1015	CHIP TYPE CARBON RESISTOR	RN72K1J-220JE	1	435032204R1	NSP
R1016	CHIP TYPE CARBON RESISTOR	RN72K1J-220JE	1	435032204R1	NSP
R1017	CHIP TYPE CARBON RESISTOR	RN72K1J-470JE	1	435034704R1	NSP
R1018	CHIP TYPE CARBON RESISTOR	RN72K1J-103JE	1	435031034R1	NSP
R1019	CHIP TYPE CARBON RESISTOR	RN72K1J-470JE	1	435034704R1	NSP
R1020	CHIP TYPE CARBON RESISTOR	RN72K1J-391JE	1	435033914R1	NSP
R1021	CHIP TYPE CARBON RESISTOR	RN72K1J-101JE	1	435031014R1	NSP
R1022	CHIP TYPE CARBON RESISTOR	RN72K1J-151JE	1	435031514R1	NSP
R1023	CHIP TYPE CARBON RESISTOR	RN72K1J-221JE	1	435032214R1	NSP
R1024	CHIP TYPE CARBON RESISTOR	RN72K1J-470JE	1	435034704R1	NSP
R1025	CHIP TYPE CARBON RESISTOR	RN72K1J-470JE	1	435034704R1	NSP
R1026	CHIP TYPE CARBON RESISTOR	RN72K1J-331JE	1	435033314R1	NSP
R1027	CHIP TYPE CARBON RESISTOR	RN72K1J-221JE	1	435032214R1	NSP
R1028	CHIP TYPE CARBON RESISTOR	RN72K1J-221JE	1	435032214R1	NSP
R1029	CHIP TYPE CARBON RESISTOR	RN72K1J-102JE	1	435031024R1	NSP
R1031	CHIP TYPE CARBON RESISTOR	RN72K1J-331JE	1	435033314R1	NSP
R1032	CHIP TYPE CARBON RESISTOR	RN72K1J-331JE	1	435033314R1	NSP
R1033	CHIP TYPE CARBON RESISTOR	RN72K1J-103JE	1	435031034R1	NSP
R1034	CHIP TYPE CARBON RESISTOR	RN72K1J-221JE	1	435032214R1	NSP
R1035	CHIP TYPE CARBON RESISTOR	RN72K1J-331JE	1	435033314R1	NSP
R1037	CHIP TYPE CARBON RESISTOR	RN72K1J-331JE	1	435033314R1	NSP
R1039	CHIP TYPE CARBON RESISTOR	RN72K1J-330JE	1	435033304R1	NSP
R1041	CHIP TYPE CARBON RESISTOR	RN72K1J-221JE	1	435032214R1	NSP
R1042	CHIP TYPE CARBON RESISTOR	RN72K1J-331JE	1	435033314R1	NSP
R1043	CHIP TYPE CARBON RESISTOR	RN72K1J-221JE	1	435032214R1	NSP
R1044	CHIP TYPE CARBON RESISTOR	RN72K1J-221JE	1	435032214R1	NSP
R1046	CHIP TYPE CARBON RESISTOR	RN72K1J-470JE	1	435034704R1	NSP

R1047	CHIP TYPE CARBON RESISTOR	RN72K1J-681JE	1	435036814R1	NSP
R1049	CHIP RESISTOR NETWORK	MNR04MRAPJ103	1	43464710304R2	NSP
R1049or	CHIP RESISTOR NETWORK	YCN104-103-JK	(1)	43464C10304R1	NSP
R1054	CHIP TYPE CARBON RESISTOR	RN72K1J-221JE	1	435032214R1	NSP
R1055	CHIP TYPE CARBON RESISTOR	RN72K1J-000JE	1	435030004R1	NSP
R1056	CHIP TYPE CARBON RESISTOR	RN72K1J-000JE	1	435030004R1	NSP
R1057	CHIP TYPE CARBON RESISTOR	RN72K1J-681JE	1	435036814R1	NSP
R1059	CHIP TYPE CARBON RESISTOR	RN72K1J-103JE	1	435031034R1	NSP
R1060	CHIP TYPE CARBON RESISTOR	RN72K1J-470JE	1	435034704R1	NSP
R1061	CHIP TYPE CARBON RESISTOR	RN72K1J-103JE	1	435031034R1	NSP
R1062	CHIP TYPE CARBON RESISTOR	RN72K1J-221JE	1	435032214R1	NSP
R1063	CHIP TYPE CARBON RESISTOR	RN72K1J-103JE	1	435031034R1	NSP
R1064	CHIP TYPE CARBON RESISTOR	RN72K1J-221JE	1	435032214R1	NSP
R1066	CHIP TYPE CARBON RESISTOR	RN72K1J-470JE	1	435034704R1	NSP
R1067	CHIP TYPE CARBON RESISTOR	RN72K1J-103JE	1	435031034R1	NSP
R1069	CHIP TYPE CARBON RESISTOR	RN72K1J-151JE	1	435031514R1	NSP
R1071	CHIP TYPE CARBON RESISTOR	RN72K1J-470JE	1	435034704R1	NSP
R1072	CHIP TYPE CARBON RESISTOR	RN72K1J-331JE	1	435033314R1	NSP
R1073	CHIP TYPE CARBON RESISTOR	RN72K1J-331JE	1	435033314R1	NSP
R1074	CHIP TYPE CARBON RESISTOR	RN72K1J-331JE	1	435033314R1	NSP
R1075	CHIP TYPE CARBON RESISTOR	RN72K1J-221JE	1	435032214R1	NSP
R1076	CHIP TYPE CARBON RESISTOR	RN72K1J-330JE	1	435033304R1	NSP
R1077	CHIP TYPE CARBON RESISTOR	RN72K1J-330JE	1	435033304R1	NSP
R1078	CHIP TYPE PLASTIC FILM CAPACITOR	50MU103KY11608	1	376921035R2	NSP
R1079	CHIP TYPE PLASTIC FILM CAPACITOR	50MU103KY11608	1	376921035R2	NSP
R1081	CHIP TYPE CARBON RESISTOR	RN72K1J-181JE	1	435031814R1	NSP
R1083	CHIP TYPE CARBON RESISTOR	RN72K1J-103JE	1	435031034R1	NSP
R1084	CHIP TYPE CARBON RESISTOR	RN72K1J-221JE	1	435032214R1	NSP
R1085	CHIP TYPE CARBON RESISTOR	RN72K1J-181JE	1	435031814R1	NSP
R1087	CHIP TYPE CARBON RESISTOR	RN72K1J-471JE	1	435034714R1	NSP
R1088	CHIP TYPE CARBON RESISTOR	RN72K1J-471JE	1	435034714R1	NSP
R1090	CHIP TYPE CARBON RESISTOR	RN72K1J-331JE	1	435033314R1	NSP
R1091	CHIP TYPE CARBON RESISTOR	RN72K1J-331JE	1	435033314R1	NSP
R1092	CHIP TYPE CARBON RESISTOR	RN72K1J-331JE	1	435033314R1	NSP
R1093	CHIP TYPE CARBON RESISTOR	RN72K1J-103JE	1	435031034R1	NSP
R1098	CHIP TYPE CARBON RESISTOR	RN72K1J-103JE	1	435031034R1	NSP
R1099	CHIP TYPE CARBON RESISTOR	RN72K1J-103JE	1	435031034R1	NSP
R1100	CHIP TYPE CARBON RESISTOR	RN72K1J-101JE	1	435031014R1	NSP
R1101	CHIP TYPE CARBON RESISTOR	RN72K1J-221JE	1	435032214R1	NSP
R1102	CHIP TYPE CARBON RESISTOR	RN72K1J-221JE	1	435032214R1	NSP
R1103	CHIP TYPE CARBON RESISTOR	RN72K1J-331JE	1	435033314R1	NSP
R1104	CHIP TYPE CARBON RESISTOR	RN72K1J-470JE	1	435034704R1	NSP
R1105	CHIP TYPE CARBON RESISTOR	RN72K1J-681JE	1	435036814R1	NSP
R1106	CHIP TYPE CARBON RESISTOR	RN72K1J-151JE	1	435031514R1	NSP
R1107	CHIP TYPE CARBON RESISTOR	RN72K1J-221JE	1	435032214R1	NSP
R1108	CHIP TYPE CARBON RESISTOR	RN72K1J-331JE	1	435033314R1	NSP
R1109	CHIP TYPE CARBON RESISTOR	RN72K1J-470JE	1	435034704R1	NSP
R1110	CHIP TYPE CARBON RESISTOR	RN72K1J-221JE	1	435032214R1	NSP
R1111	CHIP TYPE CARBON RESISTOR	RN72K1J-221JE	1	435032214R1	NSP
R1112	CHIP TYPE CARBON RESISTOR	RN72K1J-221JE	1	435032214R1	NSP
R1113	CHIP TYPE CARBON RESISTOR	RN72K1J-470JE	1	435034704R1	NSP
R1114	CHIP TYPE CARBON RESISTOR	RN72K1J-221JE	1	435032214R1	NSP
R1115	CHIP TYPE CARBON RESISTOR	RN72K1J-221JE	1	435032214R1	NSP
R1116	CHIP TYPE CARBON RESISTOR	RN72K1J-470JE	1	435034704R1	NSP
R1117	CHIP TYPE CARBON RESISTOR	RN72K1J-103JE	1	435031034R1	NSP

R1124	CHIP TYPE CARBON RESISTOR	RN72K1J-221JE	1	435032214R1	NSP
R1125	CHIP TYPE CARBON RESISTOR	RN72K1J-151JE	1	435031514R1	NSP
R1126	CHIP TYPE CARBON RESISTOR	RN72K1J-151JE	1	435031514R1	NSP
R1127	CHIP TYPE CARBON RESISTOR	RN72K1J-151JE	1	435031514R1	NSP
R1128	CHIP TYPE CARBON RESISTOR	RN72K1J-331JE	1	435033314R1	NSP
R1129	CHIP TYPE CARBON RESISTOR	RN72K1J-471JE	1	435034714R1	NSP
R1130	CHIP TYPE CARBON RESISTOR	RN72K1J-471JE	1	435034714R1	NSP
R1131	CHIP TYPE CARBON RESISTOR	RN72K1J-103JE	1	435031034R1	NSP
R1132	CHIP TYPE CARBON RESISTOR	RN72K1J-151JE	1	435031514R1	NSP
R1133	CHIP TYPE CARBON RESISTOR	RN72K1J-470JE	1	435034704R1	NSP
R1134	CHIP TYPE CARBON RESISTOR	RN72K1J-470JE	1	435034704R1	NSP
R1135	CHIP TYPE CARBON RESISTOR	RN72K1J-470JE	1	435034704R1	NSP
R1136	CHIP TYPE CARBON RESISTOR	RN72K1J-470JE	1	435034704R1	NSP
R1137	CHIP TYPE CARBON RESISTOR	RN72K1J-470JE	1	435034704R1	NSP
R1138	CHIP TYPE CARBON RESISTOR	RN72K1J-470JE	1	435034704R1	NSP
R1139	CHIP TYPE CARBON RESISTOR	RN72K1J-470JE	1	435034704R1	NSP
R1141	CHIP TYPE CARBON RESISTOR	RN72K1J-470JE	1	435034704R1	NSP
R1142	CHIP TYPE CARBON RESISTOR	RN72K1J-470JE	1	435034704R1	NSP
R1143	CHIP TYPE CARBON RESISTOR	RN72K1J-470JE	1	435034704R1	NSP
R1144	CHIP TYPE CARBON RESISTOR	RN72K1J-470JE	1	435034704R1	NSP
R1145	CHIP TYPE CARBON RESISTOR	RN72K1J-470JE	1	435034704R1	NSP
R1146	CHIP TYPE CARBON RESISTOR	RN72K1J-470JE	1	435034704R1	NSP
R1147	CHIP TYPE CARBON RESISTOR	RN72K1J-470JE	1	435034704R1	NSP
R1149	CHIP TYPE CARBON RESISTOR	RN72K1J-331JE	1	435033314R1	NSP
R1150	CHIP TYPE CARBON RESISTOR	RN72K1J-331JE	1	435033314R1	NSP
R1153	CHIP TYPE CARBON RESISTOR	RN72K1J-000JE	1	435030004R1	NSP
R1154	CHIP TYPE CARBON RESISTOR	RN72K1J-000JE	1	435030004R1	NSP
R1155	CHIP TYPE CARBON RESISTOR	RN72K1J-103JE	1	435031034R1	NSP
R1156	CHIP TYPE CARBON RESISTOR	RN72K1J-103JE	1	435031034R1	NSP
R1158	CHIP TYPE CARBON RESISTOR	RN72K1J-330JE	1	435033304R1	NSP
R1159	CHIP TYPE CARBON RESISTOR	RN72K1J-103JE	1	435031034R1	NSP
R1160	CHIP TYPE CARBON RESISTOR	RN72K1J-330JE	1	435033304R1	NSP
R1161	CHIP TYPE CARBON RESISTOR	RN72K1J-470JE	1	435034704R1	NSP
R1167	CHIP RESISTOR NETWORK	MNR04MRAPJ470	1	43464747004R2	NSP
R1167or	CHIP RESISTOR NETWORK	YCN104-470-JK	(1)	43464C47004R1	NSP
R1168	CHIP TYPE CARBON RESISTOR	RN72K1J-470JE	1	435034704R1	NSP
R1176	CHIP TYPE CARBON RESISTOR	RN72K1J-000JE	1	435030004R1	NSP
R1178	CHIP RESISTOR NETWORK	MNR04MRAPJ470	1	43464747004R2	NSP
R1178or	CHIP RESISTOR NETWORK	YCN104-470-JK	(1)	43464C47004R1	NSP
R1179	CHIP TYPE CARBON RESISTOR	RN72K1J-470JE	1	435034704R1	NSP
R1180	CHIP TYPE CARBON RESISTOR	RN72K1J-470JE	1	435034704R1	NSP
R1181	CHIP TYPE CARBON RESISTOR	RN72K1J-470JE	1	435034704R1	NSP
R1185	CHIP RESISTOR NETWORK	MNR04MRAPJ470	1	43464747004R2	NSP
R1185or	CHIP RESISTOR NETWORK	YCN104-470-JK	(1)	43464C47004R1	NSP
R1186	CHIP TYPE CARBON RESISTOR	RN72K1J-470JE	1	435034704R1	NSP
R1187	CHIP TYPE CARBON RESISTOR	RN72K1J-470JE	1	435034704R1	NSP
R1188	CHIP TYPE CARBON RESISTOR	RN72K1J-470JE	1	435034704R1	NSP
R1189	CHIP TYPE CARBON RESISTOR	RN72K1J-470JE	1	435034704R1	NSP
R1190	CHIP TYPE CARBON RESISTOR	RN72K1J-102JE	1	435031024R1	NSP
R1191	CHIP TYPE CARBON RESISTOR	RN72K1J-102JE	1	435031024R1	NSP
R1208	CHIP TYPE CARBON RESISTOR	RN72K1J-101JE	1	435031014R1	NSP
R3009	CHIP TYPE CARBON RESISTOR	RN72K1J-102JE	1	435031024R1	NSP
R3010	CHIP TYPE CARBON RESISTOR	RN72K1J-475JE	1	435034754R1	NSP
R3011	CHIP TYPE CARBON RESISTOR	RN72K1J-105JE	1	435031054R1	NSP
R3012	CHIP TYPE CARBON RESISTOR	RN72K1J-220JE	1	435032204R1	NSP

R3013	CHIP TYPE CARBON RESISTOR	RN72K1J-220JE	1	435032204R1	NSP
R3014	CHIP TYPE CARBON RESISTOR	RN72K1J-220JE	1	435032204R1	NSP
R3015	CHIP TYPE CARBON RESISTOR	RN72K1J-220JE	1	435032204R1	NSP
R3016	CHIP TYPE CARBON RESISTOR	RN72K1J-220JE	1	435032204R1	NSP
R3017	CHIP TYPE CARBON RESISTOR	RN72K1J-220JE	1	435032204R1	NSP
R3018	CHIP TYPE CARBON RESISTOR	RN72K1J-220JE	1	435032204R1	NSP
R3019	CHIP TYPE CARBON RESISTOR	RN72K1J-472JE	1	435034724R1	NSP
R3020	CHIP TYPE CARBON RESISTOR	RN72K1J-103JE	1	435031034R1	NSP
R3021	CHIP TYPE CARBON RESISTOR	RN72K1J-103JE	1	435031034R1	NSP
R3022	CHIP TYPE CARBON RESISTOR	RN72K1J-470JE	1	435034704R1	NSP
R3023	CHIP TYPE CARBON RESISTOR	RN72K1J-470JE	1	435034704R1	NSP
R3028	CHIP TYPE CARBON RESISTOR	RN72K1J-103JE	1	435031034R1	NSP
R3029	CHIP TYPE CARBON RESISTOR	RN72K1J-102JE	1	435031024R1	NSP
R3030	CHIP TYPE CARBON RESISTOR	RN72K1J-223JE	1	435032234R1	NSP
R3031	CHIP TYPE CARBON RESISTOR	RN72K1J-104JE	1	435031044R1	NSP
R3032	CHIP TYPE CARBON RESISTOR	RN72K1J-470JE	1	435034704R1	NSP
R3033	CHIP TYPE CARBON RESISTOR	RN72K1J-470JE	1	435034704R1	NSP
R3034	CHIP TYPE CARBON RESISTOR	RN72K1J-470JE	1	435034704R1	NSP
R3035	CHIP TYPE CARBON RESISTOR	RN72K1J-102JE	1	435031024R1	NSP
R3036	CHIP TYPE CARBON RESISTOR	RN72K1J-470JE	1	435034704R1	NSP
R3037	CHIP TYPE CARBON RESISTOR	RN72K1J-470JE	1	435034704R1	NSP
R3038	CHIP TYPE CARBON RESISTOR	RN72K1J-470JE	1	435034704R1	NSP
R3039	CHIP TYPE CARBON RESISTOR	RN72K1J-470JE	1	435034704R1	NSP
R3040	CHIP TYPE CARBON RESISTOR	MCR03EZPF49R9(49.9_1%)	1	4100037R2	NSP
R3041	CHIP TYPE CARBON RESISTOR	RN72K1J-271FE	1	435032712R1	NSP
R3042	CHIP TYPE CARBON RESISTOR	RN72K1J-222FE	1	435032222R1	NSP
R3043	CHIP TYPE CARBON RESISTOR	RN72K1J-103FE	1	435031032R1	NSP
R3044	CHIP TYPE CARBON RESISTOR	RN72K1J-103FE	1	435031032R1	NSP
R3045	CHIP TYPE CARBON RESISTOR	RN72K1J-102FE	1	435031022R1	NSP
R3046	CHIP TYPE CARBON RESISTOR	RN72K1J-102FE	1	435031022R1	NSP
R3072	CHIP TYPE CARBON RESISTOR	RN72K1J-682JE	1	435036824R1	NSP
R3073	CHIP TYPE CARBON RESISTOR	RN72K1J-682JE	1	435036824R1	NSP
R3074	CHIP TYPE CARBON RESISTOR	RN72K1J-393JE	1	435033934R1	NSP
R3075	CHIP TYPE CARBON RESISTOR	RN72K1J-393JE	1	435033934R1	NSP
R3078	CHIP TYPE CARBON RESISTOR	RN72K1J-000JE	1	435030004R1	NSP
R3079	CHIP TYPE CARBON RESISTOR	RN72K1J-475JE	1	435034754R1	NSP
R3080	CHIP TYPE CARBON RESISTOR	RN72K1J-475JE	1	435034754R1	NSP
R3081	CHIP RESISTOR NETWORK	MNR04MRAPJ470	1	43464747004R2	NSP
R3081or	CHIP RESISTOR NETWORK	YCN104-470-JK	(1)	43464C47004R1	NSP
R3082	CHIP RESISTOR NETWORK	MNR04MRAPJ470	1	43464747004R2	NSP
R3082or	CHIP RESISTOR NETWORK	YCN104-470-JK	(1)	43464C47004R1	NSP
R3083	CHIP RESISTOR NETWORK	MNR04MRAPJ470	1	43464747004R2	NSP
R3083or	CHIP RESISTOR NETWORK	YCN104-470-JK	(1)	43464C47004R1	NSP
R3201	CHIP TYPE CARBON RESISTOR	RN72K1J-470JE	1	435034704R1	NSP
R3202	CHIP TYPE CARBON RESISTOR	RN72K1J-181JE	1	435031814R1	NSP
R3203	CHIP TYPE CARBON RESISTOR	RN72K1J-470JE	1	435034704R1	NSP
R3204	CHIP TYPE CARBON RESISTOR	RN72K1J-470JE	1	435034704R1	NSP
R3205	CHIP TYPE CARBON RESISTOR	RN72K1J-470JE	1	435034704R1	NSP
R3206	CHIP TYPE CARBON RESISTOR	RN72K1J-470JE	1	435034704R1	NSP
R3207	CHIP TYPE CARBON RESISTOR	RN72K1J-470JE	1	435034704R1	NSP
R3208	CHIP TYPE CARBON RESISTOR	RN72K1J-470JE	1	435034704R1	NSP
R3209	CHIP TYPE CARBON RESISTOR	RN72K1J-151JE	1	435031514R1	NSP
R3210	CHIP TYPE CARBON RESISTOR	RN72K1J-470JE	1	435034704R1	NSP
R3211	CHIP TYPE CARBON RESISTOR	RN72K1J-470JE	1	435034704R1	NSP
R3212	CHIP TYPE CARBON RESISTOR	RN72K1J-470JE	1	435034704R1	NSP

R3213	CHIP TYPE CARBON RESISTOR	RN72K1J-470JE	1	435034704R1	NSP
R3214	CHIP TYPE CARBON RESISTOR	RN72K1J-470JE	1	435034704R1	NSP
R3215	CHIP TYPE CARBON RESISTOR	RN72K1J-470JE	1	435034704R1	NSP
R3244	CHIP TYPE CARBON RESISTOR	RN72K1J-220JE	1	435032204R1	NSP
R3245	CHIP TYPE CARBON RESISTOR	RN72K1J-220JE	1	435032204R1	NSP
R3246	CHIP TYPE CARBON RESISTOR	RN72K1J-220JE	1	435032204R1	NSP
R3247	CHIP TYPE CARBON RESISTOR	RN72K1J-220JE	1	435032204R1	NSP
R3250	CHIP TYPE CARBON RESISTOR	RN72K1J-220JE	1	435032204R1	NSP
R3251	CHIP TYPE CARBON RESISTOR	RN72K1J-220JE	1	435032204R1	NSP
R3252	CHIP TYPE CARBON RESISTOR	RN72K1J-220JE	1	435032204R1	NSP
R3253	CHIP TYPE CARBON RESISTOR	RN72K1J-220JE	1	435032204R1	NSP
R3254	CHIP TYPE CARBON RESISTOR	RN72K1J-220JE	1	435032204R1	NSP
R3255	CHIP TYPE CARBON RESISTOR	RN72K1J-220JE	1	435032204R1	NSP
R3256	CHIP TYPE CARBON RESISTOR	RN72K1J-220JE	1	435032204R1	NSP
R3257	CHIP TYPE CARBON RESISTOR	RN72K1J-220JE	1	435032204R1	NSP
R3258	CHIP TYPE CARBON RESISTOR	RN72K1J-220JE	1	435032204R1	NSP
R3259	CHIP TYPE CARBON RESISTOR	RN72K1J-220JE	1	435032204R1	NSP
R3260	CHIP TYPE CARBON RESISTOR	RN72K1J-103JE	1	435031034R1	NSP
R3263	CHIP TYPE CARBON RESISTOR	RN72K1J-101JE	1	435031014R1	NSP
R3264	CHIP TYPE CARBON RESISTOR	RN72K1J-101JE	1	435031014R1	NSP
R3265	CHIP TYPE CARBON RESISTOR	RN72K1J-101JE	1	435031014R1	NSP
R3270	CHIP TYPE CARBON RESISTOR	RN72K1J-220JE	1	435032204R1	NSP
R3271	CHIP TYPE CARBON RESISTOR	RN72K1J-220JE	1	435032204R1	NSP
R3276	CHIP TYPE CARBON RESISTOR	RN72K1J-470JE	1	435034704R1	NSP
R3277	CHIP TYPE CARBON RESISTOR	RN72K1J-470JE	1	435034704R1	NSP
R3278	CHIP TYPE CARBON RESISTOR	RN72K1J-470JE	1	435034704R1	NSP
R3279	CHIP TYPE CARBON RESISTOR	RN72K1J-470JE	1	435034704R1	NSP
R3280	CHIP TYPE CARBON RESISTOR	RN72K1J-470JE	1	435034704R1	NSP
R3281	CHIP TYPE CARBON RESISTOR	RN72K1J-470JE	1	435034704R1	NSP
R3296	CHIP TYPE CARBON RESISTOR	RN72K1J-103JE	1	435031034R1	NSP
R3297	CHIP TYPE CARBON RESISTOR	RN72K1J-103JE	1	435031034R1	NSP
R3298	CHIP TYPE CARBON RESISTOR	RN72K1J-103JE	1	435031034R1	NSP
R3299	CHIP TYPE CARBON RESISTOR	RN72K1J-103JE	1	435031034R1	NSP
R3300	CHIP TYPE CARBON RESISTOR	RN72K1J-103JE	1	435031034R1	NSP
R3301	CHIP TYPE CARBON RESISTOR	RN72K1J-103JE	1	435031034R1	NSP
R3302	CHIP TYPE CARBON RESISTOR	RN72K1J-103JE	1	435031034R1	NSP
R3303	CHIP TYPE CARBON RESISTOR	RN72K1J-103JE	1	435031034R1	NSP
R3305	CHIP TYPE CARBON RESISTOR	RN72K1J-103JE	1	435031034R1	NSP
R3307	CHIP TYPE CARBON RESISTOR	RN72K1J-183JE	1	435031834R1	NSP
R3310	CHIP TYPE CARBON RESISTOR	RN72K1J-183JE	1	435031834R1	NSP
R3311	CHIP TYPE CARBON RESISTOR	RN72K1J-183JE	1	435031834R1	NSP
R3320	CHIP TYPE CARBON RESISTOR	RN72K1J-183JE	1	435031834R1	NSP
R3322	CHIP TYPE CARBON RESISTOR	RN72K1J-470JE	1	435034704R1	NSP
R3323	CHIP TYPE CARBON RESISTOR	RN72K1J-470JE	1	435034704R1	NSP
R3324	CHIP TYPE CARBON RESISTOR	RN72K1J-220JE	1	435032204R1	NSP
R3325	CHIP RESISTOR NETWORK	MNR04MRAPJ470	1	43464747004R2	NSP
R3325or	CHIP RESISTOR NETWORK	YCN104-470-JK	(1)	43464C47004R1	NSP
R3326	CHIP TYPE CARBON RESISTOR	RN72K1J-470JE	1	435034704R1	NSP
R3327	CHIP TYPE CARBON RESISTOR	RN72K1J-470JE	1	435034704R1	NSP
R3328	CHIP TYPE CARBON RESISTOR	RN72K1J-470JE	1	435034704R1	NSP
R3329	CHIP TYPE CARBON RESISTOR	RN72K1J-470JE	1	435034704R1	NSP
R3330	CHIP TYPE CARBON RESISTOR	RN72K1J-220JE	1	435032204R1	NSP
R3331	CHIP TYPE CARBON RESISTOR	RN72K1J-220JE	1	435032204R1	NSP
R3332	CHIP TYPE CARBON RESISTOR	RN72K1J-470JE	1	435034704R1	NSP
R3333	CHIP TYPE CARBON RESISTOR	RN72K1J-470JE	1	435034704R1	NSP

R3334	CHIP TYPE CARBON RESISTOR	RN72K1J-470JE	1	435034704R1	NSP
R3335	CHIP TYPE CARBON RESISTOR	RN72K1J-470JE	1	435034704R1	NSP
R3336	CHIP TYPE CARBON RESISTOR	RN72K1J-470JE	1	435034704R1	NSP
R3337	CHIP TYPE CARBON RESISTOR	RN72K1J-470JE	1	435034704R1	NSP
R3338	CHIP TYPE CARBON RESISTOR	RN72K1J-470JE	1	435034704R1	NSP
R3339	CHIP TYPE CARBON RESISTOR	RN72K1J-470JE	1	435034704R1	NSP
R3340	CHIP TYPE CARBON RESISTOR	RN72K1J-470JE	1	435034704R1	NSP
R3341	CHIP TYPE CARBON RESISTOR	RN72K1J-470JE	1	435034704R1	NSP
R3342	CHIP TYPE CARBON RESISTOR	RN72K1J-470JE	1	435034704R1	NSP
R3343	CHIP TYPE CARBON RESISTOR	RN72K1J-470JE	1	435034704R1	NSP
R3344	CHIP TYPE CARBON RESISTOR	RN72K1J-470JE	1	435034704R1	NSP
R3345	CHIP TYPE CARBON RESISTOR	RN72K1J-220JE	1	435032204R1	NSP
R3346	CHIP TYPE CARBON RESISTOR	RN72K1J-470JE	1	435034704R1	NSP
R3347	CHIP TYPE CARBON RESISTOR	RN72K1J-103JE	1	435031034R1	NSP
R3348	CHIP TYPE CARBON RESISTOR	RN72K1J-470JE	1	435034704R1	NSP
R3349	CHIP TYPE CARBON RESISTOR	RN72K1J-472JE	1	435034724R1	NSP
R3350	CHIP TYPE CARBON RESISTOR	RN72K1J-472JE	1	435034724R1	NSP
R3351	CHIP RESISTOR NETWORK	MNR04MRAPJ103	1	43464710304R2	NSP
R3351or	CHIP RESISTOR NETWORK	YCN104-103-JK	(1)	43464C10304R1	NSP
R3352	CHIP RESISTOR NETWORK	MNR04MRAPJ103	1	43464710304R2	NSP
R3352or	CHIP RESISTOR NETWORK	YCN104-103-JK	(1)	43464C10304R1	NSP
R3353	CHIP RESISTOR NETWORK	MNR04MRAPJ220	1	43464722004R2	NSP
R3353or	CHIP RESISTOR NETWORK	YCN104-220-JK	(1)	43464C22004R1	NSP
R3354	CHIP RESISTOR NETWORK	MNR04MRAPJ220	1	43464722004R2	NSP
R3354or	CHIP RESISTOR NETWORK	YCN104-220-JK	(1)	43464C22004R1	NSP
R3355	CHIP RESISTOR NETWORK	MNR04MRAPJ220	1	43464722004R2	NSP
R3355or	CHIP RESISTOR NETWORK	YCN104-220-JK	(1)	43464C22004R1	NSP
R3356	CHIP RESISTOR NETWORK	MNR04MRAPJ220	1	43464722004R2	NSP
R3356or	CHIP RESISTOR NETWORK	YCN104-220-JK	(1)	43464C22004R1	NSP
R3357	CHIP TYPE CARBON RESISTOR	RN72K1J-103JE	1	435031034R1	NSP
R3358	CHIP TYPE CARBON RESISTOR	RN72K1J-103JE	1	435031034R1	NSP
R3360	CHIP TYPE CARBON RESISTOR	RN72K1J-472JE	1	435034724R1	NSP
R3361	CHIP TYPE CARBON RESISTOR	RN72K1J-103JE	1	435031034R1	NSP
R3367	CHIP TYPE CARBON RESISTOR	RN72K1J-470JE	1	435034704R1	NSP
R3369	CHIP TYPE CARBON RESISTOR	RN72K1J-472JE	1	435034724R1	NSP
R3373	CHIP TYPE CARBON RESISTOR	RN72K1J-472JE	1	435034724R1	NSP
R3377	CHIP TYPE CARBON RESISTOR	RN72K1J-000JE	1	435030004R1	NSP
R3400	CHIP TYPE CARBON RESISTOR	RN72K1J-103JE	1	435031034R1	NSP
R3401	CHIP TYPE CARBON RESISTOR	RN72K1J-470JE	1	435034704R1	NSP
R3403	CHIP TYPE CARBON RESISTOR	RN72K1J-221JE	1	435032214R1	NSP
R3404	CHIP TYPE CARBON RESISTOR	RN72K1J-470JE	1	435034704R1	NSP
R3405	CHIP TYPE CARBON RESISTOR	RN72K1J-470JE	1	435034704R1	NSP
R3406	CHIP TYPE CARBON RESISTOR	RN72K1J-332JE	1	435033324R1	NSP
R3407	CHIP TYPE CARBON RESISTOR	RN72K1J-222JE	1	435032224R1	NSP
R3408	CHIP RESISTOR NETWORK	MNR04MRAPJ221	1	43464722104R2	NSP
R3408or	CHIP RESISTOR NETWORK	YCN104-221-JK	(1)	43464C22104R1	NSP
R3409	CHIP RESISTOR NETWORK	MNR04MRAPJ221	1	43464722104R2	NSP
R3409or	CHIP RESISTOR NETWORK	YCN104-221-JK	(1)	43464C22104R1	NSP
R3410	CHIP TYPE CARBON RESISTOR	RN72K1J-220JE	1	435032204R1	NSP
R3411	CHIP RESISTOR NETWORK	MNR04MRAPJ000	1	43464700004R2	NSP
R3411or	CHIP RESISTOR NETWORK	YCN104-000-ZK	(1)	43484C00004R1	NSP
R3412	CHIP TYPE CARBON RESISTOR	RN72K1J-472JE	1	435034724R1	NSP
R3413	CHIP TYPE CARBON RESISTOR	RN72K1J-470JE	1	435034704R1	NSP
R3414	CHIP TYPE CARBON RESISTOR	RN72K1J-103JE	1	435031034R1	NSP
R3415	CHIP RESISTOR NETWORK	MNR04MRAPJ000	1	43464700004R2	NSP

R3415or	CHIP RESISTOR NETWORK	YCN104-000-ZK	(1)	43484C00004R1	NSP
R3416	CHIP TYPE CARBON RESISTOR	RN72K1J-151JE	1	435031514R1	NSP
R3417	CHIP TYPE CARBON RESISTOR	RN72K1J-470JE	1	435034704R1	NSP
R3418	CHIP TYPE CARBON RESISTOR	RN72K1J-103JE	1	435031034R1	NSP
R3421	CHIP TYPE CARBON RESISTOR	RN72K1J-470JE	1	435034704R1	NSP
R3424	CHIP TYPE CARBON RESISTOR	RN72K1J-470JE	1	435034704R1	NSP
R3425	CHIP TYPE CARBON RESISTOR	RN72K1J-470JE	1	435034704R1	NSP
R3428	CHIP TYPE CARBON RESISTOR	RN72K1J-472JE	1	435034724R1	NSP
R3429	CHIP RESISTOR NETWORK	MNR04MRAPJ470	1	43464747004R2	NSP
R3429or	CHIP RESISTOR NETWORK	YCN104-470-JK	(1)	43464C47004R1	NSP
R3430	CHIP RESISTOR NETWORK	MNR04MRAPJ470	1	43464747004R2	NSP
R3430or	CHIP RESISTOR NETWORK	YCN104-470-JK	(1)	43464C47004R1	NSP
R3433	CHIP TYPE CARBON RESISTOR	RN72K1J-103JE	1	435031034R1	NSP
R3434	CHIP TYPE CARBON RESISTOR	RN72K1J-332JE	1	435033324R1	NSP
R3435	CHIP TYPE CARBON RESISTOR	RN72K1J-222JE	1	435032224R1	NSP
R3436	CHIP TYPE CARBON RESISTOR	RN72K1J-220JE	1	435032204R1	NSP
R3437	CHIP TYPE CARBON RESISTOR	RN72K1J-470JE	1	435034704R1	NSP
R3438	CHIP TYPE CARBON RESISTOR	RN72K1J-470JE	1	435034704R1	NSP
R3439	CHIP TYPE CARBON RESISTOR	RN72K1J-332JE	1	435033324R1	NSP
R3440	CHIP TYPE CARBON RESISTOR	RN72K1J-332JE	1	435033324R1	NSP
R3441	CHIP RESISTOR NETWORK	MNR04MRAPJ470	1	43464747004R2	NSP
R3441or	CHIP RESISTOR NETWORK	YCN104-470-JK	(1)	43464C47004R1	NSP
R3442	CHIP TYPE CARBON RESISTOR	RN72K1J-105JE	1	435031054R1	NSP
R3444	CHIP TYPE CARBON RESISTOR	RN72K1J-470JE	1	435034704R1	NSP
R3445	CHIP RESISTOR NETWORK	MNR04MRAPJ470	1	43464747004R2	NSP
R3445or	CHIP RESISTOR NETWORK	YCN104-470-JK	(1)	43464C47004R1	NSP
R3446	CHIP TYPE CARBON RESISTOR	RN72K1J-102JE	1	435031024R1	NSP
R3447	CHIP TYPE CARBON RESISTOR	RN72K1J-470JE	1	435034704R1	NSP
R3448	CHIP TYPE CARBON RESISTOR	RN72K1J-470JE	1	435034704R1	NSP
R3450	CHIP TYPE CARBON RESISTOR	RN72K1J-470JE	1	435034704R1	NSP
R3452	CHIP TYPE CARBON RESISTOR	RN72K1J-470JE	1	435034704R1	NSP
R3453	CHIP TYPE CARBON RESISTOR	RN72K1J-221JE	1	435032214R1	NSP
R3454	CHIP TYPE CARBON RESISTOR	RN72K1J-470JE	1	435034704R1	NSP
R3455	CHIP TYPE CARBON RESISTOR	RN72K1J-101JE	1	435031014R1	NSP
R3456	CHIP TYPE CARBON RESISTOR	RN72K1J-470JE	1	435034704R1	NSP
R3457	CHIP RESISTOR NETWORK	MNR04MRAPJ470	1	43464747004R2	NSP
R3457or	CHIP RESISTOR NETWORK	YCN104-470-JK	(1)	43464C47004R1	NSP
R3462	CHIP TYPE CARBON RESISTOR	RN72K1J-102JE	1	435031024R1	NSP
R3464	CHIP TYPE CARBON RESISTOR	RN72K1J-102JE	1	435031024R1	NSP
R3465	CHIP TYPE CARBON RESISTOR	RN72K1J-102JE	1	435031024R1	NSP
R3466	CHIP TYPE CARBON RESISTOR	RN72K1J-102JE	1	435031024R1	NSP
R3469	CHIP TYPE CARBON RESISTOR	RN72K1J-222JE	1	435032224R1	NSP
R3470	CHIP TYPE CARBON RESISTOR	RN72K1J-222JE	1	435032224R1	NSP
R3473	CHIP TYPE CARBON RESISTOR	RN72K1J-103JE	1	435031034R1	NSP
R3474	CHIP TYPE CARBON RESISTOR	RN72K1J-103JE	1	435031034R1	NSP
R3481	CHIP TYPE CARBON RESISTOR	RN72K1J-332JE	1	435033324R1	NSP
R3484	CHIP TYPE CARBON RESISTOR	RN72K1J-470JE	1	435034704R1	NSP
R3485	CHIP TYPE CARBON RESISTOR	RN72K1J-470JE	1	435034704R1	NSP
R3488	CHIP TYPE CARBON RESISTOR	RN72K1J-332JE	1	435033324R1	NSP
R3491	CHIP TYPE CARBON RESISTOR	RN72K1J-332JE	1	435033324R1	NSP
R3494	CHIP RESISTOR NETWORK	MNR04MRAPJ470	1	43464747004R2	NSP
R3494or	CHIP RESISTOR NETWORK	YCN104-470-JK	(1)	43464C47004R1	NSP
R3495	CHIP RESISTOR NETWORK	MNR04MRAPJ470	1	43464747004R2	NSP
R3495or	CHIP RESISTOR NETWORK	YCN104-470-JK	(1)	43464C47004R1	NSP
R3496	CHIP RESISTOR NETWORK	MNR04MRAPJ470	1	43464747004R2	NSP

R3496or	CHIP RESISTOR NETWORK	YCN104-470-JK	(1)	43464C47004R1	NSP
R3497	CHIP RESISTOR NETWORK	MNR04MRAPJ470	1	43464747004R2	NSP
R3497or	CHIP RESISTOR NETWORK	YCN104-470-JK	(1)	43464C47004R1	NSP
R3500	CHIP TYPE CARBON RESISTOR	RN72K1J-470JE	1	435034704R1	NSP
R3501	CHIP TYPE CARBON RESISTOR	RN72K1J-470JE	1	435034704R1	NSP
R3502	CHIP TYPE CARBON RESISTOR	RN72K1J-470JE	1	435034704R1	NSP
R3503	CHIP TYPE CARBON RESISTOR	RN72K1J-470JE	1	435034704R1	NSP
R3504	CHIP TYPE CARBON RESISTOR	RN72K1J-470JE	1	435034704R1	NSP
R3505	CHIP TYPE CARBON RESISTOR	RN72K1J-470JE	1	435034704R1	NSP
R3601	CHIP TYPE CARBON RESISTOR	RN72K1J-103JE	1	435031034R1	NSP
R3603	CHIP TYPE CARBON RESISTOR	RN72K1J-103JE	1	435031034R1	NSP
R3604	CHIP TYPE CARBON RESISTOR	RN72K1J-103JE	1	435031034R1	NSP
R3605	CHIP TYPE CARBON RESISTOR	RN72K1J-102JE	1	435031024R1	NSP
R3652	CHIP TYPE CARBON RESISTOR	RN72K1J-220JE	1	435032204R1	NSP
R3653	CHIP TYPE CARBON RESISTOR	RN72K1J-102JE	1	435031024R1	NSP
R3654	CHIP TYPE CARBON RESISTOR	RN72K1J-102JE	1	435031024R1	NSP
R3657	CHIP TYPE CARBON RESISTOR	RN72K1J-220JE	1	435032204R1	NSP
R3658	CHIP TYPE CARBON RESISTOR	RN72K1J-391FE	1	435033912R1	NSP
R3659	CHIP TYPE CARBON RESISTOR	RN72K1J-222FE	1	435032222R1	NSP
R3660	CHIP TYPE CARBON RESISTOR	RN72K1J-392FE	1	435033922R1	NSP
R3661	CHIP TYPE CARBON RESISTOR	RN72K1J-220JE	1	435032204R1	NSP
R3662	CHIP TYPE CARBON RESISTOR	RN72K1J-220JE	1	435032204R1	NSP
R3663	CHIP TYPE CARBON RESISTOR	RN72K1J-472JE	1	435034724R1	NSP
R3664	CHIP TYPE CARBON RESISTOR	RN72K1J-220JE	1	435032204R1	NSP
R3666	CHIP TYPE CARBON RESISTOR	RN72K1J-220JE	1	435032204R1	NSP
R3667	CHIP TYPE CARBON RESISTOR	RN72K1J-470JE	1	435034704R1	NSP
R3668	CHIP TYPE CARBON RESISTOR	RN72K1J-472JE	1	435034724R1	NSP
R3669	CHIP TYPE CARBON RESISTOR	RN72K1J-472JE	1	435034724R1	NSP
R3670	CHIP TYPE CARBON RESISTOR	RN72K1J-472JE	1	435034724R1	NSP
R3671	CHIP TYPE CARBON RESISTOR	RN72K1J-472JE	1	435034724R1	NSP
R3674	CHIP TYPE CARBON RESISTOR	RN72K1J-224JE	1	435032244R1	NSP
R3675	CHIP TYPE CARBON RESISTOR	RN72K1J-102JE	1	435031024R1	NSP
R3676	CHIP TYPE CARBON RESISTOR	RN72K1J-561JE	1	435035614R1	NSP
R3678	CHIP TYPE CARBON RESISTOR	RN72K1J-472JE	1	435034724R1	NSP
R3679	CHIP TYPE CARBON RESISTOR	RN72K1J-472JE	1	435034724R1	NSP
R3692	CHIP TYPE CARBON RESISTOR	RN72K1J-470JE	1	435034704R1	NSP
R3693	CHIP TYPE CARBON RESISTOR	RN72K1J-470JE	1	435034704R1	NSP
R3694	CHIP TYPE CARBON RESISTOR	RN72K1J-470JE	1	435034704R1	NSP
R3695	CHIP TYPE CARBON RESISTOR	RN72K1J-470JE	1	435034704R1	NSP
R3696	CHIP TYPE CARBON RESISTOR	RN72K1J-470JE	1	435034704R1	NSP
R3697	CHIP TYPE CARBON RESISTOR	RN72K1J-470JE	1	435034704R1	NSP
R3699	CHIP TYPE CARBON RESISTOR	RN72K1J-470JE	1	435034704R1	NSP
R3700	CHIP TYPE CARBON RESISTOR	RN72K1J-470JE	1	435034704R1	NSP
R3701	CHIP TYPE CARBON RESISTOR	RN72K1J-470JE	1	435034704R1	NSP
R3702	CHIP TYPE CARBON RESISTOR	RN72K1J-470JE	1	435034704R1	NSP
R3703	CHIP TYPE CARBON RESISTOR	RN72K1J-470JE	1	435034704R1	NSP
R3709	CHIP TYPE CARBON RESISTOR	RN72K1J-220JE	1	435032204R1	NSP
R3710	CHIP TYPE CARBON RESISTOR	RN72K1J-220JE	1	435032204R1	NSP
R3711	CHIP TYPE CARBON RESISTOR	RN72K1J-220JE	1	435032204R1	NSP
R3712	CHIP TYPE CARBON RESISTOR	RN72K1J-103JE	1	435031034R1	NSP
R3713	CHIP TYPE CARBON RESISTOR	RN72K1J-220JE	1	435032204R1	NSP
R3715	CHIP TYPE CARBON RESISTOR	RN72K1J-472JE	1	435034724R1	NSP
R3724	CHIP TYPE CARBON RESISTOR	RN72K1J-000JE	1	435030004R1	NSP
R3728	CHIP TYPE CARBON RESISTOR	RN72K1J-103JE	1	435031034R1	NSP
R3729	CHIP TYPE CARBON RESISTOR	RN72K1J-470JE	1	435034704R1	NSP

R3731	CHIP TYPE CARBON RESISTOR	RN72K1J-220JE	1	435032204R1	NSP
R3732	CHIP TYPE CARBON RESISTOR	RN72K1J-103JE	1	435031034R1	NSP
R3733	CHIP TYPE CARBON RESISTOR	RN72K1J-103JE	1	435031034R1	NSP
R3734	CHIP TYPE CARBON RESISTOR	RN72K1J-103JE	1	435031034R1	NSP
R3735	CHIP TYPE CARBON RESISTOR	RN72K1J-103JE	1	435031034R1	NSP
R3737	CHIP TYPE CARBON RESISTOR	RN72K1J-220JE	1	435032204R1	NSP
R3739	CHIP TYPE CARBON RESISTOR	RN72K1J-220JE	1	435032204R1	NSP
R3741	CHIP TYPE CARBON RESISTOR	RN72K1J-220JE	1	435032204R1	NSP
R3743	CHIP TYPE CARBON RESISTOR	RN72K1J-220JE	1	435032204R1	NSP
R3744	CHIP TYPE CARBON RESISTOR	RN72K1J-220JE	1	435032204R1	NSP
R3745	CHIP TYPE CARBON RESISTOR	RN72K1J-220JE	1	435032204R1	NSP
R3746	CHIP TYPE CARBON RESISTOR	RN72K1J-220JE	1	435032204R1	NSP
R3747	CHIP TYPE CARBON RESISTOR	RN72K1J-220JE	1	435032204R1	NSP
R3748	CHIP TYPE CARBON RESISTOR	RN72K1J-220JE	1	435032204R1	NSP
R3749	CHIP TYPE CARBON RESISTOR	RN72K1J-220JE	1	435032204R1	NSP
R3750	CHIP TYPE CARBON RESISTOR	RN72K1J-220JE	1	435032204R1	NSP
R3751	CHIP TYPE CARBON RESISTOR	RN72K1J-220JE	1	435032204R1	NSP
R3752	CHIP TYPE CARBON RESISTOR	RN72K1J-220JE	1	435032204R1	NSP
R3753	CHIP TYPE CARBON RESISTOR	RN72K1J-103JE	1	435031034R1	NSP
R3754	CHIP TYPE CARBON RESISTOR	RN72K1J-103JE	1	435031034R1	NSP
R3756	CHIP TYPE CARBON RESISTOR	RN72K1J-102JE	1	435031024R1	NSP
R3758	CHIP TYPE CARBON RESISTOR	RN72K1J-000JE	1	435030004R1	NSP
R3902	CHIP TYPE CARBON RESISTOR	RN72K1J-103JE	1	435031034R1	NSP
R3903	CHIP TYPE CARBON RESISTOR	RN72K1J-103JE	1	435031034R1	NSP
R3904	CHIP TYPE CARBON RESISTOR	RN72K1J-122JE	1	435031224R1	NSP
R3905	CHIP TYPE CARBON RESISTOR	RN72K1J-122JE	1	435031224R1	NSP
R3906	CHIP TYPE CARBON RESISTOR	RN72K1J-103JE	1	435031034R1	NSP
R3908	CHIP TYPE CARBON RESISTOR	RN72K1J-103JE	1	435031034R1	NSP
R3911	CHIP TYPE CARBON RESISTOR	RN72K1J-000JE	1	435030004R1	NSP
R3920	CHIP TYPE CARBON RESISTOR	RN72K1J-470JE	1	435034704R1	NSP
R7000	CHIP TYPE CARBON RESISTOR	RN72K1J-472JE	1	435034724R1	NSP
R7001	CHIP RESISTOR NETWORK	MNR04MRAPJ470	1	43464747004R2	NSP
R7001or	CHIP RESISTOR NETWORK	YCN104-470-JK	(1)	43464C47004R1	NSP
R7002	CHIP TYPE CARBON RESISTOR	RN72K1J-103JE	1	435031034R1	NSP
R7003	CHIP TYPE CARBON RESISTOR	RN72K1J-103JE	1	435031034R1	NSP
R7004	CHIP TYPE CARBON RESISTOR	RN72K1J-472JE	1	435034724R1	NSP
R7005	CHIP TYPE CARBON RESISTOR	RN72K1J-223JE	1	435032234R1	NSP
R7006	CHIP TYPE CARBON RESISTOR	RN72K1J-223JE	1	435032234R1	NSP
R7007	CHIP TYPE CARBON RESISTOR	RN72K1J-105JE	1	435031054R1	NSP
R7008	CHIP TYPE CARBON RESISTOR	RN72K1J-473JE	1	435034734R1	NSP
R7009	CHIP TYPE CARBON RESISTOR	RN72K1J-105JE	1	435031054R1	NSP
R7010	CHIP TYPE CARBON RESISTOR	RN72K1J-330JE	1	435033304R1	NSP
R7011	CHIP TYPE CARBON RESISTOR	RN72K1J-103JE	1	435031034R1	NSP
R7012	CHIP TYPE CARBON RESISTOR	RN72K1J-103JE	1	435031034R1	NSP
R7013	CHIP TYPE CARBON RESISTOR	RN72K1J-103JE	1	435031034R1	NSP
R7014	CHIP TYPE CARBON RESISTOR	RN72K1J-473JE	1	435034734R1	NSP
R7015	CHIP TYPE CARBON RESISTOR	RN72K1J-473JE	1	435034734R1	NSP
R7016	CHIP TYPE CARBON RESISTOR	RN72K1J-473JE	1	435034734R1	NSP
R7017	CHIP RESISTOR NETWORK	MNR04MRAPJ472	1	43464747204R2	NSP
R7017or	CHIP RESISTOR NETWORK	YCN104-472-JK	(1)	43464C47204R1	NSP
R7018	CHIP TYPE CARBON RESISTOR	RN72K1J-221JE	1	435032214R1	NSP
R7019	CHIP RESISTOR NETWORK	MNR04MRAPJ221	1	43464722104R2	NSP
R7019or	CHIP RESISTOR NETWORK	YCN104-221-JK	(1)	43464C22104R1	NSP
R7020	CHIP TYPE CARBON RESISTOR	RN72K1J-221JE	1	435032214R1	NSP
R7021	CHIP RESISTOR NETWORK	MNR04MRAPJ221	1	43464722104R2	NSP

R7021or	CHIP RESISTOR NETWORK	YCN104-221-JK	(1)	43464C22104R1	NSP
R7022	CHIP TYPE CARBON RESISTOR	RN72K1J-470JE	1	435034704R1	NSP
R7023	CHIP TYPE CARBON RESISTOR	RN72K1J-224JE	1	435032244R1	NSP
R7024	CHIP TYPE CARBON RESISTOR	RN72K1J-470JE	1	435034704R1	NSP
R7025	CHIP TYPE CARBON RESISTOR	RN72K1J-224JE	1	435032244R1	NSP
R7026	CHIP TYPE CARBON RESISTOR	RN72K1J-224JE	1	435032244R1	NSP
R7027	CHIP TYPE CARBON RESISTOR	RN72K1J-470JE	1	435034704R1	NSP
R7028	CHIP TYPE CARBON RESISTOR	RN72K1J-470JE	1	435034704R1	NSP
R7029	CHIP TYPE CARBON RESISTOR	RN72K1J-102JE	1	435031024R1	NSP
R7030	CHIP TYPE CARBON RESISTOR	RN72K1J-221JE	1	435032214R1	NSP
R7031	CHIP RESISTOR NETWORK	MNR04MRAPJ221	1	43464722104R2	NSP
R7031or	CHIP RESISTOR NETWORK	YCN104-221-JK	(1)	43464C22104R1	NSP
R7032	CHIP TYPE CARBON RESISTOR	RN72K1J-470JE	1	435034704R1	NSP
R7033	CHIP RESISTOR NETWORK	MNR04MRAPJ470	1	43464747004R2	NSP
R7033or	CHIP RESISTOR NETWORK	YCN104-470-JK	(1)	43464C47004R1	NSP
R7034	CHIP RESISTOR NETWORK	MNR04MRAPJ221	1	43464722104R2	NSP
R7034or	CHIP RESISTOR NETWORK	YCN104-221-JK	(1)	43464C22104R1	NSP
R7035	CHIP TYPE CARBON RESISTOR	RN72K1J-470JE	1	435034704R1	NSP
R7036	CHIP TYPE CARBON RESISTOR	RN72K1J-102JE	1	435031024R1	NSP
R7037	CHIP TYPE CARBON RESISTOR	RN72K1J-102JE	1	435031024R1	NSP
R7038	CHIP TYPE CARBON RESISTOR	RN72K1J-102JE	1	435031024R1	NSP
R7039	CHIP TYPE CARBON RESISTOR	RN72K1J-222JE	1	435032224R1	NSP
R7040	CHIP TYPE CARBON RESISTOR	RN72K1J-222JE	1	435032224R1	NSP
R7041	CHIP TYPE CARBON RESISTOR	RN72K1J-222JE	1	435032224R1	NSP
R7042	CHIP RESISTOR NETWORK	MNR04MRAPJ221	1	43464722104R2	NSP
R7042or	CHIP RESISTOR NETWORK	YCN104-221-JK	(1)	43464C22104R1	NSP
R7044	CHIP TYPE CARBON RESISTOR	RN72K1J-470JE	1	435034704R1	NSP
R7046	CHIP TYPE CARBON RESISTOR	RN72K1J-221JE	1	435032214R1	NSP
R7048	CHIP TYPE CARBON RESISTOR	RN72K1J-221JE	1	435032214R1	NSP
R7049	CHIP TYPE CARBON RESISTOR	RN72K1J-470JE	1	435034704R1	NSP
R7050	CHIP TYPE CARBON RESISTOR	RN72K1J-103JE	1	435031034R1	NSP
R7051	CHIP TYPE CARBON RESISTOR	RN72K1J-105JE	1	435031054R1	NSP
R7052	CHIP TYPE CARBON RESISTOR	RN72K1J-223JE	1	435032234R1	NSP
R7054	CHIP TYPE CARBON RESISTOR	RN72K1J-102JE	1	435031024R1	NSP
R7055	CHIP TYPE CARBON RESISTOR	RN72K1J-102JE	1	435031024R1	NSP
R7056	CHIP TYPE CARBON RESISTOR	RN72K1J-102JE	1	435031024R1	NSP
R7059	CHIP TYPE CARBON RESISTOR	RN72K1J-224JE	1	435032244R1	NSP
R7060	CHIP TYPE CARBON RESISTOR	RN72K1J-473JE	1	435034734R1	NSP
R7061	CHIP RESISTOR NETWORK	MNR04MRAPJ221	1	43464722104R2	NSP
R7061or	CHIP RESISTOR NETWORK	YCN104-221-JK	(1)	43464C22104R1	NSP
R7063	CHIP TYPE CARBON RESISTOR	RN72K1J-330JE	1	435033304R1	NSP
R7064	CHIP TYPE CARBON RESISTOR	RN72K1J-222JE	1	435032224R1	NSP
R7065	CHIP TYPE CARBON RESISTOR	RN72K1J-473JE	1	435034734R1	NSP
R7066	CHIP TYPE CARBON RESISTOR	RN72K1J-470JE	1	435034704R1	NSP
R7069	CHIP RESISTOR NETWORK	MNR04MRAPJ470	1	43464747004R2	NSP
R7069or	CHIP RESISTOR NETWORK	YCN104-470-JK	(1)	43464C47004R1	NSP
R7070	CHIP RESISTOR NETWORK	MNR04MRAPJ221	1	43464722104R2	NSP
R7070or	CHIP RESISTOR NETWORK	YCN104-221-JK	(1)	43464C22104R1	NSP
R7071	CHIP TYPE CARBON RESISTOR	RN72K1J-103JE	1	435031034R1	NSP
R7072	CHIP TYPE CARBON RESISTOR	RN72K1J-470JE	1	435034704R1	NSP
R7073	CHIP TYPE CARBON RESISTOR	RN72K1J-102JE	1	435031024R1	NSP
R7074	CHIP TYPE CARBON RESISTOR	RN72K1J-470JE	1	435034704R1	NSP
R7075	CHIP RESISTOR NETWORK	MNR04MRAPJ470	1	43464747004R2	NSP
R7075or	CHIP RESISTOR NETWORK	YCN104-470-JK	(1)	43464C47004R1	NSP
R7076	CHIP TYPE CARBON RESISTOR	RN72K1J-221JE	1	435032214R1	NSP

R7077	CHIP TYPE CARBON RESISTOR	RN72K1J-103JE	1	435031034R1	NSP
R7078	CHIP TYPE CARBON RESISTOR	RN72K1J-103JE	1	435031034R1	NSP
R7079	CHIP RESISTOR NETWORK	MNR04MRAPJ221	1	43464722104R2	NSP
R7079or	CHIP RESISTOR NETWORK	YCN104-221-JK	(1)	43464C22104R1	NSP
R7080	CHIP TYPE CARBON RESISTOR	RN72K1J-103JE	1	435031034R1	NSP
R7081	CHIP RESISTOR NETWORK	MNR04MRAPJ221	1	43464722104R2	NSP
R7081or	CHIP RESISTOR NETWORK	YCN104-221-JK	(1)	43464C22104R1	NSP
R7082	CHIP TYPE CARBON RESISTOR	RN72K1J-104JE	1	435031044R1	NSP
R7083	CHIP TYPE CARBON RESISTOR	RN72K1J-332JE	1	435033324R1	NSP
R7084	CHIP TYPE CARBON RESISTOR	RN72K1J-331JE	1	435033314R1	NSP
R7086	CHIP TYPE CARBON RESISTOR	RN72K1J-330JE	1	435033304R1	NSP
R7087	CHIP TYPE CARBON RESISTOR	RN72K1J-273JE	1	435032734R1	NSP
R7088	CHIP TYPE CARBON RESISTOR	RN72K1J-330JE	1	435033304R1	NSP
R7089	CHIP TYPE CARBON RESISTOR	RN72K1J-330JE	1	435033304R1	NSP
R7090	CHIP TYPE CARBON RESISTOR	RN72K1J-330JE	1	435033304R1	NSP
R7091	CHIP TYPE CARBON RESISTOR	RN72K1J-221JE	1	435032214R1	NSP
R7092	CHIP TYPE CARBON RESISTOR	RN72K1J-470JE	1	435034704R1	NSP
R7093	CHIP TYPE CARBON RESISTOR	RN72K1J-472JE	1	435034724R1	NSP
R7094	CHIP TYPE CARBON RESISTOR	RN72K1J-472JE	1	435034724R1	NSP
R7095	CHIP RESISTOR NETWORK	MNR04MRAPJ221	1	43464722104R2	NSP
R7095or	CHIP RESISTOR NETWORK	YCN104-221-JK	(1)	43464C22104R1	NSP
R7097	CHIP TYPE CARBON RESISTOR	RN72K1J-470JE	1	435034704R1	NSP
R7098	CHIP RESISTOR NETWORK	MNR04MRAPJ221	1	43464722104R2	NSP
R7098or	CHIP RESISTOR NETWORK	YCN104-221-JK	(1)	43464C22104R1	NSP
R7099	CHIP RESISTOR NETWORK	MNR04MRAPJ470	1	43464747004R2	NSP
R7099or	CHIP RESISTOR NETWORK	YCN104-470-JK	(1)	43464C47004R1	NSP
R7100	CHIP TYPE CARBON RESISTOR	RN72K1J-104JE	1	435031044R1	NSP
R7101	CHIP TYPE CARBON RESISTOR	RN72K1J-221JE	1	435032214R1	NSP
R7102	CHIP TYPE CARBON RESISTOR	RN72K1J-331JE	1	435033314R1	NSP
R7103	CHIP TYPE CARBON RESISTOR	RN72K1J-221JE	1	435032214R1	NSP
R7104	CHIP TYPE CARBON RESISTOR	RN72K1J-470JE	1	435034704R1	NSP
R7105	CHIP RESISTOR NETWORK	MNR04MRAPJ470	1	43464747004R2	NSP
R7105or	CHIP RESISTOR NETWORK	YCN104-470-JK	(1)	43464C47004R1	NSP
R7106	CHIP TYPE CARBON RESISTOR	RN72K1J-473JE	1	435034734R1	NSP
R7108	CHIP RESISTOR NETWORK	MNR04MRAPJ103	1	43464710304R2	NSP
R7108or	CHIP RESISTOR NETWORK	YCN104-103-JK	(1)	43464C10304R1	NSP
R7109	CHIP TYPE CARBON RESISTOR	RN72K1J-331JE	1	435033314R1	NSP
R7110	CHIP TYPE CARBON RESISTOR	RN72K1J-103JE	1	435031034R1	NSP
R7111	CHIP TYPE CARBON RESISTOR	RN72K1J-103JE	1	435031034R1	NSP
R7112	CHIP TYPE CARBON RESISTOR	RN72K1J-103JE	1	435031034R1	NSP
R7113	CHIP TYPE CARBON RESISTOR	RN72K1J-470JE	1	435034704R1	NSP
R7114	CHIP TYPE CARBON RESISTOR	RN72K1J-103JE	1	435031034R1	NSP
R7115	CHIP TYPE CARBON RESISTOR	RN72K1J-103JE	1	435031034R1	NSP
R7116	CHIP TYPE CARBON RESISTOR	RN72K1J-047JE	1	435030474R1	NSP
R7117	CHIP TYPE CARBON RESISTOR	RN72K1J-103JE	1	435031034R1	NSP
R7120	CHIP TYPE CARBON RESISTOR	RN72K1J-103JE	1	435031034R1	NSP
R7121	CHIP TYPE CARBON RESISTOR	RN72K1J-105JE	1	435031054R1	NSP
R7122	CHIP TYPE CARBON RESISTOR	RN72K1J-105JE	1	435031054R1	NSP
R7123	CHIP RESISTOR NETWORK	MNR04MRAPJ221	1	43464722104R2	NSP
R7123or	CHIP RESISTOR NETWORK	YCN104-221-JK	(1)	43464C22104R1	NSP
R7124	CHIP TYPE CARBON RESISTOR	RN72K1J-000JE	1	435030004R1	NSP
R7125	CHIP TYPE CARBON RESISTOR	RN72K1J-473JE	1	435034734R1	NSP
R7126	CHIP TYPE CARBON RESISTOR	RN72K1J-103JE	1	435031034R1	NSP
R7127	CHIP TYPE CARBON RESISTOR	RN72K1J-333JE	1	435033334R1	NSP
R7128	CHIP TYPE CARBON RESISTOR	RN72K1J-000JE	1	435030004R1	NSP

R7132	CHIP TYPE CARBON RESISTOR	RN72K1J-331JE	1	435033314R1	NSP
R7133	CHIP TYPE CARBON RESISTOR	RN72K1J-221JE	1	435032214R1	NSP
R7134	CHIP TYPE CARBON RESISTOR	RN72K1J-221JE	1	435032214R1	NSP
R7135	CHIP TYPE CARBON RESISTOR	RN72K1J-103JE	1	435031034R1	NSP
R7136	CHIP TYPE CARBON RESISTOR	RN72K1J-470JE	1	435034704R1	NSP
R7137	CHIP TYPE CARBON RESISTOR	RN72K1J-221JE	1	435032214R1	NSP
R7138	CHIP TYPE CARBON RESISTOR	RN72K1J-470JE	1	435034704R1	NSP
R7140	CHIP TYPE CARBON RESISTOR	RN72K1J-103JE	1	435031034R1	NSP
R7141	CHIP TYPE CARBON RESISTOR	RN72K1J-103JE	1	435031034R1	NSP
R7142	CHIP TYPE CARBON RESISTOR	RN72K1J-470JE	1	435034704R1	NSP
R7148	CHIP TYPE CARBON RESISTOR	RN72K1J-000JE	1	435030004R1	NSP
R7161	CHIP TYPE CARBON RESISTOR	RN72K1J-103JE	1	435031034R1	NSP
R7170	CHIP TYPE CARBON RESISTOR	RN72K1J-102JE	1	435031024R1	NSP
R7171	CHIP TYPE CARBON RESISTOR	RN72K1J-473JE	1	435034734R1	NSP
R7172	CHIP TYPE CARBON RESISTOR	RN72K1J-222JE	1	435032224R1	NSP
R7180	CHIP TYPE CARBON RESISTOR	RN72K1J-272JE	1	435032724R1	NSP
R7181	CHIP TYPE CARBON RESISTOR	RN72K1J-272JE	1	435032724R1	NSP
R7182	CHIP TYPE CARBON RESISTOR	RN72K1J-272JE	1	435032724R1	NSP
R7183	CHIP TYPE CARBON RESISTOR	RN72K1J-272JE	1	435032724R1	NSP
R7184	CHIP TYPE CARBON RESISTOR	RN72K1J-103JE	1	435031034R1	NSP
R7186	CHIP TYPE CARBON RESISTOR	RN72K1J-104JE	1	435031044R1	NSP
R7187	CHIP TYPE CARBON RESISTOR	RN72K1J-104JE	1	435031044R1	NSP
R7188	CHIP TYPE CARBON RESISTOR	RN72K1J-104JE	1	435031044R1	NSP
R7193	CHIP TYPE CARBON RESISTOR	RN72K1J-470JE	1	435034704R1	NSP
R8011	CHIP TYPE CARBON RESISTOR	RN72K1J-473JE	1	435034734R1	NSP
R8012	CHIP TYPE CARBON RESISTOR	RN72K1J-473JE	1	435034734R1	NSP
R8013	CHIP TYPE CARBON RESISTOR	RN72K1J-473JE	1	435034734R1	NSP
R8021	CHIP TYPE CARBON RESISTOR	RN72K1J-182JE	1	435031824R1	NSP
R8022	CHIP TYPE CARBON RESISTOR	RN72K1J-182JE	1	435031824R1	NSP
R8023	CHIP TYPE CARBON RESISTOR	RN72K1J-100JE	1	435031004R1	NSP
R8024	CHIP TYPE CARBON RESISTOR	RN72K1J-473JE	1	435034734R1	NSP
R8025	CHIP TYPE CARBON RESISTOR	RN72K1J-560JE	1	435035604R1	NSP
R8026	CHIP TYPE CARBON RESISTOR	RN72K1J-560JE	1	435035604R1	NSP
R8030	CHIP TYPE CARBON RESISTOR	RN72K1J-473JE	1	435034734R1	NSP
R8037	CHIP TYPE CARBON RESISTOR	RN72K1J-102JE	1	435031024R1	NSP
R8038	CHIP TYPE CARBON RESISTOR	RN72K1J-102JE	1	435031024R1	NSP
R8204	CHIP TYPE CARBON RESISTOR	RN72K1J-330JE	1	435033304R1	NSP
R8208	CHIP TYPE CARBON RESISTOR	RN72K1J-561JE	1	435035614R1	NSP
R8209	CHIP TYPE CARBON RESISTOR	RN72K1J-472JE	1	435034724R1	NSP
R8215	CHIP TYPE CARBON RESISTOR	RN72K1J-561JE	1	435035614R1	NSP
R8218	CHIP TYPE CARBON RESISTOR	RN72K1J-561JE	1	435035614R1	NSP
R8220	CHIP TYPE CARBON RESISTOR	RN72K1J-471JE	1	435034714R1	NSP
R8221	CHIP TYPE CARBON RESISTOR	RN72K1J-471JE	1	435034714R1	NSP
R8223	CHIP TYPE CARBON RESISTOR	RN72K1J-471JE	1	435034714R1	NSP
R8233	CHIP TYPE CARBON RESISTOR	RN72K1J-000JE	1	435030004R1	NSP
R8237	CHIP TYPE CARBON RESISTOR	RN72K1J-105JE	1	435031054R1	NSP
R8238	CHIP TYPE CARBON RESISTOR	RN72K1J-331JE	1	435033314R1	NSP
R8240	CHIP TYPE CARBON RESISTOR	RN72K1J-681JE	1	435036814R1	NSP
R8243	CHIP TYPE CARBON RESISTOR	RN72K1J-681JE	1	435036814R1	NSP
R8244	CHIP TYPE CARBON RESISTOR	RN72K1J-330JE	1	435033304R1	NSP
R8300	CHIP TYPE CARBON RESISTOR	RN72K1J-222JE	1	435032224R1	NSP
R8301	CHIP TYPE CARBON RESISTOR	RN72K1J-222JE	1	435032224R1	NSP
R8302	CHIP TYPE CARBON RESISTOR	RN72K1J-473JE	1	435034734R1	NSP
R8303	CHIP RESISTOR NETWORK	MNR04MRAPJ220	1	43464722004R2	NSP
R8303or	CHIP RESISTOR NETWORK	YCN104-220-JK	(1)	43464C22004R1	NSP

R8304	CHIP RESISTOR NETWORK	MNR04MRAPJ220	1	43464722004R2	NSP
R8304or	CHIP RESISTOR NETWORK	YCN104-220-JK	(1)	43464C22004R1	NSP
R8305	CHIP TYPE CARBON RESISTOR	RN72K1J-473JE	1	435034734R1	NSP
R8306	CHIP TYPE CARBON RESISTOR	RN72K1J-473JE	1	435034734R1	NSP
R8307	CHIP TYPE CARBON RESISTOR	RN72K1J-100JE	1	435031004R1	NSP
R8308	CHIP TYPE CARBON RESISTOR	RN72K1J-100JE	1	435031004R1	NSP
R8309	CHIP TYPE CARBON RESISTOR	RN72K1J-100JE	1	435031004R1	NSP
R8310	CHIP TYPE CARBON RESISTOR	RN72K1J-100JE	1	435031004R1	NSP
R8311	CHIP TYPE CARBON RESISTOR	RN72K1J-100JE	1	435031004R1	NSP
R8312	CHIP TYPE CARBON RESISTOR	RN72K1J-100JE	1	435031004R1	NSP
R8313	CHIP TYPE CARBON RESISTOR	RN72K1J-100JE	1	435031004R1	NSP
R8314	CHIP TYPE CARBON RESISTOR	RN72K1J-100JE	1	435031004R1	NSP
R8315	CHIP TYPE CARBON RESISTOR	RN72K1J-100JE	1	435031004R1	NSP
R8316	CHIP TYPE CARBON RESISTOR	RN72K1J-100JE	1	435031004R1	NSP
R8317	CHIP TYPE CARBON RESISTOR	RN72K1J-103JE	1	435031034R1	NSP
R8318	CHIP TYPE CARBON RESISTOR	RN72K1J-103JE	1	435031034R1	NSP
R8319	CHIP TYPE CARBON RESISTOR	RN72K1J-102JE	1	435031024R1	NSP
R8320	CHIP TYPE CARBON RESISTOR	RN72K1J-103JE	1	435031034R1	NSP
R8321	CHIP TYPE CARBON RESISTOR	RN72K1J-330JE	1	435033304R1	NSP
R8322	CHIP TYPE CARBON RESISTOR	RN72K1J-330JE	1	435033304R1	NSP
R8323	CHIP TYPE CARBON RESISTOR	RN72K1J-330JE	1	435033304R1	NSP
R8324	CHIP TYPE CARBON RESISTOR	RN72K1J-330JE	1	435033304R1	NSP
R8325	CHIP TYPE CARBON RESISTOR	RN72K1J-000JE	1	435030004R1	NSP
R8326	CHIP TYPE CARBON RESISTOR	RN72K1J-102JE	1	435031024R1	NSP
R8327	CHIP TYPE CARBON RESISTOR	RN72K1J-103JE	1	435031034R1	NSP
R8328	CHIP TYPE CARBON RESISTOR	RN72K1J-272JE	1	435032724R1	NSP
R8329	CHIP TYPE CARBON RESISTOR	RN72K1J-472JE	1	435034724R1	NSP
R8330	CHIP TYPE CARBON RESISTOR	RN72K1J-100JE	1	435031004R1	NSP
R8331	CHIP TYPE CARBON RESISTOR	RN72K1J-103JE	1	435031034R1	NSP
R8332	CHIP TYPE CARBON RESISTOR	RN72K1J-472JE	1	435034724R1	NSP
R8333	CHIP TYPE CARBON RESISTOR	RN72K1J-221JE	1	435032214R1	NSP
R8334	CHIP TYPE CARBON RESISTOR	RN72K1J-105JE	1	435031054R1	NSP
R8335	CHIP TYPE CARBON RESISTOR	RN72K1J-330JE	1	435033304R1	NSP
R8336	CHIP TYPE CARBON RESISTOR	RN72K1J-330JE	1	435033304R1	NSP
R8337	CHIP TYPE CARBON RESISTOR	RN72K1J-473JE	1	435034734R1	NSP
R8338	CHIP TYPE CARBON RESISTOR	RN72K1J-330JE	1	435033304R1	NSP
R8339	CHIP TYPE CARBON RESISTOR	RN72K1J-330JE	1	435033304R1	NSP
R8340	CHIP TYPE CARBON RESISTOR	RN72K1J-100JE	1	435031004R1	NSP
R8341	CHIP TYPE CARBON RESISTOR	RN72K1J-100JE	1	435031004R1	NSP
R8342	CHIP TYPE CARBON RESISTOR	RN72K1J-100JE	1	435031004R1	NSP
R8343	CHIP TYPE CARBON RESISTOR	RN72K1J-100JE	1	435031004R1	NSP
R8344	CHIP TYPE CARBON RESISTOR	RN72K1J-102JE	1	435031024R1	NSP
R8345	CHIP TYPE CARBON RESISTOR	RN72K1J-103JE	1	435031034R1	NSP
R8346	CHIP TYPE CARBON RESISTOR	RN72K1J-102JE	1	435031024R1	NSP
R8347	CHIP TYPE CARBON RESISTOR	RN72K1J-103JE	1	435031034R1	NSP
R8348	CHIP TYPE CARBON RESISTOR	RN72K1J-472JE	1	435034724R1	NSP
R8349	CHIP TYPE CARBON RESISTOR	RN72K1J-222JE	1	435032224R1	NSP
R8350	CHIP TYPE CARBON RESISTOR	RN72K1J-222JE	1	435032224R1	NSP
R8363	CHIP RESISTOR NETWORK	MNR04MRAPJ330	1	43464733004R2	NSP
R8363or	CHIP RESISTOR NETWORK	YCN104-330-JK	(1)	43464C33004R1	NSP
R8386	CHIP TYPE CARBON RESISTOR	RN72K1J-105JE	1	435031054R1	NSP
R8400	CHIP RESISTOR NETWORK	MNR04MRAPJ103	1	43464710304R2	NSP
R8400or	CHIP RESISTOR NETWORK	YCN104-103-JK	(1)	43464C10304R1	NSP
R8401	CHIP TYPE CARBON RESISTOR	RN72K1J-103JE	1	435031034R1	NSP
R8402	CHIP RESISTOR NETWORK	MNR04MRAPJ470	1	43464747004R2	NSP

R8402or	CHIP RESISTOR NETWORK	YCN104-470-JK	(1)	43464C47004R1	NSP
R8403	CHIP TYPE CARBON RESISTOR	RN72K1J-473JE	1	435034734R1	NSP
R8404	CHIP TYPE CARBON RESISTOR	RN72K1J-103JE	1	435031034R1	NSP
R8405	CHIP TYPE CARBON RESISTOR	RN72K1J-470JE	1	435034704R1	NSP
R8406	CHIP TYPE CARBON RESISTOR	RN72K1J-101JE	1	435031014R1	NSP
R8407	CHIP TYPE CARBON RESISTOR	RN72K1J-470JE	1	435034704R1	NSP
R8408	CHIP TYPE CARBON RESISTOR	RN72K1J-470JE	1	435034704R1	NSP
R8414	CHIP TYPE CARBON RESISTOR	RN72K1J-470JE	1	435034704R1	NSP
R8415	CHIP TYPE CARBON RESISTOR	RN72K1J-470JE	1	435034704R1	NSP
R8416	CHIP TYPE CARBON RESISTOR	RN72K1J-101JE	1	435031014R1	NSP
R8417	CHIP TYPE CARBON RESISTOR	RN72K1J-105JE	1	435031054R1	NSP
R8418	CHIP TYPE CARBON RESISTOR	RN72K1J-470JE	1	435034704R1	NSP
R8419	CHIP TYPE CARBON RESISTOR	RN72K1J-470JE	1	435034704R1	NSP
R8420	CHIP TYPE CARBON RESISTOR	RN72K1J-470JE	1	435034704R1	NSP
R8421	CHIP TYPE CARBON RESISTOR	RN72K1J-103JE	1	435031034R1	NSP
R8422	CHIP TYPE CARBON RESISTOR	RN72K1J-101JE	1	435031014R1	NSP
R8423	CHIP TYPE CARBON RESISTOR	RN72K1J-332JE	1	435033324R1	NSP
R8424	CHIP TYPE CARBON RESISTOR	RN72K1J-332JE	1	435033324R1	NSP
R8425	CHIP TYPE CARBON RESISTOR	RN72K1J-470JE	1	435034704R1	NSP
R8426	CHIP TYPE CARBON RESISTOR	RN72K1J-470JE	1	435034704R1	NSP
R8427	CHIP TYPE CARBON RESISTOR	RN72K1J-100JE	1	435031004R1	NSP
R8429	CHIP TYPE CARBON RESISTOR	RN72K1J-470JE	1	435034704R1	NSP
R8430	CHIP TYPE CARBON RESISTOR	RN72K1J-470JE	1	435034704R1	NSP
R8431	CHIP TYPE CARBON RESISTOR	RN72K1J-470JE	1	435034704R1	NSP
R8432	CHIP TYPE CARBON RESISTOR	RN72K1J-470JE	1	435034704R1	NSP
R8437	CHIP TYPE CARBON RESISTOR	RN72K1J-473JE	1	435034734R1	NSP
R8438	CHIP TYPE CARBON RESISTOR	RN72K1J-220JE	1	435032204R1	NSP
R8439	CHIP TYPE CARBON RESISTOR	RN72K1J-220JE	1	435032204R1	NSP
R8440	CHIP TYPE CARBON RESISTOR	RN72K1J-220JE	1	435032204R1	NSP
R8441	CHIP TYPE CARBON RESISTOR	RN72K1J-220JE	1	435032204R1	NSP
R8442	CHIP TYPE CARBON RESISTOR	RN72K1J-220JE	1	435032204R1	NSP
R8443	CHIP TYPE CARBON RESISTOR	RN72K1J-220JE	1	435032204R1	NSP
R8444	CHIP TYPE CARBON RESISTOR	RN72K1J-101JE	1	435031014R1	NSP
R8445	CHIP TYPE CARBON RESISTOR	RN72K1J-101JE	1	435031014R1	NSP
R8446	CHIP TYPE CARBON RESISTOR	RN72K1J-472JE	1	435034724R1	NSP
R8447	CHIP TYPE CARBON RESISTOR	RN72K1J-102JE	1	435031024R1	NSP
R8448	CHIP TYPE CARBON RESISTOR	RN72K1J-103JE	1	435031034R1	NSP
R8449	CHIP TYPE CARBON RESISTOR	RN72K1J-182JE	1	435031824R1	NSP
R8450	CHIP TYPE CARBON RESISTOR	RN72K1J-182JE	1	435031824R1	NSP
R8452	CHIP TYPE CARBON RESISTOR	RN72K1J-103FE	1	435031032R1	NSP
R8453	CHIP TYPE CARBON RESISTOR	RN72K1J-223FE	1	435032232R1	NSP
R8458	CHIP TYPE CARBON RESISTOR	RN72K1J-100JE	1	435031004R1	NSP
R8459	CHIP TYPE CARBON RESISTOR	RN72K1J-560JE	1	435035604R1	NSP
R8461	CHIP TYPE CARBON RESISTOR	RN72K1J-560JE	1	435035604R1	NSP
R8462	CHIP TYPE CARBON RESISTOR	RN72K1J-473JE	1	435034734R1	NSP
R8464	CHIP RESISTOR NETWORK	MNR04MRAPJ470	1	43464747004R2	NSP
R8464or	CHIP RESISTOR NETWORK	YCN104-470-JK	(1)	43464C47004R1	NSP
R8465	CHIP RESISTOR NETWORK	MNR04MRAPJ101	1	43464710104R2	NSP
R8465or	CHIP RESISTOR NETWORK	YCN104-101-JK	(1)	43464C10104R1	NSP
R8466	CHIP RESISTOR NETWORK	MNR04MRAPJ220	1	43464722004R2	NSP
R8466or	CHIP RESISTOR NETWORK	YCN104-220-JK	(1)	43464C22004R1	NSP
R8467	CHIP RESISTOR NETWORK	MNR04MRAPJ220	1	43464722004R2	NSP
R8467or	CHIP RESISTOR NETWORK	YCN104-220-JK	(1)	43464C22004R1	NSP
R8468	CHIP RESISTOR NETWORK	MNR04MRAPJ220	1	43464722004R2	NSP
R8468or	CHIP RESISTOR NETWORK	YCN104-220-JK	(1)	43464C22004R1	NSP

R8469	CHIP RESISTOR NETWORK	MNR04MRAPJ220	1	43464722004R2	NSP
R8469or	CHIP RESISTOR NETWORK	YCN104-220-JK	(1)	43464C22004R1	NSP
R8471	CHIP TYPE CARBON RESISTOR	RN72K1J-220JE	1	435032204R1	NSP
R8472	CHIP TYPE CARBON RESISTOR	RN72K1J-220JE	1	435032204R1	NSP
R8473	CHIP TYPE CARBON RESISTOR	RN72K1J-220JE	1	435032204R1	NSP
R8474	CHIP TYPE CARBON RESISTOR	RN72K1J-220JE	1	435032204R1	NSP
R8475	CHIP TYPE CARBON RESISTOR	RN72K1J-220JE	1	435032204R1	NSP
R8477	CHIP TYPE CERAMIC CAPACITOR	CK725B1H-102K0	1	332031025R1	NSP
R8478	CHIP TYPE CERAMIC CAPACITOR	CK725B1H-102K0	1	332031025R1	NSP
R8479	CHIP TYPE CERAMIC CAPACITOR	CK725B1H-102K0	1	332031025R1	NSP
R8480	CHIP TYPE CERAMIC CAPACITOR	CK725B1H-102K0	1	332031025R1	NSP
R8603	CHIP TYPE CARBON RESISTOR	RN72K1J-473JE	1	435034734R1	NSP
R8604	CHIP TYPE CARBON RESISTOR	RN72K1J-473JE	1	435034734R1	NSP
R8605	CHIP TYPE CARBON RESISTOR	RN72K1J-100JE	1	435031004R1	NSP
R8606	CHIP TYPE CARBON RESISTOR	RN72K1J-000JE	1	435030004R1	NSP
R8613	CHIP TYPE CARBON RESISTOR	RN72K1J-473JE	1	435034734R1	NSP
R8614	CHIP TYPE CARBON RESISTOR	RN72K1J-473JE	1	435034734R1	NSP
R8615	CHIP TYPE CARBON RESISTOR	RN72K1J-100JE	1	435031004R1	NSP
R8623	CHIP TYPE CARBON RESISTOR	RN72K1J-473JE	1	435034734R1	NSP
R8624	CHIP TYPE CARBON RESISTOR	RN72K1J-473JE	1	435034734R1	NSP
R8625	CHIP TYPE CARBON RESISTOR	RN72K1J-100JE	1	435031004R1	NSP
R8633	CHIP TYPE CARBON RESISTOR	RN72K1J-473JE	1	435034734R1	NSP
R8634	CHIP TYPE CARBON RESISTOR	RN72K1J-473JE	1	435034734R1	NSP
R8635	CHIP TYPE CARBON RESISTOR	RN72K1J-100JE	1	435031004R1	NSP
R8645	CHIP TYPE CARBON RESISTOR	RN72K1J-100JE	1	435031004R1	NSP
R8663	CHIP TYPE CARBON RESISTOR	RN72K1J-473JE	1	435034734R1	NSP
R8664	CHIP TYPE CARBON RESISTOR	RN72K1J-473JE	1	435034734R1	NSP
R8665	CHIP TYPE CARBON RESISTOR	RN72K1J-100JE	1	435031004R1	NSP
R8702	CHIP RESISTOR NETWORK	MNR04MRAPJ221	1	43464722104R2	NSP
R8702or	CHIP RESISTOR NETWORK	YCN104-221-JK	(1)	43464C22104R1	NSP
R8703	CHIP TYPE CARBON RESISTOR	RN72K1J-103JE	1	435031034R1	NSP
R8704	CHIP RESISTOR NETWORK	MNR04MRAPJ103	1	43464710304R2	NSP
R8704or	CHIP RESISTOR NETWORK	YCN104-103-JK	(1)	43464C10304R1	NSP
R8705	CHIP TYPE CARBON RESISTOR	RN72K1J-473JE	1	435034734R1	NSP
R8707	CHIP RESISTOR NETWORK	MNR04MRAPJ103	1	43464710304R2	NSP
R8707or	CHIP RESISTOR NETWORK	YCN104-103-JK	(1)	43464C10304R1	NSP
R8709	CHIP TYPE CARBON RESISTOR	RN72K1J-470JE	1	435034704R1	NSP
R8710	CHIP TYPE CARBON RESISTOR	RN72K1J-102JE	1	435031024R1	NSP
R8711	CHIP TYPE CARBON RESISTOR	RN72K1J-103JE	1	435031034R1	NSP
R8712	CHIP TYPE CARBON RESISTOR	RN72K1J-470JE	1	435034704R1	NSP
R8713	CHIP TYPE CARBON RESISTOR	RN72K1J-101JE	1	435031014R1	NSP
R8718	CHIP TYPE CARBON RESISTOR	RN72K1J-222JE	1	435032224R1	NSP
R8719	CHIP TYPE CARBON RESISTOR	RN72K1J-222JE	1	435032224R1	NSP
R8720	CHIP TYPE CARBON RESISTOR	RN72K1J-103JE	1	435031034R1	NSP
R8721	CHIP RESISTOR NETWORK	MNR04MRAPJ470	1	43464747004R2	NSP
R8721or	CHIP RESISTOR NETWORK	YCN104-470-JK	(1)	43464C47004R1	NSP
R8723	CHIP TYPE CARBON RESISTOR	RN72K1J-472JE	1	435034724R1	NSP
R8725	CHIP TYPE CARBON RESISTOR	RN72K1J-470JE	1	435034704R1	NSP
R8726	CHIP TYPE CARBON RESISTOR	RN72K1J-103JE	1	435031034R1	NSP
R8727	CHIP TYPE CARBON RESISTOR	RN72K1J-221JE	1	435032214R1	NSP
R8728	CHIP TYPE CARBON RESISTOR	RN72K1J-103JE	1	435031034R1	NSP
R8729	CHIP TYPE CARBON RESISTOR	RN72K1J-221JE	1	435032214R1	NSP
R8730	CHIP TYPE CARBON RESISTOR	RN72K1J-470JE	1	435034704R1	NSP
R8731	CHIP RESISTOR NETWORK	MNR04MRAPJ103	1	43464710304R2	NSP
R8731or	CHIP RESISTOR NETWORK	YCN104-103-JK	(1)	43464C10304R1	NSP

R8732	CHIP TYPE CARBON RESISTOR	RN72K1J-221JE	1	435032214R1	NSP
R8733	CHIP TYPE CARBON RESISTOR	RN72K1J-105JE	1	435031054R1	NSP
R8734	CHIP TYPE CARBON RESISTOR	RN72K1J-470JE	1	435034704R1	NSP
R8736	CHIP TYPE CARBON RESISTOR	RN72K1J-102JE	1	435031024R1	NSP
R8737	CHIP TYPE CARBON RESISTOR	RN72K1J-472JE	1	435034724R1	NSP
R8738	CHIP TYPE CARBON RESISTOR	RN72K1J-103JE	1	435031034R1	NSP
R8739	CHIP TYPE CARBON RESISTOR	RN72K1J-102JE	1	435031024R1	NSP
R8740	CHIP TYPE CARBON RESISTOR	RN72K1J-103JE	1	435031034R1	NSP
R8741	CHIP TYPE CARBON RESISTOR	RN72K1J-102JE	1	435031024R1	NSP
R8742	CHIP TYPE CARBON RESISTOR	RN72K1J-103JE	1	435031034R1	NSP
R8743	CHIP TYPE CARBON RESISTOR	RN72K1J-103JE	1	435031034R1	NSP
R8744	CHIP TYPE CARBON RESISTOR	RN72K1J-470JE	1	435034704R1	NSP
R8745	CHIP TYPE CARBON RESISTOR	RN72K1J-103JE	1	435031034R1	NSP
R8746	CHIP TYPE CARBON RESISTOR	RN72K1J-470JE	1	435034704R1	NSP
R8750	CHIP TYPE CARBON RESISTOR	RN72K1J-470JE	1	435034704R1	NSP
R8752	CHIP RESISTOR NETWORK	MNR04MRAPJ470	1	43464747004R2	NSP
R8752or	CHIP RESISTOR NETWORK	YCN104-470-JK	(1)	43464C47004R1	NSP
R8753	CHIP RESISTOR NETWORK	MNR04MRAPJ470	1	43464747004R2	NSP
R8753or	CHIP RESISTOR NETWORK	YCN104-470-JK	(1)	43464C47004R1	NSP
R8755	CHIP TYPE CARBON RESISTOR	RN72K1J-103JE	1	435031034R1	NSP
R8756	CHIP TYPE CARBON RESISTOR	RN72K1J-103JE	1	435031034R1	NSP
R8757	CHIP RESISTOR NETWORK	MNR04MRAPJ101	1	43464710104R2	NSP
R8757or	CHIP RESISTOR NETWORK	YCN104-101-JK	(1)	43464C10104R1	NSP
R8758	CHIP TYPE CARBON RESISTOR	RN72K1J-103JE	1	435031034R1	NSP
R8790	CHIP TYPE CARBON RESISTOR	RN72K1J-220JE	1	435032204R1	NSP
R8791	CHIP TYPE CARBON RESISTOR	RN72K1J-220JE	1	435032204R1	NSP
R8900	CHIP TYPE CARBON RESISTOR	RN72K1J-472JE	1	435034724R1	NSP
R8901	CHIP TYPE CARBON RESISTOR	RN72K1J-102JE	1	435031024R1	NSP
R8904	CHIP TYPE CARBON RESISTOR	RN72K1J-102JE	1	435031024R1	NSP
R8922	CHIP TYPE CARBON RESISTOR	RN72K1J-473JE	1	435034734R1	NSP
R8923	CHIP TYPE CARBON RESISTOR	RN72K1J-332JE	1	435033324R1	NSP
R8924	CHIP TYPE CARBON RESISTOR	RN72K1J-682FE	1	435036822R1	NSP
R8925	CHIP TYPE CARBON RESISTOR	RN72K1J-332FE	1	435033322R1	NSP
R8926	CHIP TYPE CARBON RESISTOR	RN72K1J-103FE	1	435031032R1	NSP
R8932	CHIP TYPE CARBON RESISTOR	RN72K1J-473JE	1	435034734R1	NSP
R8933	CHIP TYPE CARBON RESISTOR	RN72K1J-332JE	1	435033324R1	NSP
R8934	CHIP TYPE CARBON RESISTOR	RN72K1J-272FE	1	435032722R1	NSP
R8935	CHIP TYPE CARBON RESISTOR	RN72K1J-222FE	1	435032222R1	NSP
R8936	CHIP TYPE CARBON RESISTOR	RN72K1J-103FE	1	435031032R1	NSP
R8939	CHIP TYPE CARBON RESISTOR	RN72K1J-102JE	1	435031024R1	NSP
R8949	CHIP TYPE CARBON RESISTOR	RN72K1J-104JE	1	435031044R1	NSP
R8952	CHIP TYPE CARBON RESISTOR	RN72K1J-473JE	1	435034734R1	NSP
R8953	CHIP TYPE CARBON RESISTOR	RN72K1J-682JE	1	435036824R1	NSP
R8954	CHIP TYPE CARBON RESISTOR	RN72K1J-333FE	1	435033332R1	NSP
R8955	CHIP TYPE CARBON RESISTOR	RN72K1J-124FE	1	435031242R1	NSP
R8956	CHIP TYPE CARBON RESISTOR	RN72K1J-103FE	1	435031032R1	NSP
R8958	CHIP TYPE CARBON RESISTOR	RN72K1J-473JE	1	435034734R1	NSP
R8962	CHIP TYPE CARBON RESISTOR	RN72K1J-473JE	1	435034734R1	NSP
R8964	CHIP TYPE CARBON RESISTOR	RN72K1J-563FE	1	435035632R1	NSP
R8965	CHIP TYPE CARBON RESISTOR	RN72K1J-274JE	1	435032744R1	NSP
R8966	CHIP TYPE CARBON RESISTOR	RN72K1J-103FE	1	435031032R1	NSP
R8982	CHIP TYPE CARBON RESISTOR	RN72K1J-104JE	1	435031044R1	NSP
R8983	CHIP TYPE CARBON RESISTOR	RN72K1J-473JE	1	435034734R1	NSP
R8984	CHIP TYPE CARBON RESISTOR	RN72K1J-103JE	1	435031034R1	NSP
R8985	CHIP TYPE CARBON RESISTOR	RN72K1J-473JE	1	435034734R1	NSP

R8989	CHIP TYPE CARBON RESISTOR	RN72K1J-103JE	1	435031034R1		NSP
[Switches, Terminals, Wires]						
P120	PRINTED WIRING BOARD	BCPRC-2409	1	25142409	**N**	NSP
P2800B	SOCKET	IMSA-9618S-23A	1	25053348R2		NSP
P2801B	SOCKET	IMSA-9618S-09A	1	25053334R2		NSP
P2802B	PLUG	NPLG-5P918	1	25055965R2		NSP
P3201	SOCKET	NSCT-9P2472	1	25052575R2		NSP
P3601	SOCKET	UB113-F04S1BR-C	1	25053652R2		NSP
P3651	SOCKET	MP04B1S2AM0-07T	1	25053617R3		NSP
P3654	SOCKET	APCI0085-P012A	1	25053616R2		NSP
P3658	TERMINAL	APCI0213-K001G	1	25060548R2		NSP
P6800B	PLUG	NPLG-5P918	1	25055965R2		NSP
P7001A	SOCKET	31FMN-SMT-A-TF	1	25052848R2		NSP
P7501	SOCKET	NSCT-9P2472	1	25052575R2		NSP
P8001	SOCKET	51U019S-3HFDN-BD-SM	1	25053549R3		NSP
P8001or	SOCKET	TCX3423-311387	(1)	25060513R3		NSP
P8001or	SOCKET	HDMI(47266-4101)	(1)	25053389R3		NSP
P8002B	PLUG	IMSA-9850B-30Y	1	25056329R2		NSP
P8003B	PLUG	IMSA-9850B-30Y	1	25056329R2		NSP
P8021	SOCKET	51U019S-3HFDN-BD-SM	1	25053549R3		NSP
P8021or	SOCKET	TCX3423-311387	(1)	25060513R3		NSP
P8021or	SOCKET	HDMI(47266-4101)	(1)	25053389R3		NSP
P8500B	SOCKET	51U019S-3HFDN-BD-SM	1	25053549R3		NSP
P8500Bor	SOCKET	TCX3423-311387	(1)	25060513R3		NSP
P8500Bor	SOCKET	HDMI(47266-4101)	(1)	25053389R3		NSP
P8611	SOCKET	51U019S-3HFDN-BD-SM	1	25053549R3		NSP
P8611or	SOCKET	TCX3423-311387	(1)	25060513R3		NSP
P8611or	SOCKET	HDMI(47266-4101)	(1)	25053389R3		NSP
P8621	SOCKET	51U019S-3HFDN-BD-SM	1	25053549R3		NSP
P8621or	SOCKET	TCX3423-311387	(1)	25060513R3		NSP
P8621or	SOCKET	HDMI(47266-4101)	(1)	25053389R3		NSP
P8631	SOCKET	51U019S-3HFDN-BD-SM	1	25053549R3		NSP
P8631or	SOCKET	TCX3423-311387	(1)	25060513R3		NSP
P8631or	SOCKET	HDMI(47266-4101)	(1)	25053389R3		NSP
P8641	SOCKET	51U019S-3HFDN-BD-SM	1	25053549R3		NSP
P8641or	SOCKET	TCX3423-311387	(1)	25060513R3		NSP
P8641or	SOCKET	HDMI(47266-4101)	(1)	25053389R3		NSP
P8651	SOCKET	51U019S-3HFDN-BD-SM	1	25053549R3		NSP
P8651or	SOCKET	TCX3423-311387	(1)	25060513R3		NSP
P8651or	SOCKET	HDMI(47266-4101)	(1)	25053389R3		NSP
P8661	SOCKET	51U019S-3HFDN-BD-SM	1	25053549R3		NSP
P8661or	SOCKET	TCX3423-311387	(1)	25060513R3		NSP
P8661or	SOCKET	HDMI(47266-4101)	(1)	25053389R3		NSP
P8710	PLUG	NPLG-2P915	1	25055962R2		NSP

<Note>

1. Parts marked by "**NSP**" are generally unavailable because they are not in our Master Spare Parts List.
2. The ! mark found on some component parts indicates the importance of the safety factor of the part.
   Therefore, when replacing, be sure to use parts of identical designation.

: NSP

REF. NO.	PART NAME	DESCRIPTION	Q'TY	PART NO. (SN)	REMARKS
[Semi-conductors]					
D2000	DIODE	G10XB80-02-54A-T	1	22380378	
D2000A	HEAT SINK	RAD-083	1	27160271	NSP
D2000B	SCREW	3P+10FN(3BC)	1	82143010GR	NSP
D2001	CHIP TYPE DIODE	DA2J10100	1	223303R2	NSP
D2001or	CHIP TYPE DIODE	1SS352	(1)	223234R2	NSP
D2002	CHIP TYPE DIODE	DA2J10100	1	223303R2	NSP
D2002or	CHIP TYPE DIODE	1SS352	(1)	223234R2	NSP
D2003	ZENER DIODE	DZ2J062M0L	1	224760620R2	NSP
D2003or	ZENER DIODE	UDZS6.2B	(1)	224550620R2	NSP
D2004	DIODE	RBR3MM30ATR	1	22380401R2	NSP
D2005	DIODE	RBR3MM30ATR	1	22380401R2	NSP
D6501	CHIP TYPE DIODE	DA2J10100	1	223303R2	NSP
D6501or	CHIP TYPE DIODE	1SS352	(1)	223234R2	NSP
D6503	CHIP TYPE DIODE	DA2J10100	1	223303R2	NSP
D6503or	CHIP TYPE DIODE	1SS352	(1)	223234R2	NSP
D6507	CHIP TYPE DIODE	DA2J10100	1	223303R2	NSP
D6507or	CHIP TYPE DIODE	1SS352	(1)	223234R2	NSP
D6509	CHIP TYPE DIODE	DA2J10100	1	223303R2	NSP
D6509or	CHIP TYPE DIODE	1SS352	(1)	223234R2	NSP
D6551	CHIP TYPE DIODE	DA2J10100	1	223303R2	NSP
D6551or	CHIP TYPE DIODE	1SS352	(1)	223234R2	NSP
Q2100	HYBRID IC	74VHC4053AFT	1	22274053ER2TO	NSP
Q2101	HYBRID IC	74VHC4051AFT	1	22274051ER2TO	NSP
Q2102	TRANSISTOR	2SA1162-GR	1	2214375R2	NSP
Q2103	TRANSISTOR	2SA1162-GR	1	2214375R2	NSP
Q2104	TRANSISTOR	2SA1162-GR	1	2214375R2	NSP
Q2400	TRANSISTOR	KRC102S	1	2216190R2	NSP
Q2400or	TRANSISTOR	DTC114ECAT116	(1)	2219010R2	NSP
Q2401	TRANSISTOR	KRA102S	1	2216220R2	NSP
Q2401or	TRANSISTOR	DTA114ECAT116	(1)	2218980R2	NSP
Q2500	TRANSISTOR	KTA1040D	1	2218210R2	NSP
Q2500or	TRANSISTOR	2SAR574D	(1)	2218220R2	NSP
Q2501	TRANSISTOR	2SC2712-GR	1	2213145R2	NSP
Q2502	TRANSISTOR	2SA1162-GR	1	2214375R2	NSP
Q2503	TRANSISTOR	2SA1162-GR	1	2214375R2	NSP
Q6501	TRANSISTOR	KRC105S	1	2217290R2	NSP
Q6501or	TRANSISTOR	DTC123JCAT116	(1)	2219040R2	NSP
Q6503	TRANSISTOR	KRC105S	1	2217290R2	NSP
Q6503or	TRANSISTOR	DTC123JCAT116	(1)	2219040R2	NSP
Q6507	TRANSISTOR	KRC105S	1	2217290R2	NSP
Q6507or	TRANSISTOR	DTC123JCAT116	(1)	2219040R2	NSP
Q6509	TRANSISTOR	KRC105S	1	2217290R2	NSP
Q6509or	TRANSISTOR	DTC123JCAT116	(1)	2219040R2	NSP
Q6551	TRANSISTOR	KRC105S	1	2217290R2	NSP
Q6551or	TRANSISTOR	DTC123JCAT116	(1)	2219040R2	NSP
[Transformers, Coils]					
L2100	CHOKE COIL	LBC2518T470M	1	231364M470R2	NSP
L2400	EMI SUPPRESSION FILTER	BK1608LL241-T	1	230959R1	NSP
[Capacitors]					
C2000	FILM C	C281H334J20A21A	1	376823344T	NSP
C2001	JAMICON TYPE ELECTROLYTIC CAPACITC	CE04W50V-4.7M	1	398580477T	

C2001or	VR TYPE ELECTROLYTIC CAPACITOR	CE04W50V-4.7M(VR)	(1)	394680477T	
C2002	ELECTROLYTIC CAPACITOR	CE69W25V-10000M	1	3504512	
C2002or	ELECTROLYTIC CAPACITOR	CE69W25V-10000M	(1)	3504502	
C2100	CHIP TYPE CERAMIC CAPACITOR	CK725B1H-103K1	1	332101035R1	NSP
C2101	CHIP TYPE CERAMIC CAPACITOR	CK725B1H-103K1	1	332101035R1	NSP
C2102	JAMICON TYPE ELECTROLYTIC CAPACITC	CE04W50V-2.2M	1	398580227T	
C2102or	VR TYPE ELECTROLYTIC CAPACITOR	CE04W50V-2.2M(VR)	(1)	394680227T	
C2103	JAMICON TYPE ELECTROLYTIC CAPACITC	CE04W50V-2.2M	1	398580227T	
C2103or	VR TYPE ELECTROLYTIC CAPACITOR	CE04W50V-2.2M(VR)	(1)	394680227T	
C2104	JAMICON TYPE ELECTROLYTIC CAPACITC	CE04W50V-2.2M	1	398580227T	
C2104or	VR TYPE ELECTROLYTIC CAPACITOR	CE04W50V-2.2M(VR)	(1)	394680227T	
C2105	JAMICON TYPE ELECTROLYTIC CAPACITC	CE04W50V-2.2M	1	398580227T	
C2105or	VR TYPE ELECTROLYTIC CAPACITOR	CE04W50V-2.2M(VR)	(1)	394680227T	
C2106	JAMICON TYPE ELECTROLYTIC CAPACITC	CE04W50V-2.2M	1	398580227T	
C2106or	VR TYPE ELECTROLYTIC CAPACITOR	CE04W50V-2.2M(VR)	(1)	394680227T	
C2107	JAMICON TYPE ELECTROLYTIC CAPACITC	CE04W50V-2.2M	1	398580227T	
C2107or	VR TYPE ELECTROLYTIC CAPACITOR	CE04W50V-2.2M(VR)	(1)	394680227T	
C2108	JAMICON TYPE ELECTROLYTIC CAPACITC	CE04W50V-2.2M	1	398580227T	
C2108or	VR TYPE ELECTROLYTIC CAPACITOR	CE04W50V-2.2M(VR)	(1)	394680227T	
C2109	JAMICON TYPE ELECTROLYTIC CAPACITC	CE04W50V-2.2M	1	398580227T	
C2109or	VR TYPE ELECTROLYTIC CAPACITOR	CE04W50V-2.2M(VR)	(1)	394680227T	
C2110	CHIP TYPE CERAMIC CAPACITOR	CK725F1E-104Z1	1	332161040R1	NSP
C2111	CHIP TYPE CERAMIC CAPACITOR	CK725F1E-104Z1	1	332161040R1	NSP
C2113	CHIP TYPE CERAMIC CAPACITOR	CK725B1H-103K1	1	332101035R1	NSP
C2114	UTSP TYPE ELECTROLYTIC CAPACITOR	CE04W10V-220M(UTSP)	1	397532217AT	
C2117	CHIP TYPE CERAMIC CAPACITOR	CK725B1H-103K1	1	332101035R1	NSP
C2119	CHIP TYPE CERAMIC CAPACITOR	CK725B1H-103K1	1	332101035R1	NSP
C2300	CHIP TYPE CERAMIC CAPACITOR	CK725B1H-103K1	1	332101035R1	NSP
C2404	CHIP TYPE CERAMIC CAPACITOR	CK725B1H-153K1	1	332101535R1	NSP
C2900	CHIP TYPE CERAMIC CAPACITOR	CK725B1H-103K1	1	332101035R1	NSP
C6501	CHIP TYPE CERAMIC CAPACITOR	CK725F1H-104Z1	1	332151040R1	NSP
C6503	CHIP TYPE CERAMIC CAPACITOR	CK725F1H-104Z1	1	332151040R1	NSP
C6505	CHIP TYPE CERAMIC CAPACITOR	CK725F1H-104Z1	1	332151040R1	NSP
C6507	CHIP TYPE CERAMIC CAPACITOR	CK725F1H-104Z1	1	332151040R1	NSP
C6509	CHIP TYPE CERAMIC CAPACITOR	CK725F1H-104Z1	1	332151040R1	NSP
C6520	UMXR TYPE PLASTIC FILM CAPACITOR	1JUMXRTF102JE	1	376591024T	NSP
C6521	UMXR TYPE PLASTIC FILM CAPACITOR	1JUMXRTF102JE	1	376591024T	NSP
C6522	UMXR TYPE PLASTIC FILM CAPACITOR	1JUMXRTF102JE	1	376591024T	NSP
C6523	UMXR TYPE PLASTIC FILM CAPACITOR	1JUMXRTF102JE	1	376591024T	NSP
C6525	UMXR TYPE PLASTIC FILM CAPACITOR	1JUMXRTF102JE	1	376591024T	NSP
C6526	UMXR TYPE PLASTIC FILM CAPACITOR	1JUMXRTF102JE	1	376591024T	NSP
C6527	UMXR TYPE PLASTIC FILM CAPACITOR	1JUMXRTF102JE	1	376591024T	NSP
C6528	UMXR TYPE PLASTIC FILM CAPACITOR	1JUMXRTF102JE	1	376591024T	NSP
C6529	UMXR TYPE PLASTIC FILM CAPACITOR	1JUMXRTF102JE	1	376591024T	NSP
C6551	CHIP TYPE CERAMIC CAPACITOR	CK725F1H-104Z1	1	332151040R1	NSP
C6571	UMXR TYPE PLASTIC FILM CAPACITOR	1JUMXRTF102JE	1	376591024T	NSP
C6572	UMXR TYPE PLASTIC FILM CAPACITOR	1JUMXRTF102JE	1	376591024T	NSP
[Resistors]					
R2000	CHIP TYPE CARBON RESISTOR	RN72K1J-103JE	1	435031034R1	NSP
R2001	CHIP TYPE CARBON RESISTOR	RN72K1J-103JE	1	435031034R1	NSP
R2100	CHIP TYPE CARBON RESISTOR	RN72K1J-750JE	1	435037504R1	NSP
R2101	CHIP TYPE CARBON RESISTOR	RN72K1J-750JE	1	435037504R1	NSP
R2102	CHIP TYPE CARBON RESISTOR	RN72K1J-750JE	1	435037504R1	NSP
R2103	CHIP TYPE CARBON RESISTOR	RN72K1J-750JE	1	435037504R1	NSP
R2104	CHIP TYPE CARBON RESISTOR	RN72K1J-750JE	1	435037504R1	NSP

R2105	CHIP TYPE CARBON RESISTOR	RN72K1J-750JE	1	435037504R1		NSP
R2106	CHIP TYPE CARBON RESISTOR	RN72K1J-750JE	1	435037504R1		NSP
R2107	CHIP TYPE CARBON RESISTOR	RN72K1J-750JE	1	435037504R1		NSP
R2108	CHIP TYPE CARBON RESISTOR	RN72K1J-103JE	1	435031034R1		NSP
R2109	CHIP TYPE CARBON RESISTOR	RN72K1J-271JE	1	435032714R1		NSP
R2110	CHIP TYPE CARBON RESISTOR	RN72K1J-104JE	1	435031044R1		NSP
R2111	CHIP TYPE CARBON RESISTOR	RN72K1J-103JE	1	435031034R1		NSP
R2112	CHIP TYPE CARBON RESISTOR	RN72K1J-103JE	1	435031034R1		NSP
R2113	CHIP TYPE CARBON RESISTOR	RN72K1J-103JE	1	435031034R1		NSP
R2114	CHIP TYPE CARBON RESISTOR	RN72K1J-103JE	1	435031034R1		NSP
R2120	CHIP TYPE CARBON RESISTOR	RN72K1J-333JE	1	435033334R1		NSP
R2121	CHIP TYPE CARBON RESISTOR	RN72K1J-271JE	1	435032714R1		NSP
R2122	CHIP TYPE CARBON RESISTOR	RN72K1J-104JE	1	435031044R1		NSP
R2124	CHIP TYPE CARBON RESISTOR	RN72K1J-333JE	1	435033334R1		NSP
R2125	CHIP TYPE CARBON RESISTOR	RN72K1J-271JE	1	435032714R1		NSP
R2126	CHIP TYPE CARBON RESISTOR	RN72K1J-104JE	1	435031044R1		NSP
R2128	CHIP TYPE CARBON RESISTOR	RN72K1J-333JE	1	435033334R1		NSP
R2300	CHIP TYPE CARBON RESISTOR	RN72K1J-000JE	1	435030004R1		NSP
R2307	CHIP TYPE CARBON RESISTOR	RN72K1J-000JE	1	435030004R1		NSP
R2402	CHIP TYPE CARBON RESISTOR	RN72K1J-104JE	1	435031044R1		NSP
R2403	CHIP TYPE CARBON RESISTOR	RN72K1J-152JE	1	435031524R1		NSP
R2405	CHIP TYPE CARBON RESISTOR	RN72K1J-000JE	1	435030004R1		NSP
R2406	CHIP TYPE CARBON RESISTOR	RN72K1J-000JE	1	435030004R1		NSP
R2408	CHIP TYPE CARBON RESISTOR	RN72K1J-472JE	1	435034724R1		NSP
R2500	CHIP TYPE CARBON RESISTOR	RN72K1J-180JE	1	435031804R1		NSP
R2501	CHIP TYPE CARBON RESISTOR	RN72K1J-103JE	1	435031034R1		NSP
R2502	CHIP TYPE CARBON RESISTOR	RN72K1J-333JE	1	435033334R1		NSP
R2503	CHIP TYPE CARBON RESISTOR	RN72K1J-103JE	1	435031034R1		NSP
R2504	CHIP TYPE CARBON RESISTOR	RN72K1J-103JE	1	435031034R1		NSP
R2505	CHIP TYPE CARBON RESISTOR	RN72K1J-180JE	1	435031804R1		NSP
R2506	CHIP TYPE CARBON RESISTOR	RN72K1J-180JE	1	435031804R1		NSP
R2507	CHIP TYPE CARBON RESISTOR	RN72K1J-180JE	1	435031804R1		NSP
R2508	CHIP TYPE CARBON RESISTOR	RN72K1J-103JE	1	435031034R1		NSP
R2900	CHIP TYPE CARBON RESISTOR	RN72K1J-331JE	1	435033314R1		NSP
R2901	CHIP TYPE CARBON RESISTOR	RN72K1J-331JE	1	435033314R1		NSP
R6500	CHIP TYPE CARBON RESISTOR	RN72K1J-000JE	1	435030004R1		NSP
[Switches, Terminals, Wires]						
F2000	FUSE	T6.3A-SEUL-T250V	1	252399T	**!**	
P100	PRINTED WIRING BOARD	BCTRM-2023	1	25142023B	**N**	NSP
P100B	PRINTED WIRING BOARD	BCETC-2024	{1}	25142024	**N**	NSP
P100C	PRINTED WIRING BOARD	BCETC-2025	{1}	25142025	**N**	NSP
P100D	PRINTED WIRING BOARD	BCETC-2027	{1}	25142027	**N**	NSP
P2000	PLUG	NPLG-3P117	1	25055133		NSP
P2100	PIN JACK	NPJ-2PDY748	1	25046003		
P2101	PIN JACK	NPJ-6PDGLRGLR646	1	25045871		
P2301	ST JACK	MSJ-035-52E-B-AG-PBT	1	25045947		
P2800A	SOCKET	NSCT-23P2414	1	25052517		NSP
P2801A	SOCKET	NSCT-9P2400	1	25052503		NSP
P2802	WIRE HARNESS ASSEMBLY	NSAS-5P2110	1	2009991299UL		NSP
P2802A	WIRE HOL	CHD-1.5-5	1	25053536		NSP
P2802Aor	WIRE HOL	NSCT-5P876	(1)	25051089		NSP
P2900	WIRE HARNESS ASSEMBLY	NSAS-3P2093	1	2009991282UL		NSP
P2900A	WIRE HOL	CHD-1.5-3	1	25053535		NSP
P2900Aor	WIRE HOL	NSCT-3P874	(1)	25051087		NSP
P2900B	PLUG	NPLG-3P131	1	25055147		NSP

P2901	SOCKET	MDS-09P-V-01(DSUB9P)	1	25053363		NSP
P6400B	PLUG	NPLG-7P121	1	25055137		NSP
P6401B	PLUG	NPLG-9P123	1	25055139		NSP
P6501	TERMINAL	NTM-6PDMCR456	1	25060535		
P6505	TERMINAL	NTM-4PDMNRR414	1	25060486	**N**	
P6507	TERMINAL	NTM-4PDMNRR414	1	25060486	**N**	
P6509	TERMINAL	NTM-4PDMNRR414	1	25060486	**N**	
P6551	TERMINAL	NTM-4PDMNRR414	1	25060486	**N**	
P7880	WIRE HARNESS ASSEMBLY	NSAS-5P2193	1	2009991382UL		NSP
P7880C	WIRE HOL	CHD-2.5-5	1	25053541		NSP
P7880Cor	WIRE HOL	NSCT-5P896	(1)	25051109		NSP
P9011B	PLUG	NPLG-5P133	1	25055149		NSP
RL6501	RELAY	NRL-2P5A-DC24-129	1	25065563A		
RL6501or	RELAY	NRL-2P5A-DC24-193	(1)	25065703		
RL6503	RELAY	NRL-2P5A-DC24-129	1	25065563A		
RL6503or	RELAY	NRL-2P5A-DC24-193	(1)	25065703		
RL6505	RELAY	NRL-2P5A-DC24-129	1	25065563A		
RL6505or	RELAY	NRL-2P5A-DC24-193	(1)	25065703		
RL6507	RELAY	NRL-2P5A-DC24-129	1	25065563A		
RL6507or	RELAY	NRL-2P5A-DC24-193	(1)	25065703		
RL6509	RELAY	NRL-2P5A-DC24-129	1	25065563A		
RL6509or	RELAY	NRL-2P5A-DC24-193	(1)	25065703		
RL6551	RELAY	NRL-2P5A-DC24-129	1	25065563A		
RL6551or	RELAY	NRL-2P5A-DC24-193	(1)	25065703		