OPTONICA SERVICE MANUAL

SA-5601/C
SA-5605/C

Digitized By RidgeDweller
For Free Distribution
DO NOT PAY FOR THIS DOCUMENT

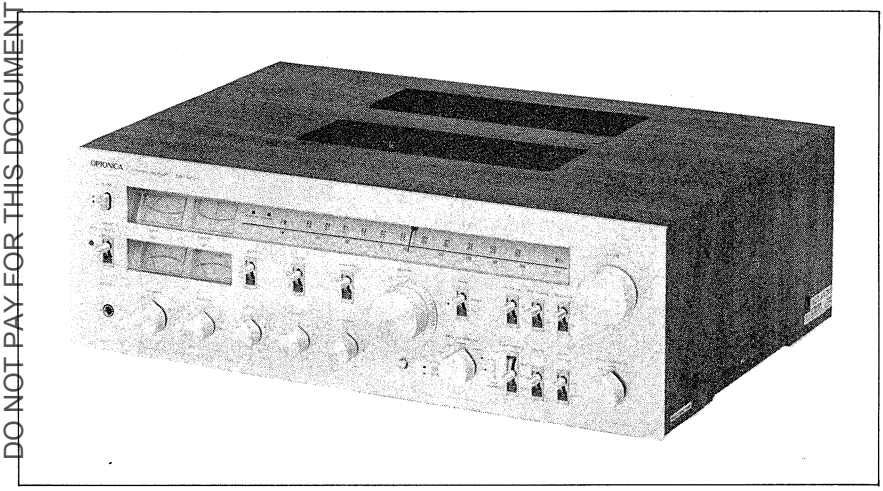

(PHOTO: SA-5601)

SIMULATED WALNUT GRAINED VINYL ON WOOD PRODUCT MATERIAL

FM/AM,

FM STEREO RECEIVER

MODEL

SA-5601
(Silver Panel)

SA-5605
(Black Panel)

SA-5601C
(Silver Panel)

SA-5605C
(Black Panel)

INDEX TO CONTENTS

1. SPECIFICATIONS 2
2. FRONT PARTS LAYOUT 3
3. REAR PARTS LAYOUT 3
4. DISASSEMBLY 4
5. DIAL CORD STRINGING 5
6. BLOCK DIAGRAM 6
7. CIRCUIT DESCRIPTION
   FM RF SECTION 7
   FM IF SECTION 8
   FM DETECTION SECTION
      (Quadrature Detector) 8
   FM MUTING CIRCUIT 9
   LOW-PASS FILTER 9
   FM STEREO DEMODULATOR SECTION 9
   AIR CHECK CALIBRATION CIRCUIT 10
   HI-BLEND CIRCUIT 11
   FM TUNING OPTO-LOCK MECHANISM 11
   AM SECTION 13
   TRIPLE TONE COUNTROL CIRCUIT 14
   EQUALIZER AMPLIFIER CIRCUIT 14
   MAIN (POWER) AMPLIFIER SECTION 15
   PROTECTION CIRCUIT (RELAY CIRCUIT) 16
   POWER SUPPLY CIRCUIT 17
   POWER METER DRIVE CIRCUIT 19
   RECORDING OUTPUT CIRCUIT 20
8. ALIGNMENT INSTRUCTIONS
   REQUIRED EQUIPMENT 21
9. ALIGNMENT POINTS OF RF/IF P.W. BOARD 21
   AM IF ALIGNMENT 22
   AM RF ALIGNMENT 22
   FM ALIGNMENT 23
   FM TUNING METER ADJUSTMENT AND
      DISTORTION FACTOR ADJUSTMENT 24
   ADJUSTMENT OF AIR CHECK CAL 24
   FM STEREO V.C.O. AND SEPARATION
      ADJUSTMENT 25
   ADJUSTMENT OF MAIN AMP CIRCUIT 26
   AF ALIGNMENT 26
10. POWER TRANSISTORS REPLACEMENT 27
11. MISCELLANEOUS PARTS GUIDE 28
12. DIODE TYPES 29
13. TRANSISTOR TYPES 29
14. SCHEMATIC DIAGRAM . . . . . 31 ~ 32
15. WIRING SIDE OF P.W. BOARD . . . . . 33 ~ 40
16. EQUIVALENT CIRCUIT OF INTEGRATED
   CIRCUIT . . . . . 41 ~ 45
17. PARTS LAYOUT . . . . . 47 ~ 53

SHARP CORPORATION
SHARP ELECTRONICS CORPORATION

Digitized By RidgeDweller
For Free Distribution
DO NOT PAY FOR THIS DOCUMENT

GENERAL DESCRIPTION

Power source:	120V 50/60 Hz
Power consumption:	270W
Semiconductors:	3-FET
	6-1C (Integrated circuit)
	57 Transistor
	54-Diode
	3-LED
Dimensions:	Width: 550 mm
	Height: 182 mm
	Depth: 405 mm
Weight:	18 kg

MAIN AMPLIFIER

Circuit:	Differential amplifier, complimentary system OCL (Output Capacitor-Less)
Continuous power Output:	85 watts per channel, minimum RMS, at 8 ohms, from 20 Hz to 20 kHz, with no more than 0.05% total harmonic distortion
Total harmonic distortion:	0.01% at 60 W (Aux. in)
Intermodulation distortion:	0.03% at 85 W (Aux. in)
Damping factor:	50 (at 1 kHz, 8 ohms)
Hum and noise level:	
Residual;	1 mV
Maximum volume;	Aux.: 1 mV
	Phono: 10 mV
	Tape: 1 mV
Signal to noise ratio (IHF "A" network):	
	Aux.: 98 dB
	Phono: 76 dB
	Tape: 98 dB

PRE-AMPLIFIER

Circuit:	
Equalizer;	Three-stage direct coupled equalizer circuit
Tone amplifier;	NF type tone control
Input Sensitivity and Input Impedance:	
Phono 1 and 2;	2.5 mB/47 k ohms
Aux.;	150 mV/100 k ohms
Tape playback 1 and 2;	150 mV/47 k ohms
Phono overload:	280 mV (RMS. 1 kHz 0.05% THD.)
RIAA curve deviation: (30 ~20 kHz)	± 0.3 dB
Frequency response:	15 Hz – 50 kHz ±1.5 dB (Aux., Tape playback)
Tone control:	
Bass;	± 10 dB at 100 Hz
Mid;	± 8 dB at 1 kHz
Treble;	± 10 dB at 10 kHz
Low cut filter:	30 Hz (–12 dB/oct)
High cut filter:	7 kHz (–6 dB/oct)
Audio muting:	–20 dB

FM

Tuning range:	87.6–108 MHz
Sensitivity (IHF):	9.8 dBf (1.7μV)
Total harmonic distortion:	
Mono;	0.15%
Stereo;	0.3%
Image rejection ratio:	90 dB
IF rejection ratio:	90 dB
Spurious rejection:	100 dB
AM suppression ratio:	60 dB
Selectivety:	75 dB
Signal to noise ratio:	
Mono;	80 dB
Stereo;	73 dB
Capture ratio:	1.2 dB
Stereo separation:	45 dB (1 kHz)

AM

Tuning range:	520–1620 kHz
Quieting sensitivity:	250μV/m
Image rejection ratio:	46 dB (1400 kHz)
IF rejection ratio:	32 dB (600 kHz)
Total harmonic distortion:	0.8%

Specifications are subject to change without prior notice:

Digitized By RidgeDweller
For Free Distribution
DO NOT PAY FOR THIS DOCUMENT

(PHOTO : SA-5601)

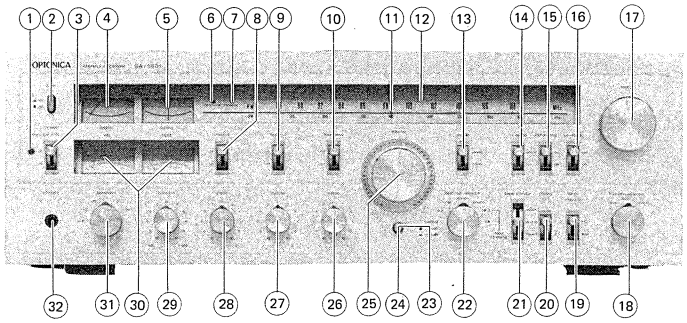

(1) Protection Indicator, LED (Green, Red)
VHPGL-52RG/1F
(2) Tuner Switch Knob
SA-5601, JKNBP0078AFSA
SA-5605, JKNBP0078AFSB
(3) Power Switch Knob
SA-5601, JKNBP0070AFSA
SA-5605, JKNBP0070AFSB
(4) Signal (Strength)Meter
RMTRL0179AFZZ
(5) FM Tuning (center) Meter
RMTRL0178AFZZ
(6) FM Opto Lock Indicator, LED (Red)
VHPGL3AR1//-1
(7) FM Stereo Indicator, LED (Red)
VHPGL3AR1//-1
(8) Low Cut Filter Switch Knob
SA-5601, JKNBP0070AFSA
SA-5605, JKNBP0070AFSB
(9) High Cut Filter Switch Knob
SA-5601, JKNBP0070AFSA
SA-5605, JKNBP0070AFSB
(10) Loudness Switch Knob
SA-5601, JKNBP0070AFSA
SA-5605, JKNBP0070AFSB
(11) Dial Pointer
HSSND0250AFSA
(12) Dial Scale
HDALM0195AFSA
(13) Mode Switch Knob
SA-5601, JKNBP0070AFSA
SA-5605, JKNBP0070AFSB
(14) Hi Blend Switch Knob
SA-5601, JKNBP0070AFSA
SA-5605, JKNBP0070AFSB
(15) FM Muting Switch Knob
SA-5601, JKNBP0070AFSA
SA-5605, JKNBP0070AFSB
(16) Air Check Calibrator Switch Knob
SA-5601, JKNBP0070AFSA
SA-5605, JKNBP0070AFSB
(17) Tuning Control Knob
SA-5601, JKNBN0383AFSA
SA-5605, JKNBN0383AFSB
(18) Function Selector Knob
SA-5601, JKNBN0330AFSA
SA-5605, JKNBN0318AFSB
(19) Band Selector Switch Knob
SA-5601, JKNBP0070AFSA
SA-5605, JKNBP0070AFSB
(20) Phono Input Selector Switch Knob
SA-5601, JKNBP0070AFSA
SA-5605, JKNBP0070AFSB
(21) Tape Monitor Switch Knob
SA-5601, JKNBP0070AFSA
SA-5605, JKNBP0070AFSB
(22) Recording Output/Tape
Dubbing Switch Knob
SA-5601, JKNBN0330AFSA
SA-5605, JKNBN0318AFSB
(23) Audio Muting Knob
SA-5601, JKNBM0136AFSE
SA-5605, JKNBM0136AFSD
(24) Spacer, Audio Muting Switch
SA-5601, PSPAS0008SGSA
SA-5605, PSPAS0008SGSB
(25) Volume Control Knob
SA-5601, JKNBN0316AFSA
SA-5605, JKNBN0316AFSB
(26) Treble Control Knob
SA-5601, JKNBN0338AFSA
SA-5605, JKNBN0367AFSA
(27) Mid Tone Control Switch Knob
SA-5601, JKNBN0338AFSA
SA-5605, JKNBN0367AFSA
(28) Bass Control Knob
SA-5601, JKNBN0338AFSA
SA-5605, JKNBN0367AFSA
(29) Balance Control Knob
SA-5601, JKNBN0338AFSA
SA-5605, JKNBN0367AFSA
(30) Power Meter
RMTRL0177AFZZ
(31) Speakers Selector Knob
SA-5601, JKNBN0330AFSA
SA-5605, JKNBN0318AFSB
(32) Headphones Jack
QJAKJ0057AFZZ

Figure 1 FRONT PARTS LAYOUT

(PHOTO : SA-5601)

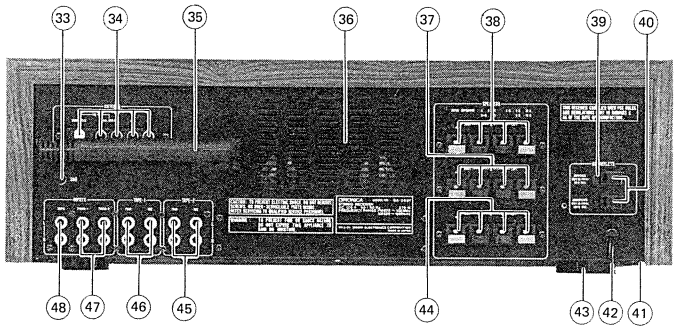

(33) Ground Terminal
QTANN0150AFZZ
(34) Antenna Terminal
QTANN0453AFZZ
(35) AM Bar Antenna
RCILA0429AFZZ
(36) Rear Panel
LANGQ0618AFSA (sa-5601)
LANGQ0619AFSA (SA-5605)
LANGQ0632AFSA (SA-5601C)
LANGQ0633AFSA (SA-5605C)
(37) Speakers Terminal-B
QTANZ0454AFZZ
(38) Speakers Terminal-A
QTANZ0454AFZZ
(39) Screw, AC Outlets Socket
LX-BZ0220AFFF
(40) AC Outlets Socket
QSOCA0402SGZZ
(41) Bashing, AC Cord
LBSHC0007AFZZ
(42) AC Cord with plug
QACCU0052AFZZ
(43) Leg
GLEGP0002SG00
(44) Speakers Terminal-C
QTANZ0454AFZZ
(45) Tape-2 (P.B. and REC) Socket
QSOCJ2264AFZZ
(46) Tape-1 (P.B. and REC) Socket
QSOCJ2262AFZZ
(47) Input (PHONO 1 and PHONO 2) Socket
QSOCZ2472AFZZ
(48) Input (AUX.) Socket
QSOCJ2264AFZZ

Figure 2 REAR PARTS LAYOUT

Digitized By RidgeDweller
For Free Distribution
DO NOT PAY FOR THIS DOCUMENT

Prior to removing the chassis, be sure to draw the power supply plug from a wall outlet. Then, proceed with the removal work in the following order after disconnecting all of the connection cords at the rear of the set.

1) To remove the cabinet:

Remove 6 screws ① retaining the cabinet (3 screws each for the right and left sides), then the cabinet can be detached.

2) To remove the bottom plate:

Turn over the set and remove 13 screws ② retaining the bottom plate, then the bottom plate can be detached.

3) To remove the front panel:

(1) Pull out the knobs ③ (20 knobs).

(2) Remove the nuts ④ retaining the speaker selector switch shaft and function selector switch shaft.

(3) Finally remove 2 screws ⑤ retaining the front panel, then the front panel can be detached.

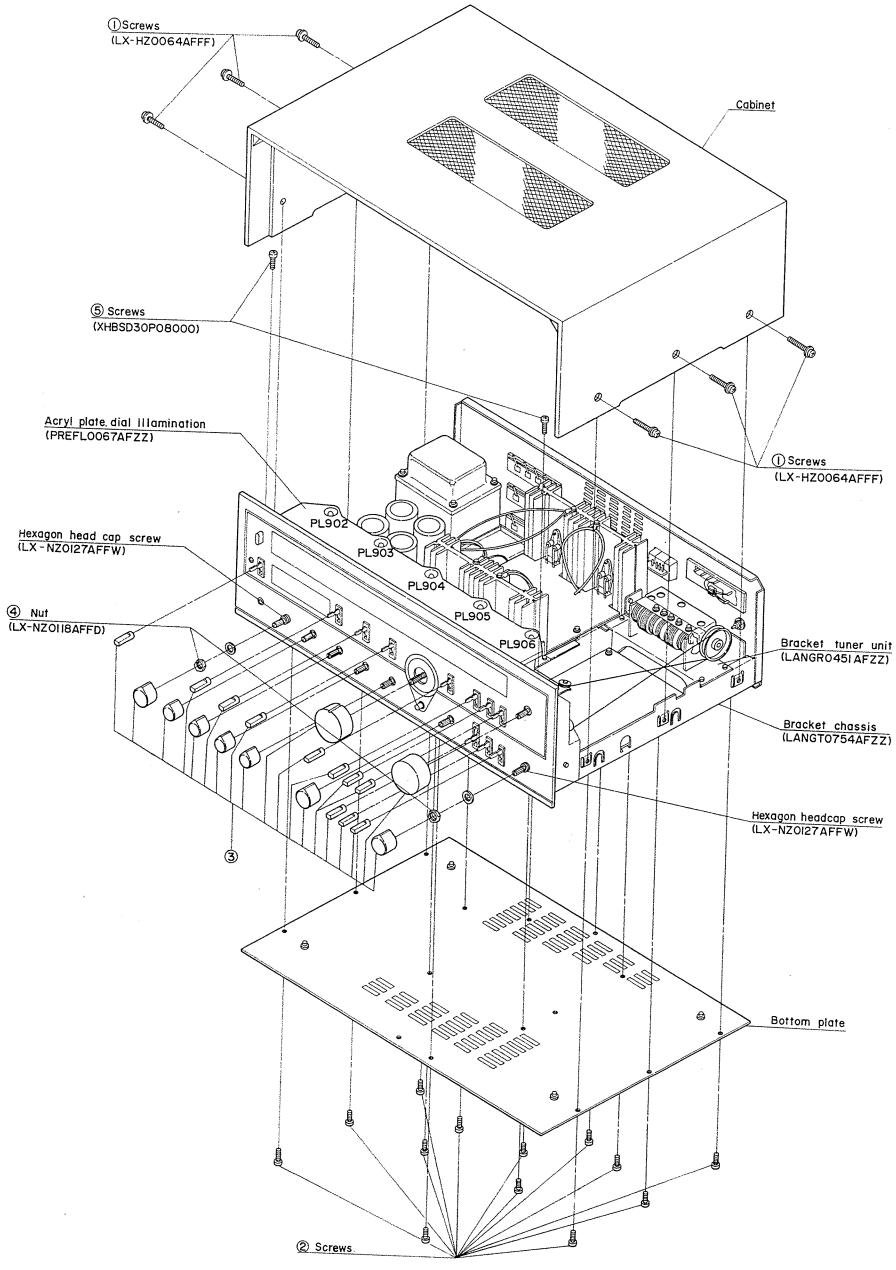

Figure 3 DISASSEMBLY

Digitized By RidgeDweller
For Free Distribution
DO NOT PAY FOR THIS DOCUMENT

1) Setting of the dial cord:

(1) Turn the drum fully counterclockwise (at the highest frequency position).

(2) Put a hook of the spring on the central hole of the drum.

(3) Then proceed with stringing in the numerical order from ① to ⑧ . At this work, while holding a hand at the position ⑥ to temporarily fix a dial string, wind the string on the drum by 1-½ turns at the position ⑦ (which is an extention of the string wound at the position ⑥) and bring it through the position ⑧ Then release a hand from the position ⑥ and thus the stringing is completed.

2) Setting of the pointer:

(1) Turn the tuning shaft fully counterclockwise (at the lowest frequency position).

(2) Align the pointer to the extreme left of the dial scale plate. (See Fig. 4—1.)

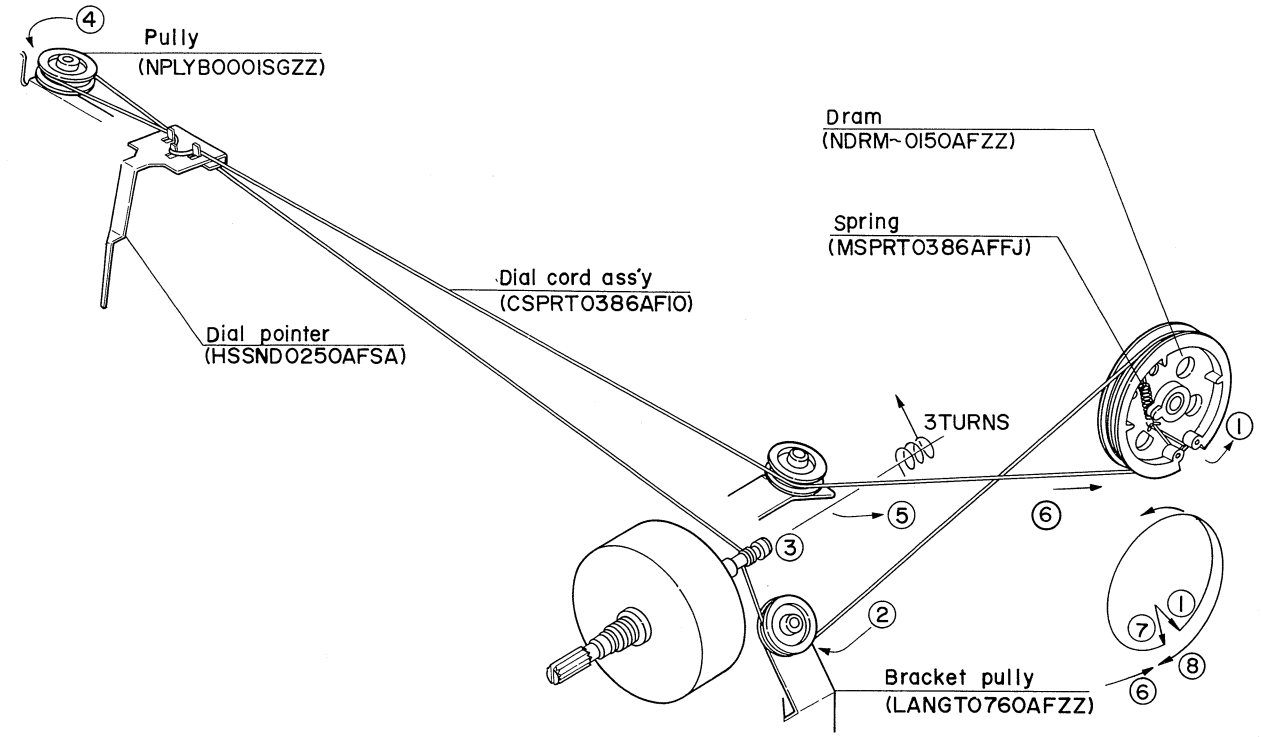

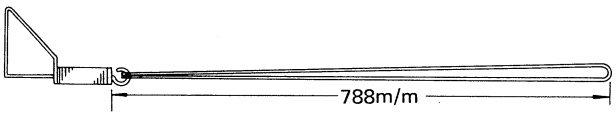

PHOTO : SA5601

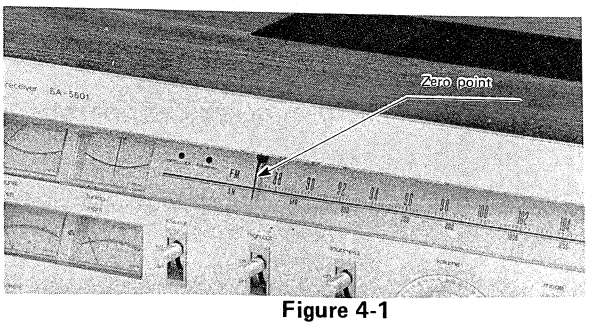

Figure 4-1

Figure 4 DIAL CORD STRINGING

Digitized By RidgeDweller
For Free Distribution
DO NOT PAY FOR THIS DOCUMENT

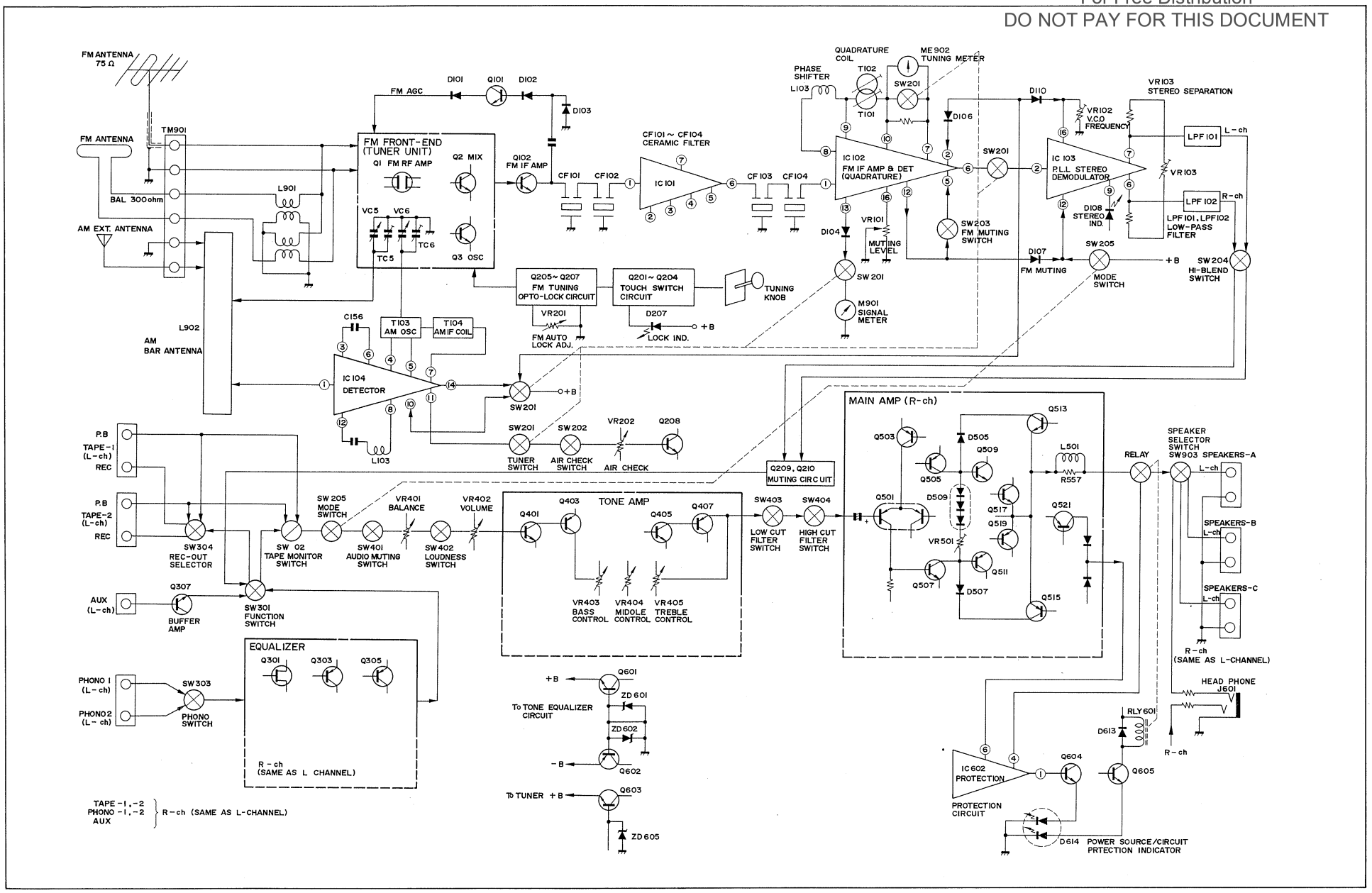

Figure 5 BLOCK DIAGRAM

Digitized By RidgeDweller
For Free Distribution
DO NOT PAY FOR THIS DOCUMENT

FM RF SECTION

FM antenna input circuit has two input terminals. The 75 ohms input terminal is used when FM antenna is connected to the unit by using a coaxial cable. The 300 ohms input terminal is used when FM antenna is connected to the unit by using a balanced feeder. Fig. 6 shows FM Front-End circuit. RF amplifying section consists of 1 dual gate MOS-FET and 2 transistors.

Transistor Q1 is dual gate MOS-FET and its function is nearly the same as of vacuum tube. Due to the adoption of MOS-FET, crossmodulation characteristic and spurious characteristic are remarkably improved compared with conventional transistor type. Dual gate MOS-FET Q1 is FM high frequency amplifier. Transistor Q2 works as frequency mixer, in which high frequency signal coming from the MOS-FET Q1 and local oscillation frequency coming from the transistor Q3 are mixed to produce 10.7MHz IF signal which will enter IF tuning transformer IF T1. The transistor Q3 is for the local oscillation and it applies oscillation voltage to the base of transistor Q2 via capacitor C15 (1.5 pF).

Therefore, coil L1 is for antenna tuning, coil L2, L4 is for FM RF amplification and tuning and coil L6 is for local oscillation.

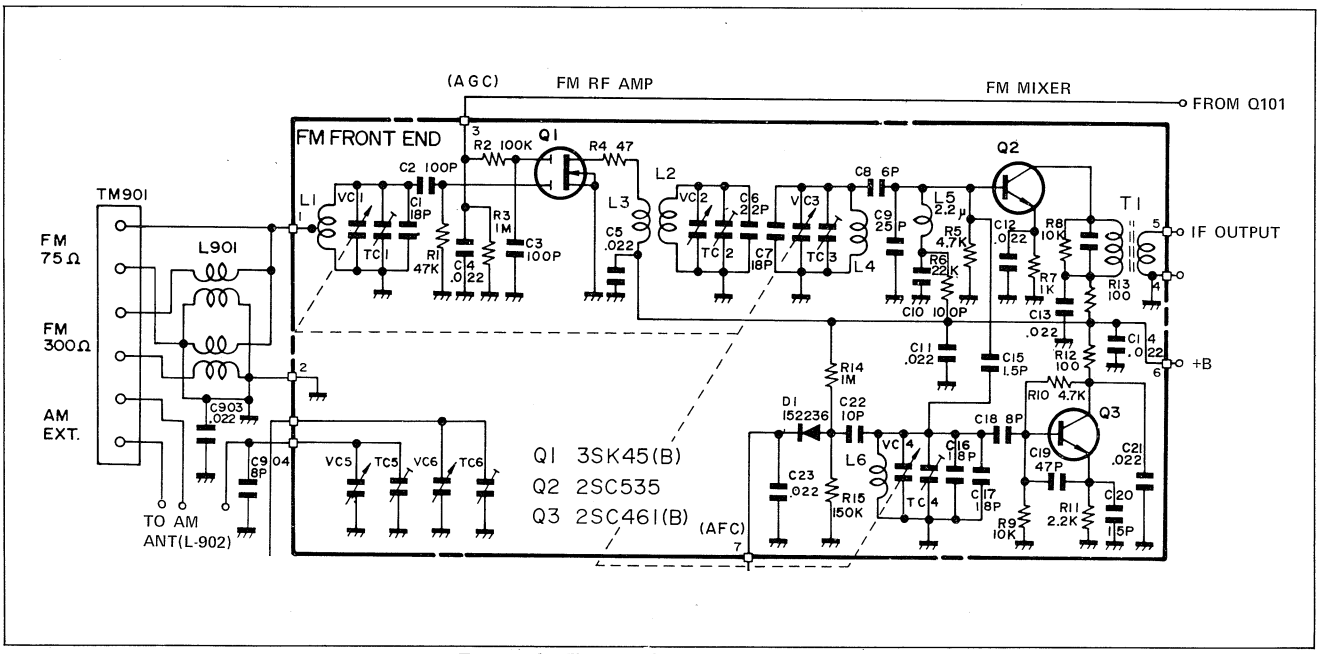

Figure 6 FM FRONT-END CIRCUIT

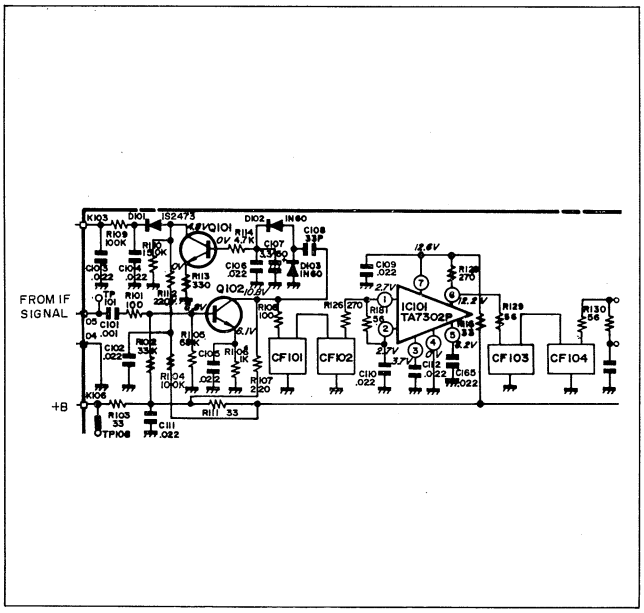

Figure 7 FM IF CIRCUIT

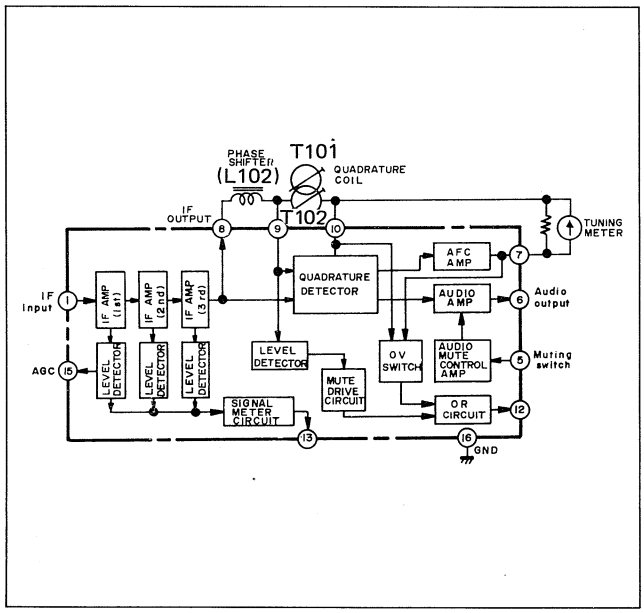

Figure 8 BLOCK DIAGRAM OF IC102

Digitized By RidgeDweller
For Free Distribution
DO NOT PAY FOR THIS DOCUMENT

FM IF SECTION

FM IF section consists of 1 IC (integrated circuit), transistor and ceramic filters. Transistor Q102 is FM IF amplification transistor, which is to amplify IF signal which has been converted into 10.7 MHz signal at FM front end section. This 10.7 MHz IF signal is given a higher selectivity since it runs through the concentrated selective elements, that is, ceramic filters CF101, CF102, CF103 and CF104. These filters function to amplify IF (intermediate frequency) signals giving no distortion and to assure a necessary selectivity. The IF signal is further supplied to the terminal 1 of IC102, in which the gain of this signal is increased by about 66 dB by the three-stage differential amplifier thus being subjected to an appropriate limiter function.

FM DETECTION SECTIONS (Quadrature Detector Circuit)

FM Detector Circuit

This unit employs 'Quadrature Detector' based on newly developed IC (Integrated Circuit), which is substituted for ratio detector and Foster-Seeley's detector that have been so far used. The basic structure of quadrature detector circuit is as shown in Figure 9.

With this detection system, the multiplier (quadrature detector) circuit receives two types of input signals, one is the signal which has been amplified by the limiting amplifier and another which has passed through the phase shift circuit (about $\pi/2$). Thus, the quadrature detector circuit produces demodulation signal.

The term 'quadrature is resulted from that the phase difference between these two signal is $\pi/2$. The multiplier consists of double balance circuit as shown in the following circuit drawing. Phase characteristic of the phase shift circuit is as shown in Figure 11.

This circuit is featured by:

(1) Good linearity and low distortion.

(2) Operates on small signal and less higher harmonics.

(3) Wide-band detection of as much as 1.2MHz.

Therefore, this circuit assures low distortion even with the overmodulation of more than 100% thereby reproducing high quality sound.

Actually saying, the detecting circuit-SA5601 (SA-5601C) and SA-5605(SA-5605C) uses L102 as phase-shift coil. T102 and T103 are 10.7 MHz tuning quadrature coil.

Detection output appears at the terminal 6 of IC102 and it is supplied to the terminal 2 of P.L.L. multiplex integrated circuit IC 103.

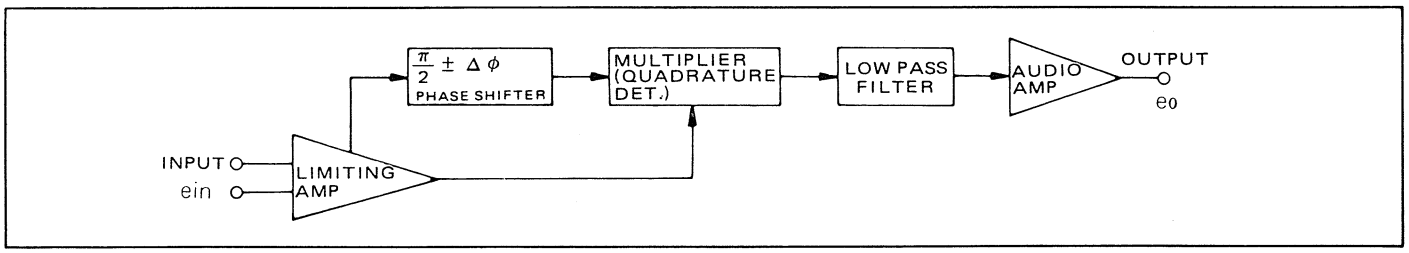

Figure 9 BASIC STRUCTURE OF QUADRATURE DETECTOR CIRCUIT

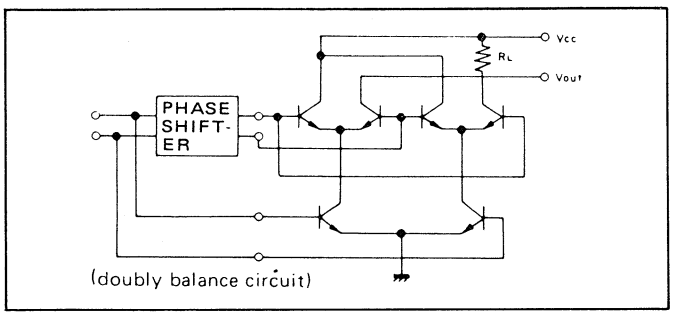

Figure 10

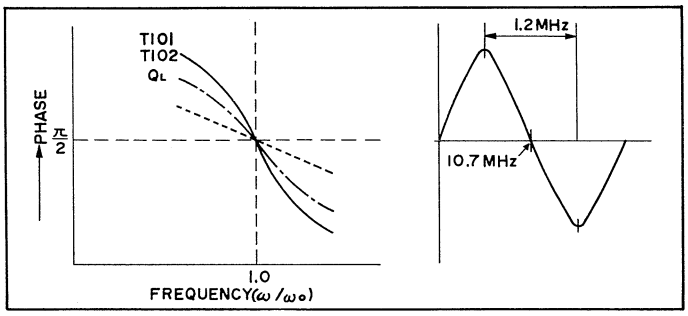

Figure 11

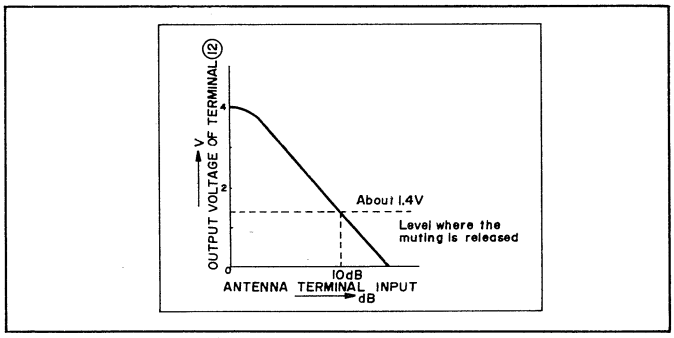

Figure 12

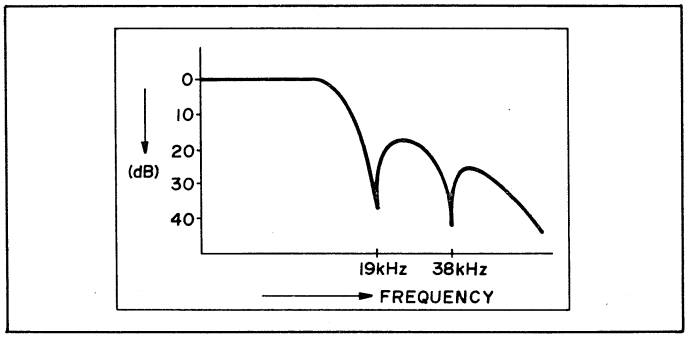

Figure 13

Digitized By RidgeDweller
For Free Distribution
DO NOT PAY FOR THIS DOCUMENT

FM MUTING CIRCUIT

In these sets SA-5601 (SA-5601C) and SA-5605 (SA-5605C), IC102 incorporates a muting circuit and this circuit is so designed that if FM input signal caught by the antenna becomes more than 10dB when the muting switch (SW203) has been set "on" position, the muting effect is released and thus the signal can appear at the output without undergoing muting. The muting release signal first develops at the terminal 12 of IC102, then to be applied through the muting switch (SW203) to the terminal 5 of IC102, so that the muting effect is able to become nil.

Figure 12 shows the output voltage of the terminal 12 of IC102. This signal (to release the muting) is then supplied to the terminal 12 of P.L.L. stereo multiplex demodulator integrated circuit IC103 to change the stereo signal that forced to monaural signal.

LOW-PASS FILTER

LPF101 and LPF102 are low-pass filters to remove carrier signals (19 kHz and 38 kHz) leaking from the stereo multiplex IC103. The characteristic is as shown in the Figure 13.

FM STEREO DEMODULATOR SECTION

1) Features of P.L.L. stereo demodulator circuit

This set incorporates a stereo demodulator circuit that comprises IC's with the P.L.L. (Phase Locked Loop) system applied. The P.L.L. stereo demodulator circuit is provided with such characteristics as mentioned below.

In order to demodulate stereo composite signals, it is necessary to take a 19kHz pilot signal out of the stereo composite signals and to make it a 38kHz signal.

Most of the conventional methods to obtain such a 38kHz signal are frequency doubling ones which utilize a nonlinearity of the elements. Compared with the conventional type, the recently developed IC-ed demodulator provides more sufficient separation effects. However, since it also requires 2 or 3 coils like the conventional one, if even one of them is dislocated from the initially adjusted point due to a secular change the separation effects will be deteriorated. Moreover there is such a contradiction that the more the efficiencies of the coils are increased enough to withstand the outer pulse signals like automobil ignition noises, the more the coils suffer

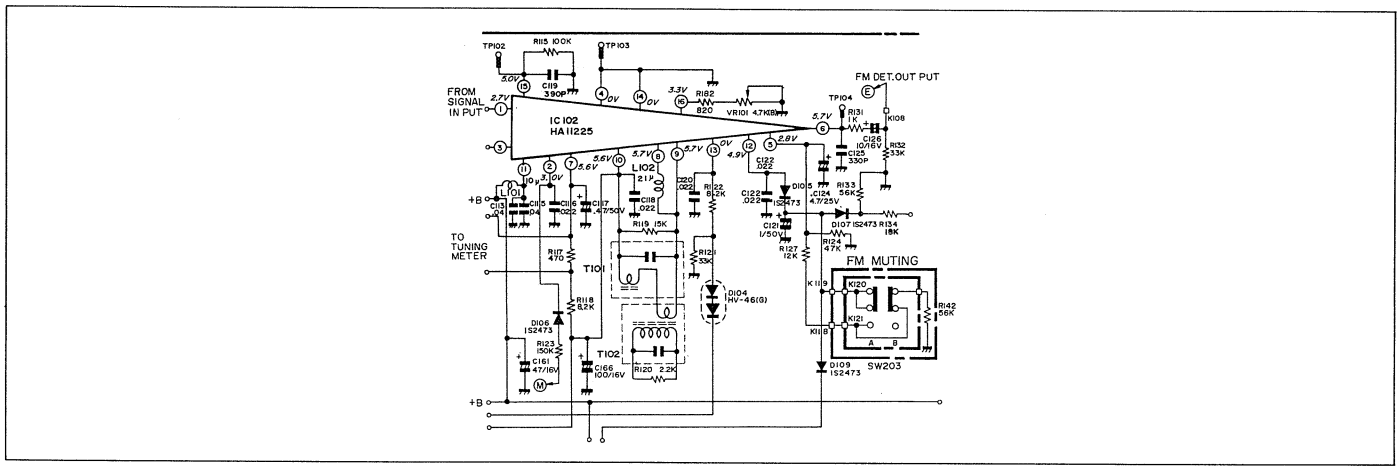

Figure 14 FM DETECTOR (QUADRATURE) CIRCUIT AND FM MUTING CIRCUIT

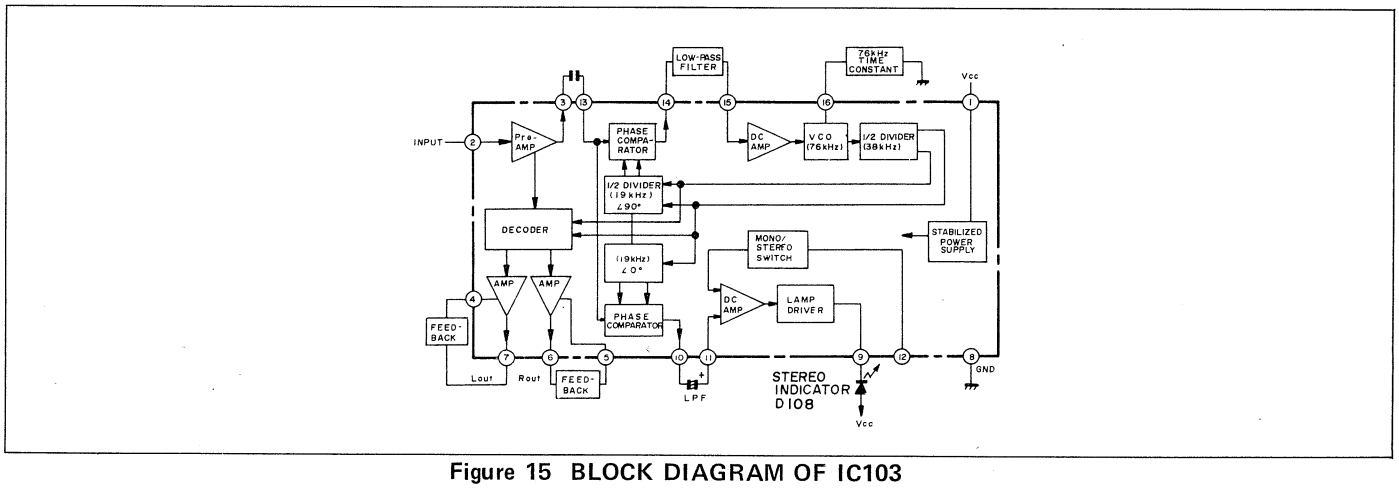

Figure 15 BLOCK DIAGRAM OF IC103

Digitized By RidgeDweller
For Free Distribution
DO NOT PAY FOR THIS DOCUMENT

secular changes.

To eliminate such disadvantages as above, P.L.L. system is employed in the method to make a 38kHz signal using a 19kHz pilot signal.

The P.L.L. system stereo demodulator gives such three merits as:

1. Since the phases of a pilot signal and a 38kHz signal are automatically made the same with each other, the deterioration of separation effect is strongly minimized.
2. Since only one of variable resistor, being newly employed, plays the role of 2 to 3 pieces of conventional coils, troubles of the parts due to secular changes are decreased. In addition, even if this variable resistor is slightly dislocated, the separation effect will never be deteriorated because of the merit as mentioned in 1 by which the automatic phase adjustment is assured.
3. Compared with the conventional one, the P.L.L. system demodulator shows a more noise withstanding characteristic since it has such performances as the selection of frequencies and the continuity of oscillation frequencies (short-time memory); thus assuring a stable stereo demodulation.

2) FM stereo demodulator circuit

IC103 is an integrated circuit for P.L.L. stereo demodulation and its block diagram is as shown in Figure 15.

V.C.O. free-running frequency is to be adjusted to 76kHz by adjusting semi-fixed resistor VR102 (10K ohm). TP106 is the test point for frequency observation. (See the paragraph 'Adjustment' described later.)

During AM reception, +B voltage is supplied to the terminal 16 of IC103 through diode D110 and resistor R178 so that oscillation frequency of V.C.O. will be stopped.

Semi-fixed resistor VR103 (220K ohms) aim at the adjustment of stereo separation and with this resistor it is possible to minimize crosstalk to the opposite channel. +B voltage is supplied to the terminal 12 of IC103 to force stereo signals to become monaural ones.

AIR CHECK CALIBRATION CIRCUIT

This circuit is to make appropriate the recording level in advance when recording FM broadcast into the tape recorder. The circuit shown in Figure 17 hereof is CR type oscillator circuit to be used for the air check calibration (about 400 Hz). In other words, when the "air check" switch at the front panel is set to "ON" position, and it appears at the output socket at the rear panel being as air check signal level. The air check signal level is set to 60 ± 8% of the output voltage obtained when the tuner receives FM broadcast signal (modulation 100%, 75kHz deviation) and this level voltage appears at the output terminal of the rear panel through the air check oscillator circuit. VR103 is semifixed resistor to be used for adjusting the air check signal level.

How to record FM broadcast using the air check calibration system is described below.

Set the "air check" switch to "ON" position, put the tape recorder in record mode, apply air check signal to the tape recorder and adjust the record level so that the record level meter of tape recorder indicates "0VU". After that, set the air check switch to "OFF" position and proceed with recording FM broadcast.

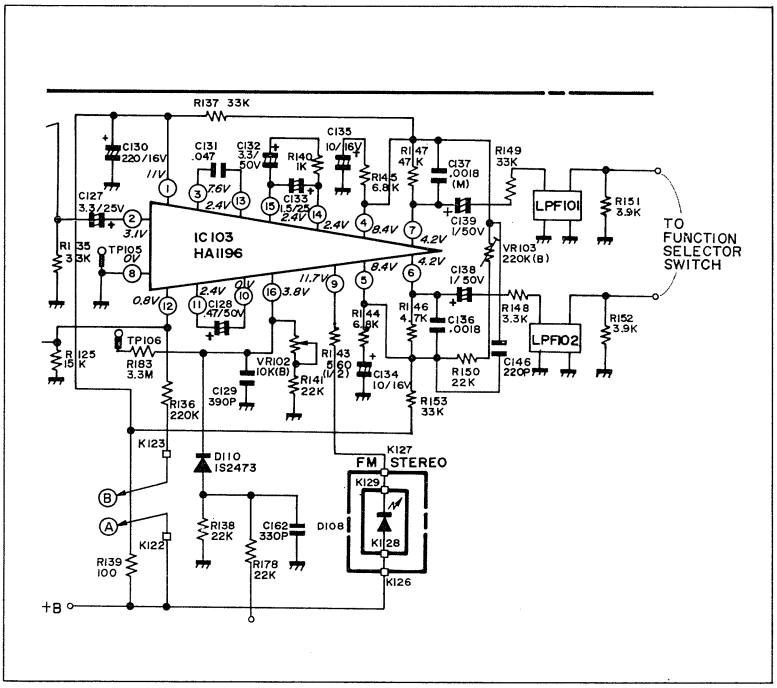

Figure 16 FM STEREO DIMODULATOR CIRCUIT

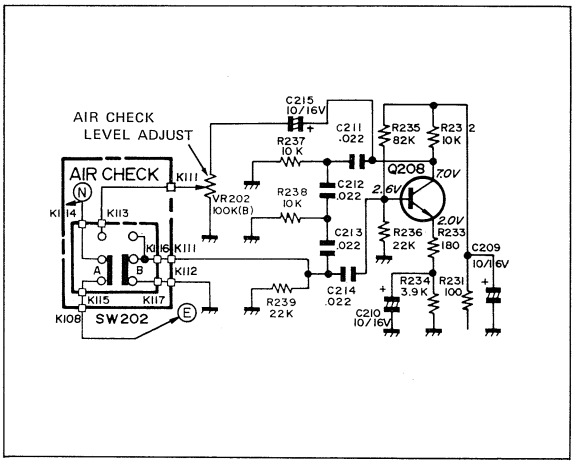

Figure 17 AIR CHECK CAL. CIRCUIT

Digitized By RidgeDweller
For Free Distribution
DO NOT PAY FOR THIS DOCUMENT

HI-BLEND CIRCUIT

The hi-blend circuit is composed of hi-blend switch (SW204) and capacitor C140 as shown in Fig. 18. If a stereo broadcast reception contains much noises, when the band selector switch is set to 'hi-blend' position, noises of both the right and left channels will be offset by each other since in the case of receiving the stereo broadcast, noises included in the both channels are at anti-phase relation from each other. This results in that the amount of noises is reduced so that the reproduced sound becomes more agreable to human ears. In this case, the stereo separation effect becomes, however, somewhat inferior in the high-frequency range.

FM TUNING OPTO-LOCK MECHANISM

This FM tuning opto-lock mechanism is the touch senser system one by which a desired FM broadcast, if tuned by the tuning knob, will be automatically locked as it were after the tuning knob is released; the tuning is thus hardly affected by external conditions so that the listener can enjoy a distortion-free reception for a longer time without any readjustment of the tuning. Light emitting diode D207 (red) of the lock indicator lights up when the lock circuit functions to have the tuning be locked to the desired FM broadcast.

1. CAPTURE RANGE

In receiving an FM broadcast, if the tuning is completed even in the vicinity of ±100kHz of such broadcast, an optimum tuning point is automatically selected to be locked.

2. DETUNING CHARACTERISTIC

After the lock indicator (D207) is lit (that is, a desired broadcast is tuned and locked by using the tuning knob), if the tuning knob is again touched by hand to make detuning, the lock circuit is unlocked: the lock range is about ±400kHz.

3. BEHAVIOR OF OPTO-LOCK CIRCUIT (See Fig. 20)

1) Touch Tuning Circuit

When the tuning knob is being touched by hand, human body-generated hum is applied to point ⓐ to be amplified by the transistors Q201 and Q202. The signal thus amplified is rectified by the diodes D201 and D202 to produce positive (+) voltage at the point ⓑ so that the transistor Q203 is turned on while the transistor Q114 be therefore turned off. Next, base voltage of transistor Q207 rises up and so the transistor Q207 is turned on, resulting in that a reference voltage c appears as it was at the test point TP204 to release the lock circuit. Upon the completion of tuning, when the hand is released off the tuning knob, the hum signal stops to enter the point ⓐ and therefore no positive voltage appears at the point ⓑ so that the transistor Q203 be turned off while that Q114 be turned on. As a result, since the base potential of transistor Q207 becomes 0V, the transistor Q207 is cut off and detuning detection voltage is, from the terminal 7 of the integrated circuit IC, applied to the point ⓓ. This results in that frequency control voltage which has been DC amplified by the transistors Q205 and Q206 appears at the test point TP204 to be supplied to AFC terminal of the FM front-end circuit and thus such control frequency is applied to the diode D1 of the front-end circuit: in this way, the local oscillation frequency is controlled to be locked to an optimum tuning point. Simultaneously with this locking, the lock indicator (D207) lights up.

2) Drive Circuit for the Opto-Lock Circuit and Indicator Circuit

The transistor Q204 works to drive the indicator circuit and opto-lock ON-OFF circuit. When a hand is released off the tuning knob, the transistor Q203 is turned off while that Q204 is turned on so that the lock indicator (D207) lights up.

3) Lock ON-OFF Circuit

The transistor Q207 is the one that can turn on or off the lock circuit: instantly when the transistor Q204 is turned on and the lock indicator lights up, the transistor Q207 is turned off.

With the transistor Q207 turned off, lock signal arising, at the terminal 7 of IC101 is supplied to the point ⓓ to be amplified by DC amplifier (transistors Q205 and Q206), so that it will appear at the test point TP204 through the resistor R228.

On the other hand, with the transistor Q207 turned on, a reference voltage at the point C appears as it is at the test point TP204 so that the lock circuit won't tend to operate. In the status where the lock circuit is not operating, a reference voltage is being applied to AFC terminal of the front-end circuit through the transistor Q207--this is totally the same as in an ordinary type tuner.

4) DC Amplifier for Lock Signal Amplification

This DC amplifier is composed of transistors Q205 and Q206 and it is to amplify the signal at the point ⓓ while reversing the polarity from one to another. Capture range of the locking is decided by how much amplification degree this circuit has. Diodes D206 and D205 are to carry out temperature compensation for this DC amplifier. Variable resistor VR201 is, if used, to adjust the center of the lock signal which has been supplied from the point ⓓ so that it will be aligned with the reference voltage (the voltage at the test point TP204) which has been supplied from the point c when the lock circuit is turned on.

5) Capture Range

Zero-volt switch is provided at IC102 and it has such a characteristic as shown in Fig. 22: only when a desired signal is tuned to the vicinity of ±Δf from the exact tuning point, the switch is turned on (as indicated by the oblique lines in Fig. 22) and detuning detection signal appears at the terminal 7 .

Therefore, capture characteristic appearing at the point ⓓ becomes effective in the shaded zones in Figs. 23 and 24. (indicated by the oblique lines in Fig. 21)

6) Lock Range

If the tuning is once set up (captured), it can withstand the frequency drift caused due to the fluctuation of external conditions: the resistive range is practically about ±200kHz (nearly equal) although it differs a little according. A difference between Figs. 23 and 24 is resulted from that the lock gain is increased by the transistors Q205 and Q206 so as to make polarity conversion of the frequency control voltage and to have the tuning be locked to a more accurate tuning central frequency.

Digitized By RidgeDweller
For Free Distribution
DO NOT PAY FOR THIS DOCUMENT

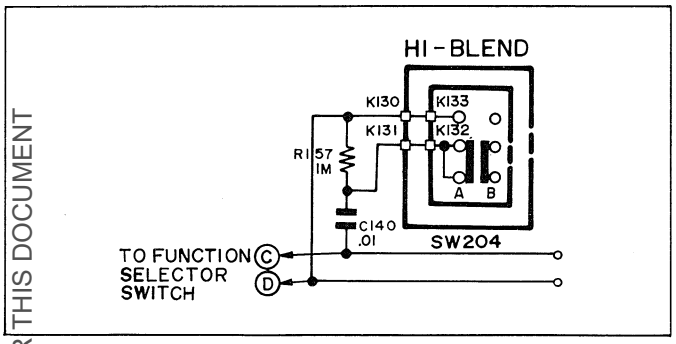

Figure 18

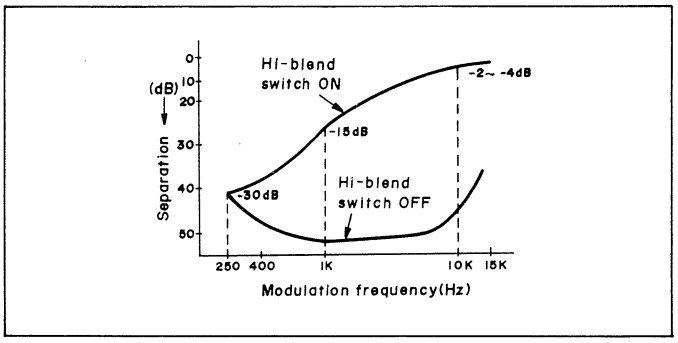

Figure 19 HI-BLEND CHARACTERISTIC

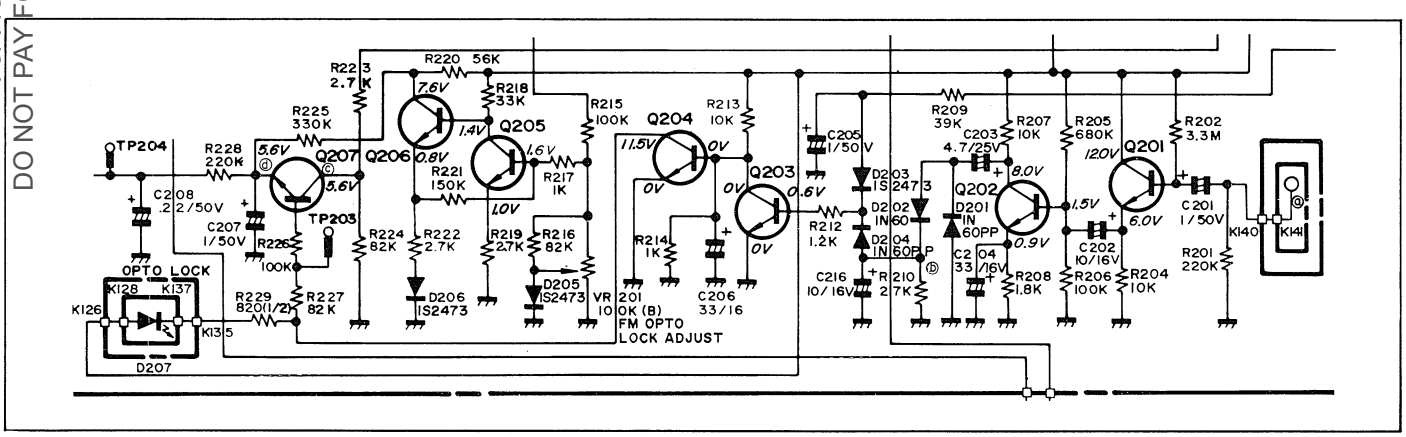

Figure 20 FM TUNING OPTO-LOCK CIRCUIT

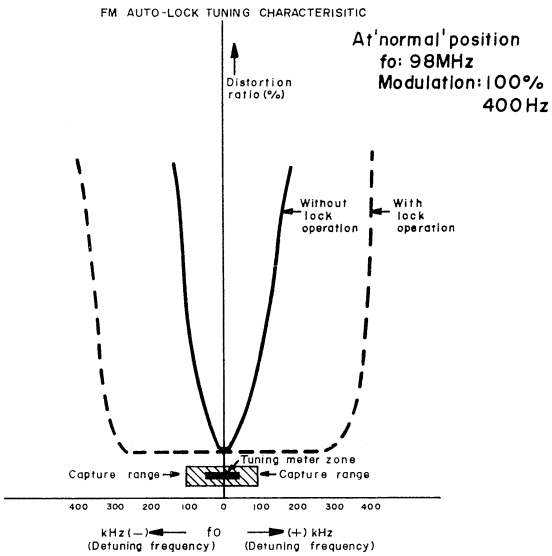

Figure 21 OPTO-LOCK TUNING CARACTERISTIC

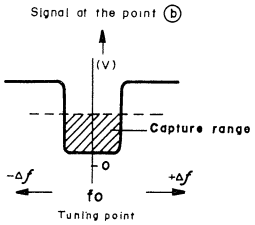

Figure 22

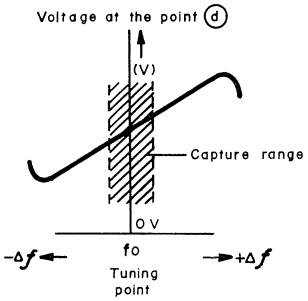

Figure 23

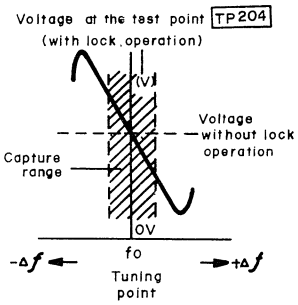

Figure 24

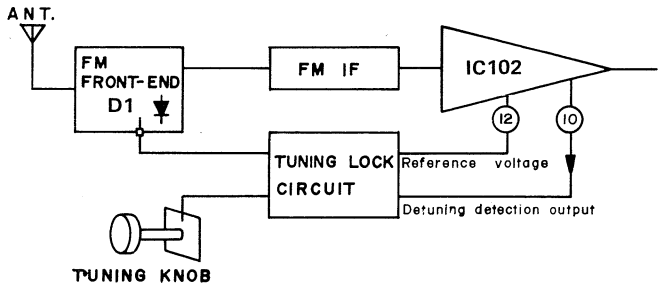

Figure 25 OPTO-LOCK LOOP

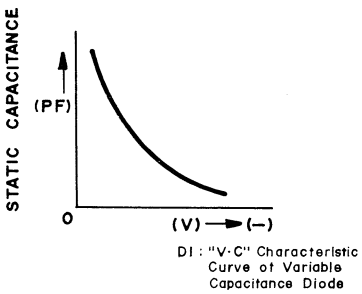

Figure 26

AM SECTION

Figure 27 is a block diagram of IC104. The coil L902 is AM ferrite bar antenna and it serves as antenna tuning circuit. Being received by the coil L902, AM broadcast signal is applied to the terminal 1 of the integrated circuit IC104 to be amplified by RF amplifier and then be supplied to the converter via the capacitor C156 T103 is an oscillation coil for AM local oscillation circuit. Intermediate frequency selection element making use of the ceramic filter T104 is employed as the load for the mixer T104 and the signal will further be amplified by 1st and 2nd IF amplifiers to be applied to the coil L103 and capacitor. Then the signal is finally detected by the detector circuit and it will be output at the terminal 11. This IC104 also includes signal meter drive circuit which enables easier tuning and the output at the terminal 14 is connected to the signal meter (M901).

Digitized By RidgeDweller
For Free Distribution
DO NOT PAY FOR THIS DOCUMENT

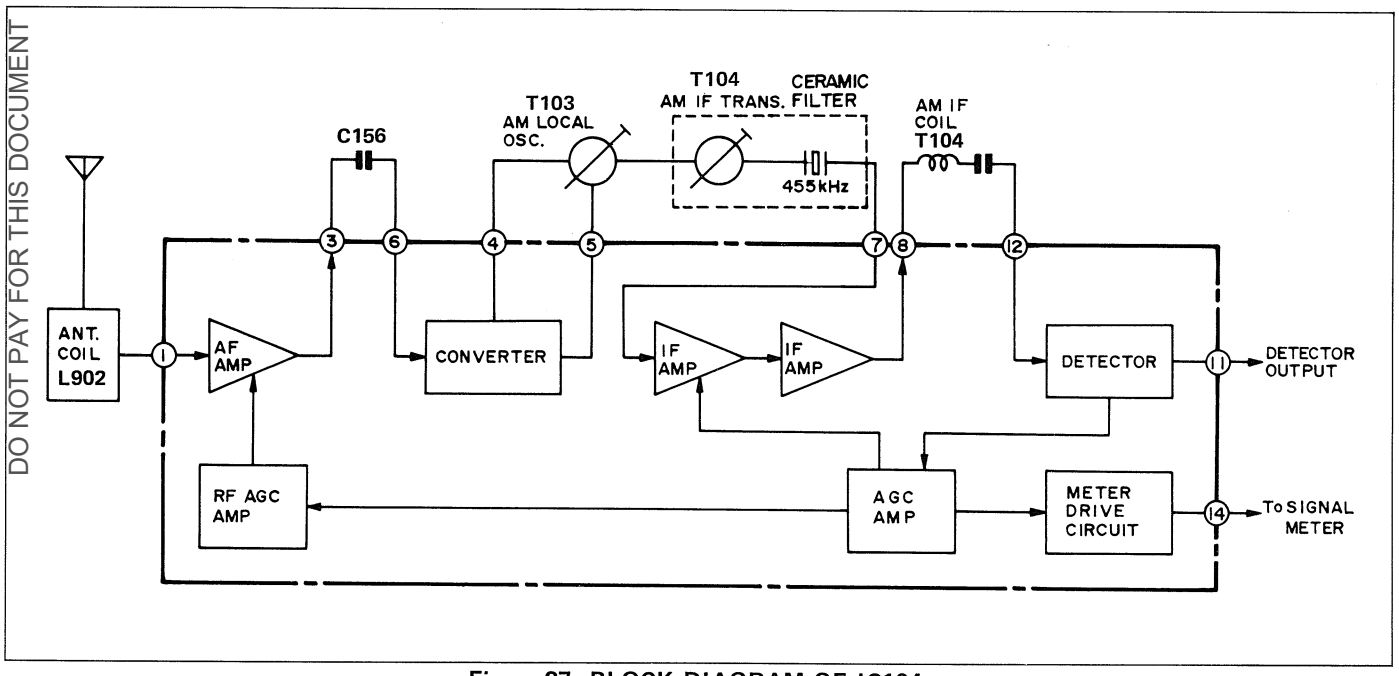

Figure 27 BLOCK DIAGRAM OF IC104

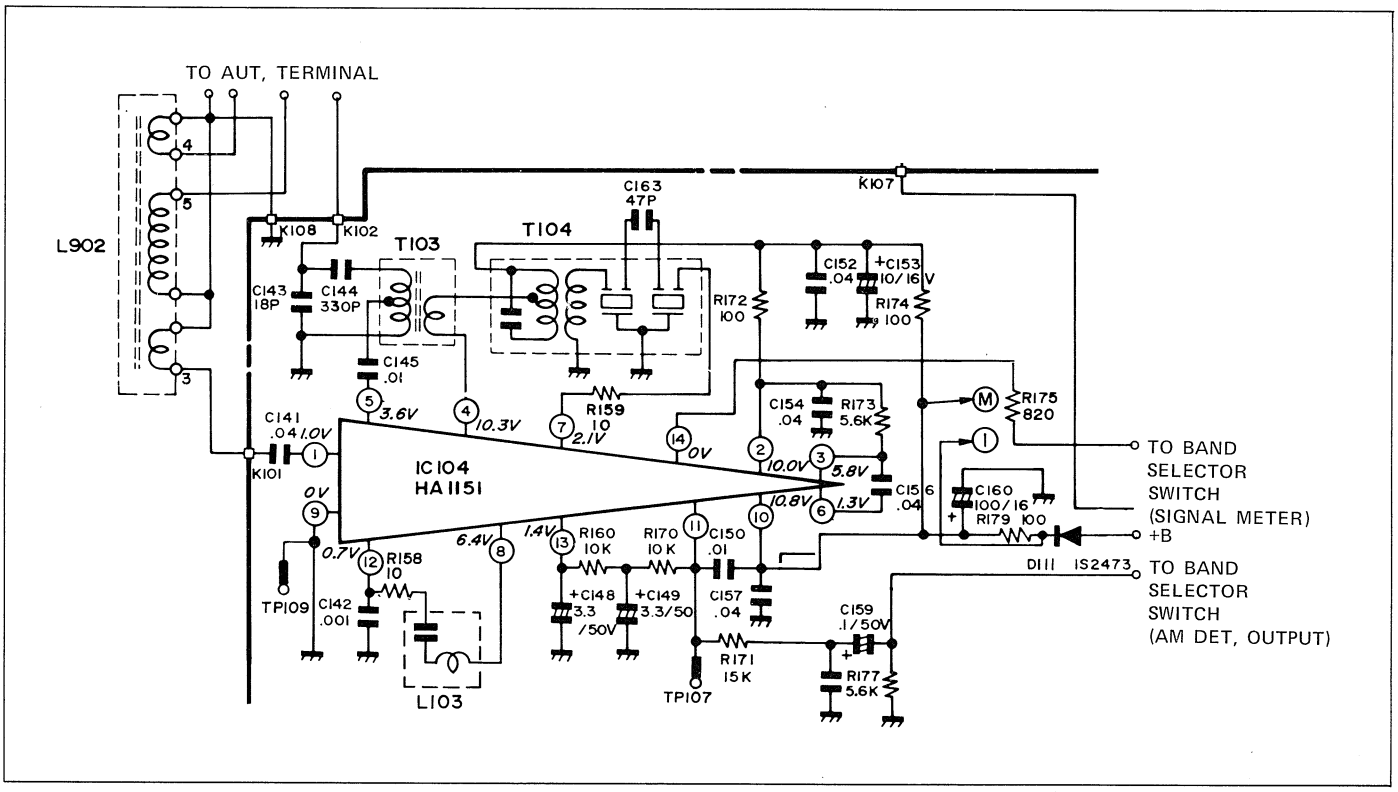

Figure 28 AM CIRCUIT

Digitized By RidgeDweller
For Free Distribution
DO NOT PAY FOR THIS DOCUMENT

TRIPLE TONE CONTROL CIRCUIT

Different from the conventional one having two tone controls (bass and treble), this new tone control circuit permits control (increase or decrease) of three tone ragnes bass, mid and treble respectively, which can thus be called a full-fledged NF (negative feedback) type tone control circuit. The transistors employed in this circuit features a low-noise characteristic, which helps widen a dynamic ragne, reduce a distortion factor as well as improve a phase characteristic.

Coming out of the volume control (VR402), the signal is first applied to the two-stage-directly-coupled flat amplifier which consists of the transistors Q401 and Q403 and next, via the bass, middle and treble controls, to the emitter follower type buffer amplifier formed by the transistors Q405 and Q407, where it is again amplified then to be passed on to the next stage low-cut and high-cut filters. As to a negative feedback characteristic of this circuit, it is so designed that some of the output signal at the Q407 (emitter) is coupled back to the Q403 of the first stage flat amplifier.

The VR 403 refers to a manual bass control which enables changing the frequency characteristic for the 100 Hz signal within a continuous variable range of ±10 dB; the VR404, ro a manual mid control, for the 1 KHz signal, within a range of ±8 dB; the VR405, to a manual treble control, for the 10 KHz signal, within a range of ±10 dB. The manual tone control is of a detent type.

EQUALIZER AMPLIFIER CIRCUIT

The equalizer circuit is powered by the two-power-supply system. Q301 and Q302 in the 1 stage are high-amplification and low-noise type. FET and input signals to these transistors are directly coupled with the 2 stage Q303 and Q304 in the 2 stage are low-noise transistor, in which almost all of the gains for the equalizer circuit are assured. The 3 stage is composed of Q305 and Q306 and it includes DC load resistor R327 and R328 the resistance of this resistor is limited to the minimum to assure signal inputs in a hingh frequency range. C315 and C314 are board strap capacitors which are to increase the gains of the 2 stage transistors Q303 and Q304 to improve the linearity.

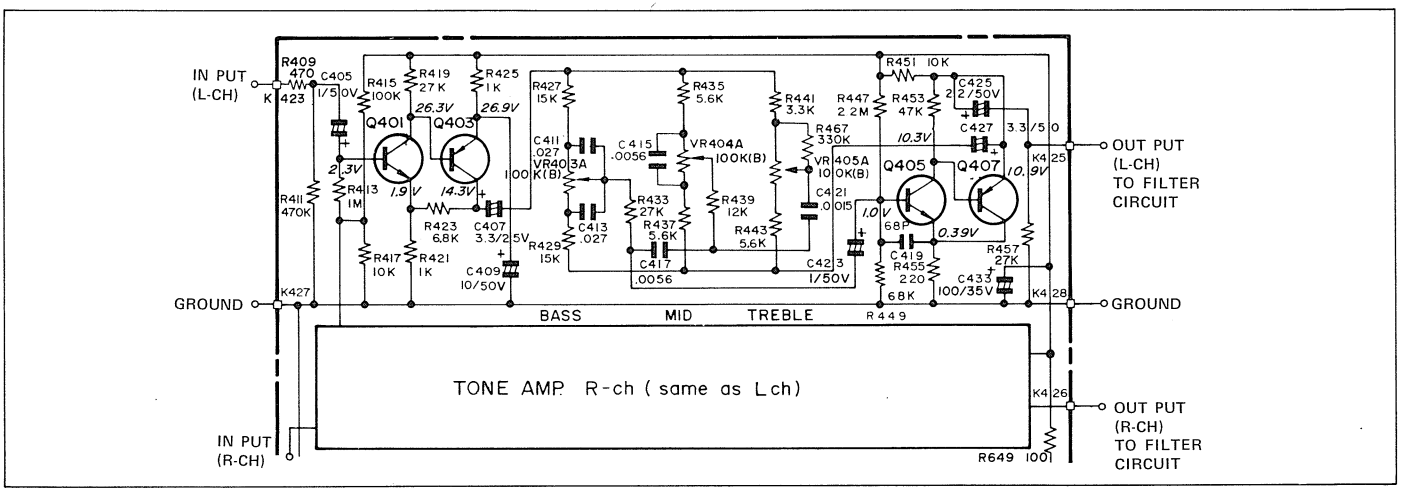

Figure 29 TONE AMP. CIRCUIT

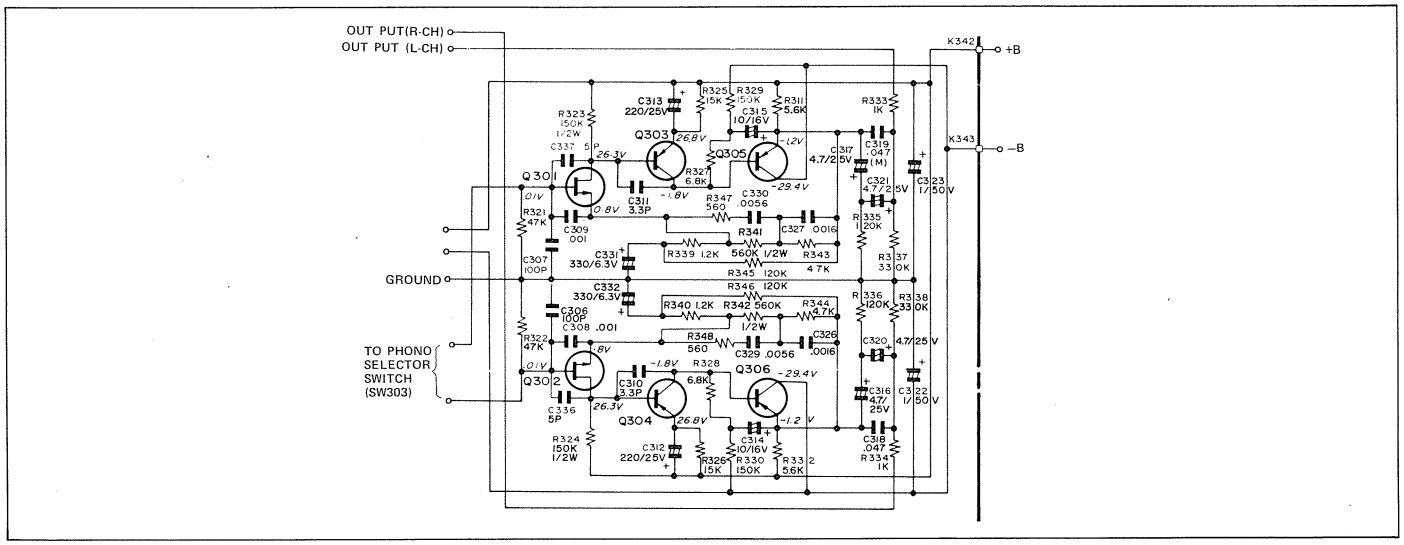

Figure 30 EQUALIZER (PHONO) CIRCUIT

Digitized By RidgeDweller
For Free Distribution
DO NOT PAY FOR THIS DOCUMENT

MAIN (POWER) AMPLIFIER SECTION

The main amplifier consists of all-stage direct-coupled pure complementary output capacitorless circuit.
This main amplifier is designed to operate on the 2-power (positive and negative) supply system and so the speaker terminal output voltage becomes earth potential (0V) in terms of DC component. Therefore, with this amplifier it is not necessary to use a coupling capacitor for cutting off DC component although it has so far been required when the speaker is connected to the amplifier.
Besides, it enables the amplification in a wider range from lower frequency to higher frequency. This is an origin of the term OCL (Output Capacitor-Less).

FEAUTURE OF PURE COMPLEMENTARY OCL CIRCUIT

Since this circuit is not using output capacitor, the frequency characteristic is kept uniform even at very low frequency band and the output impedance is low in any of frequency bands resulting in that the value of damping factor is made larger so that the braking efficiency of speaker is increased.
With this circuit, since a 100 percent NF is assured when the frequency of signal is zero and the value of NF is determined at only one place when the frequency of signal is at low band, the function of circuit is stabilized.

MAIN AMPLIFIER

The main amplifier is OCL (Output Capacitor-Less) circuit in which the class "A" drive circuit consists of 1-stage differential amplifier circuit.
The signal coming from the filter circuit is amplified by differential amplifier Q501 (or Q502) via resistor R503 (or R504) and dapacitor C501 (or C502). The transistor used in this differential amplifier is a PNP type low noise dual transistor (2 SA798G) the characteristic of which is almost not affected by fluctuations of temperature so that the voltage resulted in the speaker terminal is protected against such fluctuations and it is kept always to minimized.
Singal thus amplified by the differential amplifier is further amplified by the class "A" audio amplifier Q507 (or Q508). Moreover, the signal is amplified for the half cycle at the driver amplifier stage consisting of NPN type transistor Q509 (or Q510) and PNP type transistor Q511 (of Q512). Then, the signal is further amplified for the half cycle at NPN type transistor Q517 (or Q518) and PNP type transistor Q519 (or Q520) to be supplied to the speaker. Transistors Q503 (or Q504) and Q505 (or Q506) are constant-current circuit and its amperage is determined by D509. Transistor Q503 (or Q504) functions to protect the differential amplifier Q501 (or Q502) against fluctuations of temperature and voltage resulting in that the center voltage (speaker terminal voltage) is kept constant. Transistor Q505 (or Q506) is constant-current circuit to supply constant current so that the load applied to the class "A" driver Q507 (or Q508) will be reduced thus the gain being increased.
As a result of the gain of Q507 (or Q508) being increased by Q505 (or Q506), plenty of NF is produced and so that distortion is lessened. NF factor of NF circuit is determined by resistors R519 (or R520) and R507 (or R508), and the higher NF factor, the higher is the gain. NF factor at the low frequency band is determined by capacitor C509 and resistor R507. Transistor Q505 (or Q506) and Diode D509 (or D510) are to cause the bias of class "B" drive stage and to produce idling current of 33~100mA so that cross-over distortion due to class "B" operation is eliminated. The idling current is to be adjusted by semi-variable resistor VR501 (or VR502). Resistor R559 (or R560) and capacitor C519 (or C520) are to keep the power amplifier stabilized when given no load. Coil L501 (or L502) functions to prevent of high-frequency oscillation. Transistor Q521 (or Q522) works as protection circuit. Q513 (or Q514), Q515 (or 516), D505 (or D506) and D507 (or D508) are short circuit, etc. at the output section and they detect voltage which will be caused at R545 (or R546) and R547 (or R548) (emitter resistor) if current runs excessibely-if the detected voltage is higher than as roted, the collector-emitter of Q513 (or Q514) and Q515 (or Q516) becomes conductive. D505 (or D506) and Q505 (or Q506) are being located between the base of Q509 (or 510), Q511 (or Q512) and the center (speaker output) and serve as constant-current circuit, and this results in that the power transistor (Q517, Q 519 or Q518, Q520) is assured of a rating current.

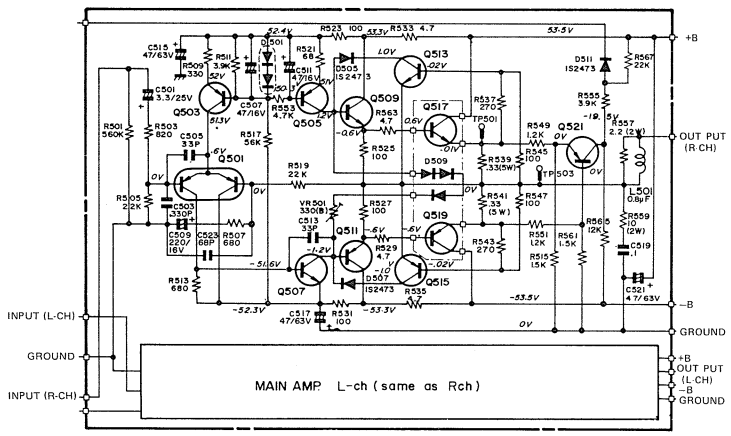

Figure 31 MAIN (POWER) AMPLIFIER CIRCUIT

Digitized By RidgeDweller
For Free Distribution
DO NOT PAY FOR THIS DOCUMENT

PROTECTION CIRCUIT (RELAY CIRCUIT)

The protection circuit used in this set is so designed as to function in the following instances:

(1) It protects the speaker against possible shock noise caused when the power switch is turned on.

(2) It protects the speaker against possible shock noise caused when the power switch is turned off.

(3) It functions when DC voltage is generated at the speaker terminal (for instance, when DC voltage gets unbalanced due to a trouble inside the amplifier).

(4) It functions when the speaker terminals are shorted and the load impedance is lowered (for instance, when several speakers are connected in parallel to the amplifier) and over load.

(5) In the case of the temperature of heat sink increasing abnormally.

- The protection circuit is composed of Schmidt trigger circuit (Q604, Q605), IC601 and transistors (Q521, Q522) which detect something abnormal in the circuits.
- If the base potential of the Q604 and Q605 of Schmidt trigger circuit becomes lowered, the Q604 is turned off so that its collector potential increases and the base potential of Q605, thereby, also increases: then, the Q605 is turned on causing a collector current to turn on the relay (RLY 601) so that the speaker is energized.
- If the base potential of the Q604, and Q605 is increased, there occurs an action reverse to the previous one to turn off the relay (RLY 601), resulting in that no output is applied to the speaker.
- The LED (D614) lights up green and red respectively when the relay is turned on and off.
- The transistors Q521 and Q522 are to detect something abnormal in the circuitry if caused, thereby to apply a signal via the diode (D511 or D512) to the terminal 6 of IC602 turning off the relay (RLY601).

(1) The protection circuit is so designed that the relay starts to act in 4 to 5 seconds after the power switch (SW901) is turned off, during which the circuits concerned can achieve normal actions.

(2) The relay is initiated through the process that AC power from the power transformer (T901) is once negative- and half-wave-rectified and the resultant negative component is applied to the terminal 5 of IC602.

(3) When DC voltage of the main amplifier becomes positive or negative with respect to the neutral level, this level variation is detected by the transistors if it exceeds the specified threshold voltage of ±5V, so that the relay is turned off to cut off power to the speaker. It is in this way that the speaker is protected against damage by a voltage increase.

(4) The main amplifier and speaker will be damaged if during operation, the speaker terminals are shorted, the load inpedance extremely lowers or the input signal amount becomes excessive. However, this posibility is also eliminated by the protection circuit. Being of a function-latch type, the relay of this protection circuit is so designed that it, even after the abnormality has been eliminated, doesn't tend to turn on unless the power switch is turned off first and then turned on again.

(5) If the heat sink plate is heated up abnormally, resistance of the thermistors (TH901, TH902) is increased to be subjected to voltage division by the R619, so that there develops voltage at ends of the thermistors to be applied to the terminal 3 of IC602, thereby turning off the relay.

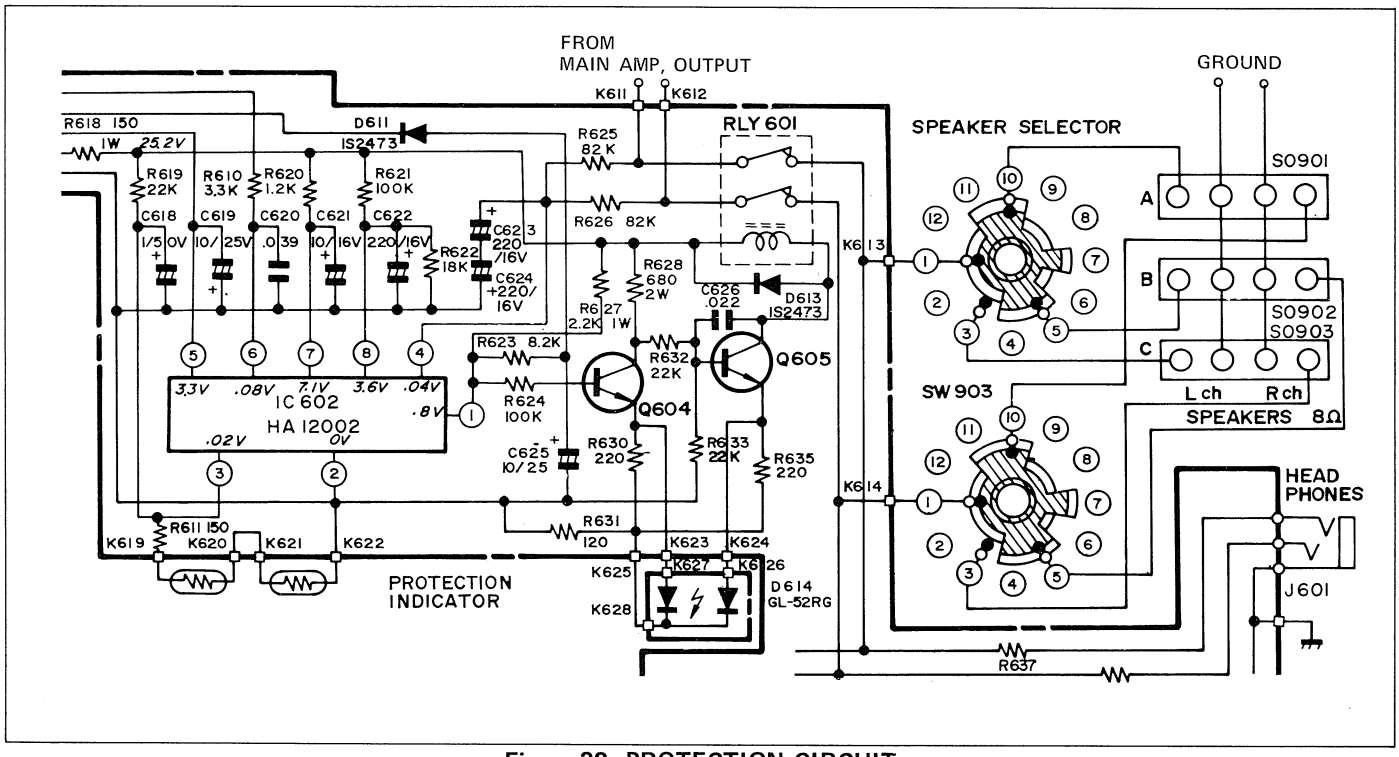

Figure 32 PROTECTION CIRCUIT

Digitized By RidgeDweller
For Free Distribution
DO NOT PAY FOR THIS DOCUMENT

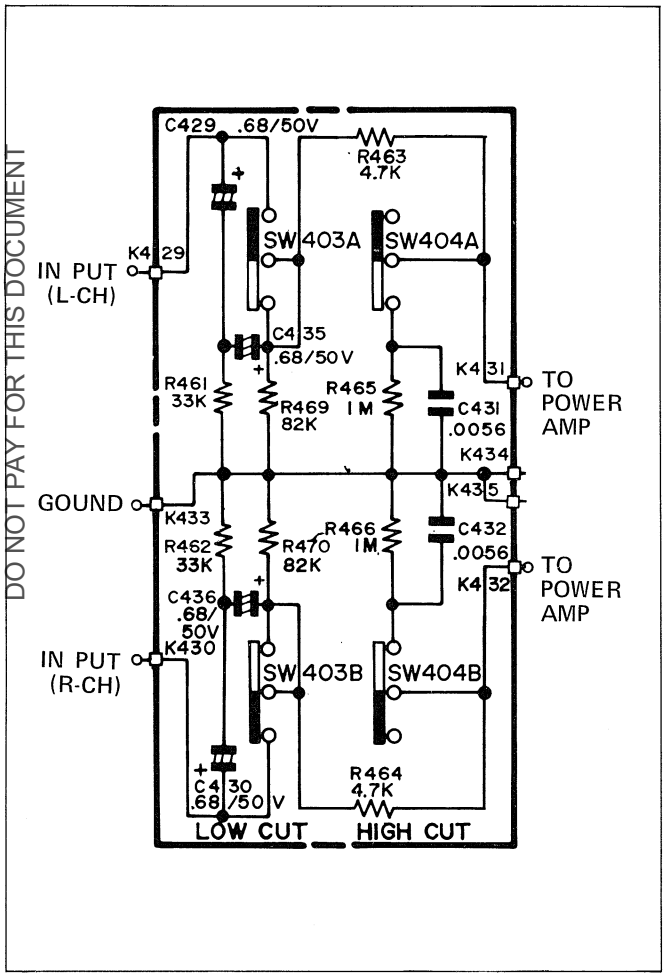

Figure 33

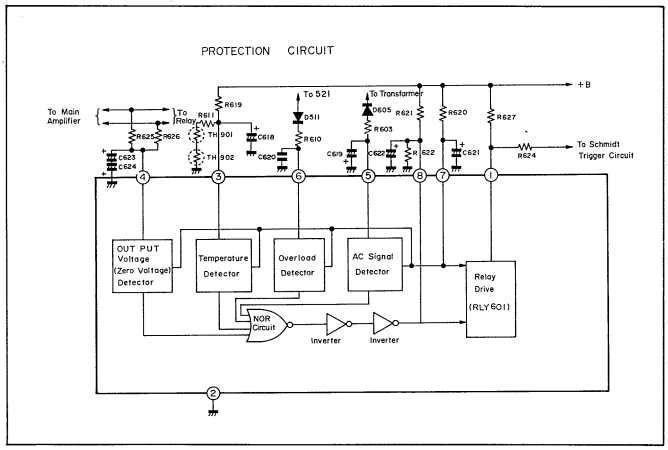

Figure 34

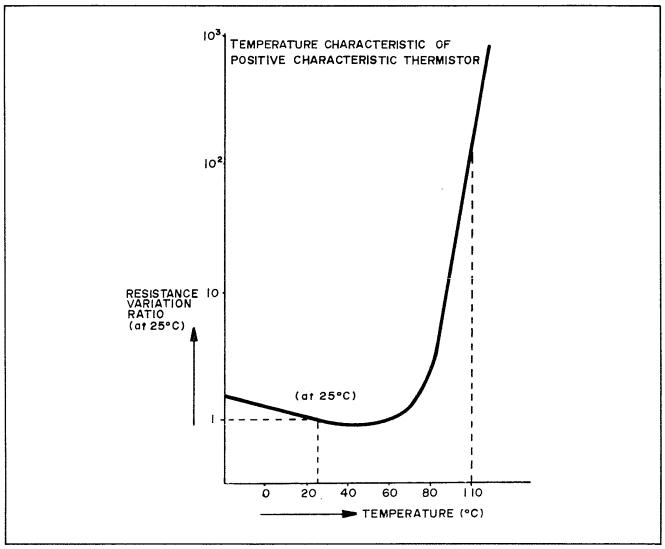

Figure 35

POWER SUPPLY CIRCUIT

1. Main Amplifier Power Supply Circuit
   This power supply circuit which deals with rather a larger current needs to resist, by itself, against its big output power and to meet this requirement, it has two power supplies, one each for the right and left chnnels thus reducing voltage fluctuations and crosstalk. The included capacitors C709, C710, C711 and C712 are each featured by a large capacitance and high performance stability and this advantage allows the main amplifier to provide enough output even in the lower frequency range, also with the damping factor being further improved.

2. Preamplifier Power Supply Circuit
   This power supply circuit is composed of transistors Q601 and Q602 (serving as ripple filter), Zener diodes ZD601, ZD602, ZD603 and ZD604, and capacitors C609 and C610, all of which form a so-called regulated power circuit. The resultant power is thus made to have less fluctuation and then supplied to the equalizer circuit and tone circuit.

3. Tuner power Supply Circuit
   This power supply circuit is of a regulated power type consisting of transistor Q603 (serving as ripple filter), Zener diode ZD605 and capacitor C616.
   Note that a power supply for the tuner is controlled by the tuner switches SW902a and SW902b which are independent of the máin power switch SW901 used to cause other power supplies. The resultant power is applied to the dial illuminating lamps PL901, PL902, PL903, PL904 PL905 and PL906 and tuner circuit.

Digitized By RidgeDweller
For Free Distribution
DO NOT PAY FOR THIS DOCUMENT

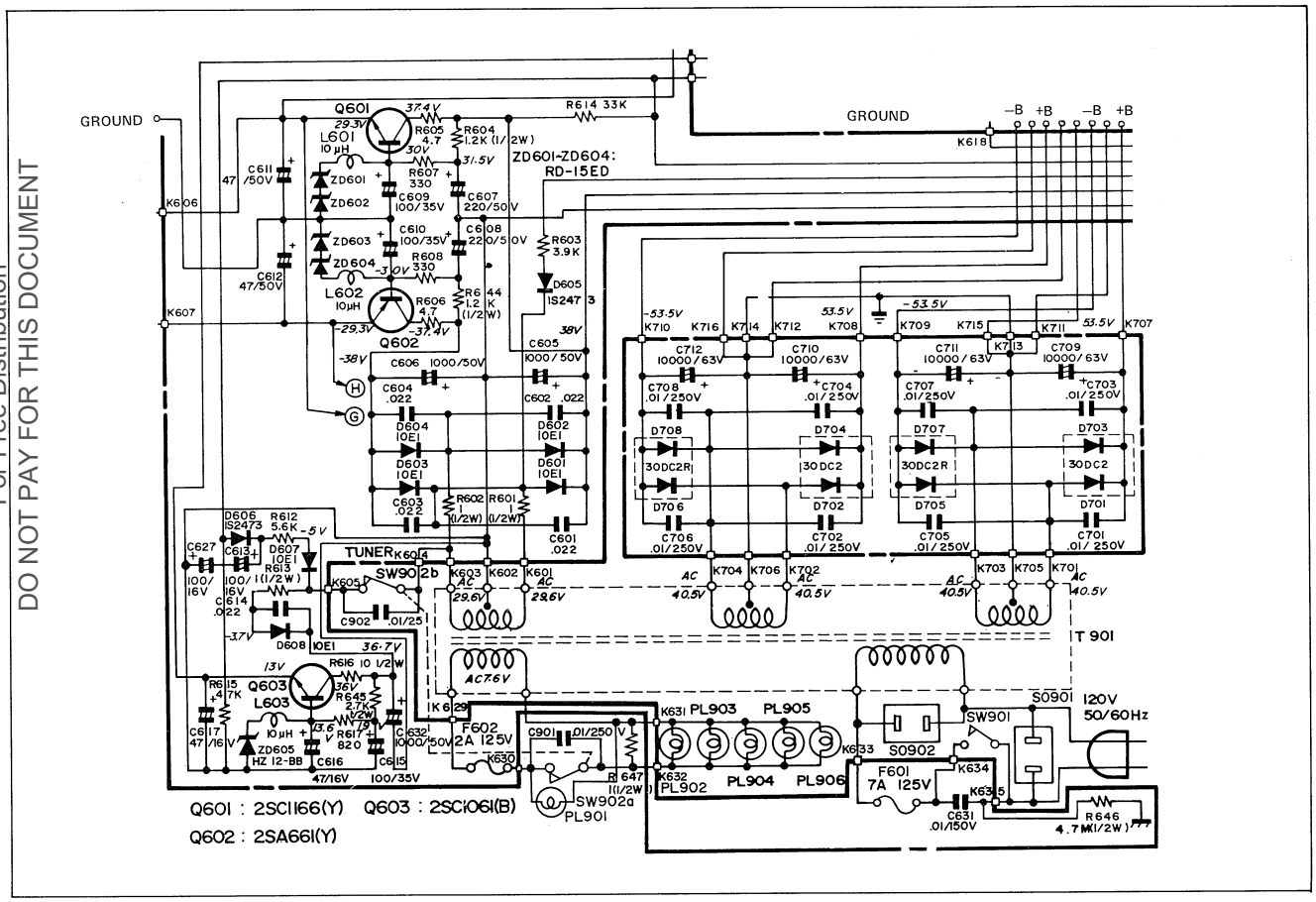

Figure 36 POWER SUPPLY CIRCUIT

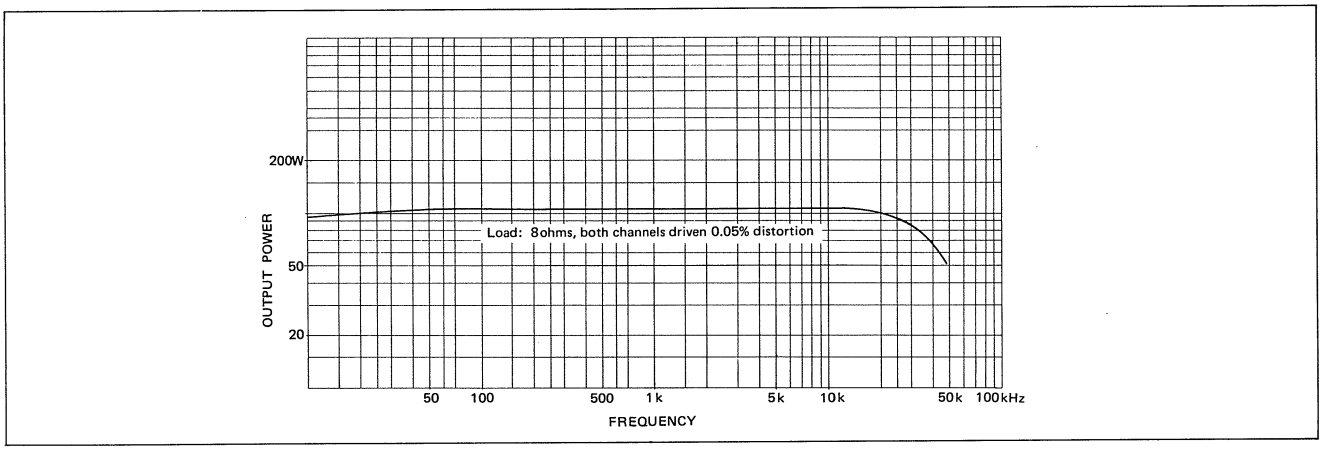

Figure 37 POWER BANDWIDTH CHARACTERISTIC

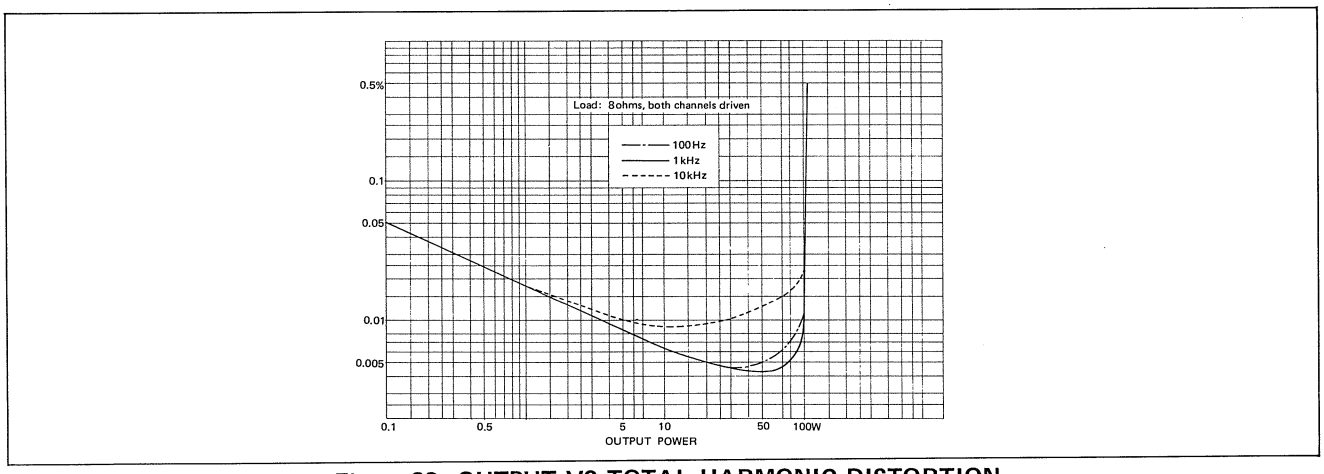

Figure 38 OUTPUT VS TOTAL HARMONIC DISTORTION

POWER METER DRIVE CIRCUIT

The main component of this meter drive circuit is an integrated circuit IC601 which assures a simutaneous power driving for both the right and left channels; the peripheral components are capacitors, resistors and semi-variable resistors. The 1/4 power compressor circuit included in the IC601 enables the power meters to indicate the source output in the range of 0.01W to 300W.

The resistors R638 and R641 are to determine the amount of input current for the IC601. The semi-variable resistors VR 601 and VR602 are used to adjust so that the power meters M903 and M904 will respectively read the rated output value provided that input current for the IC601 is set to 1 mA. The resistors R639 and R640 are to function when input current for the IC601 is shut off by the relay RLY 601, so that they prevent the IC601 from picking up possible noises at that time, thereby the power meters getting free from any mis-operation.

The capacitors C629 and C630 serve to decide the respective recovery time of the power meters.

Digitized By RidgeDweller
For Free Distribution
DO NOT PAY FOR THIS DOCUMENT

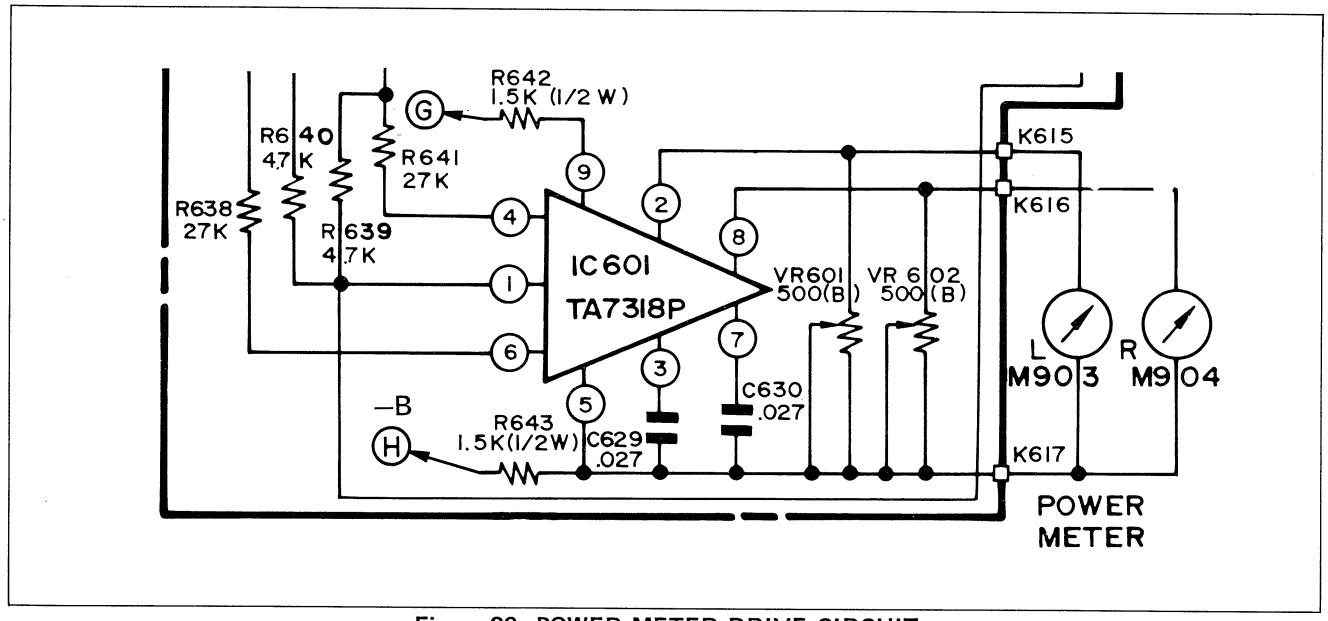

Figure 39 POWER METER DRIVE CIRCUIT

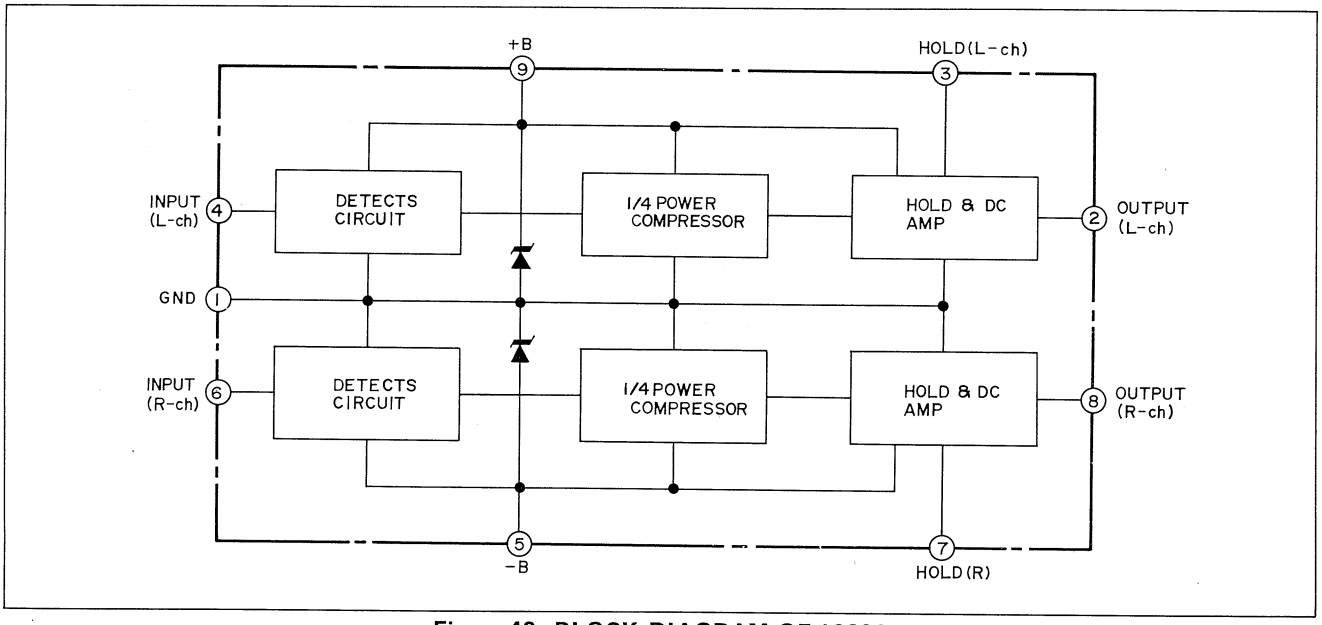

Figure 40 BLOCK DIAGRAM OF IC601

RECORDING OUTPUT CIRCUIT

This output circuit is to function under control of the recording output selector switch and with this provision, it is allowed for you to record a different source from that having been selected by the function selector switch.

For instance, if you want to record in the unit from a record player, even while listening to FM broadcast through the speaker which has been designated by the function selector switch, change the record output selector switch from "source" to "phono" position. Then sounds from the player will be recorded in the unit, with FM broadcast still coming out of the speaker.

Digitized By RidgeDweller
For Free Distribution
DO NOT PAY FOR THIS DOCUMENT

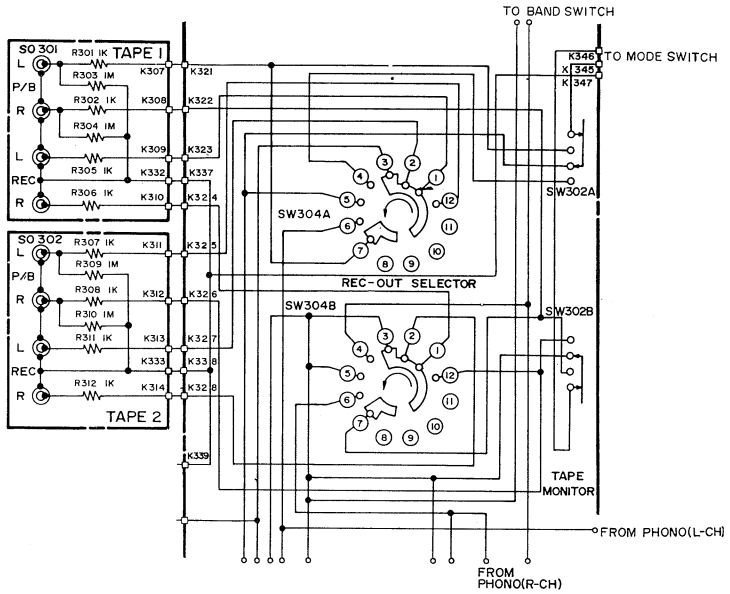

Figure 41-1 RECORDING OUTPUT CIRCUIT

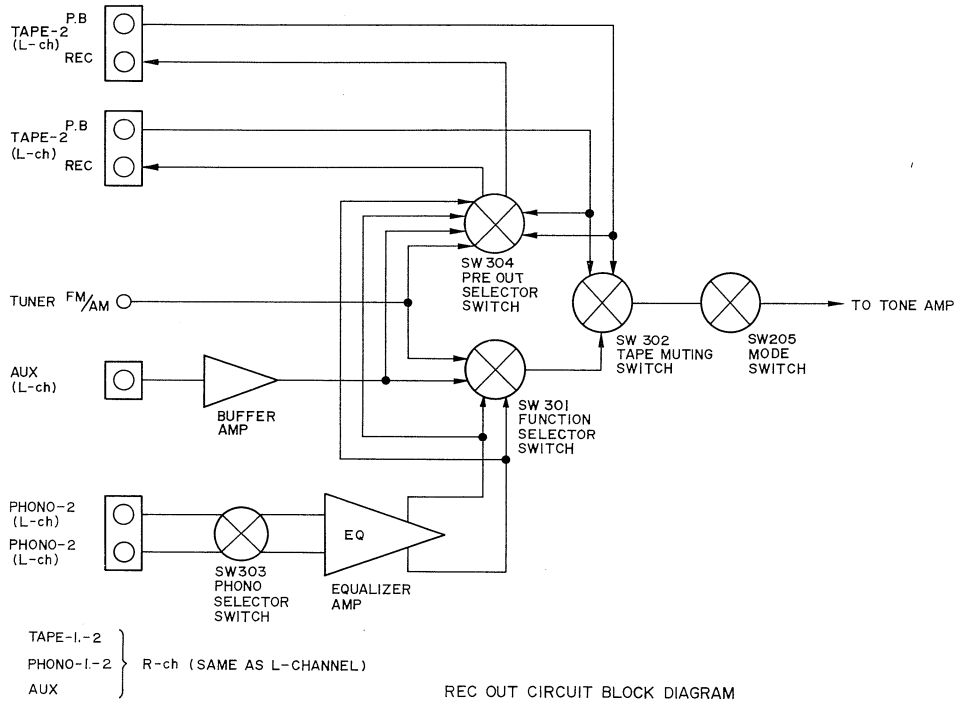

Figure 41-2 RECORDING OUTPUT CIRCUIT BLOCK DIAGRAM

ALIGNMENT INSTRUCTIONS

Alignment is an exacting procedure and should be undertaken only when necessary. If alignment of AM and FM is required, either section may be done first. The FM stereo section, however, should be done only if the FM monaural section is properly adjusted.

Digitized By RidgeDweller
For Free Distribution
DO NOT PAY FOR THIS DOCUMENT

REQUIRED EQUIPMENT

1. Signal generator with a frequency range of 450kHz to 1,650kHz; AM
2. Signal generator with a frequency range of 86.1MHz to 109.2MHz; FM
3. Vacuum tube voltmeter (AC-VTVM)
4. Sweep signal generator with a sweep range of at least 500kHz and center frequency of 10.7MHz with at least a 10.7MHz marker may be used. (For FM)
5. Sweep signal generator with a sweep range of at least 50kHz and center frequency of 455kHz with at least a 455kHz marker may be used. (For AM)
6. Oscilloscope with a wide range amplifier of approximately 100kHz.
7. Test loops, a coil of any size wire, one turn or more; AM
8. Vacuum tube voltmeter (DC-VTVM)
9. FM stereo signal generator.
10. Audio signal generator with a frequency range of 20Hz to 100kHz.
11. Frequency counter with a frequency range of approximately 100kHz.

Notes:

Allow the set at least five minutes to warm up before attempting alignment. During alignment keep the signal generator output at the lowest level that will maintain a usable output from the set.

For the adjustment of stereo separation, the FM stereo generator output is usually 1,000μV. Incorrect grounding to the metal chassis may pick up an unwanted 10.7MHz signal from the final IF stage, which will cause a regenerative sweep response on the sweep curve and result in misalignment.

Therefore always connect a ground to point.

Ground connection of signal generator:	Chassis ground
Generator modulation (AM):	30%, 400Hz
Generator modulation (FM):	75kHz, 1,000Hz
Generator modulation (FM stereo):	Ch. L. or Ch. R. 67.5kHz, 1,000Hz Mod.

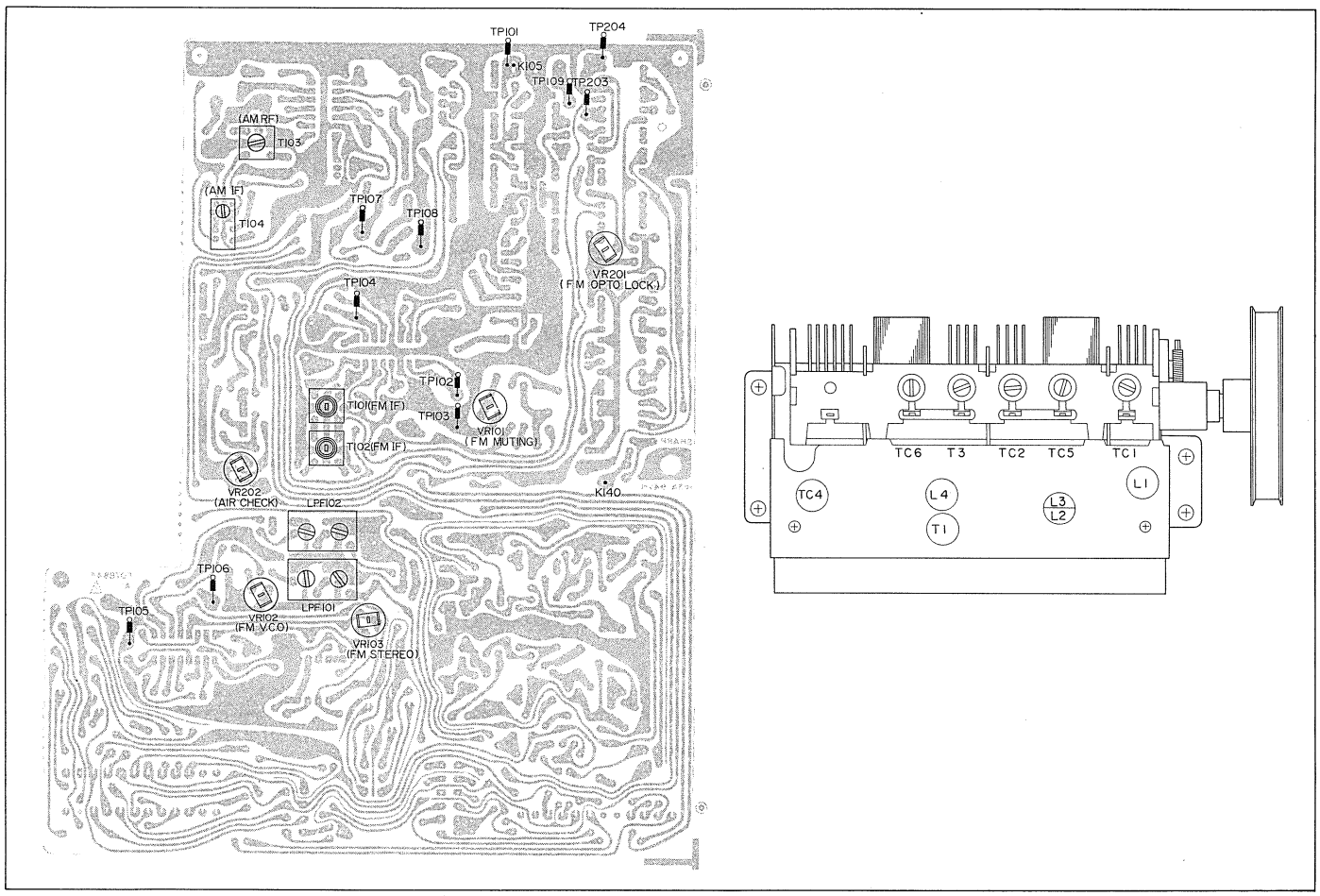

Figure 42 ALIGNMENT POINTS OF RF/IF P.W. BOARD

Digitized By RidgeDweller
For Free Distribution
DO NOT PAY FOR THIS DOCUMENT

AM IF ALIGNMENT

PROCEDURE NUMBER	SWEEP GENERATOR		DIAL POINTER SETTING	SELECTOR SETTING	SCOPE CONNECTION	ADJUSTMENT	REMARKS
	CONNECTION	FREQUENCY					
1	Connect AM sweep generator to the VC5 and it's case(ground). Keep the input be closed as much as possible.	455 kHz (Central frequency of ceramic filter)	High end of Dial	Function selector switch (AM)	Oscilloscope is connected between TP107 and TP108 (ground)	T104	Maximum response at 455 kHz

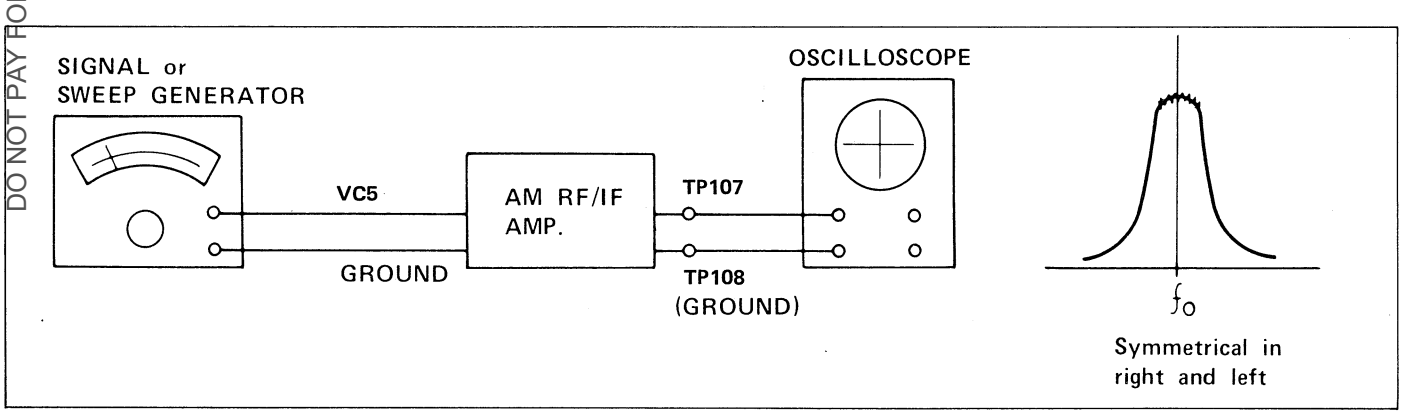

Figure 43 AM IF ALIGNMENT EQUIPMENT CONNECTIONS

AM RF ALIGNMENT

PROCE-DURE NUMBER	TEST STAGE	SIGNAL GENERATOR		DIAL POINTER SETTING	SELECTOR SETTING	SCOPE CONNECTION	ADJUSTMENT	REMARKS
		CONNECTION	FREQUENCY					
1	Band Coverage	Connect AM signal generator to the loop antenna and place this assembly at near the bar antenna coil (L902) (Keep the input be closed as much as possible).	515 kHz Modulated	Low end of Dial	Function selector switch (AM)	Oscilloscope is connected between TP107 and TP108 (ground)	Oscillator Coil T103	Adjust for maximum output
2		Same as above	1650 kHz Modulated	High end of Dial	Same as above	Same as above	Oscillator Trimmer TC6	Same as above. Repeat steps 1 and 2, 2 or 3 times.
3	Tracking	Same as above	1400 kHz Modulated	Tuning in 1400 kHz	Same as above	Same as step 1	Antenna Trimmer TC5	Same as step 1
4		Same as above	600 kHz Modulated	Tuning in 600 kHz	Same as above	Same as step 1	Antenna Coil L902	Same as above. Repeat steps 3 and 4, 2 or 3 times.

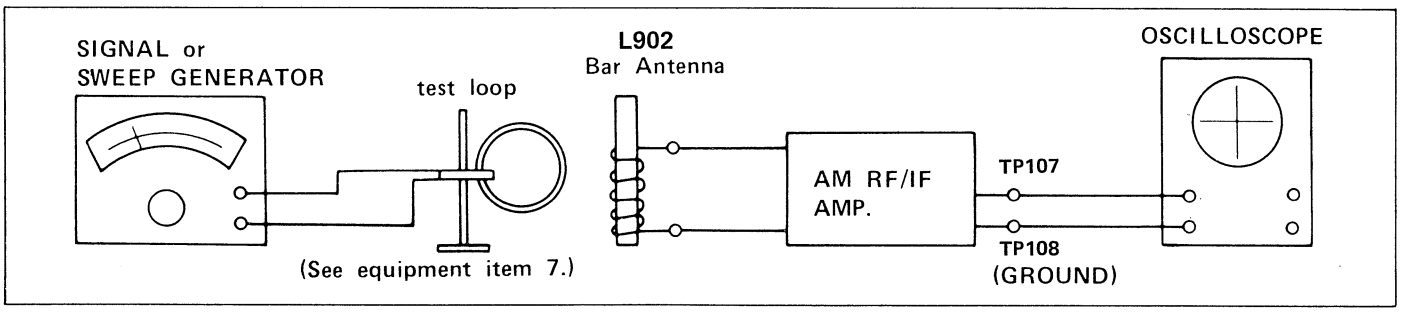

Figure 44 AM RF ALIGNMENT EQUIPMENT CONNECTIONS

Digitized By RidgeDweller
For Free Distribution
DO NOT PAY FOR THIS DOCUMENT

FM ALIGNMENT

Set the FM Muting switch (SW203) at "OFF" position and MODE switch (SW205A,B) at "mono" position.

PROCE-DURE NUMBER	TEST STAGE	SIGNAL GENERATOR		DIAL POINTER SETTING	SELECTOR SETTING	METER CONNECTION	ADJUSTMENT	REMARKS
		CONNECTION	FREQUENCY					
1	Make the test points TP203 and TP204 be shorted--this results in that the auto-lock circuit doesn't tend to operate.							
2	IF (Note 1)	Connect FM sweep generator, through 6PF capacitor, to the test point TP101. Connect the ground to the shield plate.	Central frequency of ceramic filter (as small as possible)	High end of Dial	Function selector switch (FM)	Connect an oscilloscope to the test points TP102 and TP103 (ground)	T1	Rotate the core of T1 to adjust so that the waveform becomes symmetrical in right and left and attains the maximum in height and width. (Fig. 46)
3	Detector	Connect FM sweep generator, through 6PF capacitor, to the test point TP101. Connect the ground to the shield plate.	Same as above	Same as above	Function selector switch (FM)	Connect an oscilloscope to the test points TP104 and TP103 (ground)	IFT101, IFT102	Rotate the core to adjust so that the waveform (Fig. 47) becomes symmetrical in the upper and lower with the best linearity.
4	Repeat the steps 1 and 2 until no further improvement can be made.							
5	Band Coverage	Connect FM signal generator to the FM antenna terminals. (Keep the input be closed as much as possible)	87.0 MHz (Modulated) as small as possible	Low end of Dial	Function selector switch (FM)	Connect VTVM to the test points TP104 and TP103 (ground)	Oscillator Coil L6	Adjust for maximum output
6	Band Coverage	Same as above	109 MHz (Modulated) as small as possible	High end of Dial	Same as step 4	Same as above	Oscillator Trimmer TC4.	Same as above
7	Tracking	Same as above	90 MHz (Modulated) as small as possible	Tuning in 90 MHz	Same as step 4	Same as step 4	Antenna Coil L1 and RF Coil L2, L3.	Same as above
8	Tracking	Same as above	106 MHz (Modulated) as small as possible	Tuning in 106 MHz	Same as step 4	Same as step 4	Antenna Trimmer TC1 and RF Trimmer TC2, TC3.	Same as above
9	Repeat the steps 4 to 7 until no further improvement can be made.							
10	After all of the adjustments, make the test points TP203 and TP204 be disconnected from each other.							

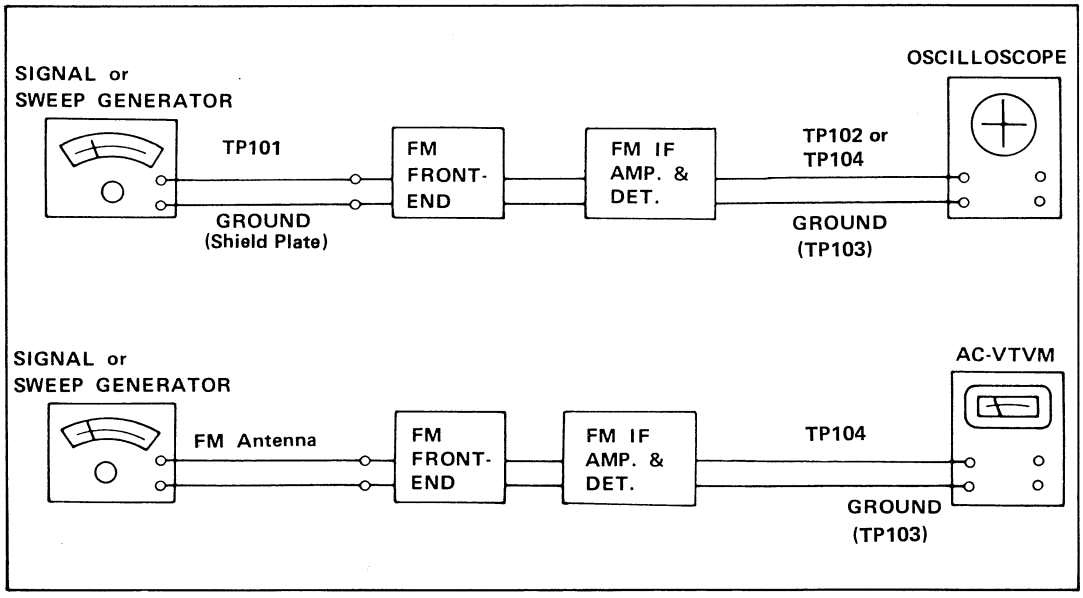

Figure 45 FM ALIGNMENT EQUIPMENT CONNECTIONS

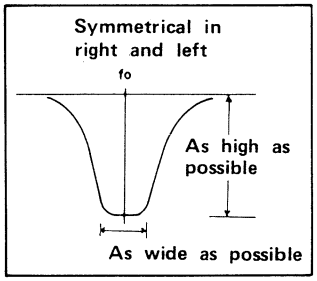

Figure 46 "IF" CURVE

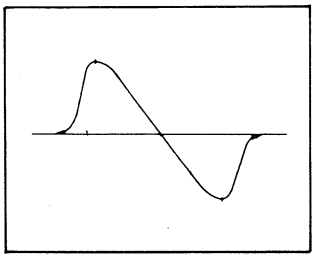

Figure 47 "S" CURVE

NOTE As for FM high-frequency range (front-end section), since it has been already adjusted, do not rotate the coils and trimmers unless the adjustment becomes necessary -- readjust the FM-high frequency only when it suffers a considerable disalignment.

Digitized By RidgeDweller
For Free Distribution
DO NOT PAY FOR THIS DOCUMENT

Note 1

The ceramic filter used for this set is available in 3 types and each of them is given a color indication to differentiate the central frequency from that of the others, as described below. In the actual use, be sure to make 4 ceramic filters of the same type (the same color) as a pair to put them in the set. When other ceramic filters than that given red color indication (with the central frequency of 10.7MHz) are used, note that with such filters the marker (10.7MHz) of FM sweep generator will be deviated; therefore be sure to cut off the marker at the time of the adjustment.

Central frequency (f_0)	B	Blue	10.67MHz ± 0.03MHz
	A	Red	10.70MHz ± 0.03MHz
	C	Orange	10.73MHz ± 0.03MHz

(4 ceramic filters to be used in a set as a pair should be of the same type (the same color).)

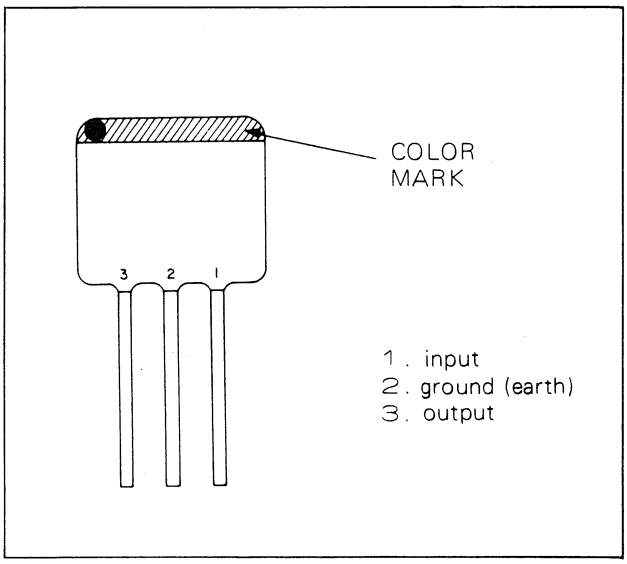

Figure 48

FM TUNING METER ADJUSTMENT AND DISTORTION FACTOR ADJUSTMENT

1) Set the frequency of FM signal generator to 98 MHz (75 kHz deviation, 1000 Hz), fully close the output and connect such signal to the FM antenna terminal of the set through a dummy resistor of 300 ohms.
2) Connect a dummy resistor of 8 ohms to the speaker terminal of the set.
3) Set the switches and controls of the set to the respective positions shown below and turn on the power switch. [Low cut filter—off, High cut filter—off, Bass, Treble and Balance controls—center (zero), Mode—mono, Loudness—off, Volume control—min., Tape-1 and-2— source, Function selector—FM, FM muting—off, air check—off]
4) Keeping the output of FM signal generator be fully closed (that is, with no signal given), rotate the core of T101 to have the pointer of the tuning meter indicate the center (around "98 MHz" position).
5) Adjust the output of FM signal generator to 60 dB, make the set be tuned to this signal so that the tuning meter indicates its center and under the condition, adjust the core of T102 so that the distortion will be minimized.
6) Fully close the output of FM signal generator and make sure the pointer of the tuning meter is at the center.
7) Repeat the steps 1) to 6) until the best point will be found.

ADJUSTMENT OF AIR CHECK CAL.

Produce 98 MHz, 60 dB FM mono signal (modulation 100%, 400 Hz) by a signal generator to apply it to the antenna of the unit and read the output voltage.
Next, set AIR CHECK switch to "ON" position, then the output voltage will vary. Adjust semi-fixed resistor VR202 so that the output voltage with AIR CHECK switch set to "ON" becomes about 60% (—4.4 dB), of that with AIR CHECK switch kept at "OFF".

FM OPTO LOCK/MUTING ADJUSTMENT

1. Keeping the band selector switch (SW205) to 'FM mono' position, connect a 300ohm dummy resistor and FM signal generator to the FM antenna terminal (300ohms).
2. Make the test points TP203 and TP109 be shorted -- this results in that the opto lock circuit won't operate.
3. Make the output of FM signal generator be 98MHz and 1000Hz [75kHz deviation, 60dB (1mV)] and let the set be tuned in such signal with the tuning meter's pointer being at the center.
4. Under this condition, have the test points TP203 and TP109 be disconnected from each other.
5. Rotate the semi-fixed resistor VR201 so as to get the opto-lock circuit be locked.
locked, the light emitting diode (D207) of the locked indicator lights up.]
6. Despite the above, if the locked indicator is found to blink repeatedly, rotate the semi-fixed resistor VR201 until it will be able to light up completely. At the time, see that the tuning meter's pointer is coming to the center.
7. Make the output of FM signal generator be 20dB and keeping the muting switch to 'muting on', rotate the semi-fixed resistor VR101 to adjust so that the signal can undergo the muting with the output of FM signal generator being set to 20dB.
8. After the adjustments, have the test points TP203 and TP109 be disconnected from each other.

Digitized By RidgeDweller
For Free Distribution
DO NOT PAY FOR THIS DOCUMENT

FM STEREO V.C.O. AND SEPARATION ADJUSTMENT

1) Connect FM signal generator, through a dummy resistor of 300 ohms, to the FM antenna terminal of the set.
2) As to setting of the switches and controls, take the same procedures as in the step 3 "FM TUNING METER ADJUSTMENT AND DISTORTION FACTOR ADJUSTMENT".
3) Set the frequency of FM signal generator to 98 MHz (75 kHz deviation, 1000 Hz) and the output to 60 dB (mono signal), place the mode switch of the set to the position "stereo" and let the set be exactly tuned to such signal. (FM muting switch is kept to the position "muting off".)
4) Connect VTVM, to the test point TP106, TP105 and a frequency counter to the output terminal of VTVM.
   Make the test points TP104 and TP108 (ground) of the set be connected (shorted). Rotate the semi-fixed resistor VR102 to adjust so that the frequency counter will read 76.00 kHz ± 200 Hz. (After the adjustment; reset the connection between the test points TP104 and TP108).
5) Connect FM stereo modulator to FM signal generator. At the time, the following should be set: modulation frequency; 1 kHz (L + R; 33.75 kHz, L − R; 33.75 kHz, pilot (19 kHz); 7.5 kHz deviation).
6) Set the frequency of FM signal generator to 98 MHz and its output to 60 dB, tune the set in such signal so that the tuning meter will indicate the position "center". Set the modulator so as to cause modulation only in L-channel and consider the output of L-channel as 0 dB. Connect VTVM to the output terminal (R-channel side only) of the set and adjust semi-fixed resistor VR103 so that the separation becomes maximum (the output leaking to the opposite channel is minimized.)
   Take the above procedures also for checking the separation of R-channel, then, adjust so that the separations of both channels will be equal to each other.

[If without the frequency counter, proceed with the alignment as follows. While receiving a FM stereo signal, turn the VR101 until the P.L.L. will be locked (when it is locked, the stereo indicator will be lit). Then, reversely turn the VR101 halfway and fix it.]

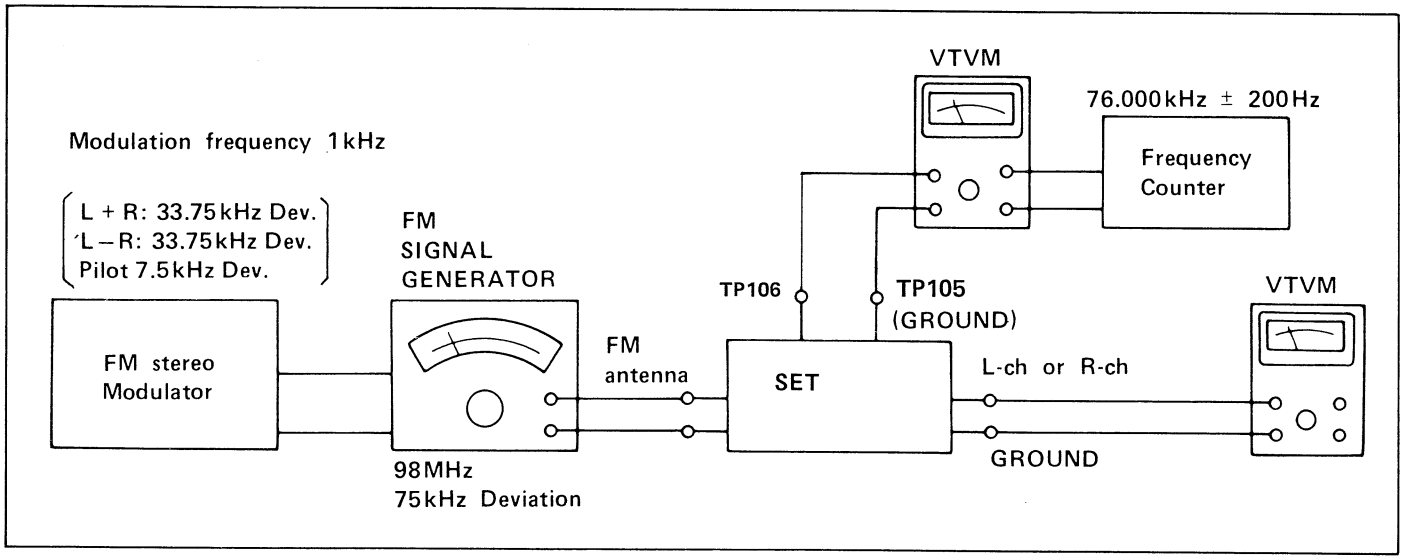

Figure 49 FM STEREO ALIGNMENT EQUIPMENT CONNECTIONS

ADJUSTMENT OF MAIN AMP CIRCUIT
(See Figure 50 and 52)

1. Check the power supply voltage.
2. Set the power switch SW901 to "ON" position.
3. Set the volume control to "0" position.
4. By using a signal generator (1kHz, 300mV), apply signals to the socket AUX located at the rear of the set and adjust the volume control and balance control so that the output signal of the speaker terminal becomes 1W = 2.8V. (See Figure 50)
5. Adjust VR601 (and/or VR602) so that the left channel output meter (and/or the right channel output meter) will indicate 1W.

Digitized By RidgeDweller
For Free Distribution
DO NOT PAY FOR THIS DOCUMENT

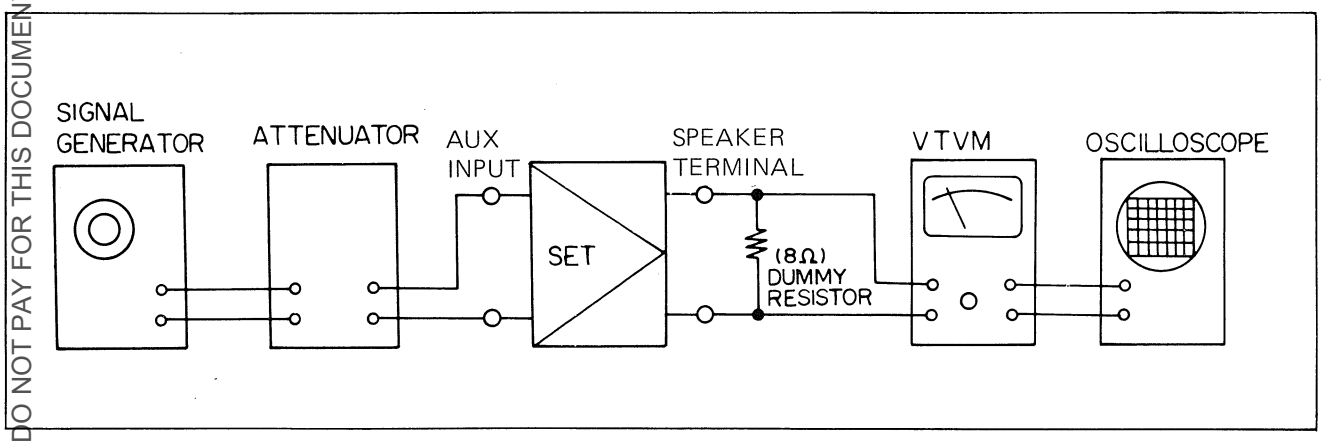

Figure 50

AF ALIGNMENT **(See Figure 51)**

1) Set the volume control to the position "minimum" and other switches to the position "mornal".
2) Rotate the semi-fixed resistors VR501 and VR502 fully counterclockwise.
3) Turn on the power switch of the set.
4) Use DC VTVM to make sure that the voltage between K503 and K511 (grond) and that between K504 and K512 (ground) are within the renge of ±30mV.

PROCEDURE NUMBER	ALIGNMENT	METER	OUTPUT INDICATOR	SETTING	ADJUSTMENT	REMARKS
1	Idle Current	DC V.T.V.M.	DC V.T.V.M. is connected between TP501(TP502) and TP503(TP504)	Volume is minimum position. Other knobs are normal position	VR501 (VR502)	10mV

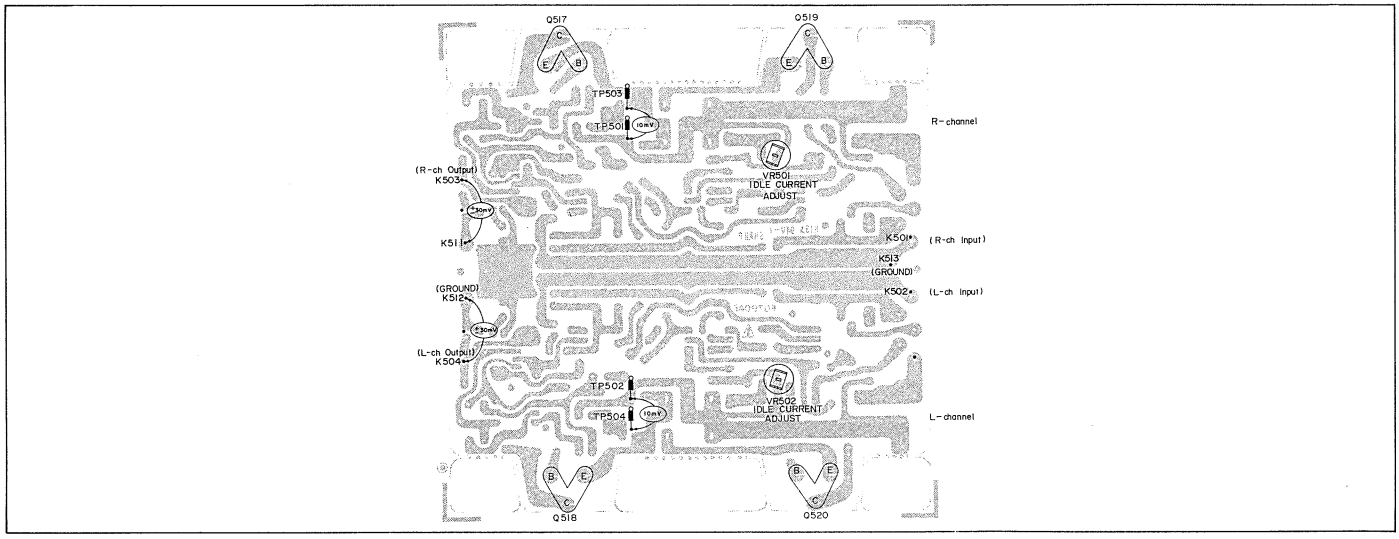

Figure 51 ALIGNMENT POINTS

Digitized By RidgeDweller
For Free Distribution
DO NOT PAY FOR THIS DOCUMENT

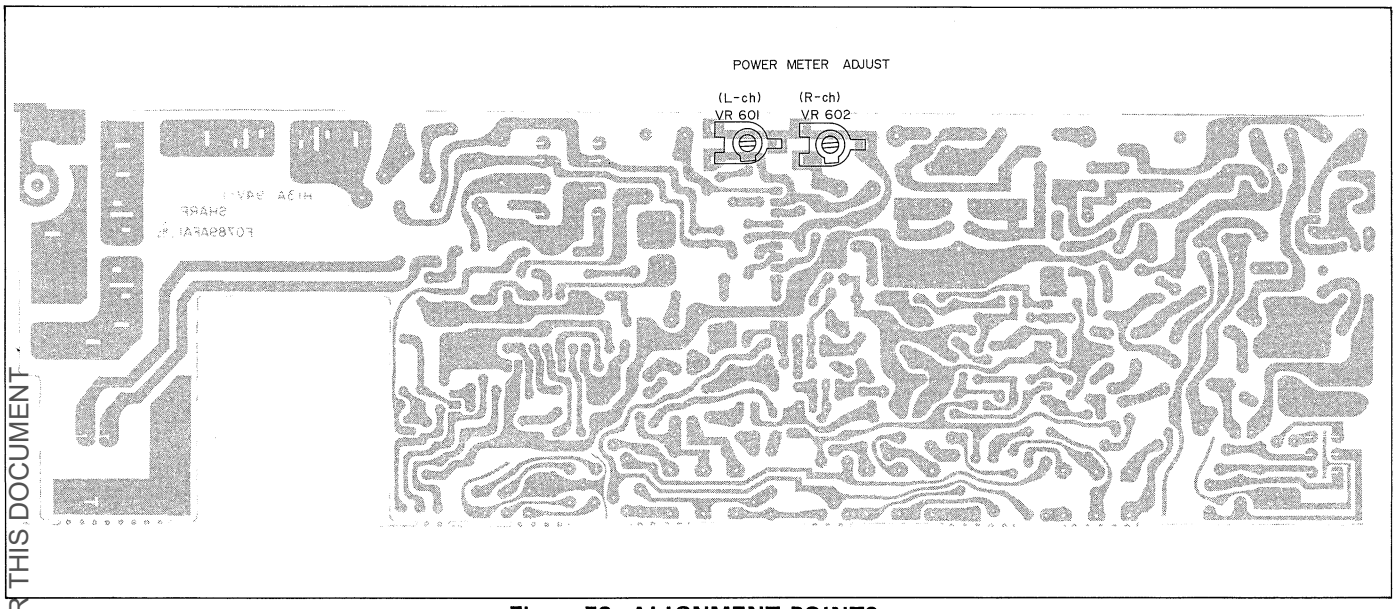

Figure 52 ALIGNMENT POINTS

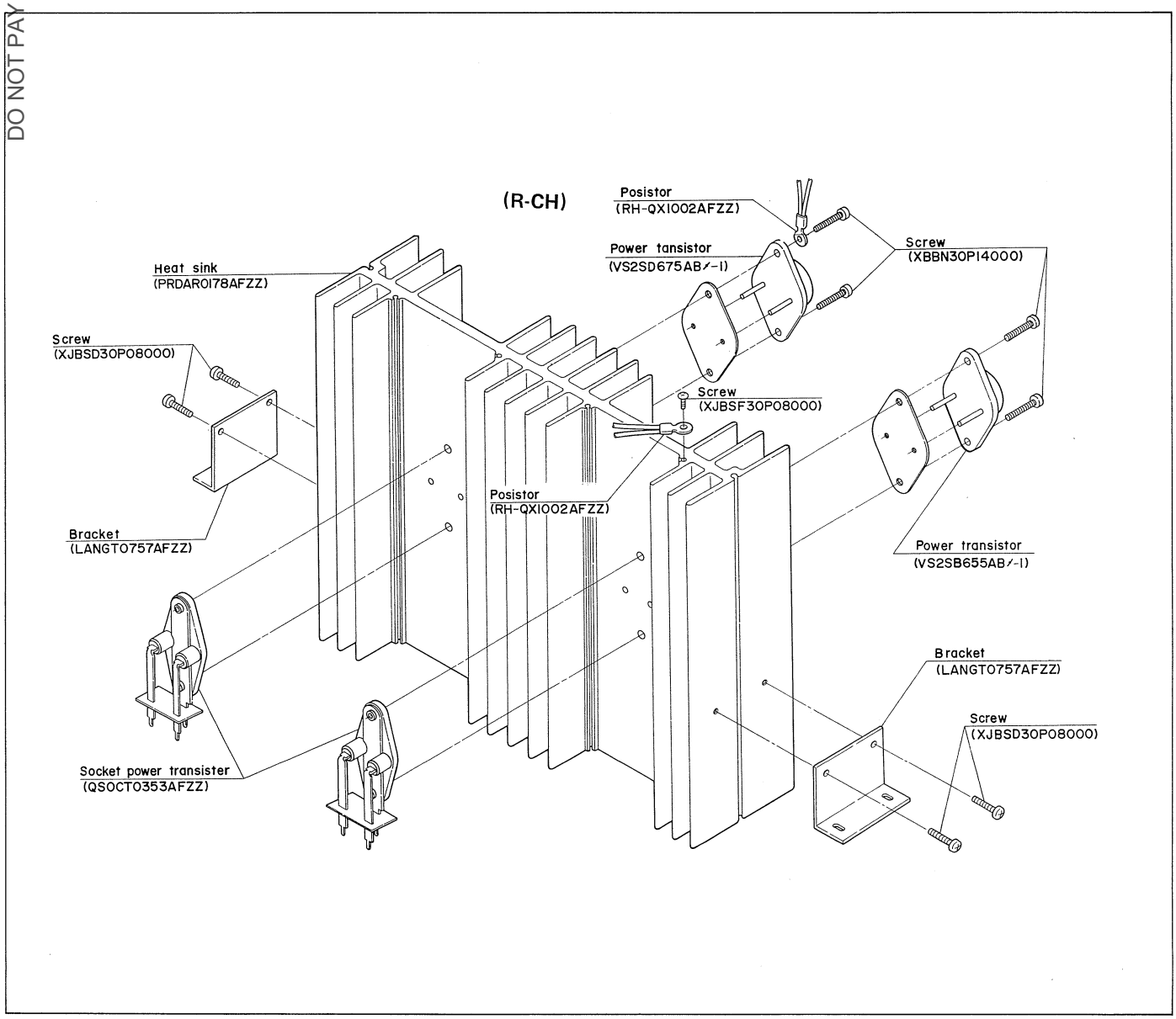

Figure 53 POWER TRANSISTORS REPLACEMENT

Digitized By RidgeDweller
For Free Distribution
DO NOT PAY FOR THIS DOCUMENT

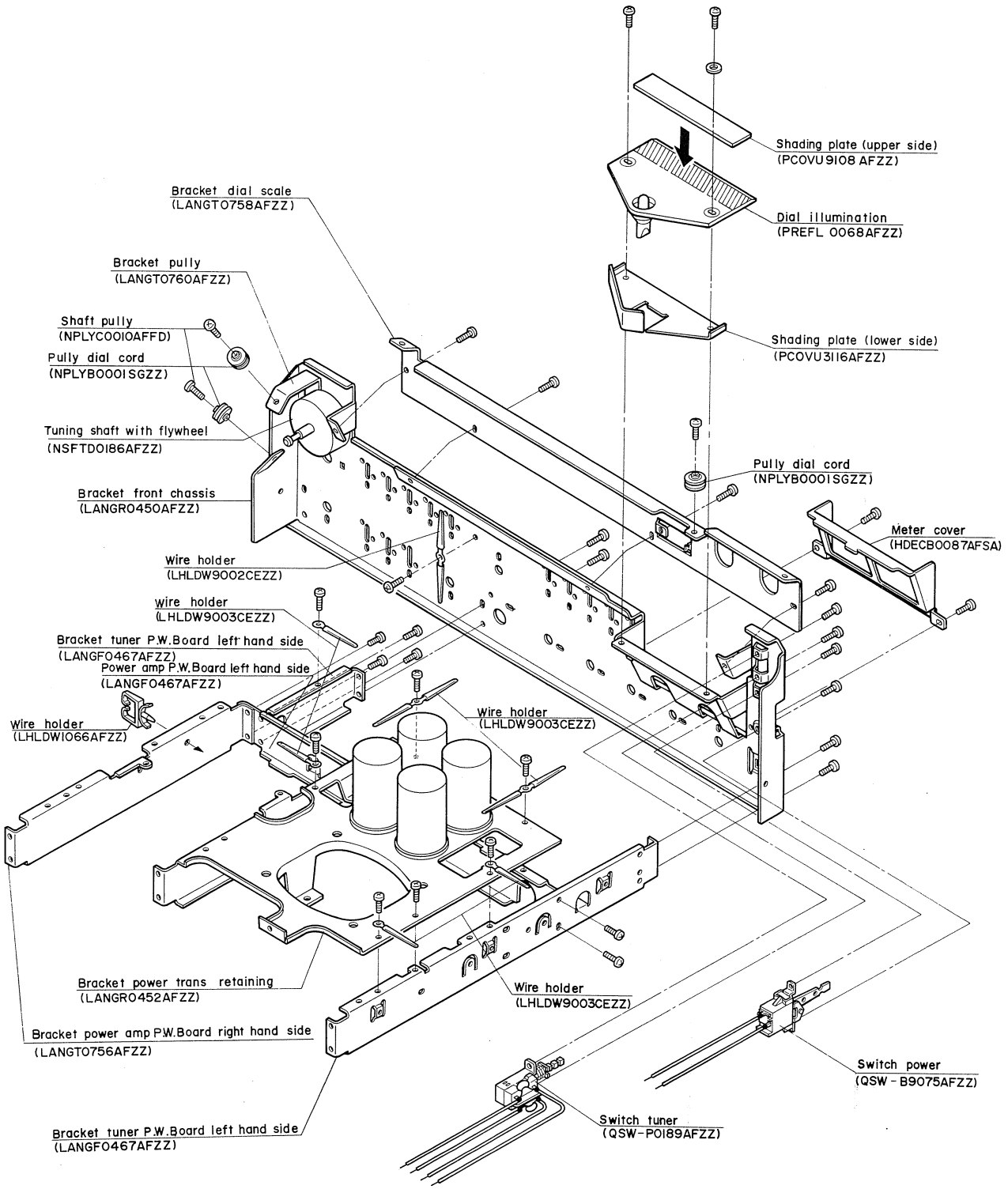

Figure 54 MISCELLANEOUS PARTS GUIDE

Digitized By RidgeDweller
For Free Distribution
DO NOT PAY FOR THIS DOCUMENT

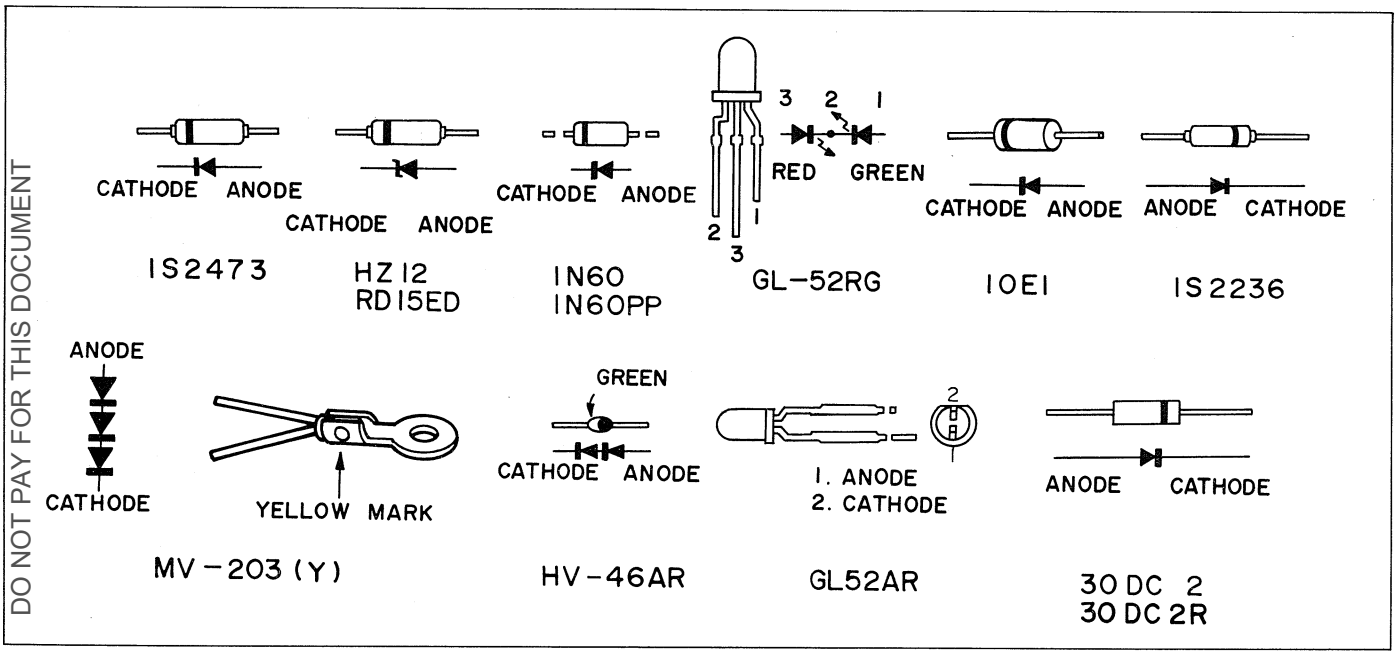

Figure 55 DIODE TYPES

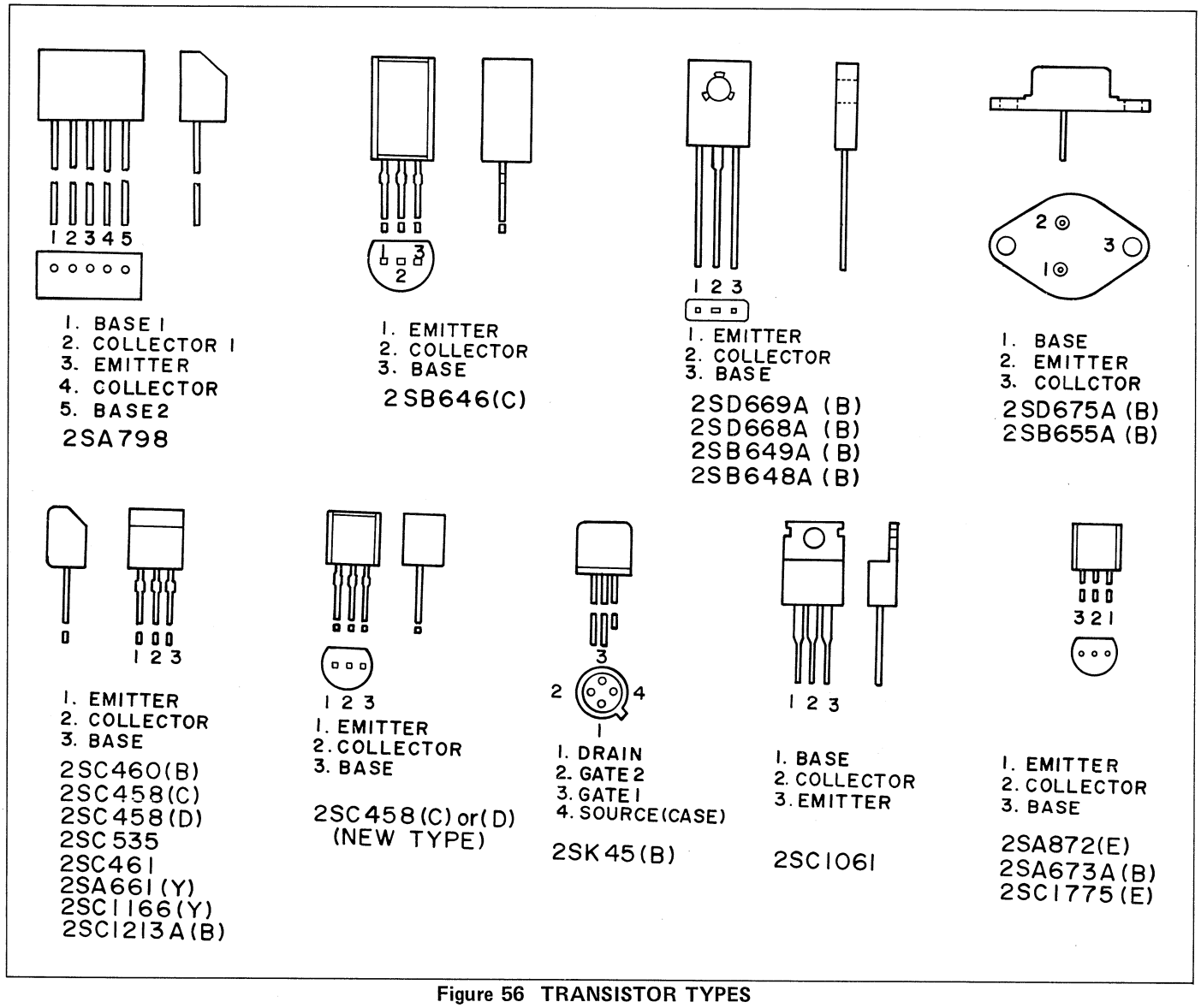

Figure 56 TRANSISTOR TYPES

Digitized By RidgeDweller
For Free Distribution
DO NOT PAY FOR THIS DOCUMENT

NOTES ON SCHEMATIC DIAGRAM

1. Frequency range: FM: 87.6 to 108 MHz
   AM: 520 to 1620kHz
2. IF: FM: 10.7 MHz, AM 455kHz
3. Resistor: To differentiate the units of resistors, such symbols as K and M are used: the symbol K means 1000Ω and the symbol M means 1000K Ω and the resistor without any symbol is Ω-type resistor. Besides, the one with "Fusible" is a fuse type.
4. Capacitor: To indicate the unit of capacitor, a symbol P is used; this symbol P means pF and the unit of the capacitor without such symbol is μF. As to electrolytic capacitor, the expression "capacitance/withstand voltage" is used. The symbols LL and LR for the electrolytic capacitor respectively mean low-leak type.
5. SW201: It is Band selector (FM/AM) switch ("FM" position).
6. SW202: It is Air check (off/on) switch ("off" position).
7. SW203: It is FM muting (on/off) switch (on position).
8. SW204: It is Hi-blend (off/on) switch.
9. SW205: It is Mode selector (stereo/mono) switch ("stereo position").
10. SW301: It is Function selector (Aux/turner/phono) switch ("AUX" position).
11. SW302: It is Tape monitor (tape1/source/tape 2) switch ("source" position).
12. SW303: It is Phono input selector (pono1/pono2) switch ("phono1" position).
13. SW304: It is Rec out selector (Aux/tuner source/phono/tape1→tape2/tape2→tape 1) switch ("AUX" position).
14. SW401: It is Muting (on/off) switch ("off" position).
15. SW402: It is Loudness (off/on) switch ("off" position).
16. SW403: It is Low cut filter (off/on) switch ("off" position).
17. SW404: It is High cut filter (off/on) switch ("off" position).
18. SW901: It is Power (on/off) switch ("off" position).
19. SW902: It is Tuner (on/off) switch ("on" position).
20. SW903: It is Speaker selector (A+B–B–OFF–A–C–A+C) switch ("A+B" position).
21. The indicated voltage in each section is the one measured by VTVM between such a section and the chassis with no signal being given.
22. Specifications or wiring diagrams of this model are subject to change for the improvement without prior notice.

■ **Identification of Capacitors**

As for the capacitors used in this set, they can be identified by the color indication on them concerning the nominal static capacitance, allowable error and characteristic.

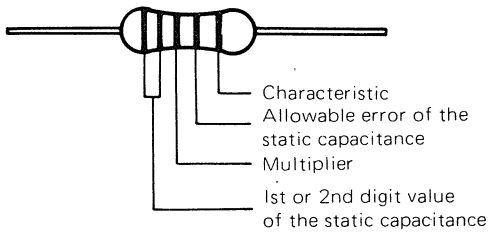

■ **Unit**

The values of static capacitance shown in the above table are of the unit pF (picofarad = micro-microfarad).

■ **The rated voltage of a capacitor can be seen from its ground color.**

Pink: . . . . . 25 V
Yellowish-green: . . . . . 50 V

Color difference	1st or 2nd digit value of the static capacitance	Multiplier	Allowable error of the static capacitance	Characteristic (*)
Black	0	10^0	±20% (M)	CH
Brown	1	10^1		LH
Red	2	10^2		D
Orange	3	10^3	±0.25pF (C)	PH
Yellow	4	10^4		RH
Green	5	–	±0.5pF (D)	SH
Blue	6	–		TH
Violet	7	–		UJ
Gray	8	–	±30% (N)	X
White	9	–		SL
Gold	–	10^{-1}	±5% (J)	
Silver	–	10^{-2}	±10% (K)	B

(*) JIS listed

Figure 57

Digitized By RidgeDweller
For Free Distribution
DO NOT PAY FOR THIS DOCUMENT

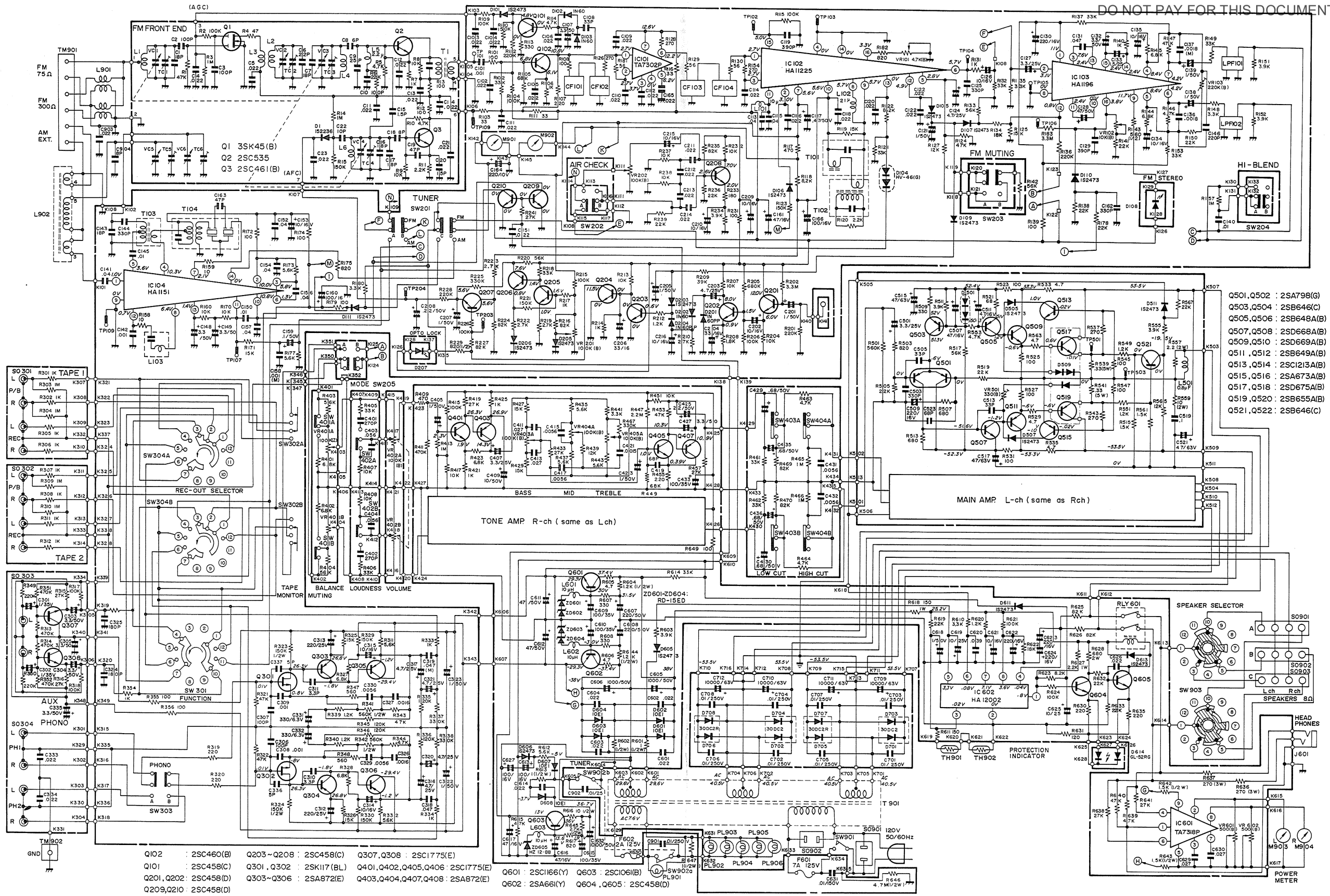

Figure 58 SCHEMATIC DIAGRAM

Digitized By RidgeDweller
For Free Distribution
DO NOT PAY FOR THIS DOCUMENT

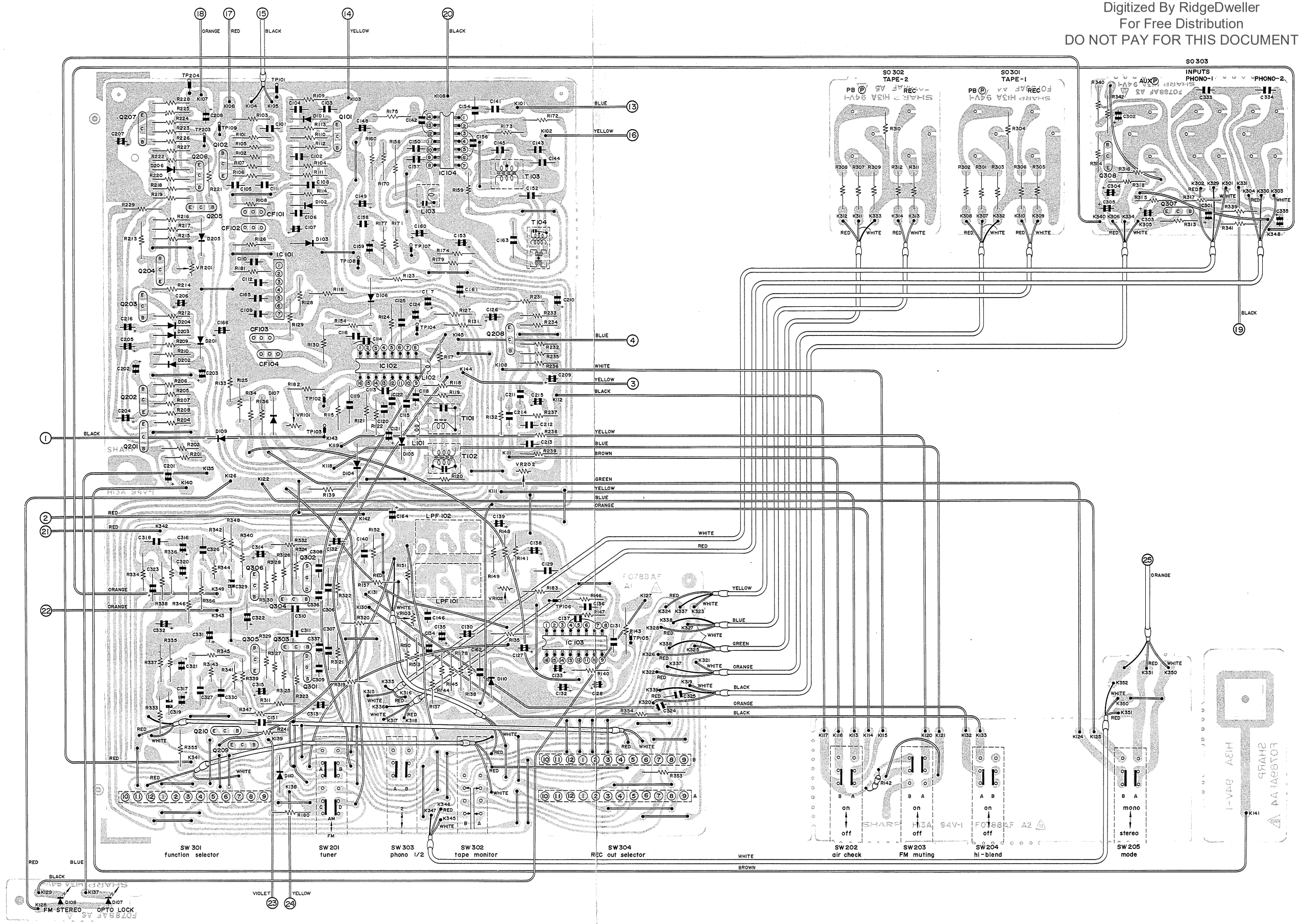

Figure 59 WIRING SIDE OF TUNER/EQ AMP CIRCUIT BOARD

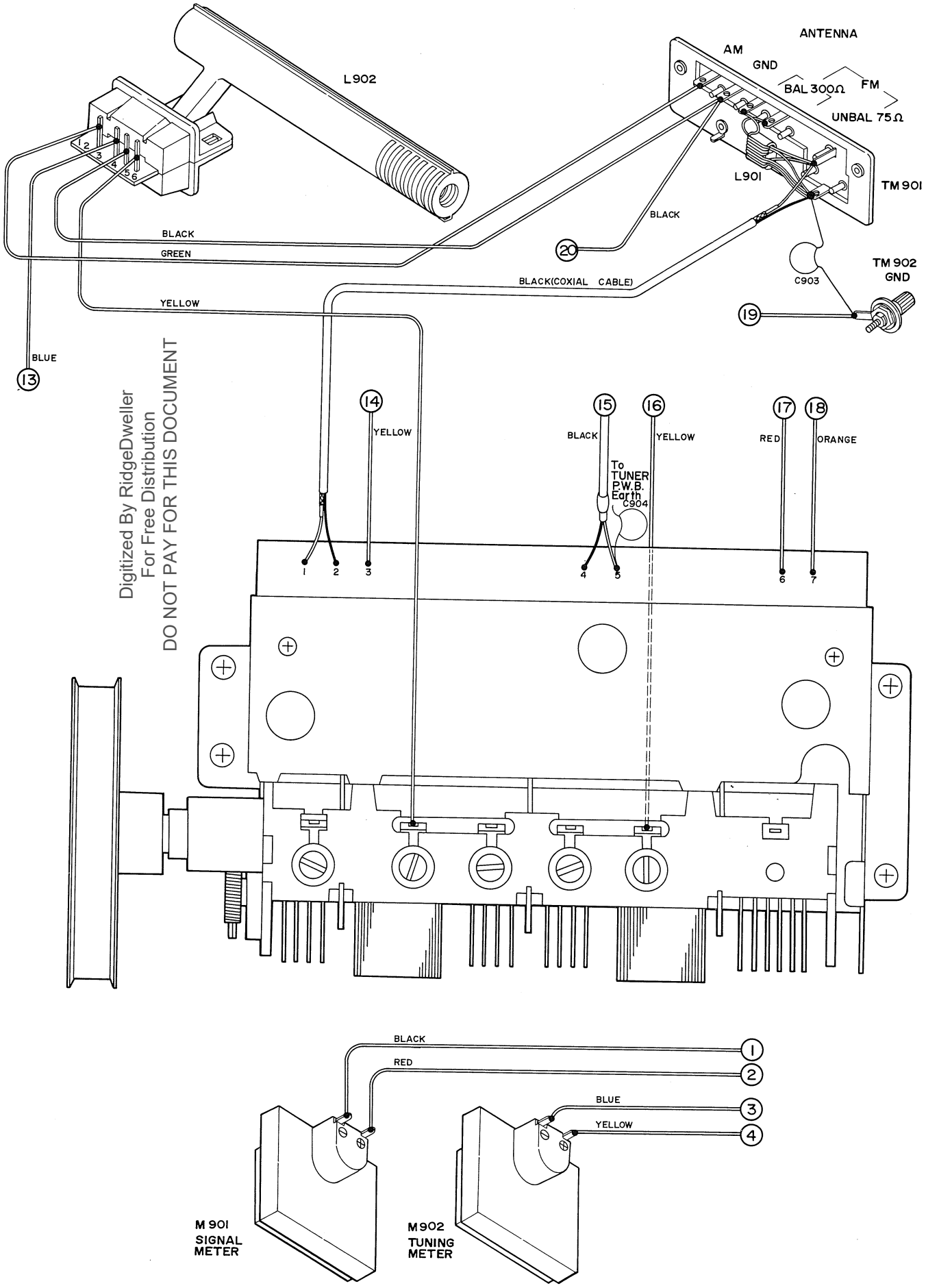

Digitized By RidgeDweller
For Free Distribution
DO NOT PAY FOR THIS DOCUMENT

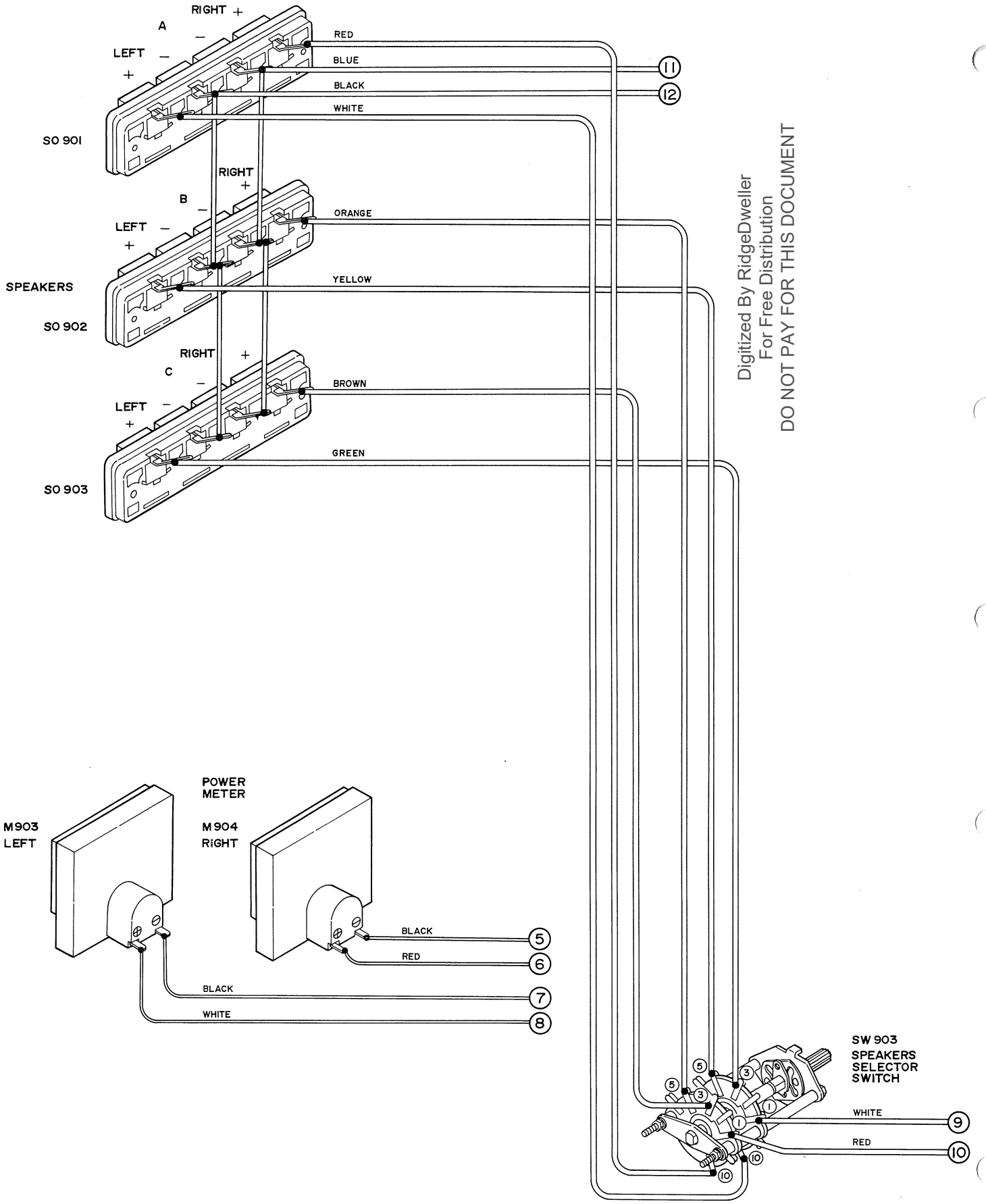

Digitized By RidgeDweller
For Free Distribution
DO NOT PAY FOR THIS DOCUMENT

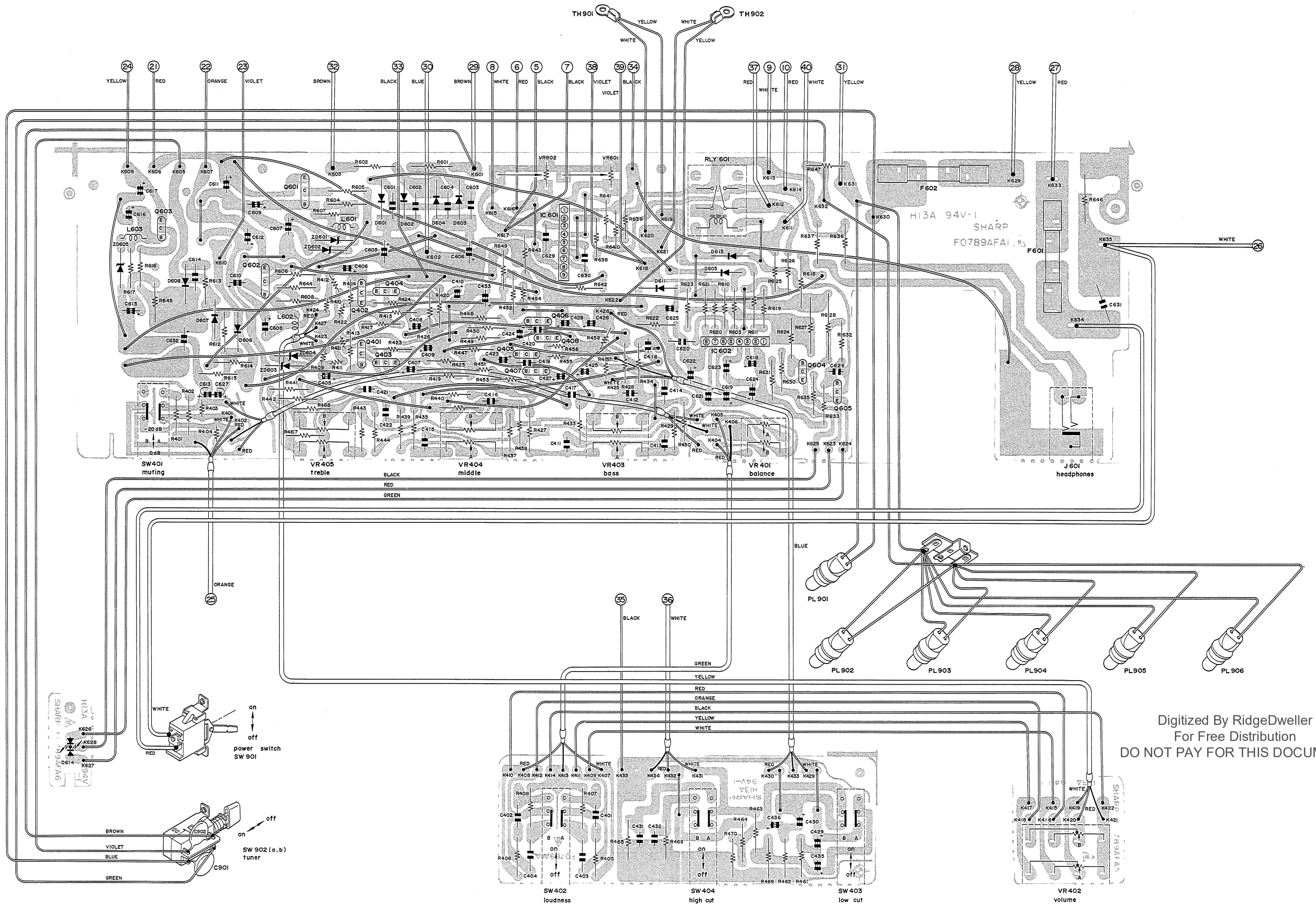

Digitized By RidgeDweller
For Free Distribution
DO NOT PAY FOR THIS DOCUMENT

Figure 60 WIRING SIDE OF P. W. BOARD

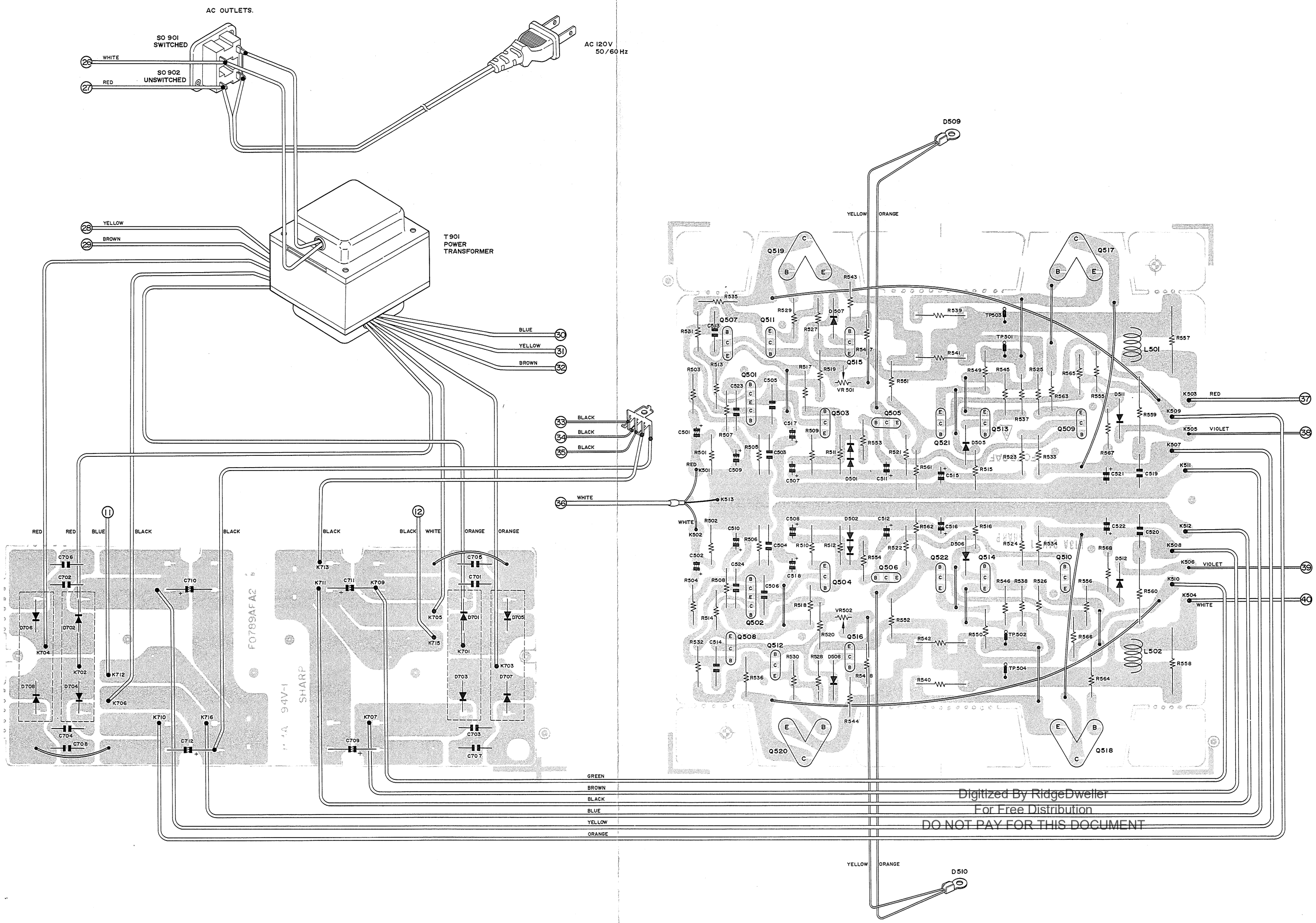

Figure 61 WIRING SIDE OF MAIN AMPLIFIER CIRCUIT BOARD

Digitized By RidgeDweller
For Free Distribution
DO NOT PAY FOR THIS DOCUMENT

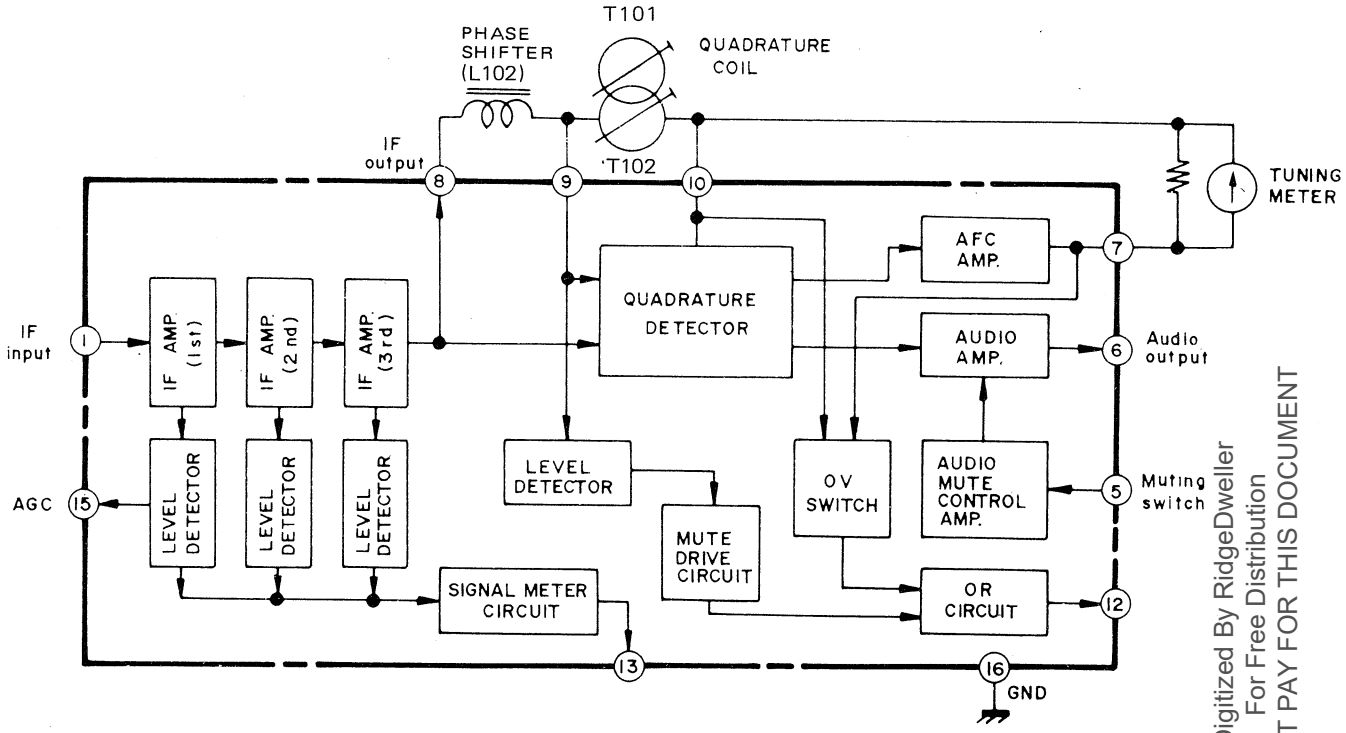

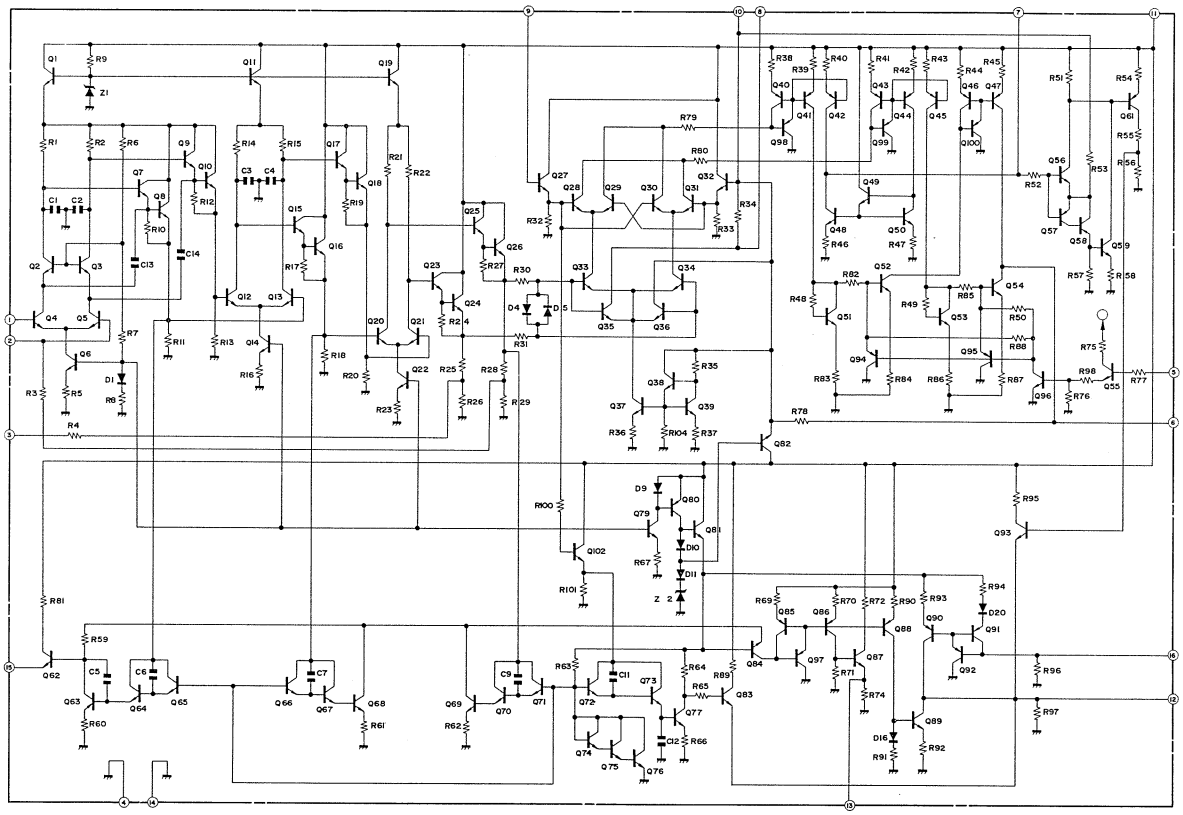

Digitized By RidgeDweller
For Free Distribution
DO NOT PAY FOR THIS DOCUMENT

Figure 62 EQUIVALENT CIRCUIT OF INTEGRATED CIRCUIT (IC102)

Digitized By RidgeDweller
For Free Distribution
DO NOT PAY FOR THIS DOCUMENT

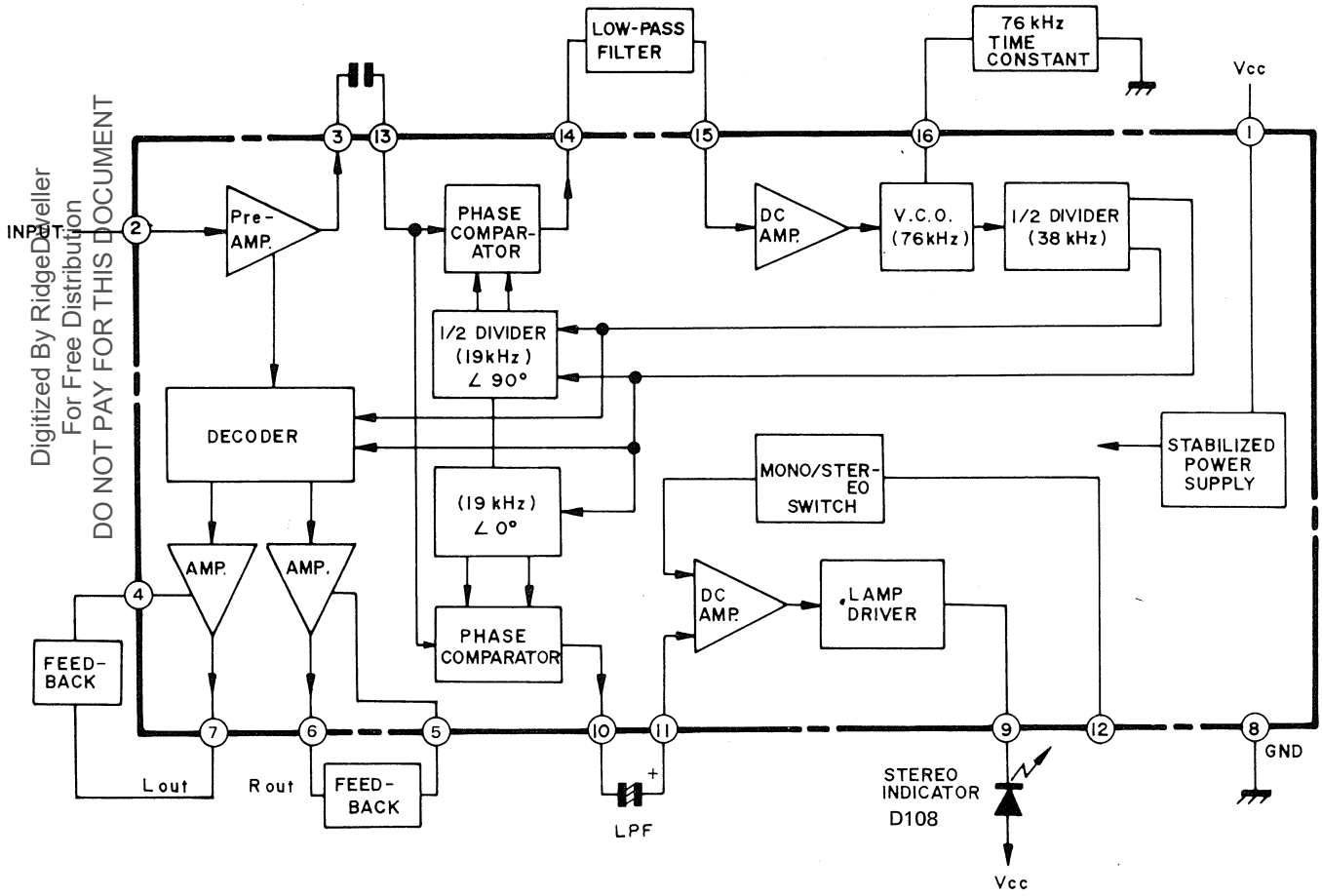

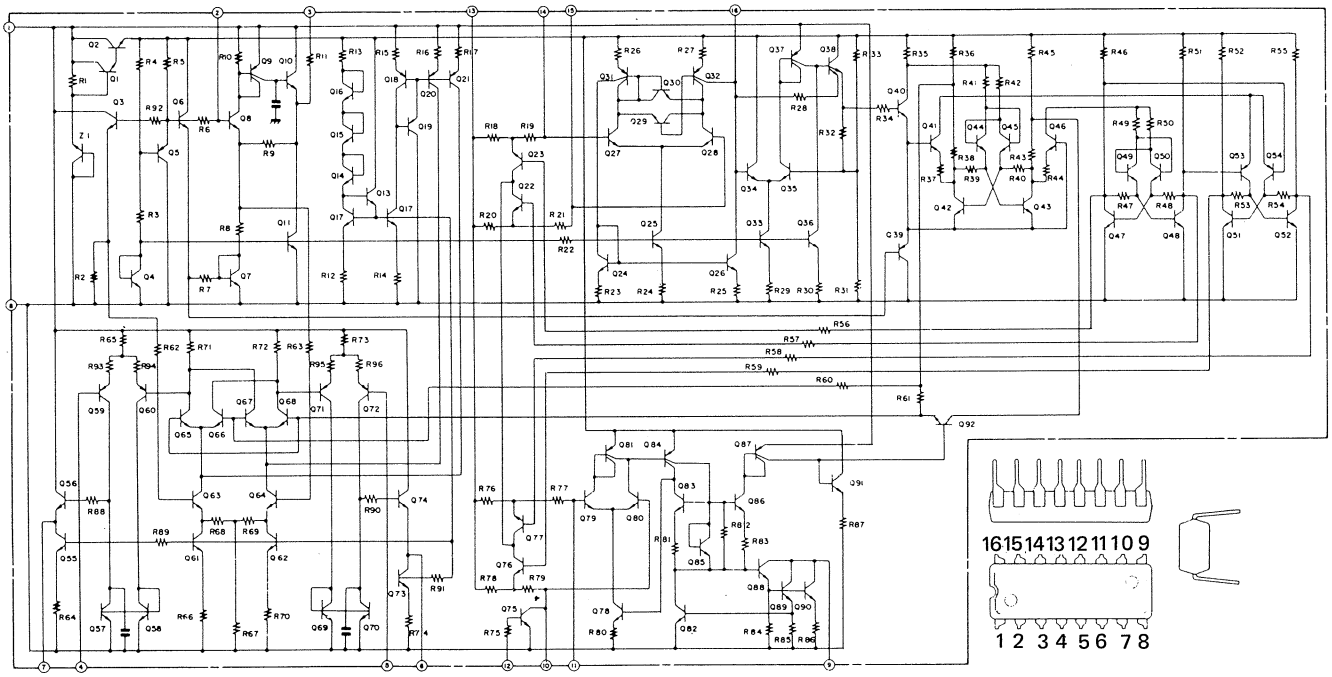

Figure 63 EQUIVALENT CIRCUIT OF INTEGRATED CIRCUIT (IC103)

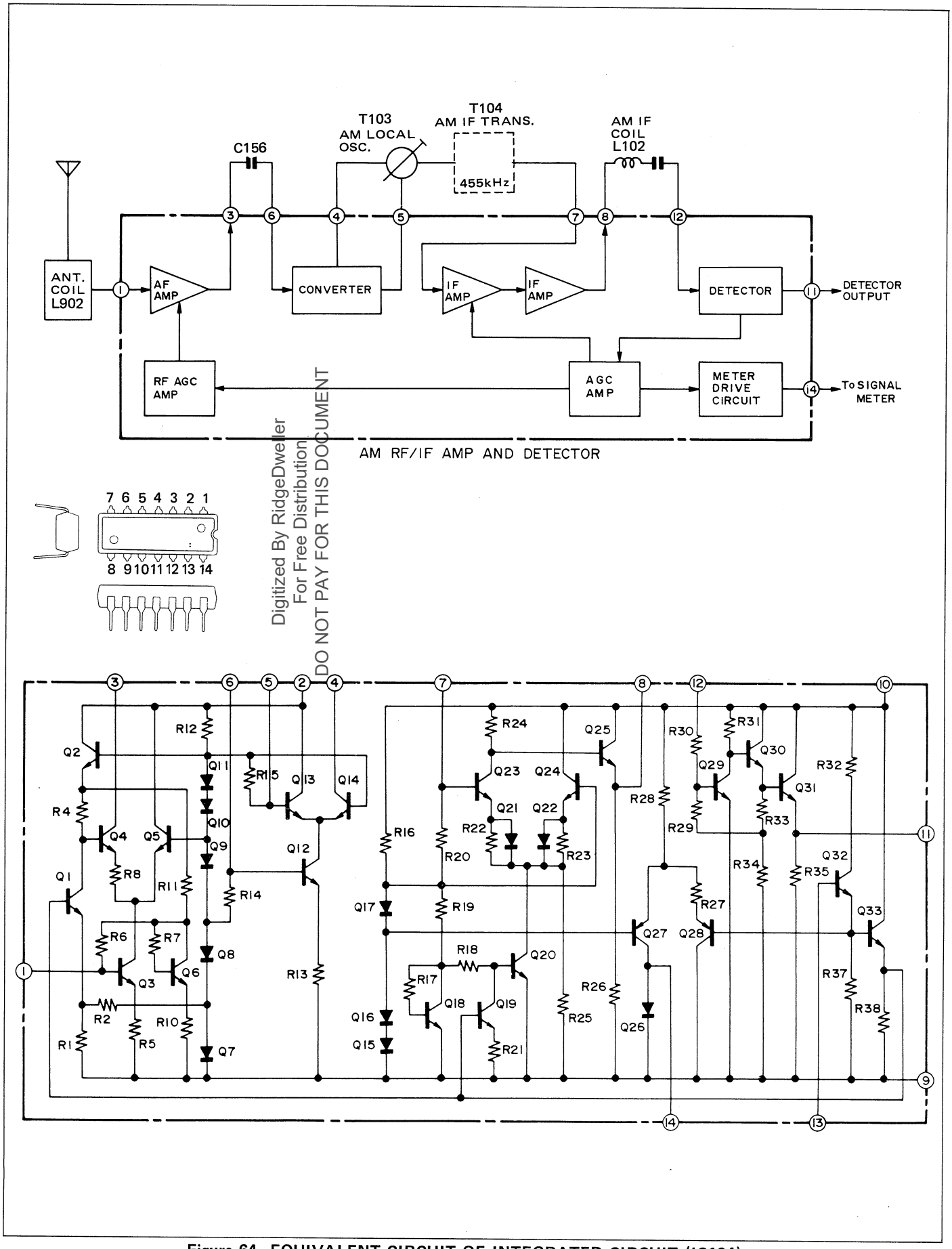

Digitized By RidgeDweller
For Free Distribution
DO NOT PAY FOR THIS DOCUMENT

Figure 64 EQUIVALENT CIRCUIT OF INTEGRATED CIRCUIT (IC104)

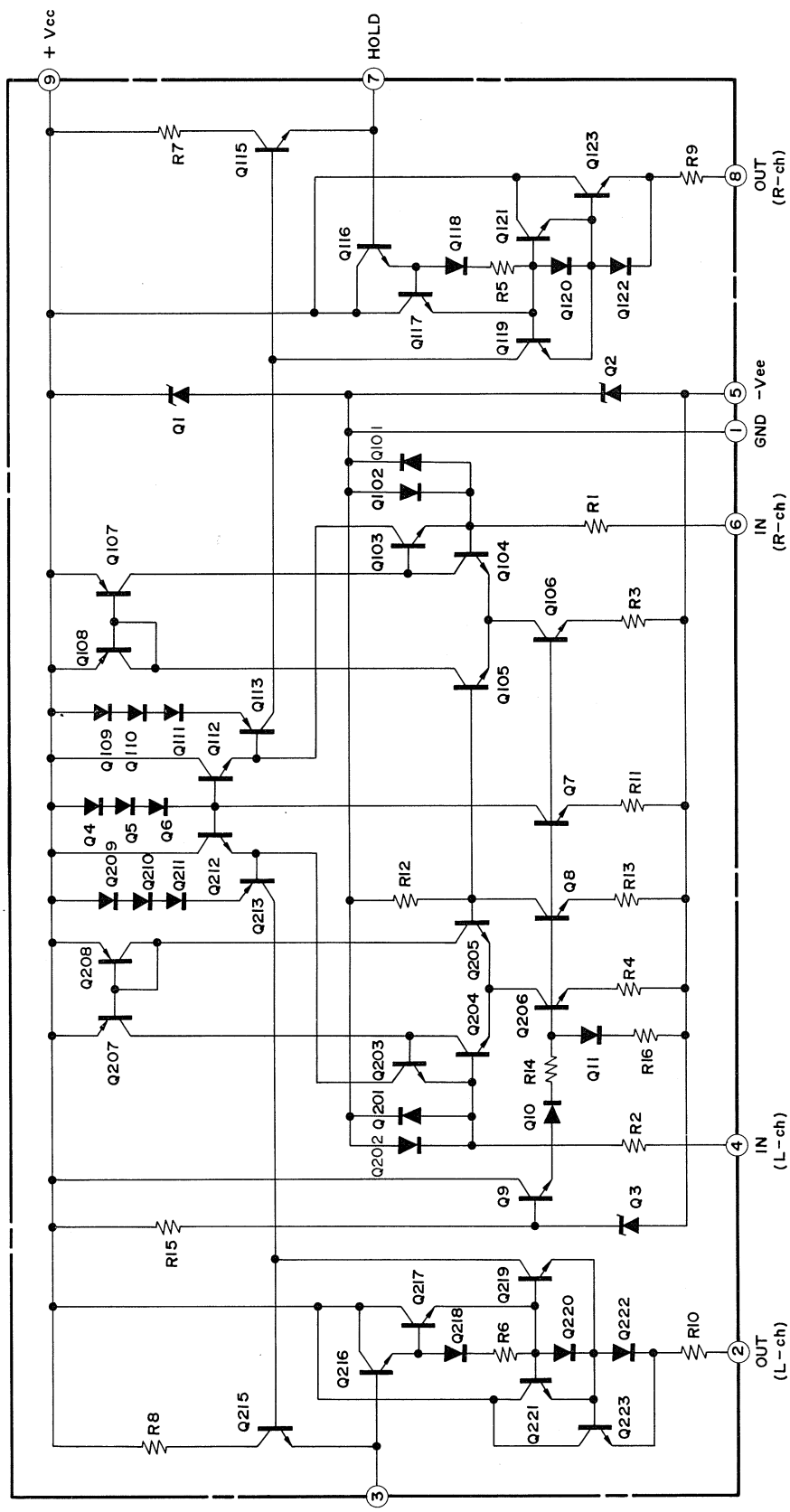

Digitized By RidgeDweller
For Free Distribution
DO NOT PAY FOR THIS DOCUMENT

VHITA7318PI-I

Figure 65 EQUIVALENT CIRCUIT OF INTEGRATED CIRCUIT (IC601)

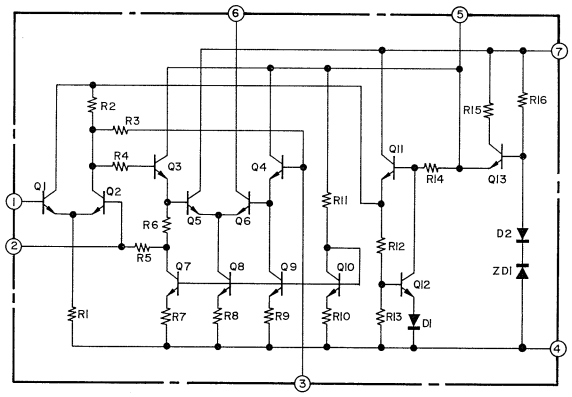

Digitized By RidgeDweller
For Free Distribution
DO NOT PAY FOR THIS DOCUMENT

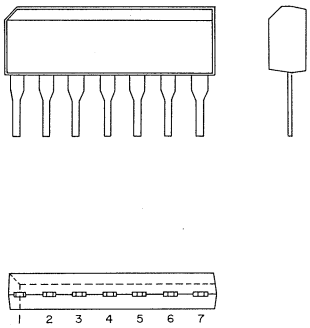

Figure 66 EQUIVALENT CIRCUIT OF INTEGRATED CIRCUIT (IC101)

VHIHA12002/-1

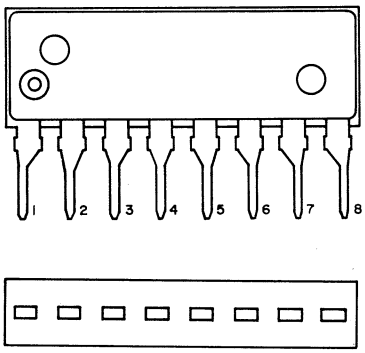

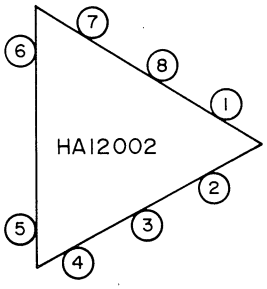

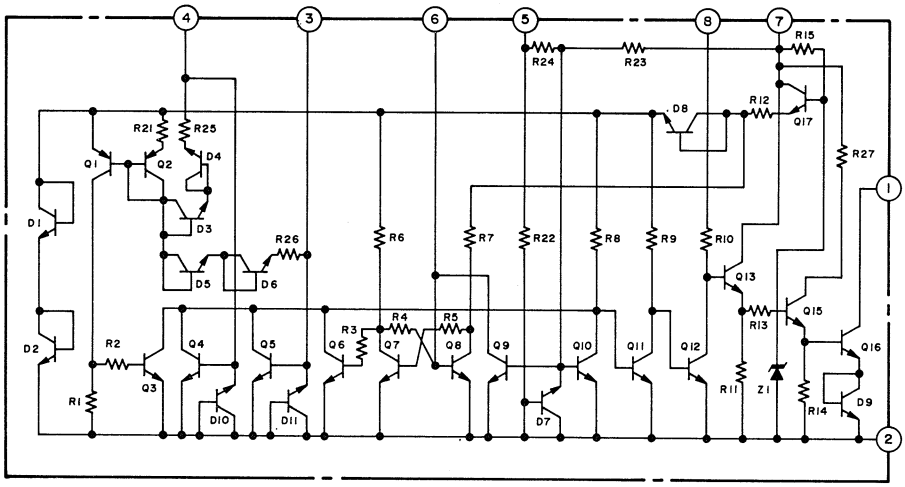

Figure 67 EQUIVALENT CIRCUIT OF INTEGRATED CIRCUIT (IC602)

REPLACEMENT PARTS LIST

"HOW TO ORDER REPLACEMENT PARTS"

To have your order filled promptly and correctly, please furnish the following informations.
1. MODEL NUMBER 2. REF. NO.
3. PART NO. 4. DESCRIPTION

Order to : Parts Center
P.O. Box 664 Paramus, New Jersey 07652 (201) 262-9000
P.O. Box 20394 Long Beach, Calif. 90801 (213) 830-4470

Digitized By RidgeDweller
For Free Distribution
DO NOT PAY FOR THIS DOCUMENT

INTEGRATED CIRCUITS

REF. NO.	PART NO.	DESCRIPTION	CODE
IC101	TA7302P	FM IF Amplifier (VHITA7302P/-1)	AG
IC102	HA11225	FM Detector (Quadrature) (VHIHA11225/-1)	AP
IC103	HA1196	P.L.L Multiplex Stereo Demodulator (RH-IX1053AFZZ)	AP
IC104	HA1151	AM RF/IF Amplifier and Demodulator (RH-IX1032AEZZ)	AK
IC601	TA7318P	Power Meter Amplifier (VHITA7318P2-1)	AK
IC602	HA12002	Protector Circuit (VHIHA12002/-1)	AK

TRANSISTERS

REF. NO.	PART NO.	DESCRIPTION	CODE
Q101	2SC458C	FM AGC (VS2SC458-C/-1)	AC
Q102	2SC460B	FM IF Amplifier (VS2SC460-B/-1)	AC
Q201, Q202	2SC458D	FM Opto Lock (VS2SC458-D/-1)	AC
Q203, Q204, Q205, Q206, Q207	2SC458C	FM Opto Lock (VS2SC458-C/-1)	AC
Q208	2SC458C	Air Check Oscillation (VS2SC458-C/-1)	AC
Q209, Q210	2SC458D	FM Muting (VS2SC458-D/-1)	AC
Q301, Q302	2SK117BL	Equalizer Amplifier (VS2SK117-BL-1)	AE
Q303, Q304, Q305, Q306	2SA872E	Equalizer Amplifier (VS2SA872-E/-1)	AE
Q307, Q308	2SC1775E	Buffer Amplifier (VS2SC1775E/-1)	AD
Q401, Q402	2SC1775E	Tone Amplifier (VS2SC1775E/-1)	AD
Q403, Q404	2SA872E	Tone Amplifier (VS2SA872-E/-1)	AE
Q405, Q406	2SC1775E	Tone Amplifier (VS2SC1775E/-1)	AD
Q407, Q408	2SA872E	Tone Amplifier (VS2SA872-E/-1)	AE
Q501, Q502	2SA798G	Power Amplifier (VS2SA798-G/-1)	AF
Q503, Q504	2SB646C	Power Amplifier (VS2SB646-C/-1)	AE
Q505, Q506	2SB648AB	Power Amplifier (VS2SB648A-B-1)	AE
Q507, Q508	2SD668AB	Power Amplifier (VS2SD668A-B-1)	AG
Q509, Q510	2SD669AB	Power Amplifier (VS2SD669A-B-1)	AH
Q511, Q512	2SB649AB	Power Amplifier (VS2SB649A-B-1)	AH
Q513, Q514	2SC1213AB	Power Amplifier (VS2SC1213AB-1)	AD
Q515, Q516	2SA673AB	Power Amplifier (VS2SA673AB/-1)	AE
Q517, Q518	2SD675AB	Power Amplifier (VS2SD675AB/-1)	AP
Q519, Q520	2SB655AB	Power Amplifier (VS2SB655AB/-1)	AQ
Q521, Q522	2SB646C	Power Amplifier (VS2SB646-C/-1)	AE
Q601	2SC1166Y	Ripple Filter, Voltage Regulator (VS2SC1166-Y-1)	AE
Q602	2SA661Y	Ripple Filter, Voltage Regulator (VS2SA661-Y/-1)	AE
Q603	2SC1061B	Ripple Filter, Voltage Regulator (VS2SC1061-B/-1)	AG
Q604, Q605	2SC458D	Relay Circuit Schimide Trigger (VS2SC458-D/-1)	AC

DIODES

REF. NO.	PART NO.	DESCRIPTION	CODE
D101	1S2473	FM AGC Circuit (VHD1S2473//-1)	AB
D102, D103	1N60	FM AGC Circuit (VHD1N60////-1)	AB
D104	HV-46G	FM IF Circuit (VHVHV46-G//-1)	AC
D105, D106, D107	1S2473	FM IF Circuit (VHD1S2473//-1)	AB
D108	GL3AR1	Light Emitting Diode, FM Stereo Indicator (VHPGL3AR1//-1)	AD
D109	1S2473	FM IF Circuit (VHD1S2473//-1)	AB
D110	1S2473	P.L.L Multiplex Stereo Demodulator (VHD1S2473//-1)	AB
D111	1S2473	Switching (VHD1S2473//-1)	AB
D201	1N60PP	FM Opto Lock Circuit (VHD1N60-PP/1G)	AB
D202	1N60	FM Opto Lock Circuit (VHD1N60////-1)	AB
D203	1S2473	FM Opto Lock Circuit (VHD1S2473//-1)	AB
D204	1N60PP	FM Opto Lock Circuit (VHD1N60-PP/1G)	AB
D205, D206	1S2473	FM Opto Lock Circuit (VHD1S2473//-1)	AB
D207	GL3AR1	Light Emitting Diode, FM Opto Lock Indicator (VHPGL3AR1//-1)	AD

PARTS LIST

REF. NO.	PART NO.	DESCRIPTION	CODE
D501, D502	HV-46G	Varistor, Power Amplifier (VHVHV46-G//-1)	AC
D505, D506, D507, D508	1S2473	Power Amplifier Circuit (VHD1S2473//-1)	AB
D509, D510	MV203Y	Varistor, Power Amplifier (VHVMV203Y//-1)	AD
D511, D512	1S2473	Protection Circuit (VHD1S2473//-1)	AB
D601, D602, D603, D604	10E1	Power Rectifier (VHD10E1////-1)	AC
D605	1S2473	Power Rectifier (VHD1S2473//-1)	AB
D606	1S2473	Voltage Regulator (VHD1S2473//-1)	AB
D607, D608	10E1	Voltage Regulator (VHD10E1////-1)	AC
D611, D613	1S2473	Protection Circuit (VHD1S2473//-1)	AB
D614	GL-52RG	Light Emitting Diode, Protection Indicator (VHPGL-52RG/1F)	AK
D701, D702, D703, D704	30DC2	Power Rectifier (VHD30DC2///-F)	AG
D705, D706, D707, D708	30DC2R	Power Rectifier (VHD30DC2R//-F)	AG
ZD601, ZD602, ZD603, ZD604	RD15ED	Zener Diode, Voltage Regulator (VHERD15ED//1F)	AD
ZD605	HZ12B3	Zener Diode, Voltage Regulator (VHEHZ12B3//-1)	AB

Digitized By RidgeDweller
For Free Distribution
DO NOT PAY FOR THIS DOCUMENT

THERMISTORS

REF. NO.	PART NO.	DESCRIPTION	CODE
TH901, TH902	MV203Y	Positive Coefficient Thermistor (RH-QX1002AFZZ)	AG

COILS

REF. NO.	PART NO.	DESCRIPTION	CODE
L101	VP-LH100M0000	10μH, Choke	AB
L102	RCILZ0064AFZZ	21μH, Phase Shifter	AC
L103	RCILI0219AFZZ	AM IF	AH
L501, L502	RCILZ0050AFZZ	.8μH, Oscillation Prevention	AD
L601, L602, L603	VP-LH100M0000	10μH, Choke	AB
L901	RCILA0231AFZZ	Balun (Antenna Matching)	AD
L902	RCILA0429AFZZ	AM Bar Antenna	AN

TRANSFORMERS

REF. NO.	PART NO.	DESCRIPTION	CODE
T101	RCILD0062AFZZ	FM IF, Quadrature	AD
T102	RCILD0063AFZZ	FM IF, Quadrature	AD
T103	RCILB0395AFZZ	AM Local Oscilation	AD
T104	RCILI0219AFZZ	AM IF with Ceramic Filter	AE
T901	RTRNP0577AFZZ	Power	BQ

FILTERS

REF. NO.	PART NO.	DESCRIPTION	CODE
CF101, CF102, CF103, CF104	RFILF0059AFZZ	FM IF, Ceramic	AG
LPF101, LPF102	RFILL0051AFZZ	Low Pass Filter	AH

CONTROLS

REF. NO.	PART NO.	DESCRIPTION	CODE
VR101	RVR-M0065AGZZ	4.7K ohm (B), FM Muting Adjust	AF
VR102	RVR-M0078AGZZ	10K ohm (B), V.C.O. Frequency Adjust	AG
VR103	RVR-M0145AFZZ	220K ohm (B), Stereo Separation Adjust	AD
VR201	RVR-M0084AGZZ	100K ohm (B), FM Opto Lock Adjust	AG
VR202	RVR-M0024AGZZ	100K ohm (B), Air Check Adjust	AE
VR401-A, B	RVR-G0051AFZZ	100K ohm (Z), Balance Control	AH
VR402-A, B	RVR-B0159AFZZ	100K ohm (B), Volume Control	AN
VR403-A, B	RVR-B0117AFZZ	100K ohm (B), Bass Control	AK
VR404-A, B	RVR-B0117AFZZ	100K ohm (B), Mid Control	AK
VR405-A, B	RVR-B0117AFZZ	100K ohm (B), Treble Control	AK
VR501, VR502	RVR-M0071AGZZ	330 ohm (B), Idle Current Control	AG
VR601, VR602	RVR-M0122AFZZ	500 ohm (B), Power Meter Adjust	AC

RESISTERS

(Unless otherwise specified resisters are 1/4W, ±5%, Carbon type,)

REF. NO.	PART NO.	DESCRIPTION	CODE
R101	VRD-ST2EE101J	100 ohm	AA
R102	VRD-ST2EE333J	33K ohm	AA
R103	VRD-ST2EE330J	33 ohm	AA
R104	VRD-ST2EE101J	100 ohm	AA
R105	VRD-ST2EE683J	68K ohm	AA
R106	VRD-ST2EE102J	1K ohm	AA
R107	VRD-ST2EE221J	220 ohm	AA
R108	VRD-ST2EE101J	100 ohm	AA
R109	VRD-ST2EE104J	100K ohm	AA
R110	VRD-ST2EE154J	150K ohm	AA
R111	VRD-ST2EE330J	33 ohm	AA
R112	VRD-ST2EE224J	220K ohm	AA
R113	VRD-ST2EE331J	330 ohm	AA
R114	VRD-ST2EE472J	4.7K ohm	AA
R115	VRD-ST2EE104J	100K ohm	AA
R116	VRD-ST2EE330J	33 ohm	AA
R117	VRD-ST2EE471J	470 ohm	AA
R118	VRD-ST2EE822J	8.2K ohm	AA
R119	VRD-ST2EE153J	15K ohm	AA

PARTS LIST

REF. NO.	PART NO.	DESCRIPTION	CODE
R120	VRD-ST2EE222J	2.2K ohm	
R121	VRD-ST2EE333J	33K ohm	
R122	VRD-ST2EE822J	8.2K ohm	
R123	VRD-ST2EE154J	150K ohm	
R124	VRD-ST2EE473J	47K ohm	
R125	VRD-ST2EE153J	15K ohm	
R126	VRD-ST2EE271J	270 ohm	
R127	VRD-ST2EE123J	12K ohm	
R128	VRD-ST2EE271J	270 ohm	
R129, R130	VRD-ST2EE560J	56 ohm	
R131	VRD-ST2EE102J	1K ohm	
R132	VRD-ST2EE333J	33K ohm	
R133	VRD-ST2EE563J	56K ohm	
R134	VRD-ST2EE183J	18K ohm	
R135	VRD-ST2EE333J	33K ohm	
R136	VRD-ST2EE224J	220K ohm	
R137	VRD-ST2EE333J	33K ohm	
R138	VRD-ST2EE223J	22K ohm	
R139	VRD-ST2EE101J	100 ohm	
R140	VRD-ST2EE102J	1K ohm	
R141	VRD-ST2EE223J	22K ohm	
R142	VRD-ST2EE563J	56K ohm	
R143	VRD-ST2HD561J	560 ohm, 1/2W, ±5%, Carbon	
R144, R145	VRD-ST2EE682J	6.8K ohm	
R146, R147	VRD-ST2EE473J	47K ohm	
R148, R149	VRD-ST2EE332J	3.3K ohm	
R150	VRD-ST2EE223J	22K ohm	
R151, R152	VRD-ST2EE392J	3.9K ohm	
R153	VRD-ST2EE333J	33K ohm	
R154	VRD-ST2EE271J	270 ohm	AA
R157	VRD-ST2EE105J	1Meg ohm	
R158, R159	VRD-ST2EE100J	10 ohm	
R160	VRD-ST2EE103J	10K ohm	
R170	VRD-ST2EE103J	10K ohm	
R171	VRD-ST2EE153J	15K ohm	
R172	VRD-ST2EE101J	100 ohm	
R173	VRD-ST2EE562J	5.6K ohm	
R174	VRD-ST2EE101J	100 ohm	
R175	VRD-ST2EE821J	820 ohm	
R177	VRD-ST2EE562J	5.6K ohm	
R178	VRD-ST2EE223J	22K ohm	
R179	VRD-ST2EE101J	100 ohm	
R180	VRD-ST2EE332J	3.3K ohm	
R181	VRD-ST2EE560J	56 ohm	
R182	VRD-ST2EE821J	820 ohm	
R183	VRD-ST2EE335J	3.3Meg ohm	
R201	VRD-ST2EE224J	220K ohm	
R202	VRD-ST2EE335J	3.3Meg ohm	
R204	VRD-ST2EE103J	10K ohm	
R205	VRD-ST2EE684J	680K ohm	
R206	VRD-ST2EE104J	100K ohm	
R207	VRD-ST2EE103J	10K ohm	
R208	VRD-ST2EE182J	1.8K ohm	
R209	VRD-ST2EE393J	39K ohm	
R210	VRD-ST2EE273J	27K ohm	
R212	VRD-ST2EE122J	1.2K ohm	
R213	VRD-ST2EE103J	10K ohm	
R214	VRD-ST2EE102J	1K ohm	
R215	VRD-ST2EE104J	100K ohm	

Digitized By RidgeDweller
For Free Distribution
DO NOT PAY FOR THIS DOCUMENT

REF. NO.	PART NO.	DESCRIPTION	CODE
R216	VRD-ST2EE823J	82K ohm	
R217	VRD-ST2EE102J	1K ohm	
R218	VRD-ST2EE333J	33K ohm	
R219	VRD-ST2EE272J	2.7K ohm	
R220	VRD-ST2EE563J	56K ohm	
R221	VRD-ST2EE154J	150K ohm	
R222, R223	VRD-ST2EE272J	2.7K ohm	
R224	VRD-ST2EE823J	82K ohm	
R225	VRD-ST2EE334J	330K ohm	
R226	VRD-ST2EE104J	100K ohm	
R227	VRD-ST2EE823J	82K ohm	
R228	VRD-ST2EE224J	220K ohm	
R229	VRD-ST2HD821J	820 ohm, 1/2W, ±5%, Carbon	
R231	VRD-ST2EE101J	100 ohm	
R232	VRD-ST2EE103J	10K ohm	
R233	VRD-ST2EE181J	180 ohm	
R234	VRD-ST2EE392J	3.9K ohm	
R235	VRD-ST2EE823J	82K ohm	
R236	VRD-ST2EE223J	22K ohm	
R237, R238	VRD-ST2EE103J	10K ohm	
R239	VRD-ST2EE223J	22K ohm	
R241	VRD-ST2EE273J	27K ohm	AA
R301, R302	VRD-ST2EE102J	1K ohm	
R303, R304	VRD-ST2EE105J	1Meg ohm	
R305, R306, R307, R308	VRD-ST2EE102J	1K ohm	
R309, R310	VRD-ST2EE105J	1Meg ohm	
R311, R312	VRD-ST2EE102J	1K ohm	
R313, R314	VRD-ST2EE474J	470K ohm	
R315, R316	VRD-ST2EE273J	27K ohm	
R317, R318	VRD-ST2EE104J	100K ohm	
R319, R320	VRD-ST2EE221J	220 ohm	
R321, R322	VRD-ST2EE473J	47K ohm	
R323, R324	VRN-KU2HB154F	150K ohm, 1/2W, ±1%, Oxide Film	**
R325, R326	VRD-ST2EE153J	15K ohm	
R327, R328	VRD-ST2EE682J	6.8K ohm	
R329, R330	VRD-ST2EE154J	150K ohm	
R331, R332	VRD-ST2EE562J	5.6K ohm	
R333, R334	VRD-ST2EE102J	1K ohm	AA
R335, R336	VRD-ST2EE124J	120K ohm	
R337, R338	VRD-ST2EE334J	330K ohm	
R339, R340	VRD-ST2EE122J	1.2K ohm	
R341, R342	VRN-KU2HB564F	560K ohm, 1/2W, ±1%, Oxide Film	**

PARTS LIST

REF. NO.	PART NO.	DESCRIPTION	CODE
R343, R344	VRN-KU2EB473F	47K ohm, 1/4W, ±1%, Oxide Film	**
R345, R346	VRD-ST2EE124J	120K ohm	AA
R347, R348	VRD-ST2EE561J	560 ohm	AA
R349, R350	VRD-ST2EE224J	220K ohm	AA
R351, R352	VRD-ST2EE474J	470K ohm	AA
R353, R354	VRD-ST2EE102J	1K ohm	AA
R355, R356	VRG-ST2EA101J	100 ohm, 1/4W, ±5% , Fusible	AB
R401, R402	VRD-ST2EE682J	6.8K ohm	AA
R403, R404	VRD-SU2EE563J	56K ohm	AA
R405, R406	VRD-ST2EE333J	33K ohm	AA
R407, R408	VRD-ST2EE103J	10K ohm	AA
R409, R410	VRD-SU2EE471J	470 ohm	AA
R411, R412	VRD-SU2EE474J	470K ohm	AA
R413, R414	VRD-ST2EE105J	1Meg ohm	AA
R415	VRD-ST2EE104J	100K ohm	AA
R417	VRD-ST2EE103J	10K ohm	AA
R419, R420	VRD-ST2EE273J	27K ohm	AA
R421, R422	VRD-SU2EE102J	1K ohm	AA
R423, R424	VRD-ST2EE682J	6.8K ohm	AA
R425, R426	VRD-ST2EE102J	1K ohm	AA
R427, R428, R429, R430	VRD-ST2EE153J	15K ohm	AA
R433, R434	VRD-ST2EE273J	27K ohm	AA
R435, R436, R437, R438	VRD-ST2EE562J	5.6K ohm	AA
R439, R440	VRD-ST2EE123J	12K ohm	AA
R441, R442	VRD-ST2EE332J	3.3K ohm	AA
R443, R444	VRD-ST2EE562J	5.6K ohm	AA
R447, R448	VRD-ST2EE225J	2.2Meg ohm	AA
R449, R450	VRD-ST2EE683J	68K ohm	AA
R451	VRD-SU2EE103J	10K ohm	AA
R452	VRD-ST2EE103J	10K ohm	AA
R453	VRD-ST2EE473J	47K ohm	AA
R454	VRD-SU2EE473J	47K ohm	AA
R455, R456	VRD-SU2EE221J	220 ohm	AA
R457, R458	VRD-SU2EE273J	27K ohm	AA
R461, R462	VRD-ST2EE333J	33K ohm	AA
R463, R464	VRD-ST2EE472J	4.7K ohm	AA
R465, R466	VRD-ST2EE105J	1Meg ohm	AA
R467, R468	VRD-ST2EE334J	330K ohm	AA
R469, R470	VRD-ST2EE823J	82K ohm	AA
R501, R502	VRD-ST2EE564J	560K ohm	AA
R503, R504	VRD-ST2EE821J	820 ohm	AA
R505, R506	VRD-ST2EE223J	22K ohm	AA
R507, R508	VRD-ST2EE681J	680 ohm	AA
R509, R510	VRD-ST2EE331J	330 ohm	AA
R511, R512	VRD-ST2EE392J	3.9K ohm	AA
R513, R514	VRD-ST2EE681J	680 ohm	AA
R515, R516	VRD-ST2EE152J	1.5K ohm	AA
R517, R518	VRD-ST2EE563J	56K ohm	AA
R519, R520	VRD-ST2EE223J	22K ohm	AA
R521, R522	VRD-ST2EE680J	68 ohm	AA
R523, R524, R525, R526, R527, R528	VRG-ST2EA101J	100 ohm, 1/4W, ±5%, Fusible	AB
R529, R530	VRG-ST2EA4R7J	4.7 ohm, 1/4W, ±5%, Fusible	AB
R531, R532	VRG-ST2EA101J	100 ohm, 1/4W, ±5%, Fusible	AB
R533, R534, R535, R536	VRG-ST2EA4R7J	4.7 ohm, 1/4W, ±5%, Fusible	AB
R537, R538	VRG-ST2EA271J	270 ohm, 1/4W, ±5%, Fusible	AB
R539, R540, R541, R542	RR-WZ1001AFZZ	.33 ohm, 5W, Cement	AD
R543, R544	VRG-ST2EA271J	270 ohm, 1/4W, ±5%, Fusible	AB
R545, R546, R547, R548	VRG-ST2EA101J	100 ohm, 1/4W, ±5%, Fusible	AB
R549, R550, R551, R552	VRD-ST2EE122J	1.2K ohm	AA
R553, R554	VRD-ST2EE472J	4.7K ohm	AA
R555, R556	VRD-ST2EE392J	3.9K ohm	AA

Digitized By RidgeDweller
For Free Distribution
DO NOT PAY FOR THIS DOCUMENT

PARTS LIST

REF. NO.	PART NO.	DESCRIPTION	CODE
R557, R558	VRS-PT3DB2R2K	2.2 ohm, 2W, ±10%, Metal Oxide Film	**
R559, R560	VRS-PT3DB100K	10 ohm, 2W, ±10%, Metal Oxide Film	**
R561, R562	VRD-ST2EE152J	1.5K ohm	AA
R563, R564	VRG-ST2EA4R7J	4.7 ohm, 1/4W, ±5%, Fusible	AB
R565, R566	VRD-ST2EE123J	12K ohm	AA
R567, R568	VRD-ST2EE223J	22K ohm	AA
R601, R602	VRG-ST2HA1R0J	1 ohm, 1/2W, ±5%, Fusible	AB
R603	VRD-ST2EE392J	3.9K ohm	
R604	VRD-ST2HD122J	1.2K ohm, 1/2W, ±5%, Carbon	AA
R605, R606	VRG-ST2EA4R7J	4.7 ohm, 1/4W, ±5%, Fusible	AB
R607, R608	VRD-ST2EE331J	330 ohm	
R610	VRD-ST2EE332J	3.3K ohm	AA
R611	VRD-ST2EE151J	150 ohm	
R612	VRD-ST2EE562J	5.6K ohm	
R613	VRG-ST2HA1R0J	1 ohm, 1/2W, ±5%, Fusible	AB
R614	VRD-ST2EE333J	33K ohm	
R615	VRD-ST2EE473J	47K ohm	AA
R616	VRG-ST2HA100J	10 ohm, 1/2W, ±5%, Fusible	AB
R617	VRD-ST2EE821J	820 ohm	AA
R618	VRS-PT3AB151K	150 ohm, 1W, ±10%, Metal Oxide Film	**
R619	VRD-ST2EE223J	22K ohm	
R620	VRD-ST2EE122J	1.2K ohm	
R621	VRD-ST2EE104J	100K ohm	
R622	VRD-ST2EE183J	18K ohm	AA
R623	VRD-ST2EE822J	8.2K ohm	
R624	VRD-ST2EE104J	100K ohm	
R625, R626	VRD-ST2EE823J	82K ohm	
R627	VRS-PT3AB222K	2.2K ohm, 1W, ±10%, Metal Oxide Film	**
R628	VRS-PT3DB681K	680 ohm, 2W, ±10%, Metal Oxide Film	**
R630	VRD-ST2EE221J	220 ohm	
R631	VRD-ST2EE121J	120 ohm	
R632, R633	VRD-ST2EE223J	22K ohm	AA
R635	VRD-ST2EE221J	220 ohm	
R636, R637	VRS-PT3LB271J	270 ohm, 3W, ±5%, Metal Oxide Film	**
R638	VRD-ST2EE273J	27K ohm	
R639, R640	VRD-ST2EE472J	4.7K ohm	
R641	VRD-ST2EE273J	27K ohm	
R642, R643	VRD-ST2HD152J	1.5K ohm, 1/2W, ±5%, Carbon	AA
R644	VRD-ST2HD122J	1.2K ohm, 1/2W, ±5%, Carbon	
R645	VRD-ST2HD272J	2.7K ohm, 1/2W, ±5%, Carbon	
R646	VRD-ST2HD475J	4.7Meg ohm, 1/2W, ±5%, Carbon	
R647	VRG-ST2HA1R0J	1 ohm, 1/2W, ±5%, Fusible	AB
R649	VRG-ST2EA101J	100 ohm, 1/4W, ±5%, Fusible	AB

CAPACITORS

(Unless otherwise specified capacitors are 50V, +80 −20%, Ceramic type.)

REF. NO.	PART NO.	DESCRIPTION	CODE
C101	VCKZPU1HF102Z	.001MFD	AA
C102, C103, C104, C105, C106	VCKZPU1HF223Z	.022MFD	AA
C108	VCCSAT1HL330J	33PF, 50V, ±5%, Ceramic	**
C109, C110, C111, C112	VCKZPU1HF223Z	.022MFD	AA
C113	VCKZPU1HF403Z	.04MFD	AA
C114	VCKZPU1HF223Z	.022MFD	AA
C115	VCKZPU1HF403Z	.04MFD	AA
C116, C118	VCKZPU1HF223Z	.022MFD	AA
C119	VCKYAT1HB391J	390PF, 50V, ±5%, Ceramic	**
C120, C122	VCKZPU1HF223Z	.022MFD	AA
C125	VCKYAT1HB331J	330PF, 50V, ±5%, Ceramic	**
C129	VCQSMU1HS391J	390PF, 50V, ±5%, Polystyrene	AB
C131	VCQYSH1HM473J	.047MFD, 50V, ±5%, Mylar	AB
C136, C137	VCQYSH1HM182M	.0018MFD, 50V, ±20%, Mylar	AB
C140	VCQYSH1HM103J	.01MFD, 50V, ±5%, Mylar	AC
C141	VCKZPU1HF403Z	.04MFD	AA
C142	VCKZPU1HF102Z	.001MFD	AA
C143	VCCUPU1HJ180J	18PF, 50V, ±5%, Ceramic	**
C144	VCQSMU1HS331J	330PF, 50V, ±5%, Polystyrene	AC
C145, C146	VCKZPU1HF103Z VCCSPU1HL221J	.01MFD 220PF, 50V, ±5%, Ceramic	 **
C150	VCKZPU1HF103Z	.01MFD	
C152, C154, C156, C157	VCKZPU1HF403Z	.04MFD	
C158	VCQYSH1HM102J	.001MFD, 50V, ±5%, Mylar	AB
C162	VCKYAT1HB331J	330PF, 50V, ±5%, Ceramic	**
C163	VCCSAT1HL470J	47PF, 50V, ±5%, Ceramic	AA
C165	VCKZPU1HF223Z	.022MFD	AA
C151	VCKZPU1HF223Z	.022MFD	**
C211, C212, C213, C214	VCQYSH1HM223J	.022MFD, 50V, ±5%, Mylar	AC
C306, C307	VCCSAT1HL101J	100PF, 50V, ±5%, Ceramic	**
C308, C309	VCKPZU1HF102Z	.001MFD	AA
C310, C311	VCCSAT1HL3R3C	3.3PF, 50V, ±0.25PF, Ceramic	**
C318, C319	VCQYSH1HM473J	.047MFD, 50V, ±5%, Mylar	AB
C324, C325	VCCSPU1HL181K	180PF, 50V, ±10%, Ceramic	**
C326, C327	VCQSMA1HL162G	.0016MFD, 50V, ±2%, Polystyrene	AC
C329, C330	VCQSMA1HL562G	.0056MFD, 50V, ±2%, Polystyrene	AD
C333, C334	VCKZPU1HF223Z	.022MFD	AA
C336, C337	VCCSPU1HL5R0C	5PF, 50V, ±0.25PF, Ceramic	**
C401, C402	VCCSPU1HL271K	270PF, 50V, ±10%, Ceramic	**
C403, C404	VCQYSH1HM563J	.056MFD, 50V, ±5%, Mylar	AC

Digitized By RidgeDweller
For Free Distribution
DO NOT PAY FOR THIS DOCUMENT

PARTS LIST

REF. NO.	PART NO.	DESCRIPTION	CODE
C411, C412, C413, C414	VCQYSH1HM273J	.027MFD, 50V, ±5%, Mylar	AB
C415, C416, C417, C418	VCQYSH1HM562J	.0056MFD, 50V, ±5%, Mylar	AB
C419, C420	VCCSPU1HL680K	68PF, 50V, ±10%, Ceramic	**
C421, C422	VCQYSH1HM152J	.0015MFD, 50V, ±5%, Mylar	AB
C431, C432	VCQYSH1HM562J	.0056MFD, 50V, ±5%, Mylar	AB
C503, C504	VCKYAT1HB331J	33PF, 50V, ±5%, Ceramic	**
C505, C506, C513, C514	VCCSAT1HL330J	33PF, 50V, ±5%, Ceramic	**
C519, C520	VCQYSH1HM104J	.1MFD, 50V, ±5%, Mylar	AC
C601, C602, C603, C604, C614	VCKZPU1HF223Z	.022MFD	AA
C626	VCKZPU1HF223Z	.022MFD	AA
C629, C630	VCQYSH1HM273J	.027MFD, 50V, ±5%, Mylar	AB
C631	RC-KZ020UAFZZ	.01MFD, 150V, AC125V, +80 –20%, Ceramic	AE
C701, C702, C703, C704, C705, C706, C707, C708, C901, C902	VCKZPU2EE103Z	.01MFD, 250V, +80 –20% Ceramic	AA
C903	VCKZPU1HF223Z	.022MFD	AA
C904	VCCSPU1HL8R0C	8PF, 50V, ±0.25PF, Ceramic	**

ELECTROLYTIC CAPACITORS

REF. NO.	PART NO.	DESCRIPTION	CODE
C107	VCEAAU1HW335Y	3.3MFD, 50V, +50 –10%	AB
C117	VCEALU1HW474M	.47MFD, 50V, ±20%	AB
C121	VCEAAU1HW105Y	1MFD, 50V, +50 –10%	AB
C124	VCEAAU1EW475Y	4.7MFD, 50V, +50 –10%	AB
C126	VCEAAU1CW106Y	10MFD, 16V, +50 –10%	AB
C127	VCEAAU1EW335Y	3.3MFD, 25V, +50 –10%	AB
C128	VCEALU1EW474M	.47MFD, 50V, ±20%	
C130	VCEAAU1CW227Y	220MFD, 16V, +50 –10%	AC
C132	VCEAAU1HW335Y	3.3MFD, 50V, +50 –10%	AB
C133	VCAAAU1EB155K	1.5MFD, 25V, ±10%, Aluminum	AC
C134, C135	VCEAAU1CW106Y	10MFD, 16V, +50 –10%	AB
C138, C139	VCEAAU1HW105Y	1MFD, 50V, +50 –10%	AB
C148, C149	VCEAAU1HW335Y	3.3MFD, 50V, +50 –10%	AB
C153	VCEAAU1CW106Y	10MFD, 16V, +50 –10%	AB
C159	VCEALU1HW104M	.1MFD, 50V, ±20%	AB
C160	VCEAAU1CW107Y	100MFD, 16V, +50 –10%	AC
C161	VCEAAU1CW476Y	47MFD, 16V, +50 –10%	AC
C164	VCEAAU1AW227Y	220MFD, 10V, +50 –10%	AC
C166	VCEALU1HW107Y	100MFD, 16V, +50 –10%	AC
C201	VCEAAU1HW105Y	1MFD, 50V, +50 –10%	AB
C202	VCEAAU1CW106Y	10MFD, 16V, +50 –10%	AB
C203	VCEAAU1EW475Y	4.7MFD, 25V, +50 –10%	AB
C204	VCEAAU1CW336Y	33MFD, 16V, +50 –10%	AC
C205	VCEAAU1HW105Y	1MFD, 50V, +50 –10%	AB
C206	VCEAAU1CW336Y	33MFD, 16V, +50 –10%	AC
C207	VCEAAU1HW105Y	1MFD, 50V, +50 –10%	AB
C208	VCEALU1HW224M	.22MFD, 50V, ±20%	AB
C216, C209, C210, C215	VCEAAU1CW106Y	10MFD, 16V, +50 –10%	AB
C301, C302	VCSATU1VF105M	1MFD, 35V, ±20%, Tantalum	AC
C303, C304, C305	VCSATU1HF335M	3.3MFD, 50V, ±20%, Tantalum	AE
C312, C313	VCEAAU1EW227Y	220MFD, 25V, +50 –10%	AC
C314, C315	VCEAAU1CW106Y	10MFD, 16V, +50 –10%	AB
C316, C317, C320, C321	VCEALU1EC475M	4.7MFD, 25V, ±20%	AB
C322, C323	VCEAAU1HW105Y	1MFD, 50V, +50 –10%	AB
C331, C332	VCEAAU0JW337Y	330MFD, 6.3V, +50 –10%	AC
C335	VCSATU1HF335M	3.3MFD, 50V, ±20%, Tantalum	AE
C405, C406	VCEALU1HC105M	1MFD, 50V, ±20%	AC
C407, C408	VCEALU1EC335M	3.3MFD, 25V, ±20%	AB
C409, C410	VCEAAU1HW106Y	10MFD, 50V, +50 –10%	AC
C423, C424	VCEALU1HC105M	1MFD, 50V, ±20%	AC
C425, C426	VCEALU1HW226M	22MFD, 50V, ±20%	AC
C427, C428	VCEALU1HC335M	3.3MFD, 50V, ±20%	AB
C429, C430	VCEALU1HW684M	.68MFD, 50V, ±20%	AB
C433	RC-EZS107AF1V	100MFD, 35V, ±20%	AC
C435, C436	VCEALU1HW684M	.68MFD, 50V, ±20%	AB
C501, C502	VCEALU1EC335A	3.3MFD, 25V, +75 –10%	AB
C507, C508	RC-EZ1038AFZZ	47MFD, 16V, +50 –10%	AB
C509, C510	RE-EZ1015AFZZ	220MFD, 16V, +50– 10%	AC
C511, C512	RC-EZ1038AFZZ	47MFD, 16V, +50 –10%	AB
C515, C516, C517, C518, C521, C522	RC-EZ1040AFZZ	47MFD, 63V, +50 –10%	AD

Digitized By Ridgeweller
For Free Distribution
DO NOT PAY FOR THIS DOCUMENT

PARTS LIST

REF. NO.	PART NO.	DESCRIPTION	CODE
C605, C606	VCEAAU1HW108Y	1000MFD, 50V, +50 –10%	AG
C607, C608	RC-EZS227AF1H	220MFD, 50V, ±20%	AC
C609, C610	RC-EZS107AF1V	100MFD, 35V, ±20%	AC
C611, C612	VCEAAU1HW476Y	47MFD, 50V, +50 –10%	AC
C613	RC-EZS107AF1C	100MFD, 16V, ±20%	AB
C615	RC-EZS107AF1V	100MFD, 35V, ±20%	AC
C616, C617	VCEAAU1CW476Y	47MFD, 16V, +50 –10%	AC
C618	VCEAAU1HW105Y	1MFD, 50V, +50 –10%	AB
C619	VCEAAU1EW106Y	10MFD, 25V, +50 –10%	AB
C621	VCEAAU1CW106Y	10MFD, 16V, +50 –10%	AB
C622, C623, C624,	VCEAAU1CW227Y	220MFD, 16V, +50 – 10%	AC
C625	VCEAAU1EW106Y	10MFD, 25V, +50 –10 %	AB
C627	RC-EZS107AFIC	100MFD,16V, ±20%	AB
C632	VCEAAU1HW108Y	1000MFD, 50V, +50 –10%	AG
C709, C710, C711, C712	RC-EZ1083AFZZ	1000MFD, 63V, +50 –10%	AW

MISCELLANEOUS

PART NO.	DESCRIPTION	CODE
GCAB-5103AFSA	Cabinet (SA-5601, SA5605)	BE
GCAB-5106AFSA	Cabinet (SA-5601C, SA-5605C)	–
GCOVA1075AFSC	Guide Lever Switch (Long) (SA-5601, SA-5601C)	AC
GCOVA1075AFSB	Guide Lever Switch (Long) (SA-5605, SA-5605C)	AC
GCOVA1119AFSA	Guide Lever Switch (Short) (SA-5601, SA-5601C)	AD
GCOVA1119AFSB	Guide Lever Switch (Short) (SA-5605, SA-5605C)	AC
GFTAC3076AFZZ	Bottom Plate	AV
GLEGP0002SG00	Leg	AD
HDALM0195AFSA	Dial Scale	AN
HDECB0087AFSA	Meter Cover	AG
HPNLC3352AFSA	Front Panel (SA-5601, SA-5601C)	BF
HPNLC3353AFSA	Front Panel (SA-5605, SA-5605C)	BG
HSSND0250AFSA	Dial Pointer	AF
JKNBM0136AFSE	Knob, Muting Switch (SA-5601, SA-5601C)	AC
JKNBM0136AFSD	Knob, Muting Switch (SA-5605, SA-5605C)	AC
JKNBN0316AFSA	Knob, Volume Control (SA-5601, SA-5601C)	AK
JKNBN0316AFSB	Knob, Volume Control (SA-5605, SA-5605C)	AK
JKNBM0330AFSA	Knob, Function Selector Switch, Recording Output/ Tape Dabbing Selector Switch, Speaker Selector Switch (SA-5601, SA-5601C)	AH
JKNBN0318AFSB	Knob, Function Selector Switch, Recording Output/ Tape Dabbing Selector Switch, Speaker Selector Switch (SA-5605, SA-5605C)	AH
JKNBN0338AFSA	Knob, Treble Control Switch, Mid Control Switch, Bass Control Switch, Balance Control Switch (SA-5601, SA-5601C)	AH
JKNBN0367AFSA	Knob, Treble Control Switch, Mid Control Switch, Bass Control Switch, Balance Control Switch, (SA-5605, SA-5605C)	AH
JKNBN0383AFSA	Knob, Tuning Control Switch (SA-5601, SA-5601C)	AL
JKNBN0383AFSB	Knob, Tuning Control Switch (SA-5605, SA-5605C)	AM
JKNBP0070AFSA	Knob, Power Switch, Low Cut Filter Switch, High Cut Filter Switch, Loudness Contour Switch, Mode Selector Switch, High Blend Switch, FM Muting Switch, Air Check Caliblation Switch, Phono Input Selector Switch, Band Selector Switch, Tape Monitor Switch (SA-5601, SA-5601C)	AH
JKNBP0070AFSB	Knob, Power Switch, Low Cut Filter Switch, High Cut Filter Switch, Loudness Contour Switch, Mode Selector Switch, High Blend Switch, FM Muting Switch, Air Check Caliblation Switch, Phono Input Selector Switch, Band Selector Switch, Tape Monitor Switch (SA-5605, SA-5605C)	AG
JKNBP0078AFSA	Knob, Tuner Switch (SA-5601, SA-5601C)	AE
JKNBP0078AFSB	Knob, Tuner Switch (SA-5605, SA-5605C)	AC
LANGF0467AFZZ	Bracket, Tuner P.W. Board Left Hand Side	AC
LANGQ0581AFZZ	Bracket, Audio Muting Switch	AB
LANGQ0619AFSA	Rear Panel (SA-5605)	AS
LANGQ0618AFSA	Rear Panel (SA-5601)	AT
LANGQ0632AFSA	Rear Panel (SA-5601C)	–
LANGQ0633AFSA	Rear Panel (SA-5605C)	–
LANGR0450AFZZ	Bracket, Front Chassis	AD
LANGR0451AFZZ	Bracket, Tuner Unit	AE
LANGR0452AFZZ	Bracket, Power Transformer Retaining	AM
LANGT0753AFZZ	Bracket, Chassis Left Hand Side	AE
LANGT0754AFZZ	Bracket, Chassis Right Hand Side	AF
LANGT0755AFZZ	Bracket, Power Amp P.W. Board Front Side	AF
LANGT0756AFZZ	Bracket, Power Amp P.W. Board Right Hand Side Retaining	AE
LANGT0757AFZZ	Bracket, Heat Sink Retaining	AB
LANGT0758AFZZ	Bracket, Dial Scale	AG
LANGT0759AFZZ	Bracket, Power Meter	AD
LANGT0760AFZZ	Bracket, Pully	AB
LBSHC0007AFZZ	Bushing, AC Cord	AB
LHLDW1050AFZZ	Wire Holder	AB
LHLDW1066AFZZ	Wire Holder	AA
LHLDW1068AFZZ	Wire Holder	AA

Digitized By RidgeDweller
For Free Distribution
DO NOT PAY FOR THIS DOCUMENT

PARTS LIST

Digitized By RidgeDweller
For Free Distribution
DO NOT PAY FOR THIS DOCUMENT

REF. NO.	PART NO.	DESCRIPTION	CODE
	LHLDW1075AFZZ	Wire Holder	AA
	LHLDW9002CEZZ		AA
	LHLDW9003CEZZ		AA
	LHLDZ1041AG00	Holder, FM Stereo Indicator and Opto Lock Indicator	AB
	LX-BZ0211AFZZ	Screw, Acryl Plate of Dial Illumination	AA
	LX-BZ0220AFFF	Screw, AC Outlets Socket	AA
	LX-HZ0001SGFD	Screw, Electrolytic Capacitor Retaining	—
	LX-HZ0053AFFD	Screw, P.W. Board Retaining	—
	LX-HZ0056AFFD	Screw, Cabinet (SA-5601, SA-5605)	—
	LX-HZ0064AFFF	Screw, Cabinet	—
	LX-LZ0055AF00	Push Rivet, LED Printed Wiring Board Retaining	—
	LX-NZ0118AFFD	Nut, Function Selector Switch, Speaker Selecter Switch and REC Out Selector Switch	AA
	LX-NZ0127AFFW	Hexagon Head Cap Screw, Speaker Selector Switch Shaft and Function Selector Switch Shaft	AD
	LX-NZ0120AFFD	Nut, Power Trans Retaining	AA
	LX-WZ0019AFFW	Washer, Ground Terminal	AA
	LX-WZ3061AFZZ	Washer, Function Selector Switch and Speaker Selector Switch	AA
	LX-WZ9059AFZZ	Washer, Acryl Plate of Dial Illumination	AA
	NSPRT0386AFFJ	Spring, Dial Illumination	AB
	NDRM-0150AFZZ	Drum, Dial Cord	AF
	NPLYB0001SGZZ	Pully, Dial Cord	AB
	NPLYC0101AFFD	Shaft, Pully	AA
	NSFTD0186AFFW	Tuning Shaft with Flywheel	AM
	PCOVU3116AFZZ	Shading Plate (Lower side)	AC
	PCOVU9108AFZZ	Shading Plate (Upper side)	AA
	PCUSU0224AFZZ	Cushion, Meter	AA
	PRDAR0101AFFW	Heat Sink (Small)	AB
	PRDAR0153AFZZ	Heat Sink (Medium)	AC
	PRDAR0178AFZZ	Heat Sink (Large)	AX
	PREFL0067AFZZ	Acryl Plate, Dial Illumination	—
	PREFL0068AFZZ	Acryl Plate, Power Meter Illumination	—
	PSHEF0110AFZZ	Felt, Lever Switch	AA
	PSHEF0114AF00	Felt, Lever Switch	AA
	PSPAG0063AF00	Cushion	AA
	PSPAS0008SGSA	Spacer, Audio Muting Switch (SA-5601, SA-5601C)	AB
	PSPAS0008SGSB	Spacer, Audio Muting Switch (SA-5605, SA-5605C)	AB
	PSPAS0054AFZZ	Spacer, Headphones Jack	AC
	PSPAS0066AF00	Spacer, Tuning Switch	AA
	PSPAS0070AFZZ	Spacer, Tuning Control Shaft	AA
	QACCU0052AFZZ	AC Cord with Plug	AG
	QANTW0051AFZZ	FM Antenna	AH
F602	QFS-B202AAFNB	Fuse, 2.0A 125V	AE
F601	QFS-B702AAFNB	Fuse, 7.0A 125V	AH
	QFSHD1001SEZZ	Holder, Fuse	AA
J601	QJAKJ0057AFZZ	Jack, Headphone	AG
	QLUGZ011AAFZZ	Lug, Grounding	AA
	QLUGZ016AAFZZ	Jumper, AC Outlets Socket	AA
	QPWBF0788AFZZ	P.W. Board, Tuner/EQ Amp (P.W. Board only)	—
	QPWBF0789AFZZ	P.W. Board, Tone Amp/Voltage Regulator (P.W. Board only)	—
	QPWBF0790AFZZ	P.W. Board, Main Amp (P.W. Board only)	—
SO901, SO902	QSOCA0402SGZZ	Socket, AC Outlets	AF
SO301	QSOCJ2262AFZZ	Socket, TAPE 1 (REC and PB Ⓟ)	AE
SO302	QSOCJ2264AFZZ	Socket, TAPE 2 (REC and PB Ⓟ)	AE
SO303	QSOCJ2264AFZZ	Socket, Input (AUX Ⓟ)	AD
	QSOCT0353AFZZ	Socket, Power Transister	AD
SO304	QSOCZ2472AFZZ	Socket, Input (Phono-1, Phono-2)	AH
SW201	QSW-B0063AFZZ	Band Selector Switch	AH
SW202	QSW-B0051AFZZ	Air Check Calibration Switch	AK
SW203	QSW-B0051AFZZ	FM Muting Switch	AK
SW204	QSW-B0051AFZZ	Hi-Blenda Switch	AK
SW205	QSW-B0051AFZZ	Mode Selector Switch	AK
SW301	QSW-R0157AFZZ	Function Selector Switch	AM
SW302	QSW-B0073AFZZ	Tape Monitor Switch	AH
SW303	QSW-B0051AFZZ	Phono Input Selector Switch	AK
SW304	QSW-R0156AFZZ	REC Out Selector Switch	AQ
SW401	QSW-P0190AFZZ	Audio Muting Switch	AG
SW402	QSW-B0051AFZZ	Loudness Switch	AK
SW403	QSW-B0051AFZZ	Low Cut Filter Switch	AK
SW404	QSW-B0051AFZZ	High Cut Filter Switch	AK
SW901	QSW-B9075AFZZ	Power Switch	AN
SW902	QSW-P0189AFZZ	Tuner Switch	AL
SW903	QSW-R0185AFZZ	Speaker Selector Switch	AD
	QTANN0150AFZZ	Ground Terminal	AD
	QTANN0453AFZZ	Antenne Terminals, FM (75ohm and 300ohm) and AM	AH
SO901, SO902, SO903	QTANZ0455AFZZ	Speakers Terminals	AG
PL901	RLMPM0101AFZZ	Lamp 8V 0.3A	AF
PL902, PL903	RLMPM0097AFZZ	Lamp 8V 0.3A 145mm	AF
PL904	RLMPM0098AFZZ	Lamp 8V 0.3A 275mm	AF
PL905	RLMPM0099AFZZ	Lamp 8V 0.3A 370mm	AF
PL906	RLMPM0100AFZZ	Lamp 8V 0.3A 475mm	AF
M901	RMTRL0179AFZZ	Signal Meter	AR
M902	RMTRL0178AFZZ	Tuning Meter	AR
M903, M904	RMTRL0177AFZZ	Power Meter	AR
RLY601	RRLYZ0050AFZZ	Relay, DC 24V, Protection Circuit	AW
	RTUNF0064AFZZ	FM, Tuner Unit	BF
	SPAKA0545AFZZ	Packing Add	AK
	SPAKC1207AFZZ	Packing Case (SA-5601)	AP
	SPAKC1251AFZZ	Packing Case (SA-5601C)	—
	SPAKC1208AFZZ	Packing Case (SA-5605)	—
	SPAKC1261AFZZ	Packing Case (SA-5605C)	—
	SSAKA0007SEZZ	Polyethylene Bag	AA
	SSAKZ0056AFZZ	Dust Cover	AG
	TINSE0584AFZZ	Operation Manual (SA-5601, SA-5605)	AH
	TINSK0033AFZZ	Operation Manual (SA-5601C, SA-5605C)	—

Digitized By RidgeDweller
For Free Distribution
DO NOT PAY FOR THIS DOCUMENT

SHARP CORPORATION OSAKA, JAPAN

SHARP ELECTRONICS CORPORATION

Executive Office:

10 Keystone Place,	Paramus,	New Jersey	07652	(201) 265-5600

Regional Offices & Distribution Centers:

2 Keystone Place	Paramus,	New Jersey	07652	(201) 262-9000
21580 Wilmington Ave.,	Long Beach,	Calif.	90810	(213) 830-4470

U.S. Subsidiary of Sharp Corporation, Osaka, Japan

Parts Centers:

P.O. Box 664	Paramus,	New Jersey	07652	(201) 262-9000
P.O. Box 20394	Long Beach,	Calif.	90801	(213) 830-4470

A7901-3.23MNK
Printed in Japan