Parsek

LITTLE MARK III
COMBO HEAD II

SERVICE MANUAL

Mark bass

2009 EDITION

How to disassemble the LMIII / CHII preamp

1. Remove the six black knobs and the three yellow knobs pulling out as indicated in the picture (red arrow).
2. Remove the nine silver hexagonal nuts using a 10 or 11 mm nut screwdriver.
3. Remove the black hexagonal nut using a 15 mm nut screwdriver (see yellow arrow).



---

4. Remove the four connectors from the preamp (yellow arrows).
5. Remove the three screws (red arrows).

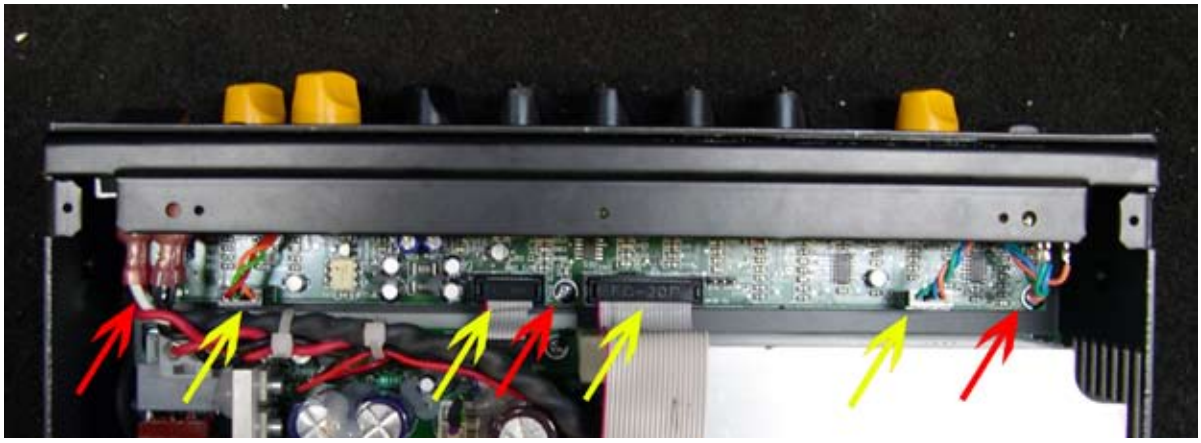

How to disassemble the LMIII / CHII poweramp

1. Remove the four connectors (yellow arrows).
2. Cut the two ties (green arrows).
3. Remove the six screws (red arrows).

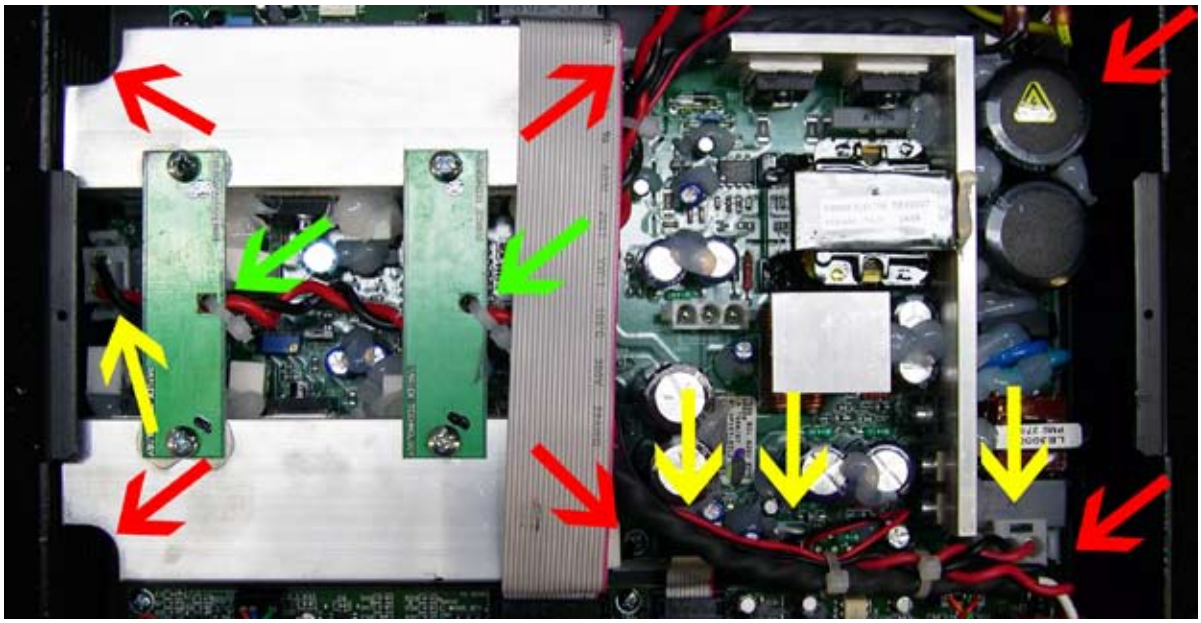

How to disassemble the LMIII / CHII front panel components

1. Remove the two screws with a 2.5 mm hexagonal wrench (red arrows).



---

2. Remove the four faston connectors (red circle).
3. Press on the top and bottom ends of the power switch (red arrows) to remove it from the panel.

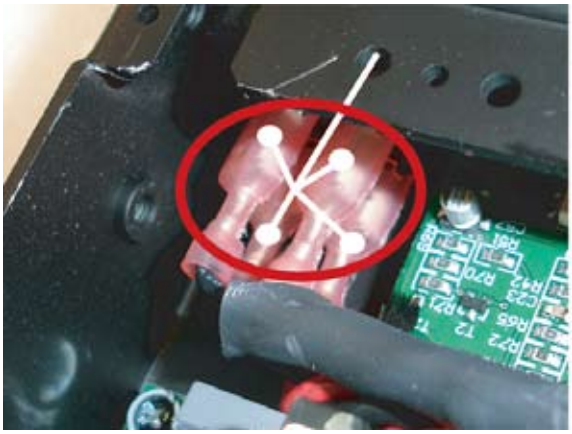



How to Disassemble the LMIII / CHII rear panel components

1. Remove the four hexagonal nuts using a 15 mm nut screwdriver (green arrows).
2. Using a screwdriver, remove the two screws of the line out jack and the two screws of the speaker out speakon combo jack (yellow arrows).
3. Using a screwdriver, remove the four screws of the fan (red arrows).

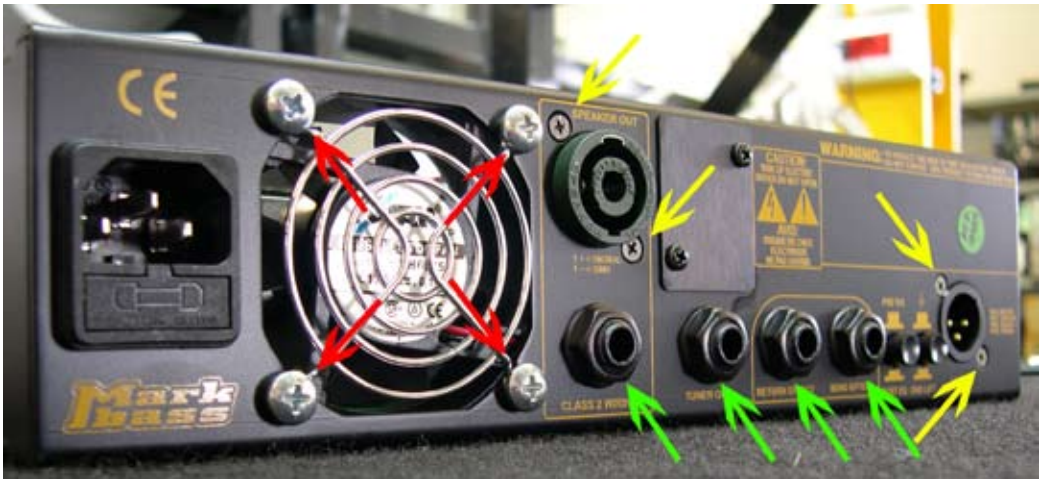

4. Using a screwdriver, remove the screw of the back panel (red arrow) and remove the 20-pin flat connector (yellow arrow).
5. Remove the ground hexagonal nut (red circle) using a 7 mm nut screw driver.

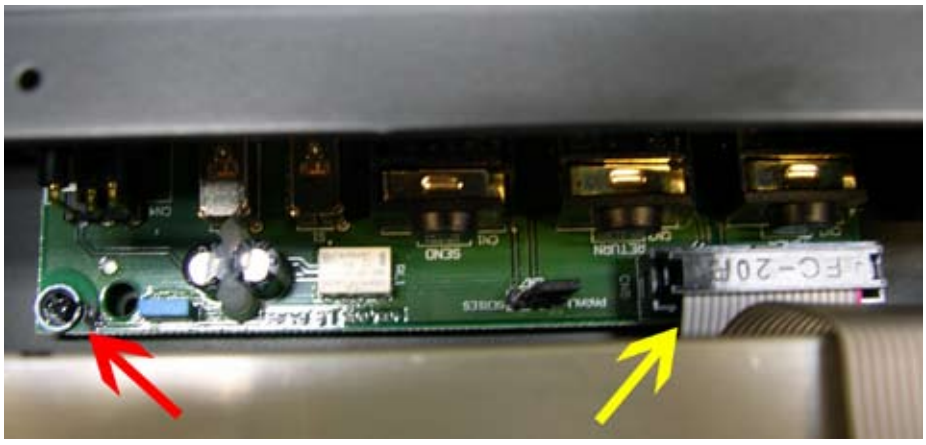

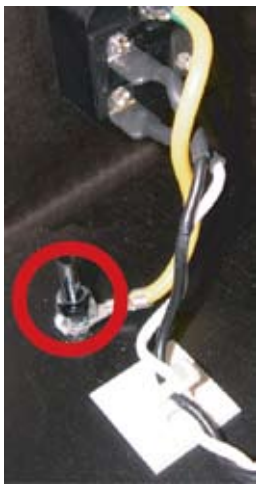

---

6. Press on the top and bottom (red arrows) ends of the AC power jack to remove it from the panel.





Effects Loop Modification

The images below show how the effects loop in your amp can be modified to run in series.
The default factory setting is parallel.

PARALLEL CONNECTION

LMIII / CHII PREAMP SECTION	REAR PANEL SECTION
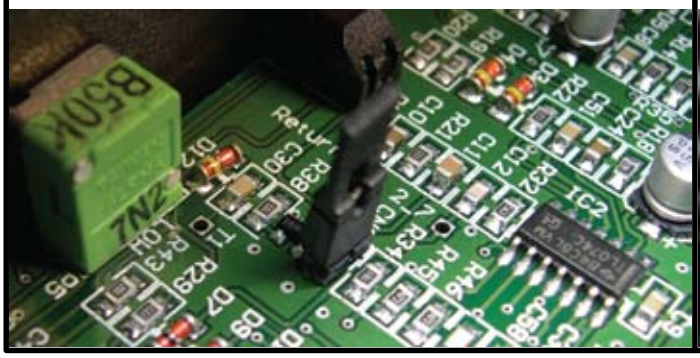	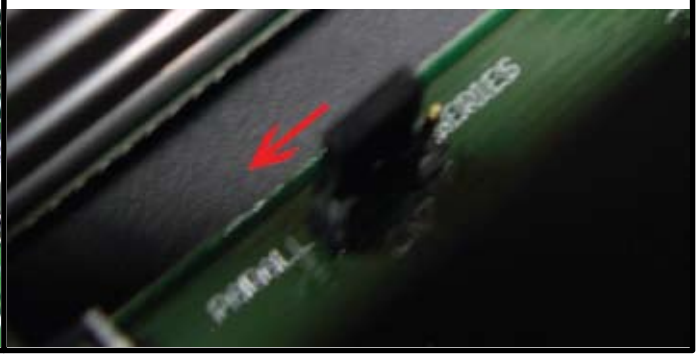

SERIAL CONNECTION

LMIII / CHII PREAMP SECTION	REAR PANEL SECTION
	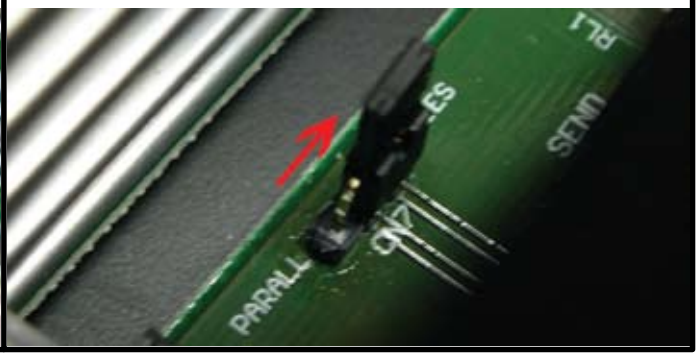

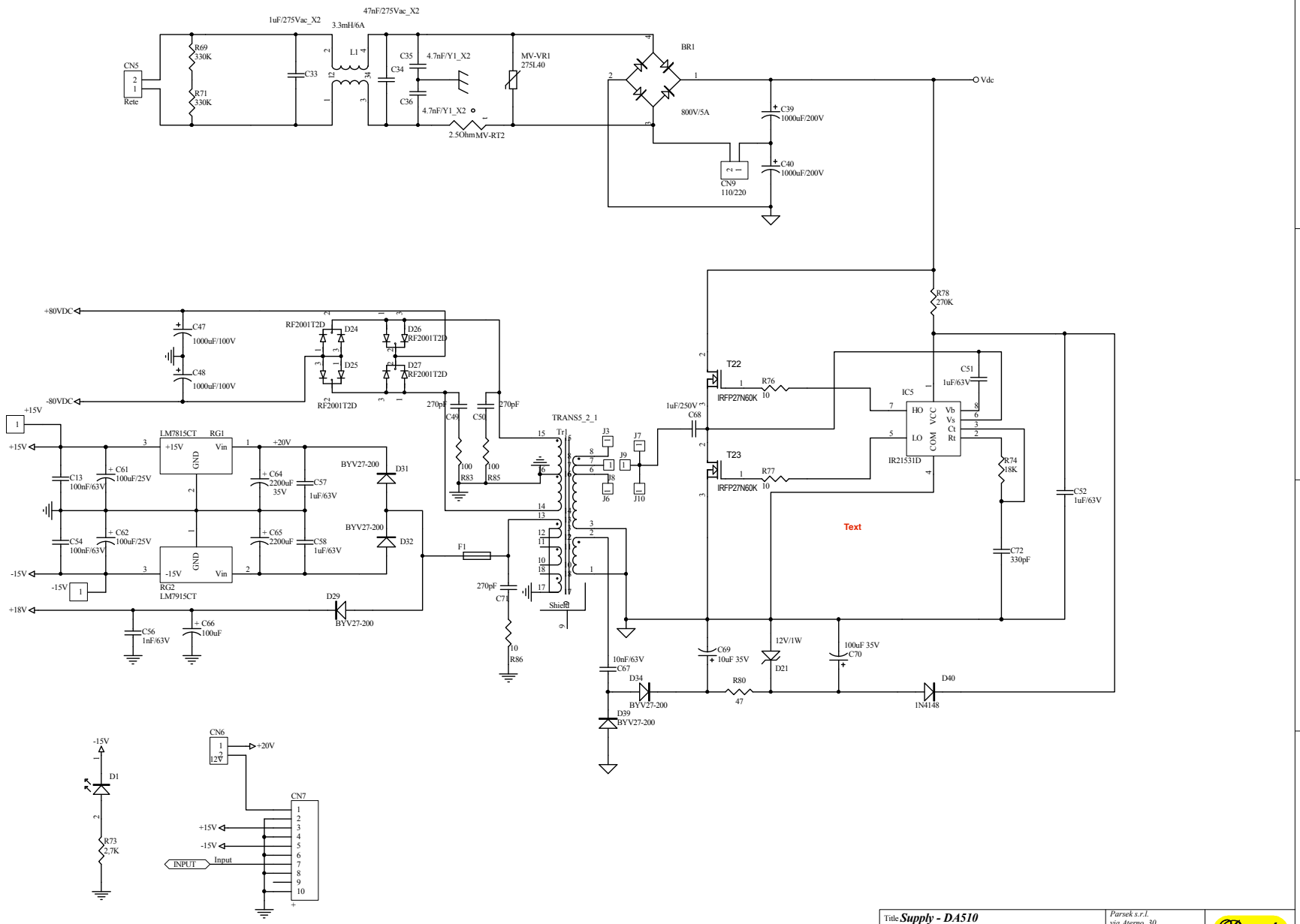

Title: ***Supply - DA510***			*Parsek s.r.l.* *via Aterno, 30* *66020 S. Giovanni Teatino* *Chieti* *Italy*
Size: A3	Number:	Revision:	
Date: 18-Dec-2008	Time: 12:40:39	Sheet5 of 5	
File: I:\PSRK\Amplifier\DA510\Edizione_ed.B\DA510_ed_B.DDB - Supply.Sch			

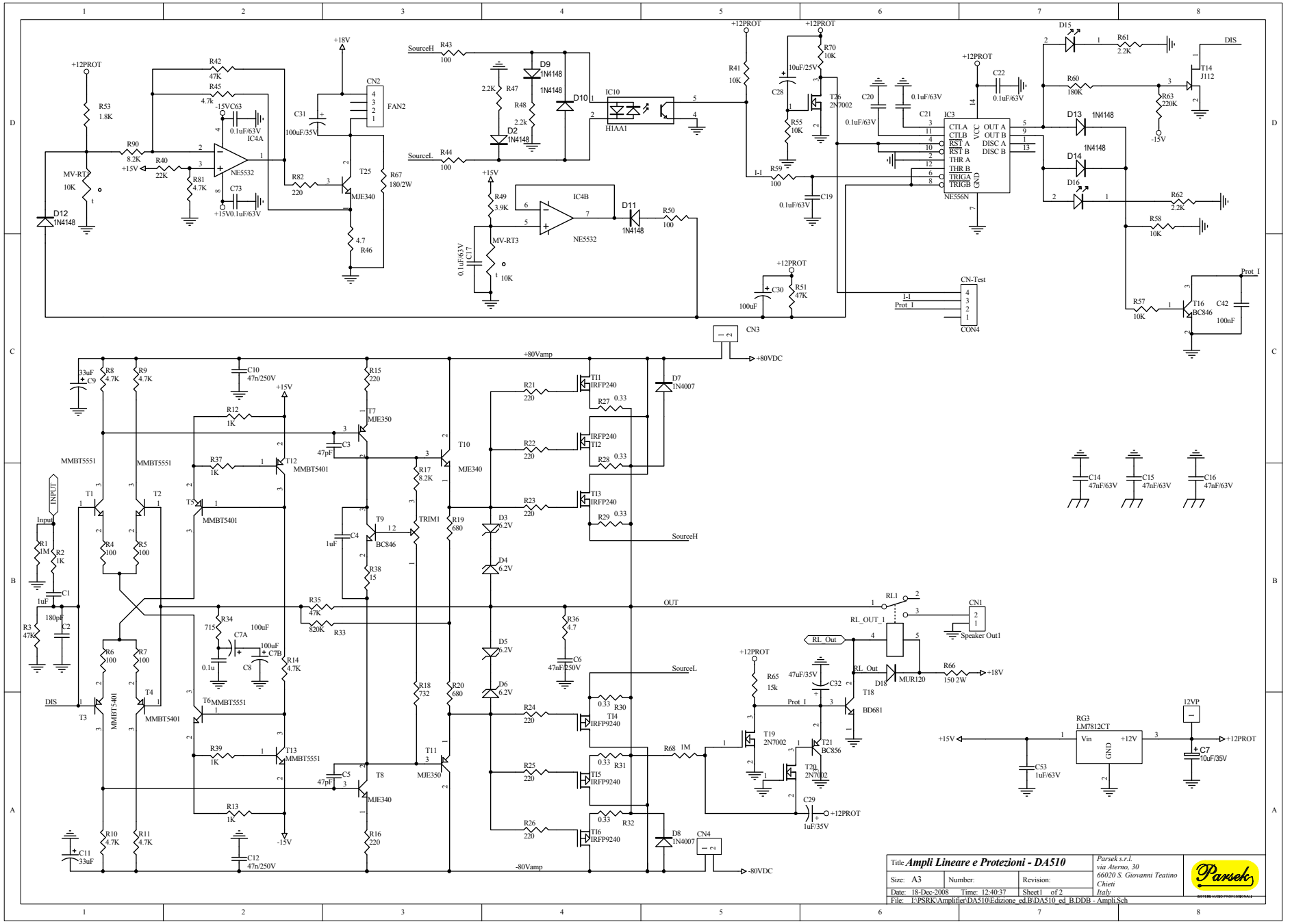

Title **Ampli Lineare e Protezioni - DA510**			Parsek s.r.l. via Aterno, 30 66020 S. Giovanni Teatino Chieti Italy
Size: A3	Number:	Revision:	
Date: 18-Dec-2008	Time: 12:40:37	Sheet1 of 2	
File: I:\PSRK\Amplifier\DA510\Edizione_ed.B\DA510_ed_B.DDB - Ampli.Sch			

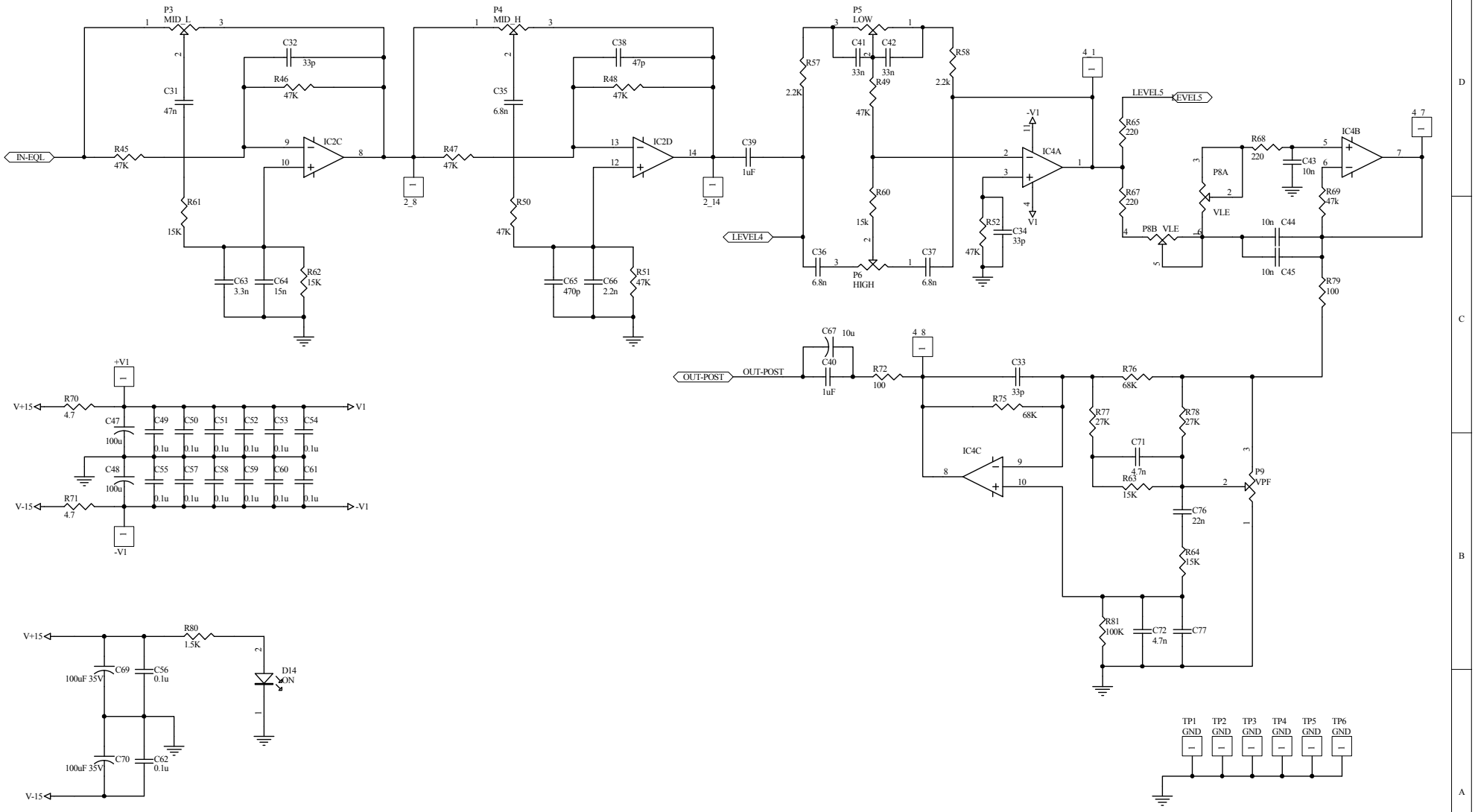

Title **Little Mark III**			Parsek s.r.l. via Aterno, 30 66020 S.Giovanni Teatino Chieti ITALY
Size: B	Number:	Revision:	
Date: 22-Jan-2009	Time: 17:47:04	Sheet 2 of 3	
File: Sheet2.Sch			

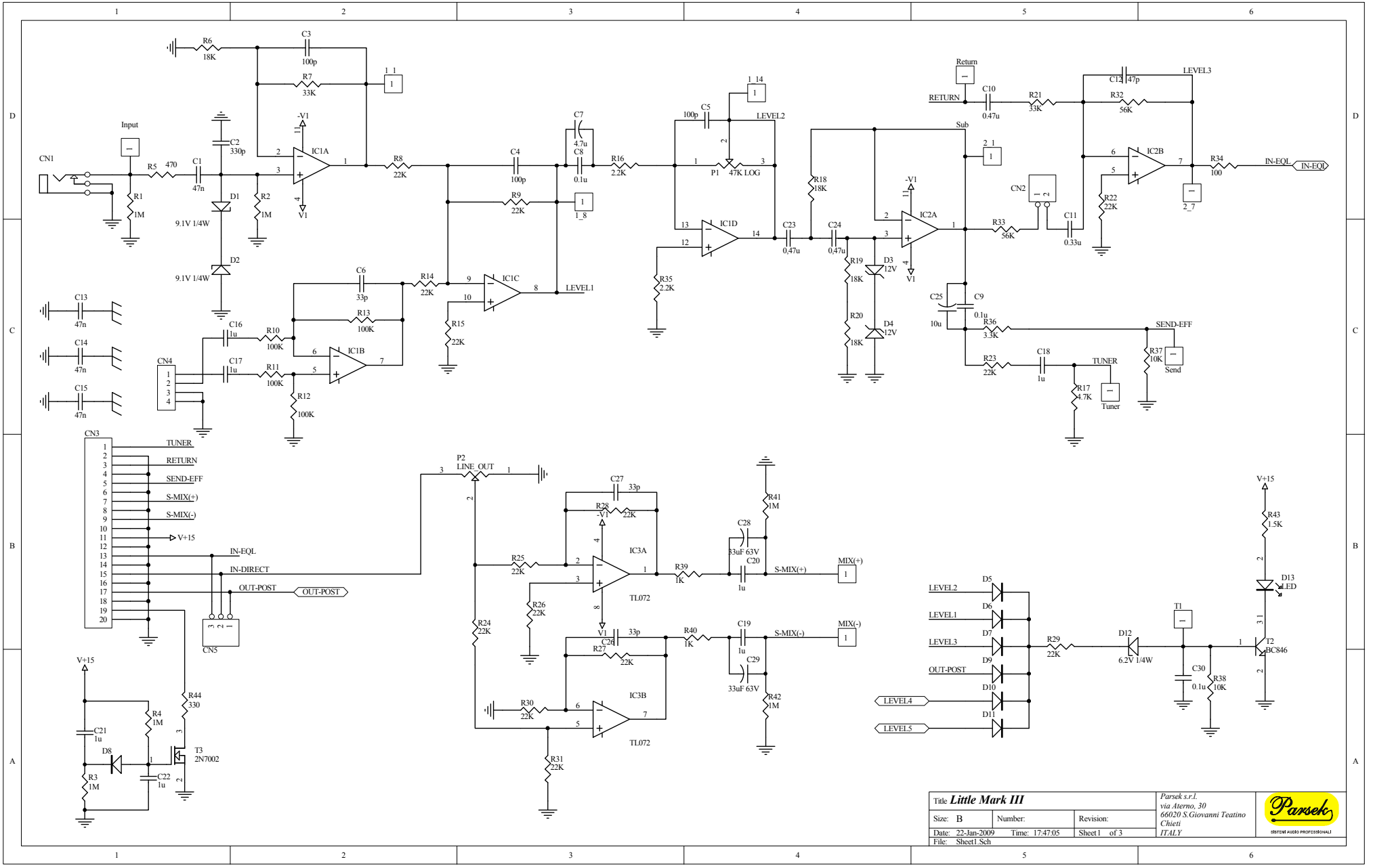

Title *Little Mark III*			*Parsek s.r.l.* *via Aterno, 30* *66020 S.Giovanni Teatino* *Chieti* *ITALY*
Size: B	Number:	Revision:	
Date: 22-Jan-2009	Time: 17:47:05	Sheet 1 of 3	
File: Sheet1.Sch			

Parsek
SISTEMI AUDIO PROFESSIONALI

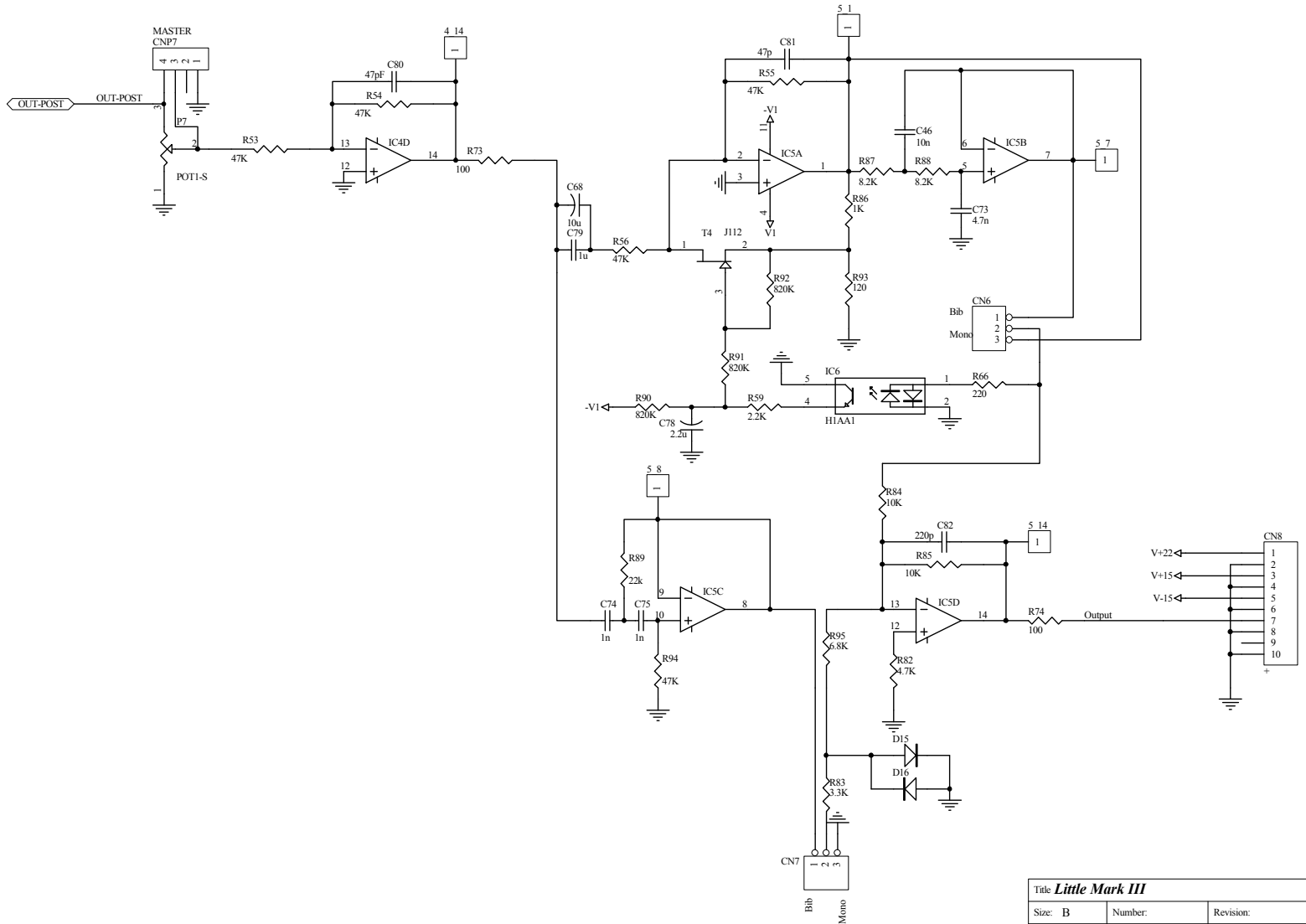
MASTER
CNP7
OUT-POST
OUT-POST
P7
POT1-S
R53
47K
C80
47pF
R54
47K
IC4D
R73
100
C68
10u
C79
1u
R56
47K
T4 J112
R92
820K
R93
120
C81
47p
R55
47K
-V1
IC5A
V1
R87
8.2K
R88
8.2K
C46
10n
IC5B
C73
4.7n
R86
1K
CN6
Bib
Mono
R91
820K
IC6
H1AA1
R66
220
R90
820K
C78
2.2u
R59
2.2K
R84
10K
C82
220p
R85
10K
R89
22k
IC5C
C74
1n
C75
1n
R94
47K
IC5D
R74
100
Output
R95
6.8K
R82
4.7K
D15
D16
R83
3.3K
CN7
Bib
Mono
CN8
V+22
V+15
V-15
Title Little Mark III
Size: B
Number:
Revision:
Date: 22-Jan-2009 Time: 17:47:05
Sheet 3 of 3
File: Sheet3.Sch
Parsek s.r.l.
via Aterno, 30
66020 S.Giovanni Teatino
Chieti
ITALY
Parsek
BIBITEMI AUDIO PROFESSIONALI