PATHOS

Logos

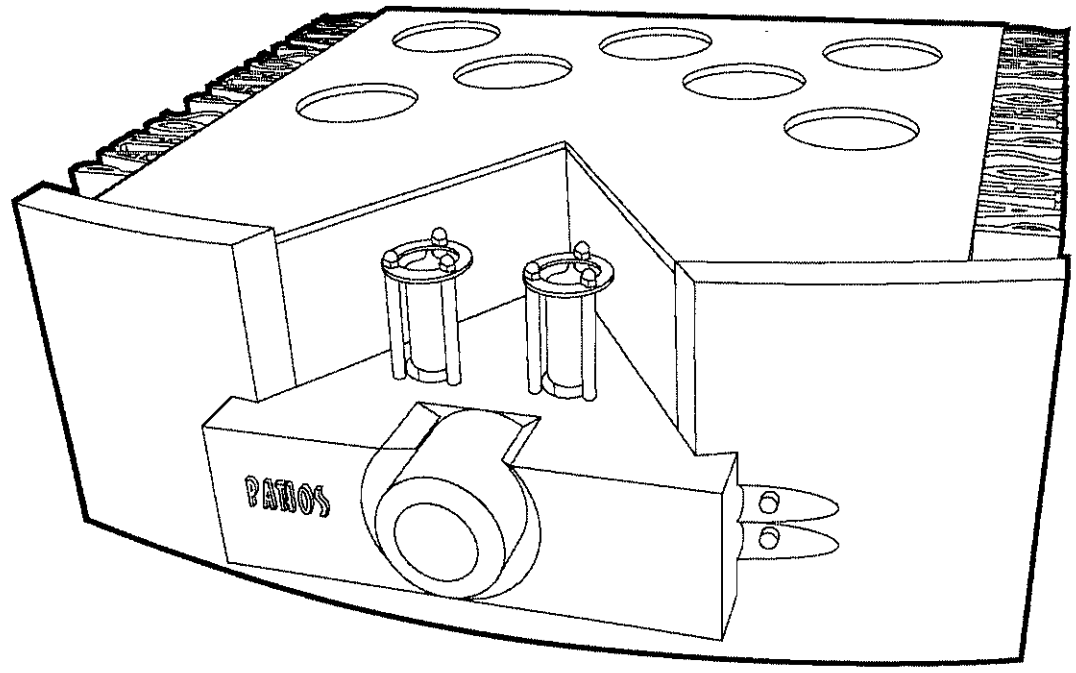

Service manual

Pathos Acoustics, info@pathosacoustics.com, tel: +39 0444 264 732 fax: +39 0444 381 275

Logos - Power supply and microcontroller -

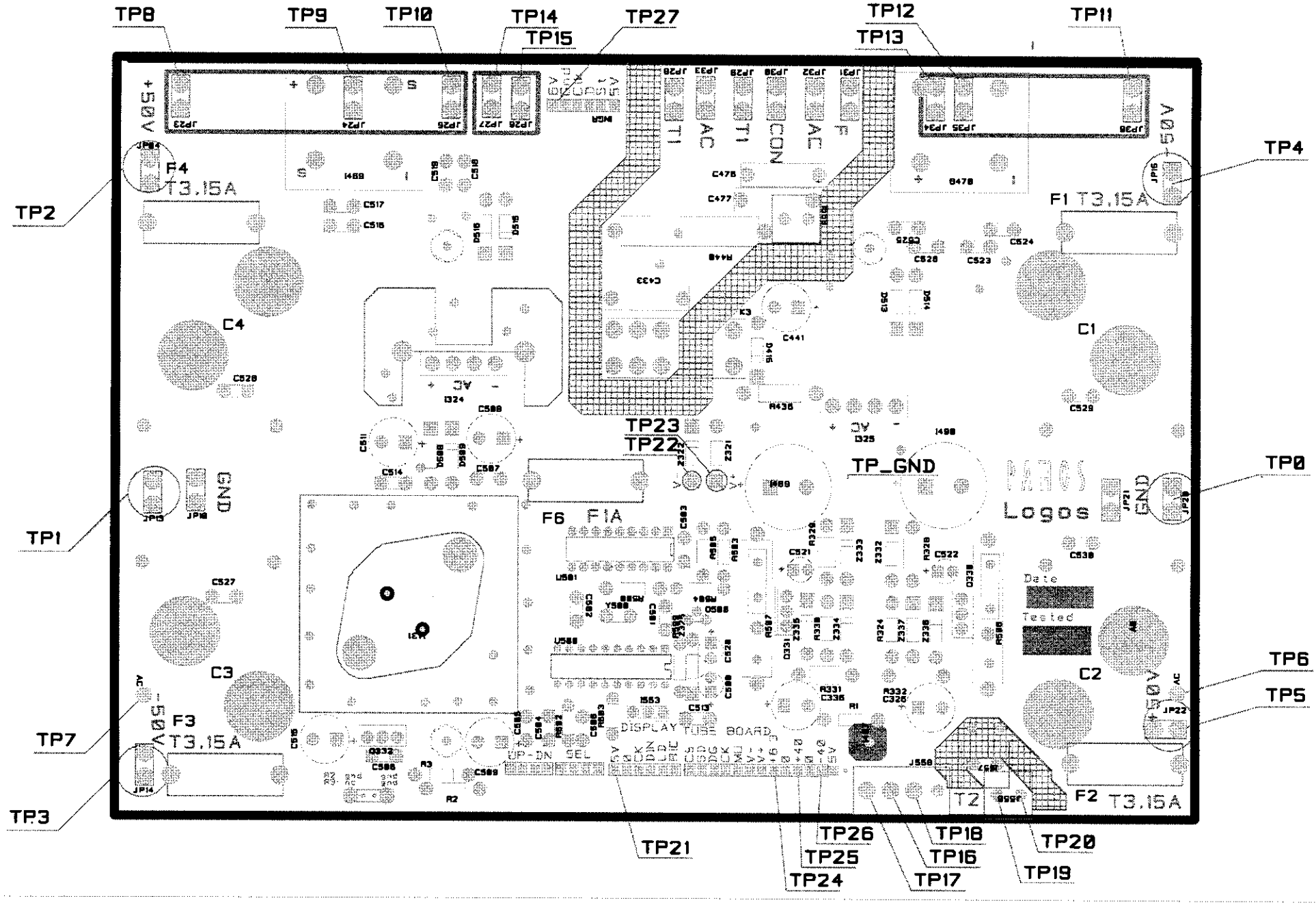

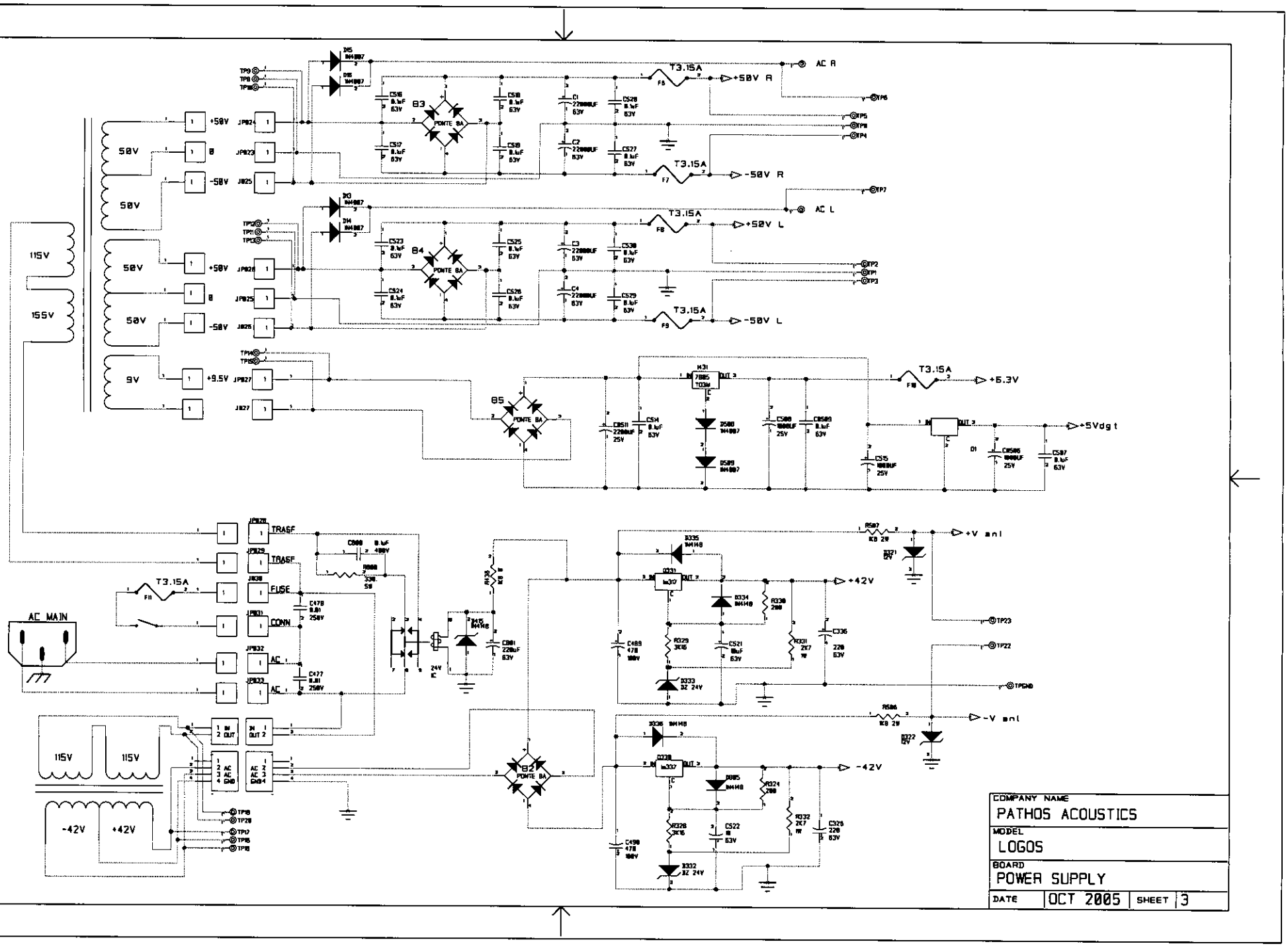
115V
155V
50V
50V
50V
9V
+50V
0
-50V
+9.5V
JP824
JP823
JP825
JP826
JP825
JP826
JP827
JP827
JP828
JP829
JP830
JP831
JP832
JP833
TRASF
TRASF
FUSE
CONN
AC
AC
AC MAIN
T3.15A
T3.15A
T3.15A
T3.15A
T3.15A
+50V R
-50V R
+50V L
-50V L
AC R
AC L
+6.3V
+5Vdgt
+42V
-42V
+V anl
-V anl
B3
B4
B5
B2
PONTE 8A
115V
115V
-42V
+42V
COMPANY NAME
PATHOS ACOUSTICS
MODEL
LOGOS
BOARD
POWER SUPPLY
DATE
OCT 2005
SHEET
3

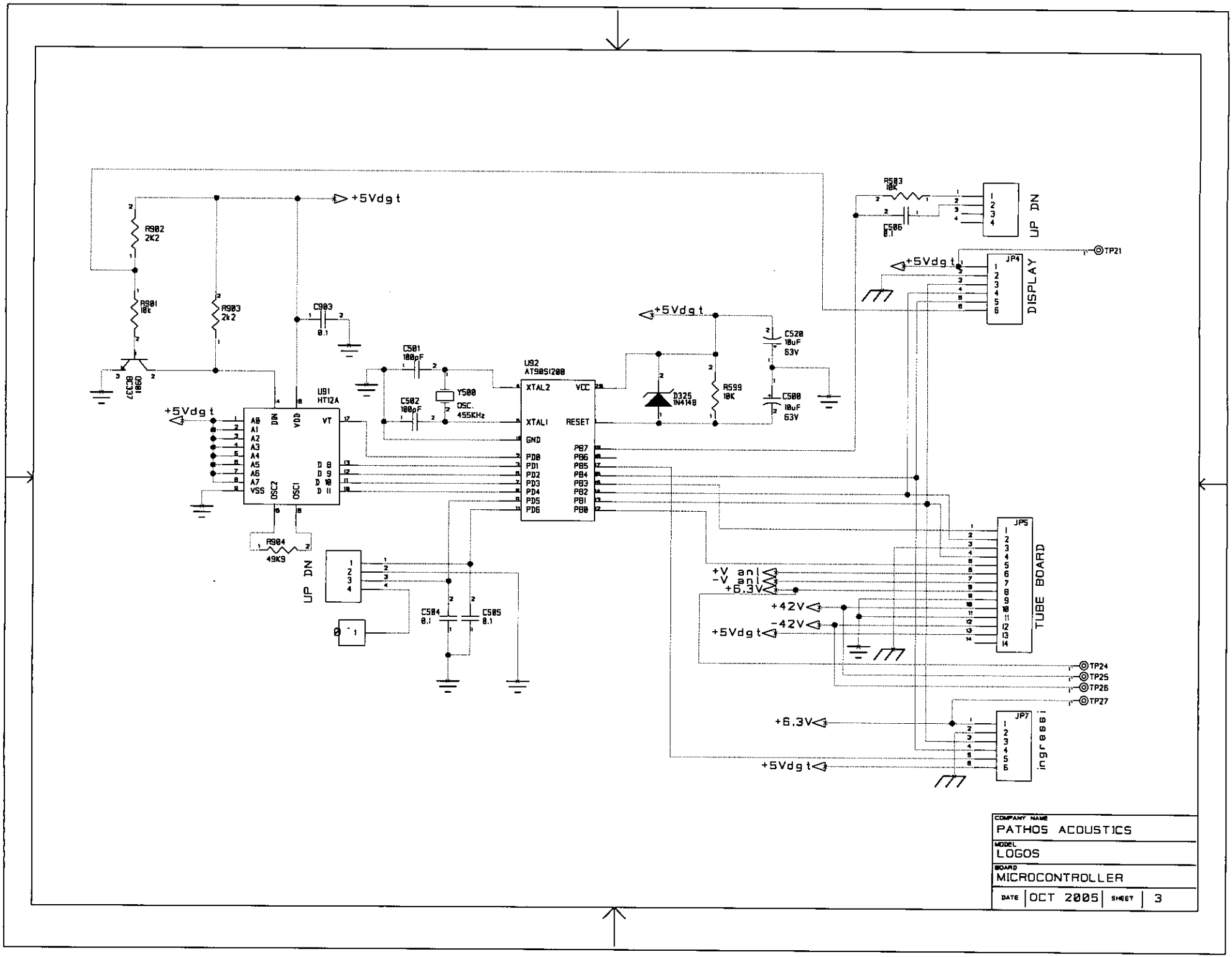
+5Vdgt
R902 2K2
R901 10k
R903 2k2
BC337 1060
C903 0.1
C501 100pF
C502 100pF
Y500 OSC. 455KHz
U91 HT12A
A8 A1 A2 A3 A4 A5 A6 A7 VSS DIN VDD VT OSC2 OSC1 D8 D9 D10 D11
R904 49K9
UP DN
C504 0.1
C505 0.1
U92 AT90S1200
XTAL2 XTALI GND VCC RESET PB7 PB6 PB5 PB4 PB3 PB2 PB1 PB0 PD0 PD1 PD2 PD3 PD4 PD5 PD6
D325 1N4148
R599 10K
C520 10uF 63V
C508 10uF 63V
R503 10K
C506 0.1
UP DN
JP4 DISPLAY
TP21
+V anl
-V anl
+6.3V
+42V
-42V
+5Vdgt
JP5 TUBE BOARD
TP24
TP25
TP26
TP27
+6.3V
+5Vdgt
JP7 ingressi
COMPANY NAME PATHOS ACOUSTICS
MODEL LOGOS
BOARD MICROCONTROLLER
DATE OCT 2005 SHEET 3

Power Supply & Microcontroller	
Test Point	Voltage relative to ground
TPGND	GND 0V
TP0	GND 0V
TP1	GND 0V
TP2	3- ,0 V DC
TP0	-3- ,0 V DC
TP-	-3- ,0 V DC
TP3	3- ,0 V DC
TP4	- 0-- 3V DC
TP5	- 0-- 3V DC
TP6-TP7	- 1V AC
TP6-TP10	- 1V AC
TP11-TP12	- 1V AC
TP11-TP10	- 1V AC
TP1- -TP13	7,4V AC
TP17-TP20	AC MAIN
TP14-TP15	- 2V AC
TP14-TP16	- 2V AC
TP21	3,03V DC
TP22	-12V DC
TP20	+12V DC
TP2-	+4,00V DC
TP23	+- 1,3V DC
TP24	– 1,3V DC
TP25	4,00V DC

Preamplifier

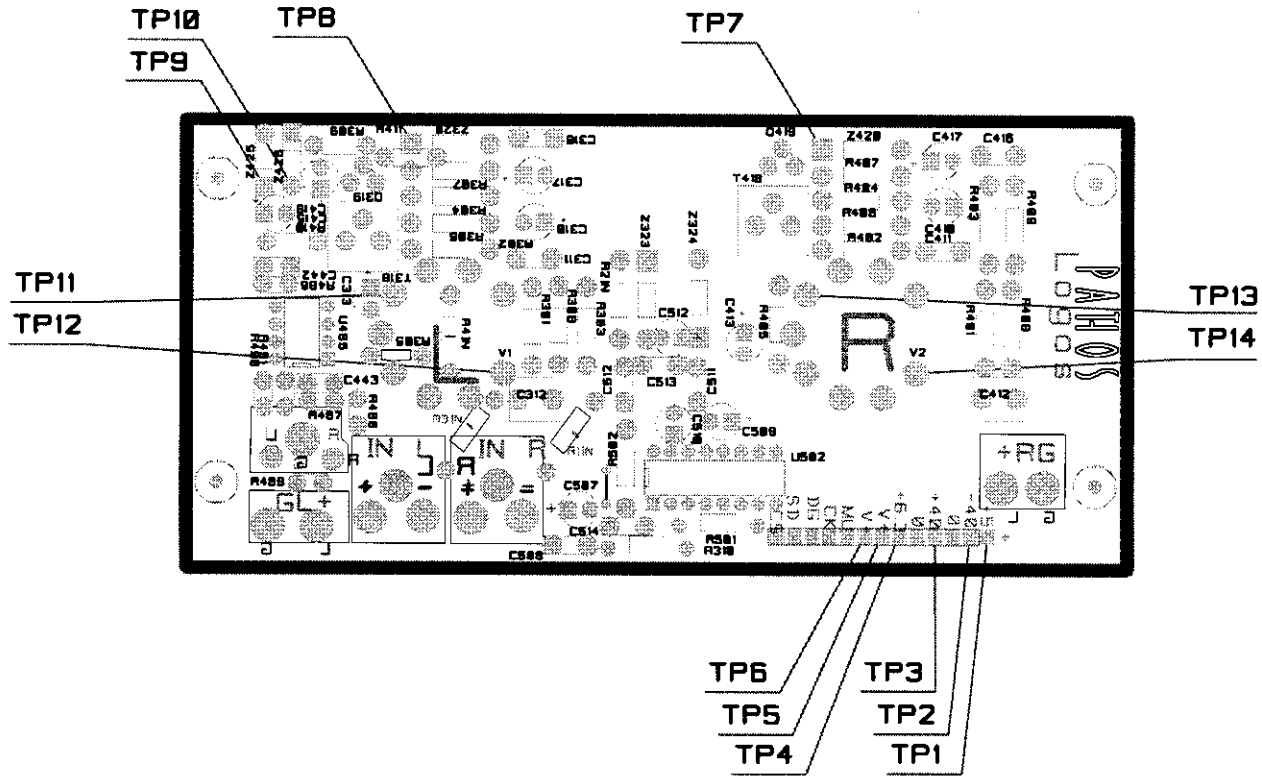

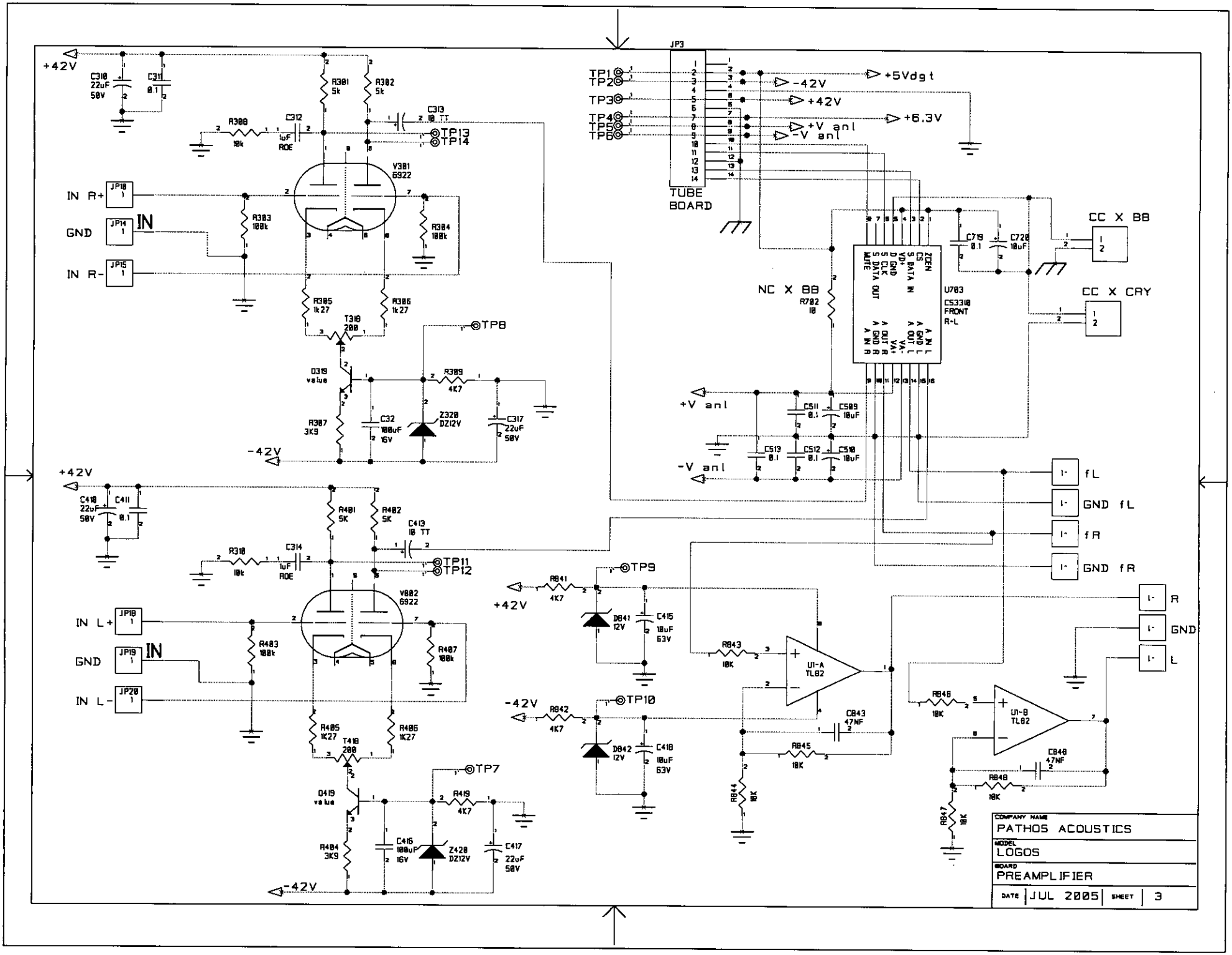
+42V
C310 22uF 50V
C311 0.1
R301 5k
R302 5k
R308 10k
C312 1uF ROE
C313 10 TT
TP13
TP14
V301 6922
IN R+
GND
IN R-
JP18
JP14
JP15
IN
R303 100k
R304 100k
R305 1k27
R306 1k27
T301 200
TP8
D301 value
R309 4K7
R307 3K9
C32 100uF 16V
Z320 DZ12V
C317 22uF 50V
-42V
+42V
C410 22uF 50V
C411 0.1
R401 5K
R402 5K
C413 10 TT
R310 10k
C314 1uF ROE
TP11
TP12
V302 6922
IN L+
GND
IN L-
JP18
JP19
JP20
IN
R403 100k
R407 100k
R405 1K27
R406 1K27
T401 200
TP7
D401 value
R419 4K7
R404 3K9
C416 100uF 16V
Z420 DZ12V
C417 22uF 50V
-42V
JP3
TP1
TP2
TP3
TP4
TP5
TP6
+5Vdgt
-42V
+42V
+6.3V
+V anl
-V anl
TUBE BOARD
NC X BB
R702 10
U703
CS3310 FRONT R-L
CC X BB
CC X CRY
C719 0.1
C720 10uF
+V anl
-V anl
C511 0.1
C509 10uF
C513 0.1
C512 0.1
C510 10uF
fL
GND fL
fR
GND fR
TP9
TP10
R841 4K7
R842 4K7
D841 12V
D842 12V
C415 10uF 63V
C418 10uF 63V
R843 10K
R844 10K
R845 10K
C843 47NF
U1-A TL82
R846 10K
R847 10K
R848 10K
C848 47NF
U1-B TL82
R
GND
L
COMPANY NAME
PATHOS ACOUSTICS
MODEL
LOGOS
BOARD
PREAMPLIFIER
DATE | JUL 2005 | SHEET | 3

Preamplifier	
Test Point	Voltage relative to ground
TP1	5,05V DC
TP2	-41,5V DC
TP3	+41,5V DC
TP4	+6,3V DC
TP5	+12V DC
TP6	-12V DC
TP7	29,5V DC
TP8	-29,5V DC
TP9	12,2V DC
TP10	-12,2V DC
TP11	29,5V DC
TP12	29,5V DC
TP13	29,5V DC
TP14	29,5V DC

Power Amp

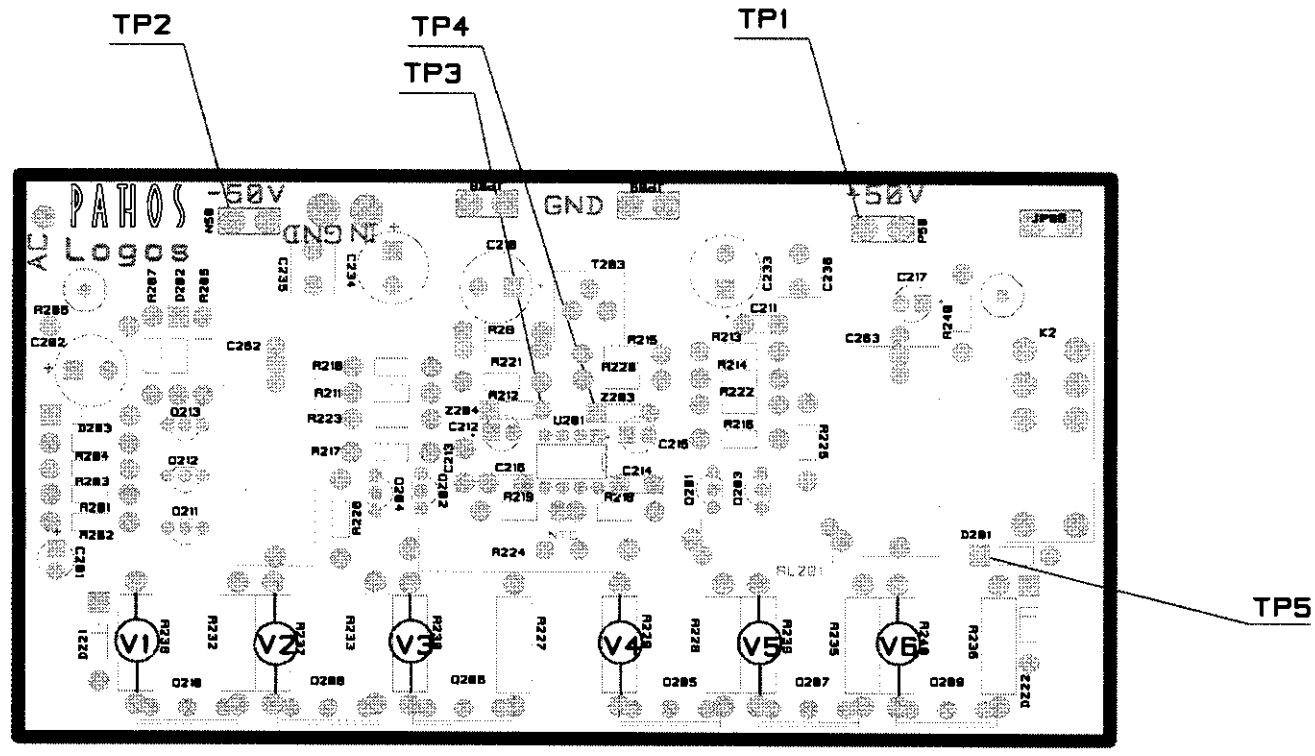
TP2
TP4
TP3
TP1
TP5
-60V
GND
+50V
PATHOS
AC Logos
IN GND
V1
V2
V3
V4
V5
V6

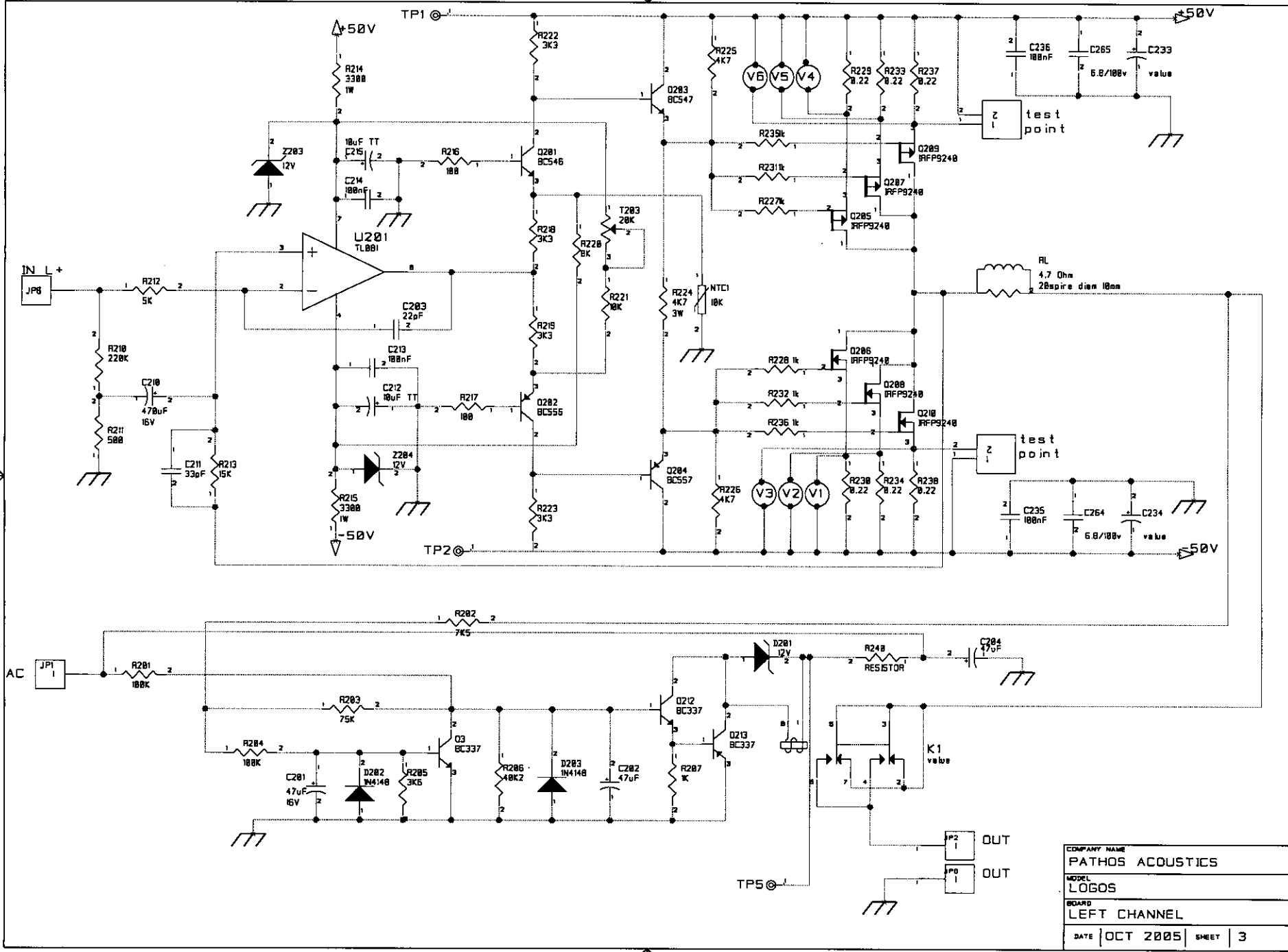
TP1
+50V
R222 3K3
R214 3300 1W
Z203 12V
10uF TT C215
R216 100
Q201 BC546
C214 100nF
U201 TL081
R218 3K3
T203 20K
R220 8K
R221 10K
R219 3K3
C203 22pF
C213 100nF
C212 10uF TT
R217 100
Q202 BC556
Z204 12V
R215 3300 1W
-50V
TP2
IN L+
JP6
R212 5K
R210 220K
C210 470uF 16V
R211 500
C211 33pF
R213 15K
Q203 BC547
R225 4K7
V6
V5
V4
R229 0.22
R233 0.22
R237 0.22
C236 100nF
C265 6.8/100v
C233 value
test point
R235k
R231k
R227k
Q209 IRFP9240
Q207 IRFP9240
Q205 IRFP9240
R224 4K7 3W
NTC1 10K
AL 4.7 Ohm 20spire diam 10mm
Q206 IRFP9240
Q208 IRFP9240
Q210 IRFP9240
R228 1k
R232 1k
R236 1k
Q204 BC557
R226 4K7
V3
V2
V1
R230 0.22
R234 0.22
R238 0.22
C235 100nF
C264 6.8/100v
C234 value
AC
JP1
R201 100K
R202 7K5
R203 75K
R204 100K
Q3 BC337
C201 47uF 16V
D202 1N4148
R205 3K6
R206 40K2
D203 1N4148
CZ02 47uF
Q212 BC337
Q213 BC337
R207 1K
D201 12V
R240 RESISTOR
C204 47nF
K1 value
TP5
JP2
OUT
JP0
OUT
COMPANY NAME
PATHOS ACOUSTICS
MODEL
LOGOS
BOARD
LEFT CHANNEL
DATE
OCT 2005
SHEET
3

Power Amp

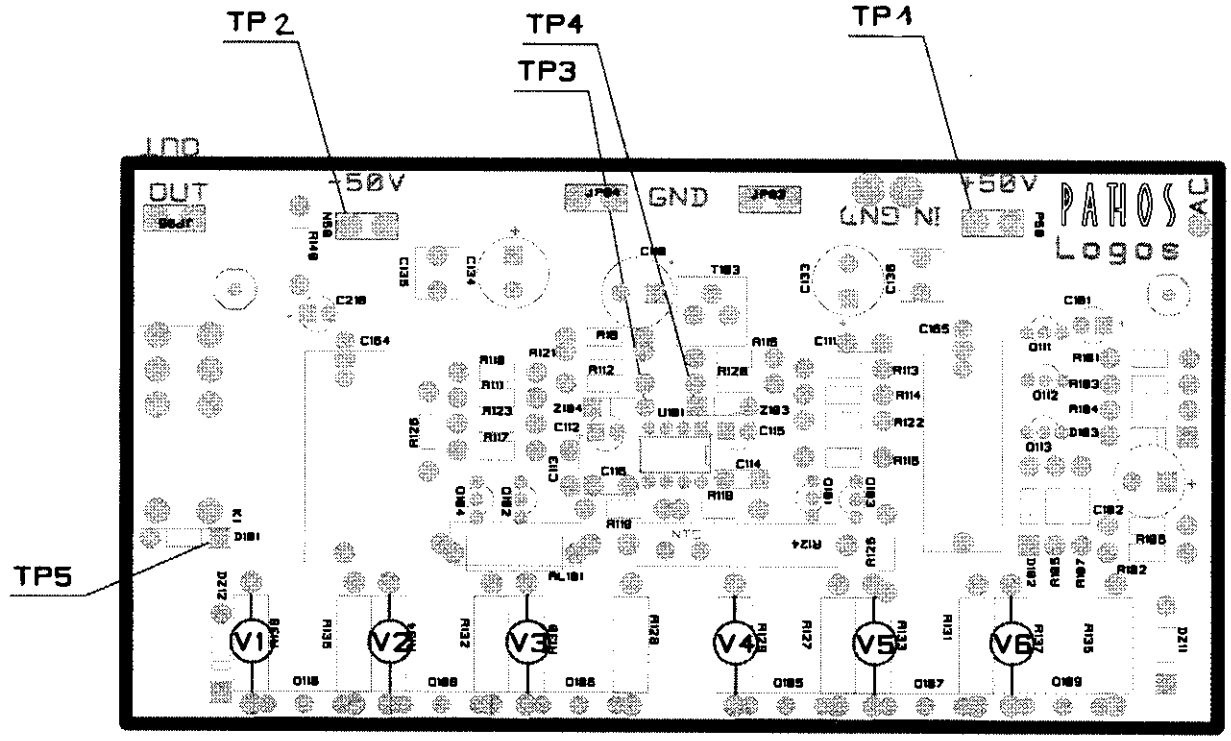
TP2
TP4
TP3
TP1
TP5
OUT
+50V
GND
GND
+50V
PATHOS
Logos
V1
V2
V3
V4
V5
V6

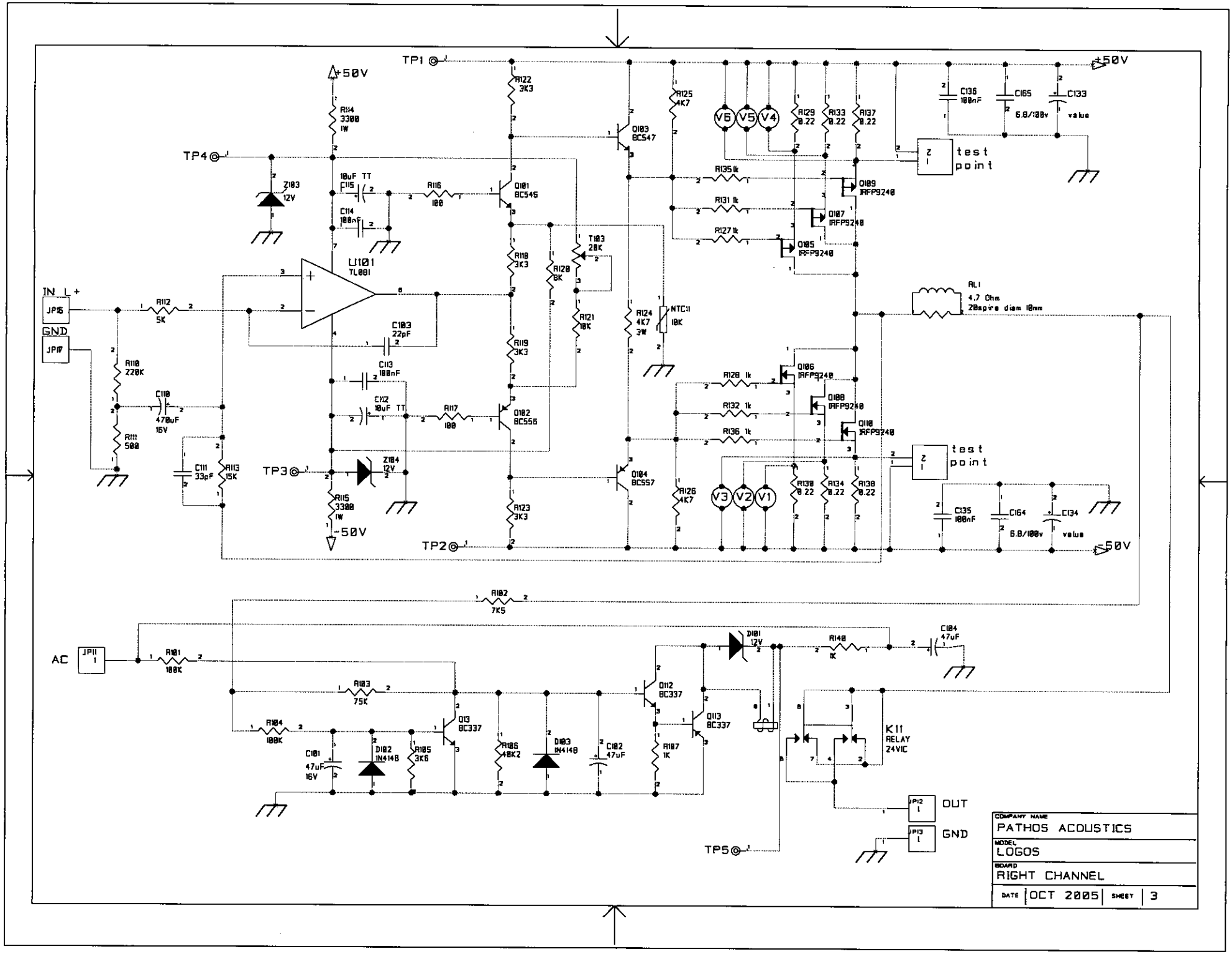
TP1
+50V
R114 3300 1W
R122 3K3
Q103 BC547
R125 4K7
V6 V5 V4
R129 0.22
R133 0.22
R137 0.22
C136 100nF
C165 6.8/100v
C133 value
+50V
TP4
Z103 12V
10uF TT C115
C114 100nF
R116 100
Q101 BC545
test point
R135 1k
Q109 IRFP9240
R131 1k
Q107 IRFP9240
R127 1k
Q105 IRFP9240
U101 TL081
R118 3K3
R120 8K
T103 20K
R121 18K
R124 4K7 3W
NTC11 10K
RL1 4.7 Ohm 20aspire diam 10mm
IN_L+
JP15
R112 5K
GND
JP17
C103 22pF
C113 100nF
R119 3K3
R110 220K
C110 470uF 16V
C112 10uF TT
R117 100
Q102 BC556
R128 1k
Q106 IRFP9240
R132 1k
Q108 IRFP9240
R136 1k
Q110 IRFP9240
R111 500
C111 33pF
R113 15K
TP3
Z104 12V
R115 3300 1W
-50V
R123 3K3
Q104 BC557
R126 4K7
V3 V2 V1
R138 0.22
R134 0.22
R130 0.22
test point
C135 100nF
C164 6.8/100v
C134 value
+50V
TP2
R102 7K5
AC
JP11
R101 100K
D101 12V
R140 1K
C104 47uF
R103 75K
Q112 BC337
Q113 BC337
R104 100K
Q3 BC337
D102 IN4148
R105 3K6
C101 47uF 16V
R106 48K2
D103 IN4148
C102 47uF
R107 1K
K11 RELAY 24VIC
JP12
OUT
JP13
GND
TP5
COMPANY NAME PATHOS ACOUSTICS
MODEL LOGOS
BOARD RIGHT CHANNEL
DATE OCT 2005 SHEET 3

Power Amp Left & Right		
Test Point	Voltage relative to ground	Bias adjustment voltage
TP1	+54,0V DC	
TP2	-54,0V DC	
TP3	-12V DC	
TP4	+12V DC	
TP5	26V DC	
V1		21-40mV DC
V2		21-40mV DC
V3		21-40mV DC
V4		21-40mV DC
V5		21-40mV DC
V6		21-40mV DC
		Adjust T 103 to reach a total bias current of about 90 [mV] / 0,22 [Ohm] = 410 [mA] That means to get about 30 mV For each resistor 0.22 Ohm V1+V2+V3= 90mV

Input selector

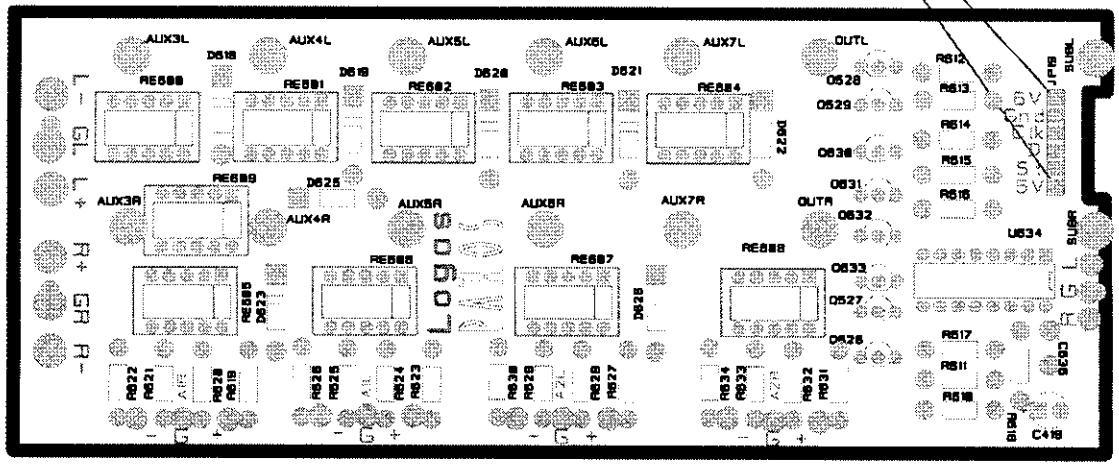

Display

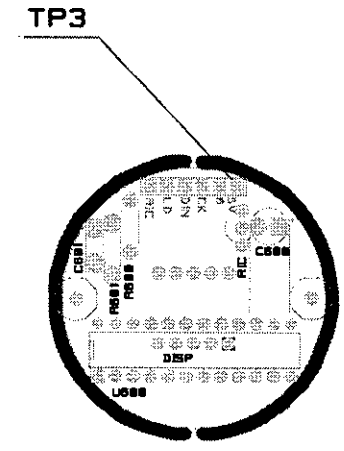

Remote control

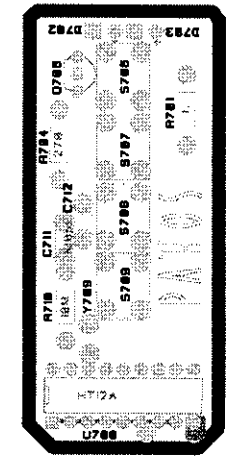

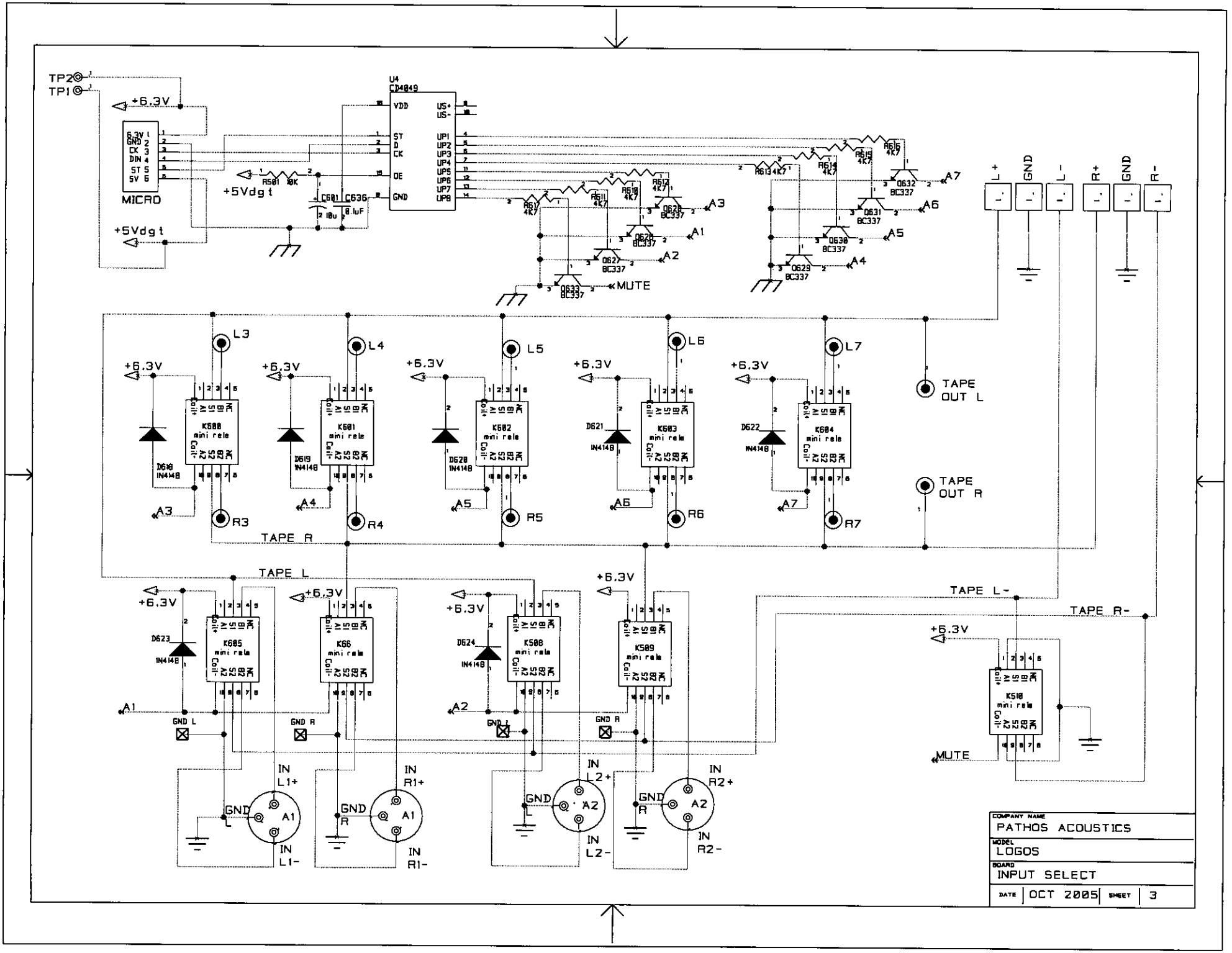
TP2
TP1
+6.3V
MICRO
+5Vdgt
R501 10K
C601 10u
C636 0.1uF
U4
CD4049
VDD
VSS
ST
D
CK
OE
GND
UP1
UP2
UP3
UP4
UP5
UP6
UP7
UP8
R611 4K7
R612 4K7
R613 4K7
R614 4K7
R615 4K7
R616 4K7
D626 BC337
D627 BC337
D628 BC337
D629 BC337
D630 BC337
D631 BC337
D632 BC337
D633 BC337
A1
A2
A3
A4
A5
A6
A7
MUTE
L+
GND
L-
R+
GND
R-
L3
L4
L5
L6
L7
K600 mini rele
K601 mini rele
K602 mini rele
K603 mini rele
K604 mini rele
D618 IN4148
D619 IN4148
D620 IN4148
D621 IN4148
D622 IN4148
R3
R4
R5
R6
R7
TAPE OUT L
TAPE OUT R
TAPE R
TAPE L
K605 mini rele
K606 mini rele
K608 mini rele
K609 mini rele
K610 mini rele
D623 IN4148
D624 IN4148
GND L
GND R
TAPE L-
TAPE R-
IN L1+
IN L1-
IN R1+
IN R1-
IN L2+
IN L2-
IN R2+
IN R2-
A1
A2
COMPANY NAME
PATHOS ACOUSTICS
MODEL
LOGOS
BOARD
INPUT SELECT
DATE
OCT 2005
SHEET
3

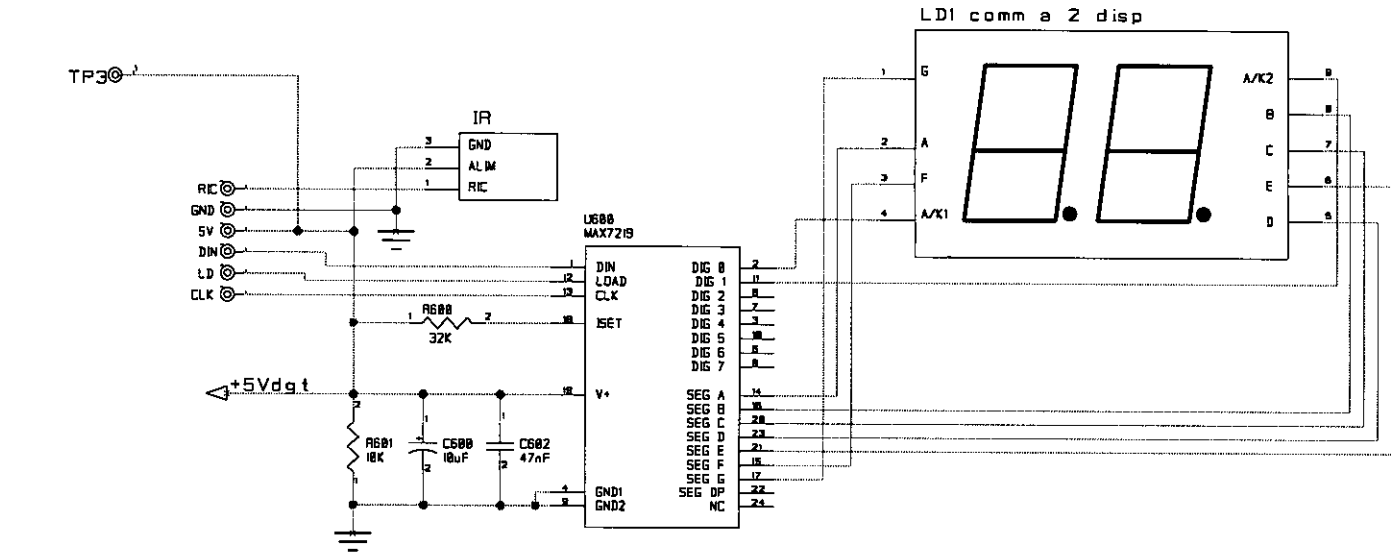

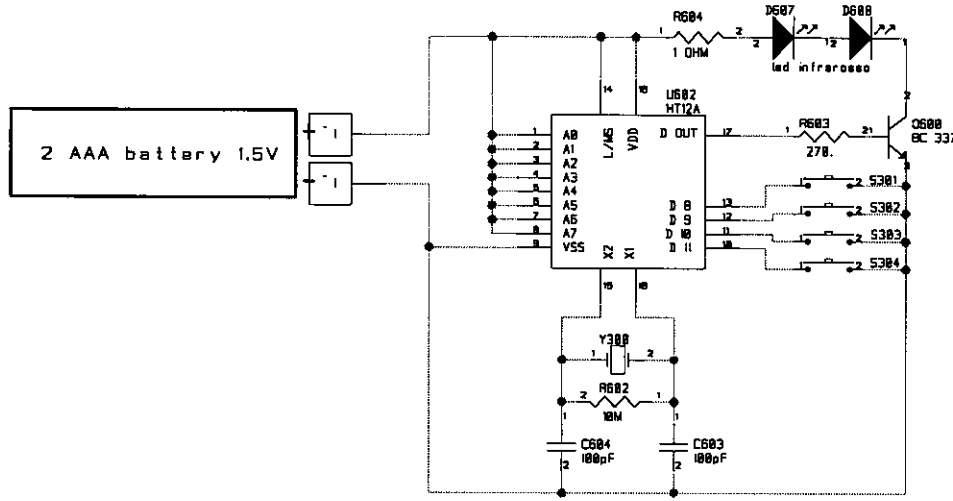

COMPANY NAME	PATHOS ACOUSTICS
MODEL	LOGOS
BOARD	DISPLAY REMOTE CONTROL
DATE	JUL 2005
SHEET	3

Input selector, Display & Remote control	
Test Point	Voltage relative to ground
TP1	5V DC
TP2	6,3V DC
TP3	5V DC