ORDER NO. ARD-7504035C

Service Manual

8-Track Stereo Deck

RS-801AUS



RS-817S MECHANISM SERIES

FOR ADDITIONAL INFORMATION, PLEASE REFER TO THE SERVICE MANUAL FOR MODEL RS-801US.

Specifications (Catalog specifications for sales)

Track system:	8-track 2-channel stereo playback	Output:	2-LINE; 0.5V/load impedance 50KΩ & over
Motor:	DC motor		
Operation:	Cartridge slide-in mechanism	Power requirement:	AC; 120V, 50/60Hz
Tape speed:	3-3/4ips.		Power consumption 20W
Wow and flutter:	0.25%	Dimensions:	7-5/8"(W)×3-7/8"(H)×9-5/8"(D)
Frequency response:	50~12,000Hz	Weight:	5-1/4lbs.
Signal to noise ratio:	45dB		

Specifications are subject to change without notice for further improvement.

Panasonic®

Matsushita Electric Corp. of America
1Panasonic Way, Secaucus, N.J. 07094

Matsushita Electric of Hawaii, Inc.
320 Waiakamilo Road, Honolulu, Hawaii 96817

www.hifiengine.com

ELECTRICAL PARTS LOCATION

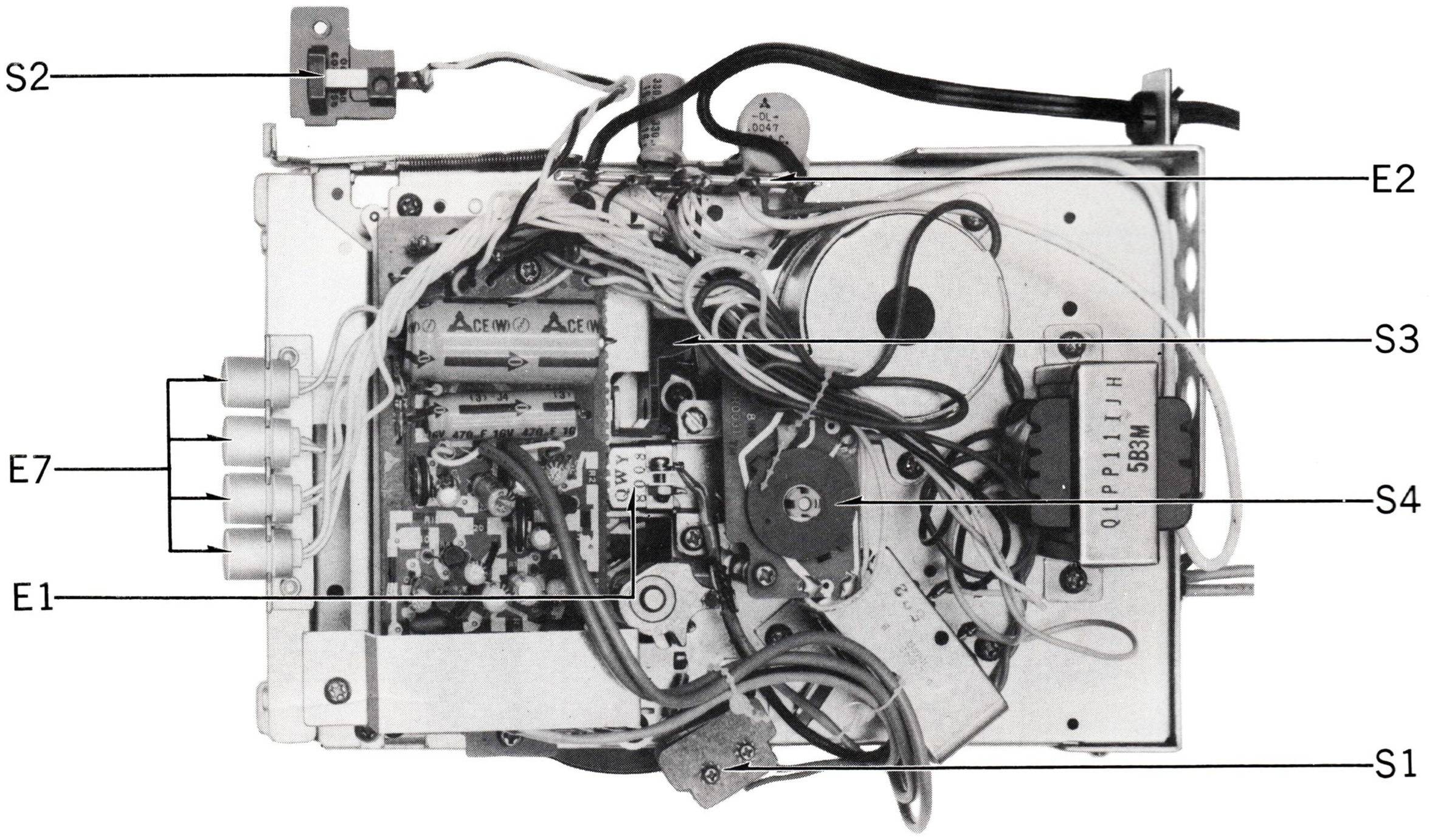

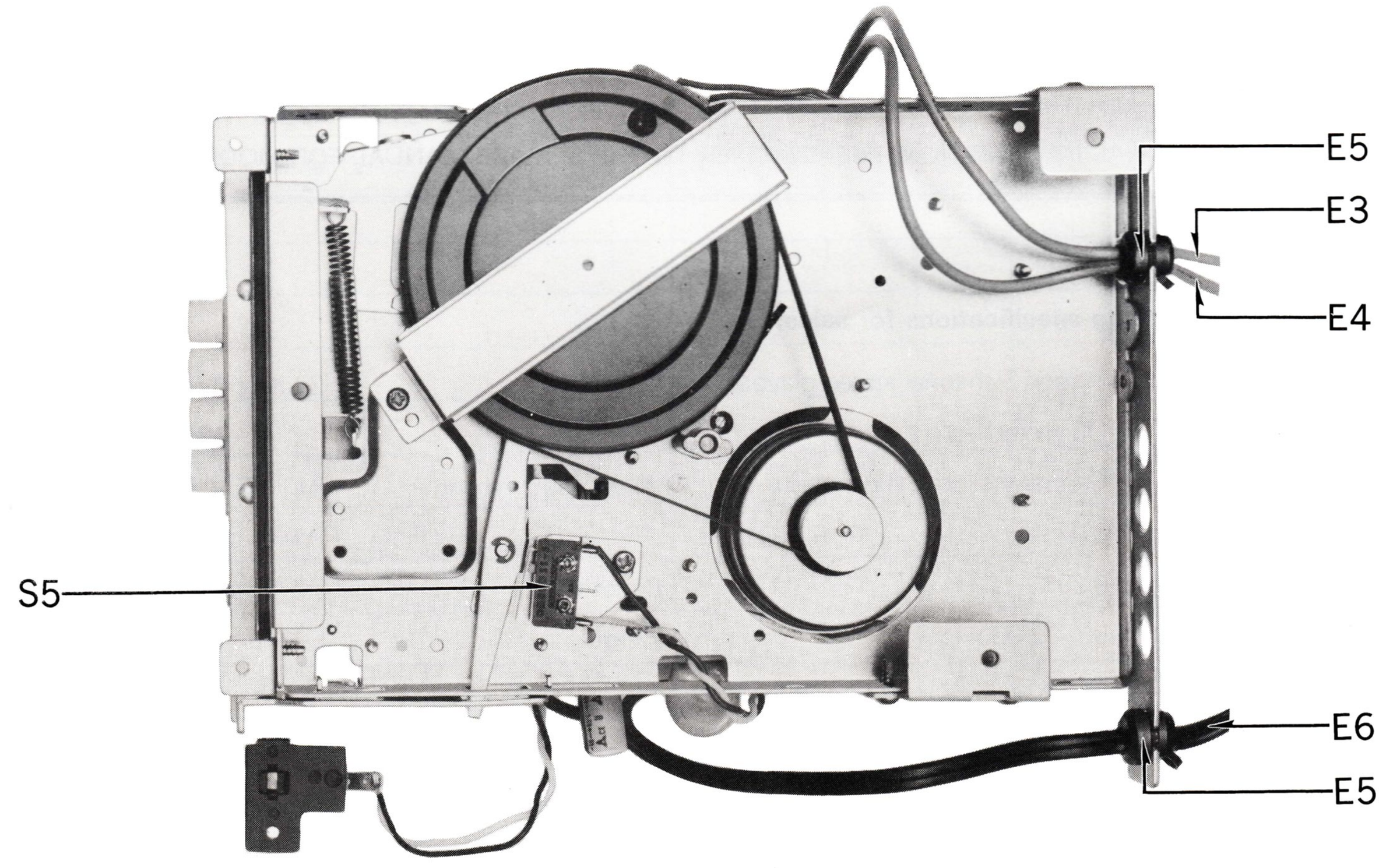

www.hifiengine.com

EXPLODED VIEWS

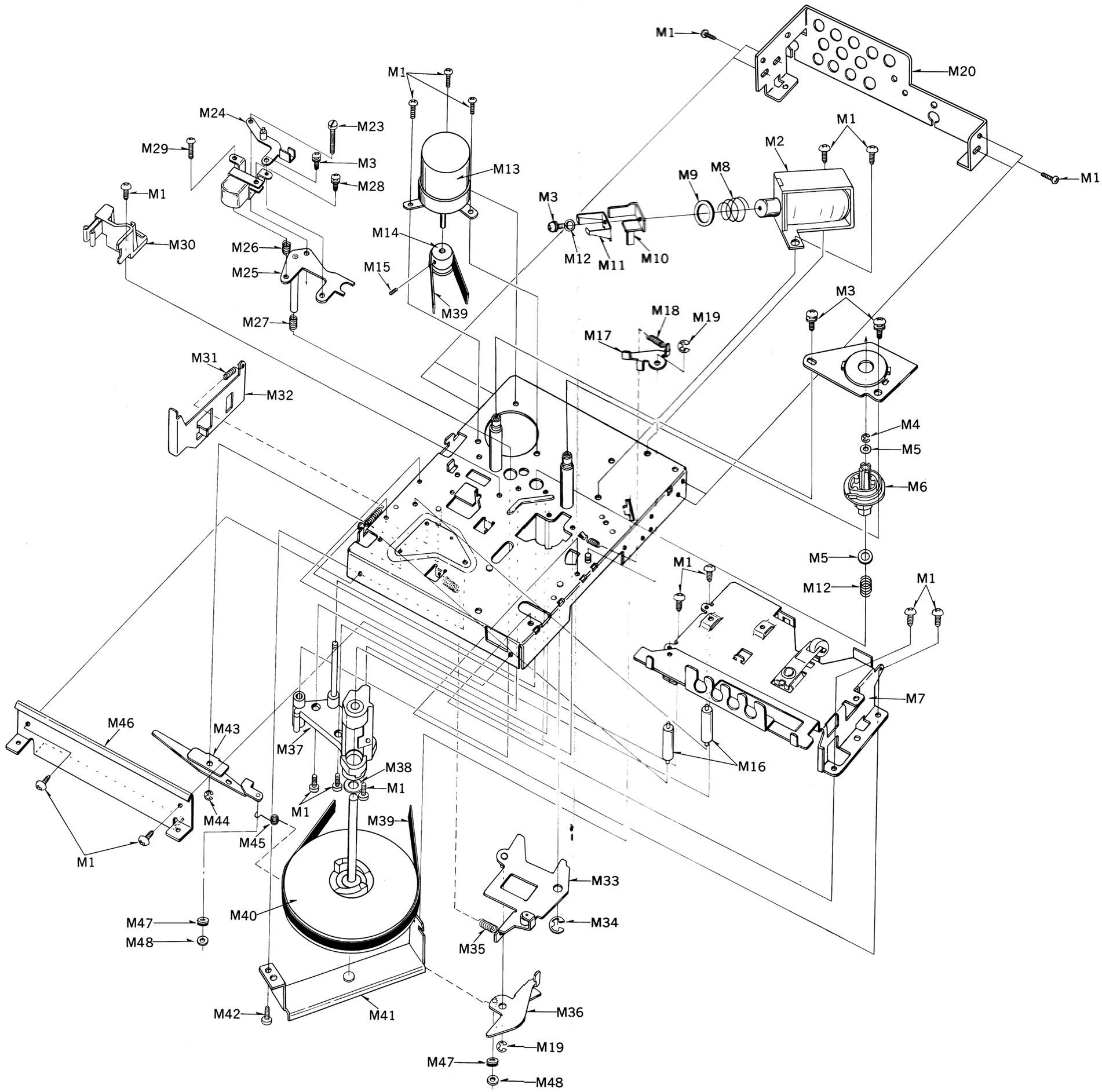

www.hifiengine.com

SCHEMATIC DIAGRAM MODEL RS-801AUS

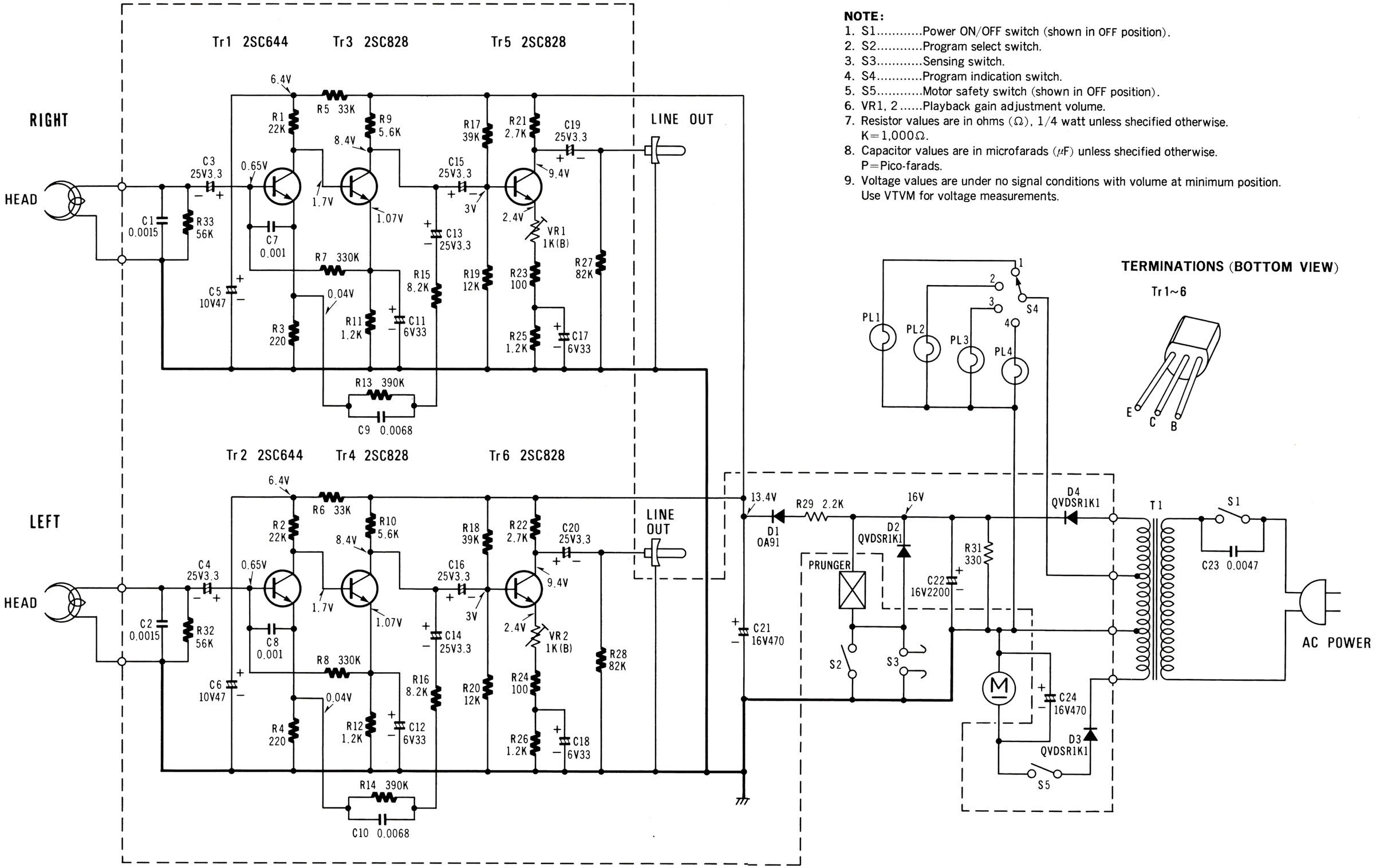

NOTE:

1. S1.....Power ON/OFF switch (shown in OFF position).
2. S2.....Program select switch.
3. S3.....Sensing switch.
4. S4.....Program indication switch.
5. S5.....Motor safety switch (shown in OFF position).
6. VR1, 2.....Playback gain adjustment volume.
7. Resistor values are in ohms (Ω), 1/4 watt unless shecified otherwise.
   K=1,000Ω.
8. Capacitor values are in microfarads (μF) unless shecified otherwise.
   P=Pico-farads.
9. Voltage values are under no signal conditions with volume at minimum position.
   Use VTVM for voltage measurements.

TERMINATIONS (BOTTOM VIEW)

Tr1~6

www.hifiengine.com

WIRING CONNECTION DIAGRAM MODEL RS-801AUS

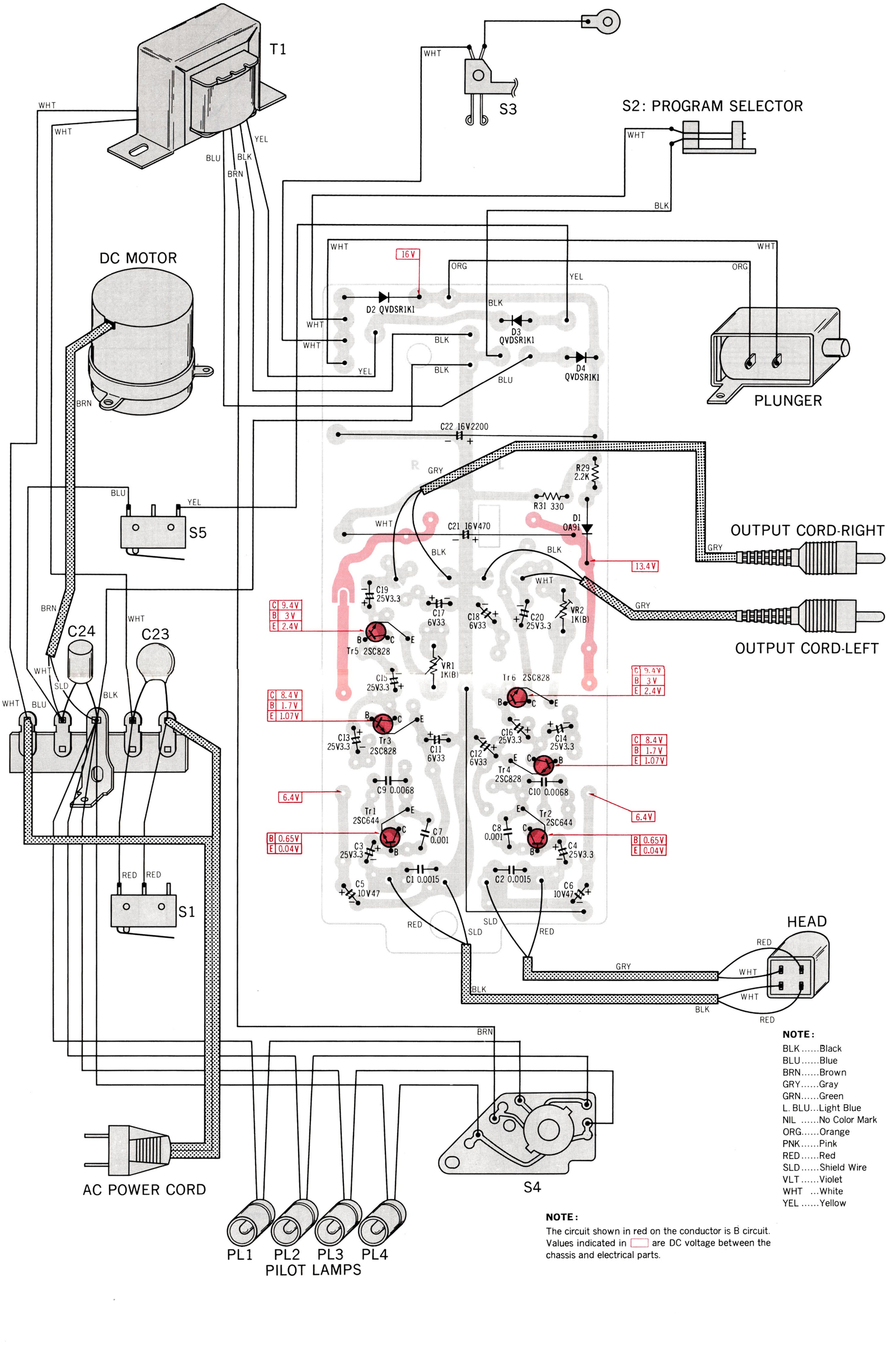

NOTE:

BLK.....Black
BLU.....Blue
BRN.....Brown
GRY.....Gray
GRN.....Green
L. BLU...Light Blue
NIL .....No Color Mark
ORG.....Orange
PNK.....Pink
RED.....Red
SLD.....Shield Wire
VLT.....Violet
WHT ...White
YEL .....Yellow

NOTE:

The circuit shown in red on the conductor is B circuit. Values indicated in ▭ are DC voltage between the chassis and electrical parts.

www.hifiengine.com