ORDER NO. RD82031969C1

Service Manual

Radio Cassette

RX-5085

FM-AM-FM Stereo Radio Cassette Recorder

■ SPECIFICATIONS

General:

Power Requirement:	AC; 110~115/115~127/200~220/230~250 V, 50/60 Hz Battery; 12 V (Eight "D" Size Flashlight Batteries) (Panasonic UM-1 or equivalent)
Power Consumption:	25 W (AC only)
Power Output:	15 W (7.5 W×2) . . . RMS (max.)
Speaker:	Woofer; 16 cm (6½") PM Dynamic Speaker (3Ω) Tweeter; 5 cm (2") PM Dynamic Speaker (4Ω)
Input:	MIC; sensitivity 0.25 mV/applicable microphone impedance 200~600Ω Line in; sensitivity 200 mV/50 kΩ over
Output:	Line out; sensitivity 0.36 V/10 kΩ under Ext SP; 3Ω~8Ω Headphones; 8Ω
Dimensions:	534 mm(W)×265 mm(H)×178 mm(D) (20¾×10 7/16×7)"
Weight:	5.7 kg (12 lb. 9 oz.) without batteries

Radio Section:

Radio Frequency Range:	FM; 88~108 MHz AM; 525~1610 kHz
Intermediate Frequency:	FM; 10.7 MHz AM; 455 kHz
Sensitivity:	FM; 2μV/50 mW output AM; 71μV/m/50 mW output

Tape Deck Section:

Frequency Response:	40~12,000 Hz (with normal tape) 40~14,000 Hz (with CrO_2 tape) 40~16,000 Hz (with Metal tape)
Recording system:	AC bias, AC erase
Tape Speed:	4.8 cm/s, (1⅞ ips)
Wow and Flutter:	0.08% (WRMS)
Program Time:	1 hour with C-60 cassette tape
Track System:	4-track 2 channel stereo recording and playback

Specifications are subject to change without notice.

Panasonic®

Panasonic Company
Division of Matsushita Electric Corporation of America
One Panasonic Way, Secaucus, New Jersey 07094

Panasonic Hawaii Inc.
91-238 Kauhi St. Ewa Beach
P.O. Box 774
Honolulu, Hawaii 96808-0774

Panasonic Canada
Division of Matsushita Electric of Canada Limited
5770 Ambler Drive, Mississauga, Ontario, L4W 2T3

Panasonic Sales Company, Division of Matsushita Electric of Puerto Rico, Inc.
Ave. 65 De Infanteria, KM 9.7
Victoria Industrial Park
Carolina, Puerto Rico 00630

LOCATION OF CONTROLS AND COMPONENTS

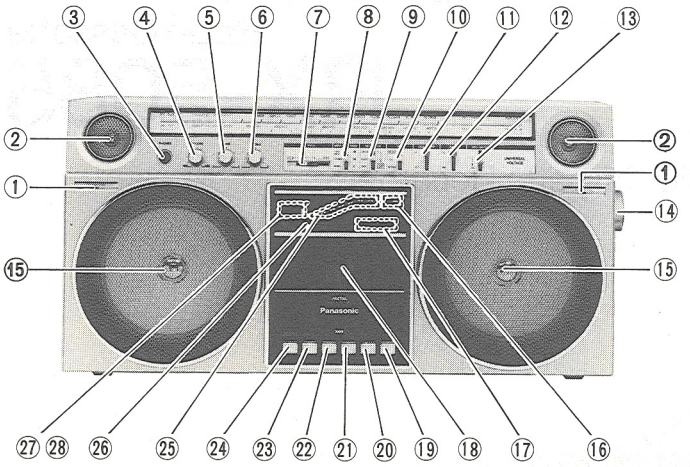

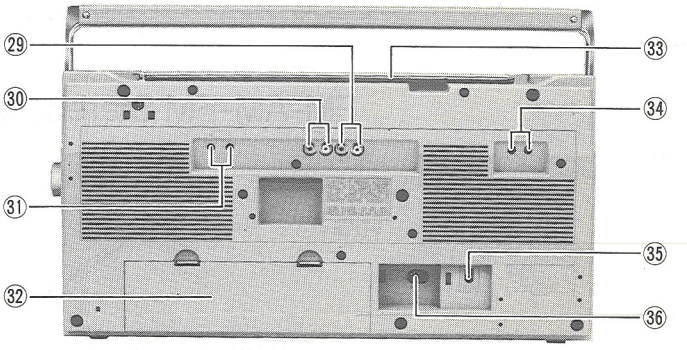

DOLBY SYSTEM

*"Dolby" and the double-D symbol are trademarks of Dolby Laboratories Licensing Corporation.
*Noise reduction system manufactured under license from Dolby Laboratories Licensing Corporation.

① Built-in Microphones (MICROPHONE)
② Tweeters (Treble Speakers) 5 cm (2"), 4Ω
③ Headphone Jack (PHONES) 8Ω
④ Volume Control (VOLUME)
⑤ Bass Control (BASS)
⑥ Treble Control (TREBLE)
⑦ Balance Control (BALANCE)
⑧ Mode Selector/Beat Proof Switch (AMBIENCE, II/STEREO, II/MONO, I)
⑨ Function Selector (LINE IN/RADIO/TAPE, POWER OFF)
⑩ Tape Selector (METAL/CrO_2/NORMAL)
⑪ Dolby Noise Reduction Switch (DOLBY NR)
⑫ Band Selector (BAND) (FM/AM)
⑬ Record Muting Button (REC MUTE)
⑭ Tuning Control (TUNING)
⑮ Woofers (Bass Speakers) 16 cm (6½"), 3Ω
⑯ FM Stereo Indicator (FM STEREO)
⑰ Tape Counter and Reset Button (COUNTER)
⑱ Cassette Compartment
⑲ Pause Button (PAUSE)
⑳ Stop/Eject Button (STOP/EJECT)
㉑ Playback Button (PLAY)
㉒ Fast Forward Button (FF)
㉓ Rewind Button (REWIND)
㉔ Record Button (RECORD)
㉕ Level Meter (LEVEL)
㉖ Power/Battery Check Indicator (POWER/BATT)
㉗ Dolby Noise Reduction Indicator (DOLBY NR)
㉘ Tape Program Sensor (TPS) Indicator
㉙ Line Output Jacks (LINE OUT) 0.36 V/10 kΩ under
㉚ Line Input Jacks (LINE IN) 200 mV/50 kΩ over
㉛ Microphone Jacks (MIC) 0.25 mV/200~600Ω
㉜ Battery Compartment
㉝ Telescopic Antenna
㉞ External Speaker Jacks [EXT SP IMP (3~8Ω)]
㉟ Voltage Selector (VOLTAGE SELECTOR)
㊱ AC Socket (AC IN ~)

DISASSEMBLY INSTRUCTIONS

Procedure	To remove—.	Remove	Shown in Fig.—.
1	Cassette Compartment	Screw (RHE5040Z) ..... (A)×2	1
2	Front Cabinet	Knob ..... (B)×11	1
3		Screw (3×40) ..... (C)×7	2
4	Mechanism	Dial Scale ..... (D)×1	3
5		Screw (3×12) ..... (E)×3	3
6	Circuit Board	Screw (3×12) ..... (F)×6	4
7		Connector ..... (G)×5	3
8	Handle	Screw (3×8) ..... (H)×2	5
9		Handle Holding ..... (I)×2	5
10	Dial Chassis	Screw (26×8) ..... (J)×1	6
11		Screw (3×6) ..... (K)×4	6

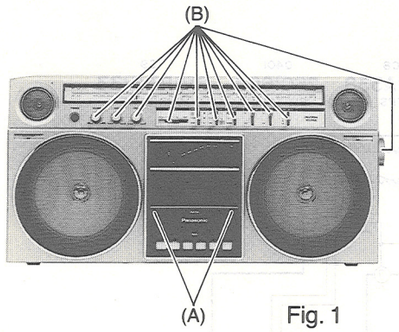

Fig. 1

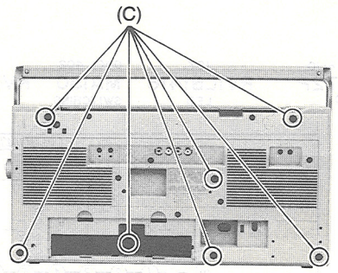

Fig. 2

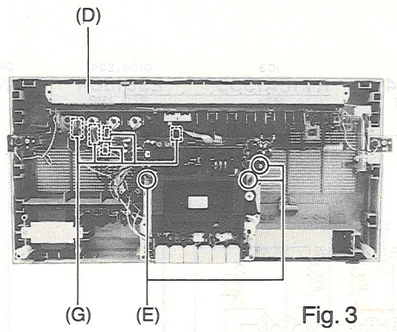

Fig. 3

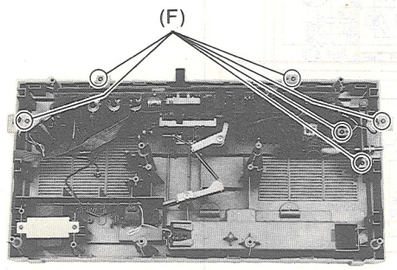

Fig. 4

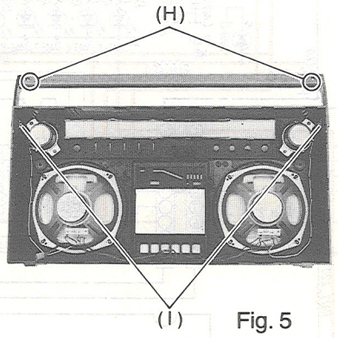

Fig. 5

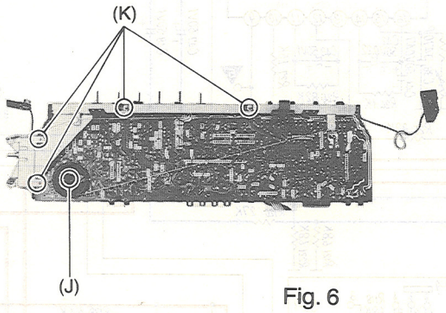

Fig. 6

DIAL THREADING

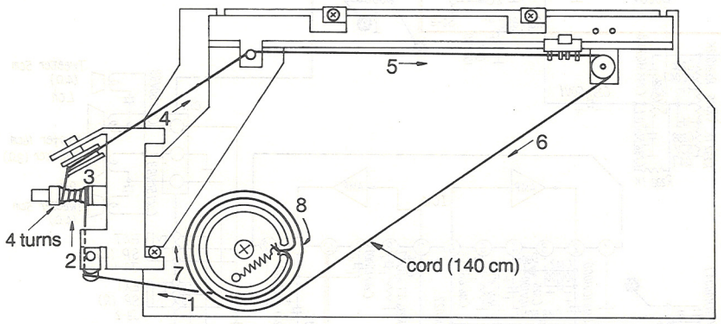

Fig. 7

IC5, 6 RVILM1112BN

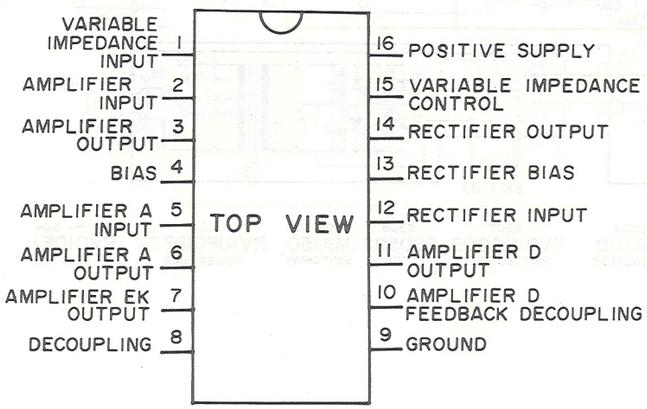

IC BLOCK

IC7 RVILB1416

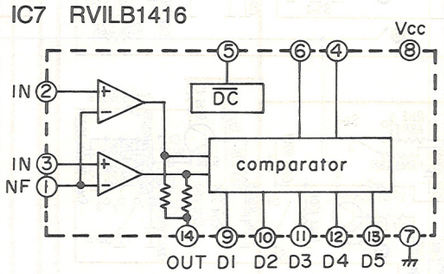

IC8 RVIBA338

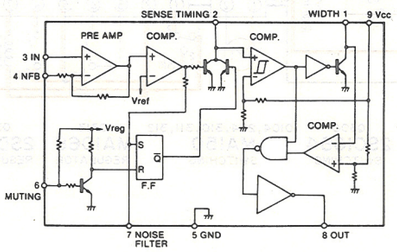

IC2 AN7223

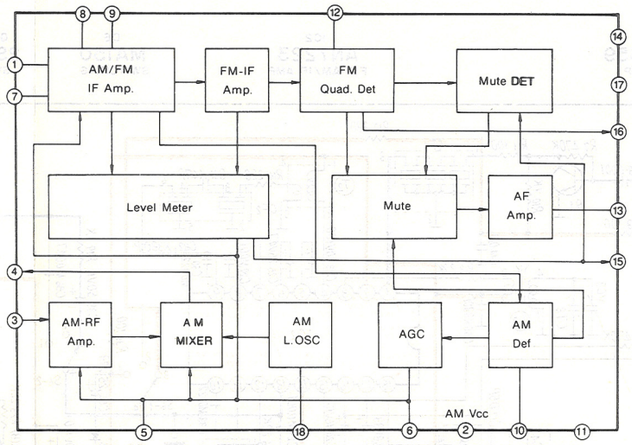

IC3 RVIBA1355

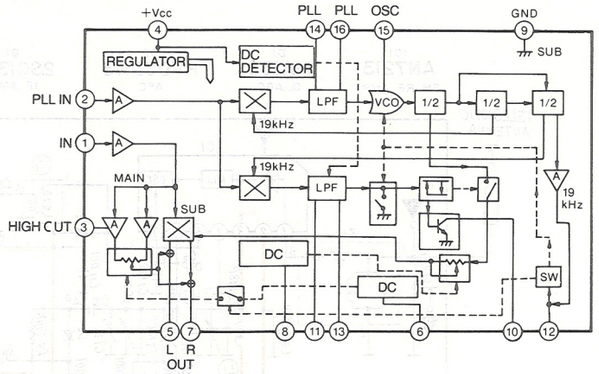

IC9 RVIBA6133

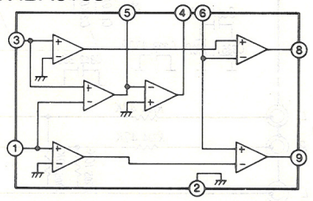

■ ALIGNMENT POINTS

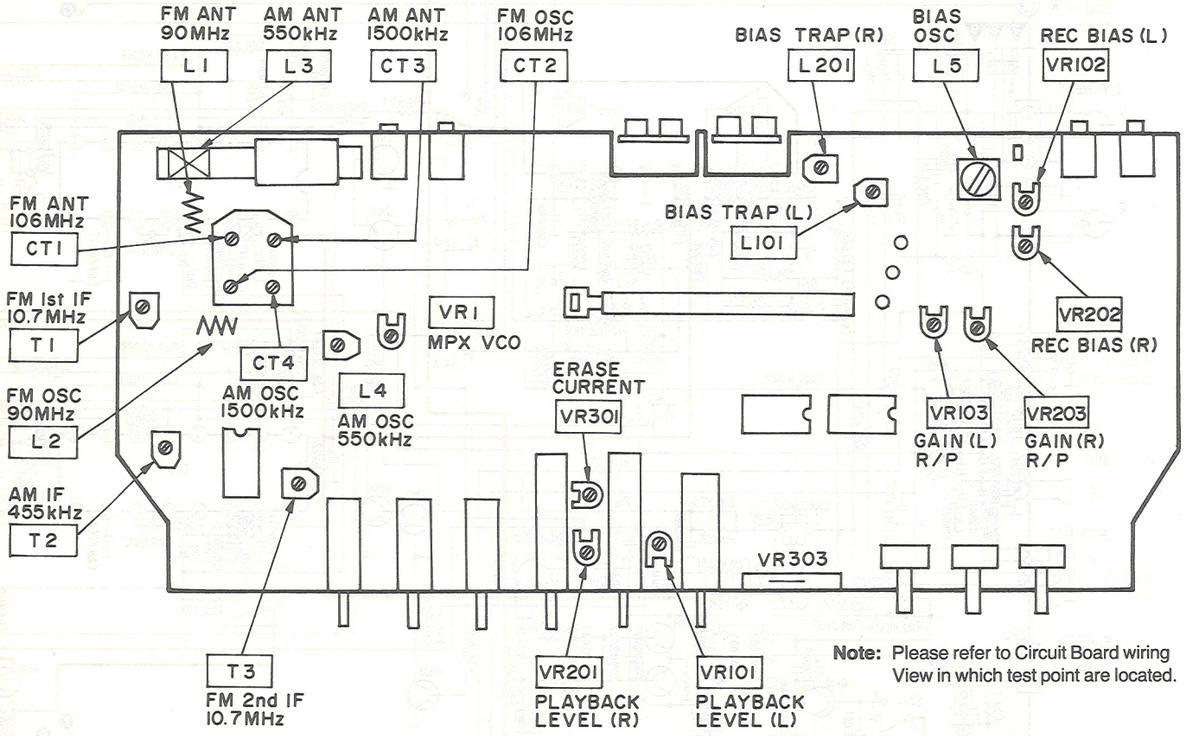

Note: Please refer to Circuit Board wiring View in which test point are located.

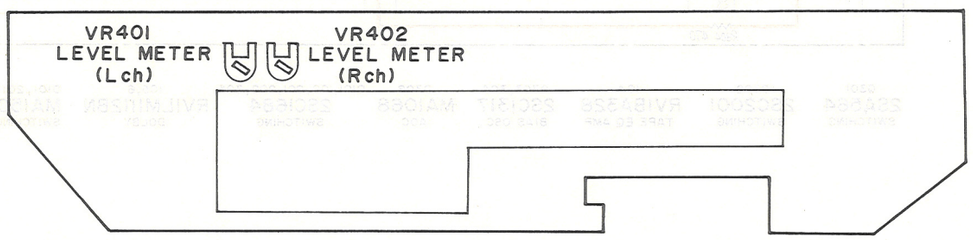

Fig. 8

SCHEMATIC DIAGRAM MODEL RX-5085

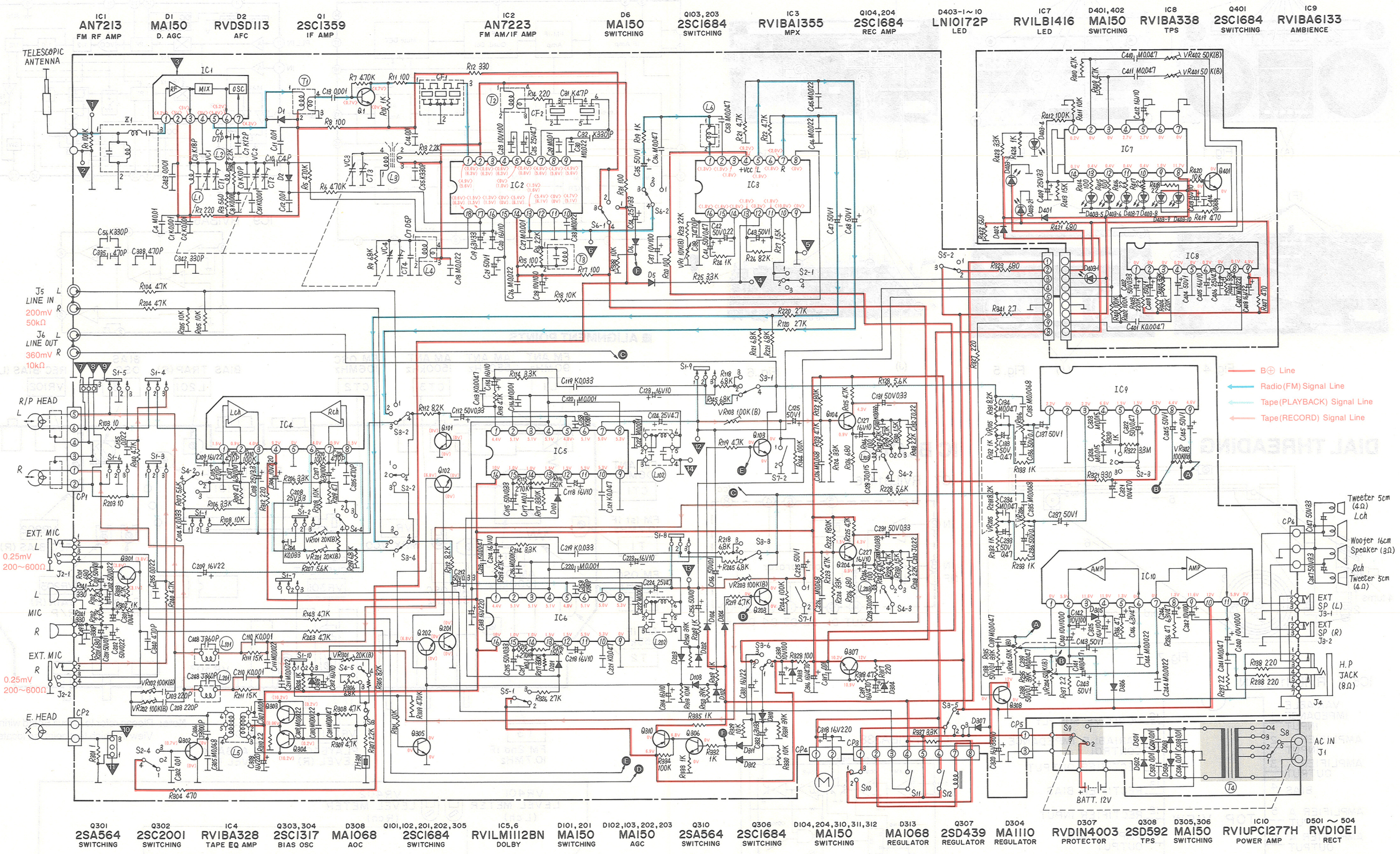

	SIGNAL GENERATOR or SWEEP GENERATOR		RADIO DIAL SETTING [DISTANCE]	INDICATOR (ELECTRONICS VOLTMETER or SCOPE)	ADJUSTMENT	REMARKS
	CONNECTIONS	FREQUENCY				
	FM-IF ALIGNMENT					
(4)	Connect to test point ▼ through 0.001 μF. Negative side to test point ▼.	10.7 MHz (SWP.)	Point of non-interference. (on/ about 90 MHz)	Connect vert. amp. of scope to test point ▼. Negative side to test point ▼.	T1 (FM 1st IFT)	Adjust for maximum amplitude. (Refer to fig. 9.)
(5)	,,	,,	,,	,,	T3 (FM 2nd IFT)	Adjust for maximum amplitude. (Refer to fig. 10.)
	FM-RF ALIGNMENT					
(6)	Connect to test point ▼ through FM dummy antenna. Negative side to test point ▼.	90 MHz	90 MHz [31.1 mm (1 7/32")]	Output meter across speaker voice coil.	L2 (FM OSC Coil) L1 (FM ANT Coil)	Adjust for maximum output.
(7)	,,	106 MHz	106 MHz [159.0 mm (6 1/4")]	,,	CT2 (FM OSC Trimmer) CT1 (FM ANT Trimmer)	Adjust for maximum output. Repeat steps (6) and (7).

■ SEPARATION ALIGNMENT

ITEM	FM SIGNAL GENERATOR SOURCE CONNECTION	EQUIPMENT CONNECTION ELECTRONIC COUNTER	ADJUSTMENT	SPECIFICATION	REMARKS
Adjustment of pilot signal.	90 MHz, 60 dB (CW)	▼ . . . (+) side ▼ . . . (−) side	VR1	19 kHz	Adjust VR1, for 19 kHz (±150 Hz) reading on electronics counter.

■ AUDIO ALIGNMENT

ITEM	INPUT	MEASUREMENT POINT	SPECIFICATION	ADJUSTMENT POINT	REMARKS
Azimuth	QZZCFM (10 kHz, −20 dB)	LINE OUT	Maximum output.	Azimuth screw	Playback mode
Playback level	QZZCFM (315 Hz, 0 dB)	,,	0.31±0.1 V	VR101 (Lch) VR201 (Rch)	Playback mode Tape selector→Normal'
LED meter	QZZCFM (315 Hz, 0 dB)	LED meter	——	VR401 (Lch) VR402 (Rch)	Playback mode Tape selector→Normal Adjust VR401 & VR402 so that the 3rd LED from right begins to fade out.
Bias oscillation frequency	——	▼ . . . (+) ▼ . . . (−)	67.5±0.3 kHz	L5	Record mode Beat proof switch→I
Erase current	Use metal tape	,,	140±10 mV	VR301	Record mode Beat proof switch→I Tape selector→Metal
Bias trap	——	▼ (Lch) ▼ (Rch) ▼ . . . (−)	Maximum Output	L101 (Lch) L201 (Rch)	Record mode Beat proof switch . . . I→II
Bias current	Use metal tape	,,	Metal 7.5~8.0 mV CrO_2 4.9~5.9 mV Normal 3.1~4.4 mV	Metal VR102 (Lch) VR202 (Rch)	Record mode Beat proof switch→II Tape selector→Metal, Normal
Overall gain	LINE IN (1 kHz, −34 dB)	▼ (Lch) ▼ (Rch) ▼ . . . (−)	26~30 mV	VR103 (Lch) VR203 (Rch)	1. Record the signal (1 kHz/−34 dB). 2. Playback the recorded tape and make sure the value at line output becomes 26~30 mV.

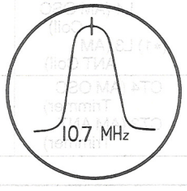

Fig. 9

Fig. 10

BLOCK DIAGRAM

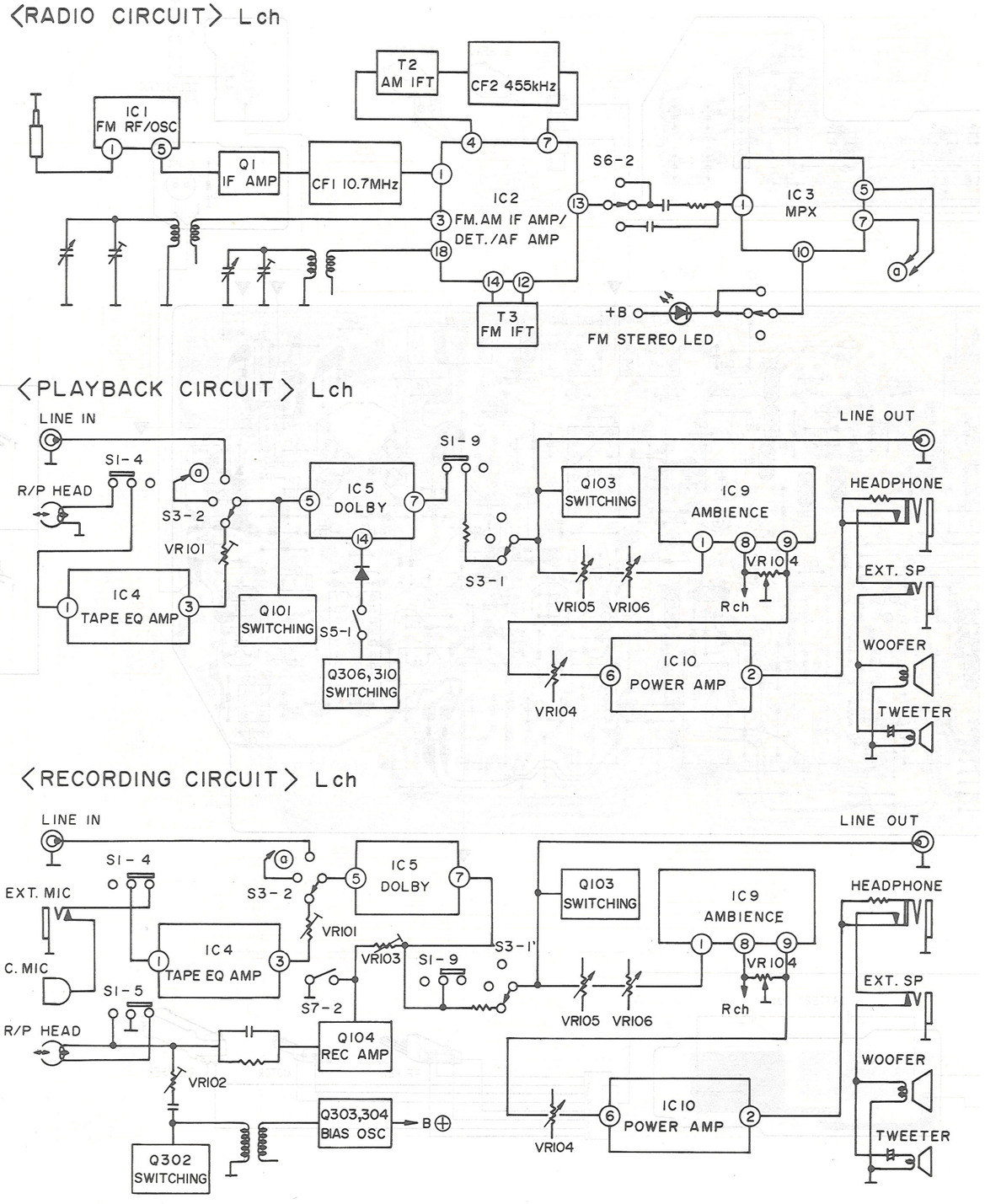

Fig. 11

MECHANISM PARTS LOCATION

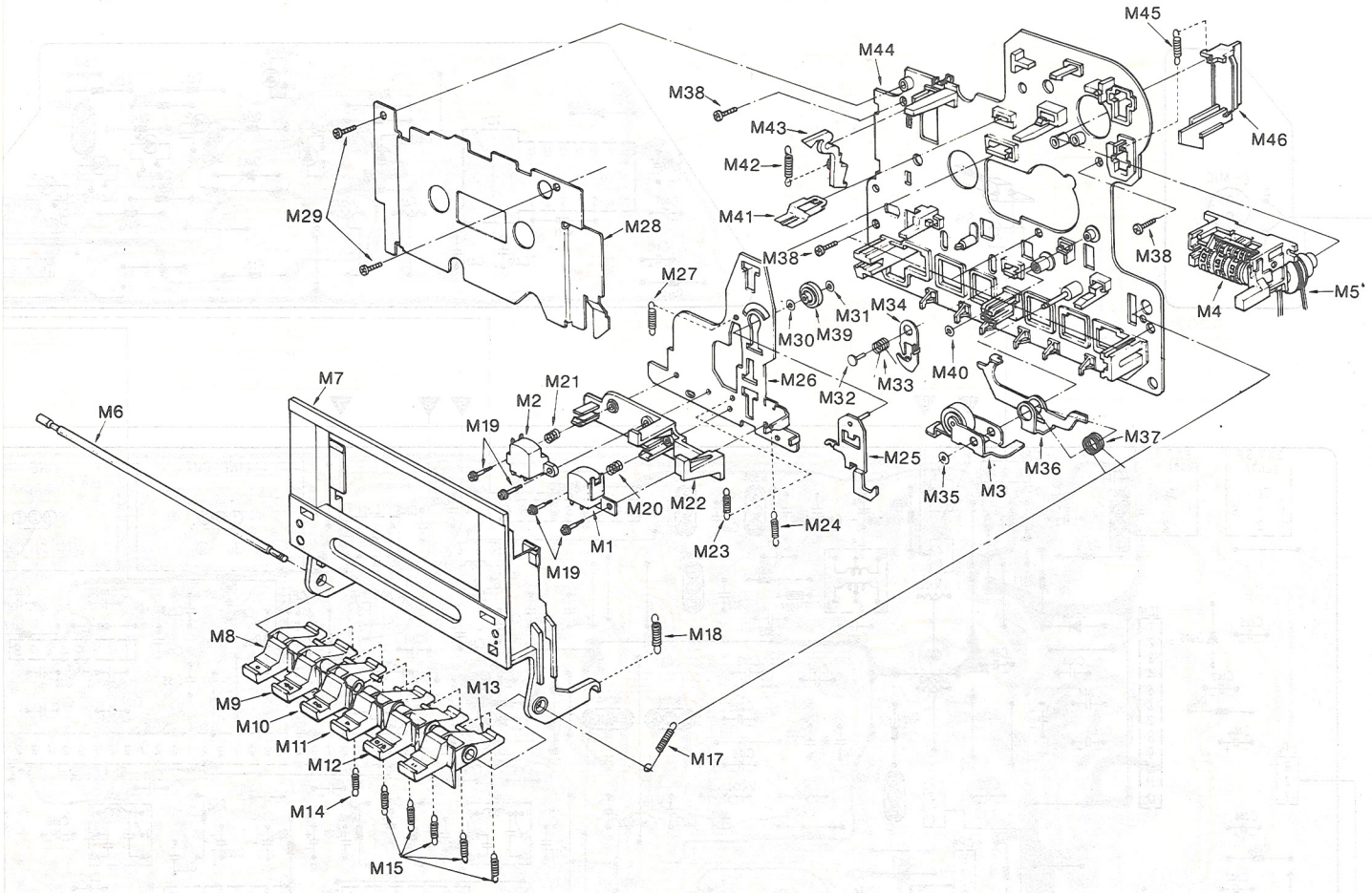

Fig. 12

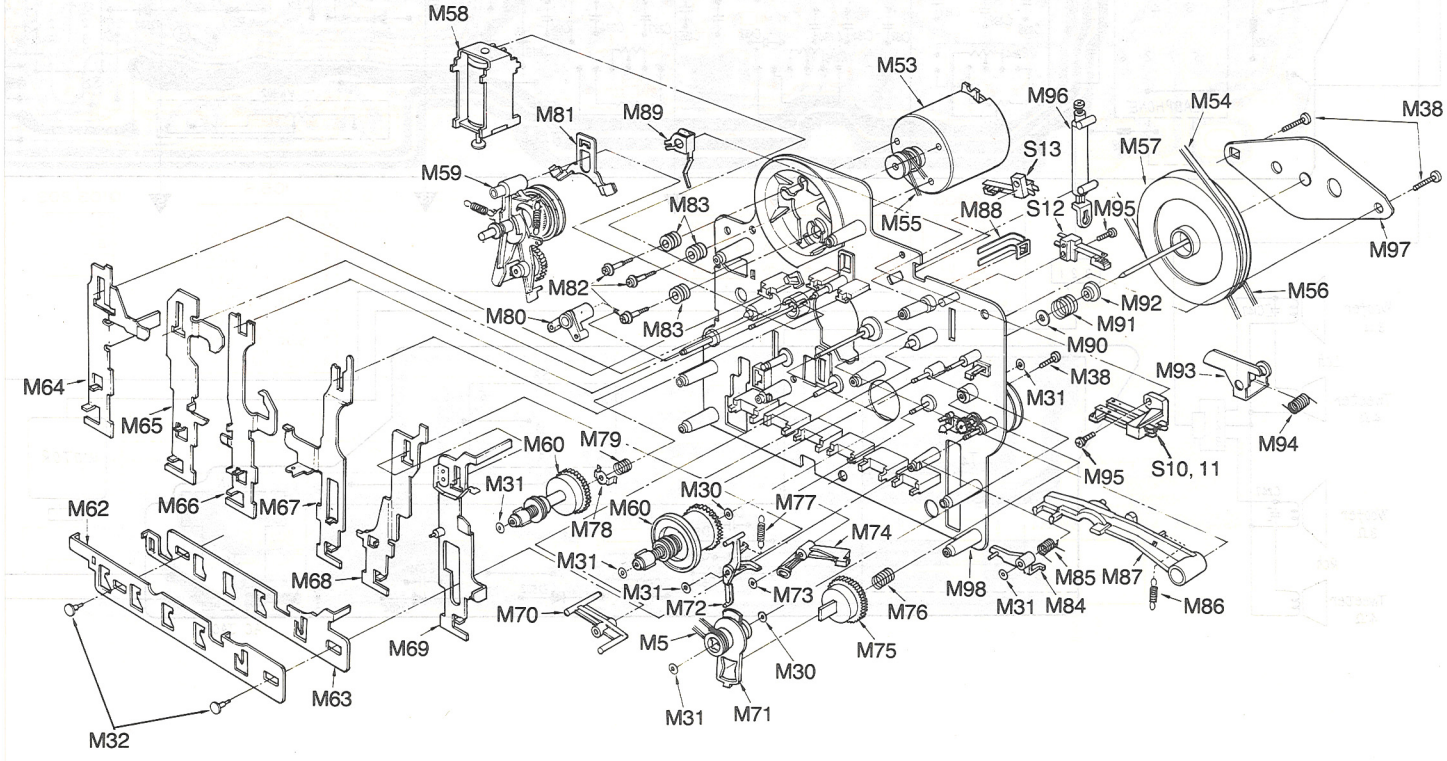

Fig. 13

CIRCUIT BOARD AND WIRING CONNECTION DIAGRAM MODEL RX-5085

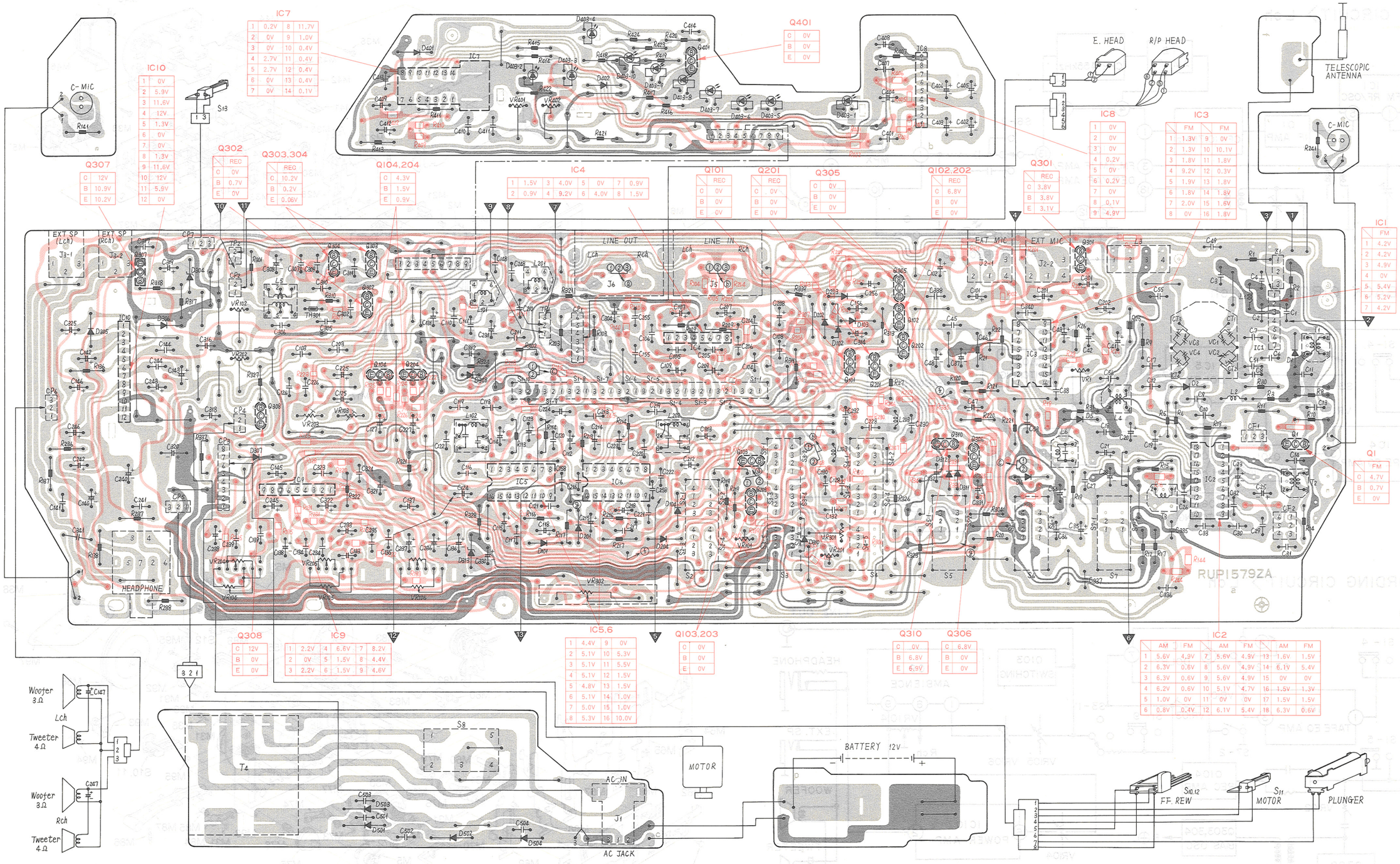

IC7

1	0.2V	8	11.7V
2	0V	9	1.0V
3	0V	10	0.4V
4	2.7V	11	0.4V
5	2.7V	12	0.4V
6	0V	13	0.4V
7	0V	14	0.1V

IC10

1	0V
2	5.9V
3	11.6V
4	12V
5	1.3V
6	0V
7	0V
8	1.3V
9	11.6V
10	12V
11	5.9V
12	0V

Q401

C	0V
B	0V
E	0V

Q302

	REC
C	0V
B	0.7V
E	0V

Q303,304

	REC
C	10.2V
B	0.2V
E	0.06V

Q307

C	12V
B	10.9V
E	10.2V

Q104,204

C	4.3V
B	1.5V
E	0.9V

IC4

1	1.5V	3	4.0V	5	0V	7	0.9V
2	0.9V	4	9.2V	6	4.0V	8	1.5V

Q101

	REC
C	0V
B	0V
E	0V

Q201

	REC
C	0V
B	0V
E	0V

Q305

C	0V
B	0V
E	0V

Q102,202

	REC
C	6.8V
B	0V
E	0V

Q301

	REC
C	3.8V
B	3.8V
E	3.1V

IC8

1	0V
2	0V
3	0V
4	0.2V
5	0V
6	0.2V
7	0V
8	0.1V
9	4.9V

IC3

	FM		FM
1	1.3V	9	0V
2	1.3V	10	10.1V
3	1.8V	11	1.8V
4	9.2V	12	0.3V
5	1.9V	13	1.8V
6	1.8V	14	1.8V
7	2.0V	15	1.6V
8	0V	16	1.8V

IC1

	FM
1	4.2V
2	4.2V
3	4.9V
4	0V
5	5.4V
6	5.2V
7	4.2V

Q1

	FM
C	4.7V
B	0.7V
E	0V

Q308

C	12V
B	0V
E	0V

IC9

1	2.2V	4	6.6V	7	8.2V
2	0V	5	1.5V	8	4.4V
3	2.2V	6	1.5V	9	4.6V

IC5,6

1	4.4V	9	0V
2	5.1V	10	5.3V
3	5.1V	11	5.5V
4	5.1V	12	1.5V
5	4.8V	13	1.5V
6	5.1V	14	1.0V
7	5.0V	15	1.0V
8	5.3V	16	10.0V

Q103,203

C	0V
B	0V
E	0V

Q310

C	0V
B	6.8V
E	6.9V

Q306

C	6.8V
B	0V
E	0V

IC2

	AM	FM		AM	FM		AM	FM
1	5.6V	4.9V	7	5.6V	4.9V	13	1.6V	1.5V
2	6.3V	0.6V	8	5.6V	4.9V	14	6.1V	5.4V
3	6.3V	0.6V	9	5.6V	4.9V	15	0V	0V
4	6.2V	0.6V	10	5.1V	4.7V	16	1.5V	1.3V
5	1.0V	0V	11	0V	0V	17	1.5V	1.5V
6	0.8V	0.4V	12	6.1V	5.4V	18	6.3V	0.6V

Notes:
1. S1
2. S2
3. S3
4. S4
5. S5
6. S6
7. S7
8. S8
9. S1
10. S1
11. S1
12. VF
13. VF
14. VF
15. VF

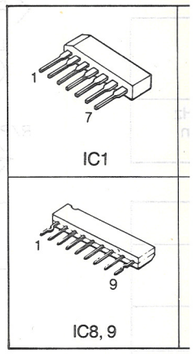

■ ALIGN

	1. S				
	2. S				
	3. S				
	4. S				
	5. S				
	CC				
(1)	Fa sev wir sig rec				
(2)					
(3)					
	(*1) (				

NG CONNECTION DIAGRAM MODEL RX-5085

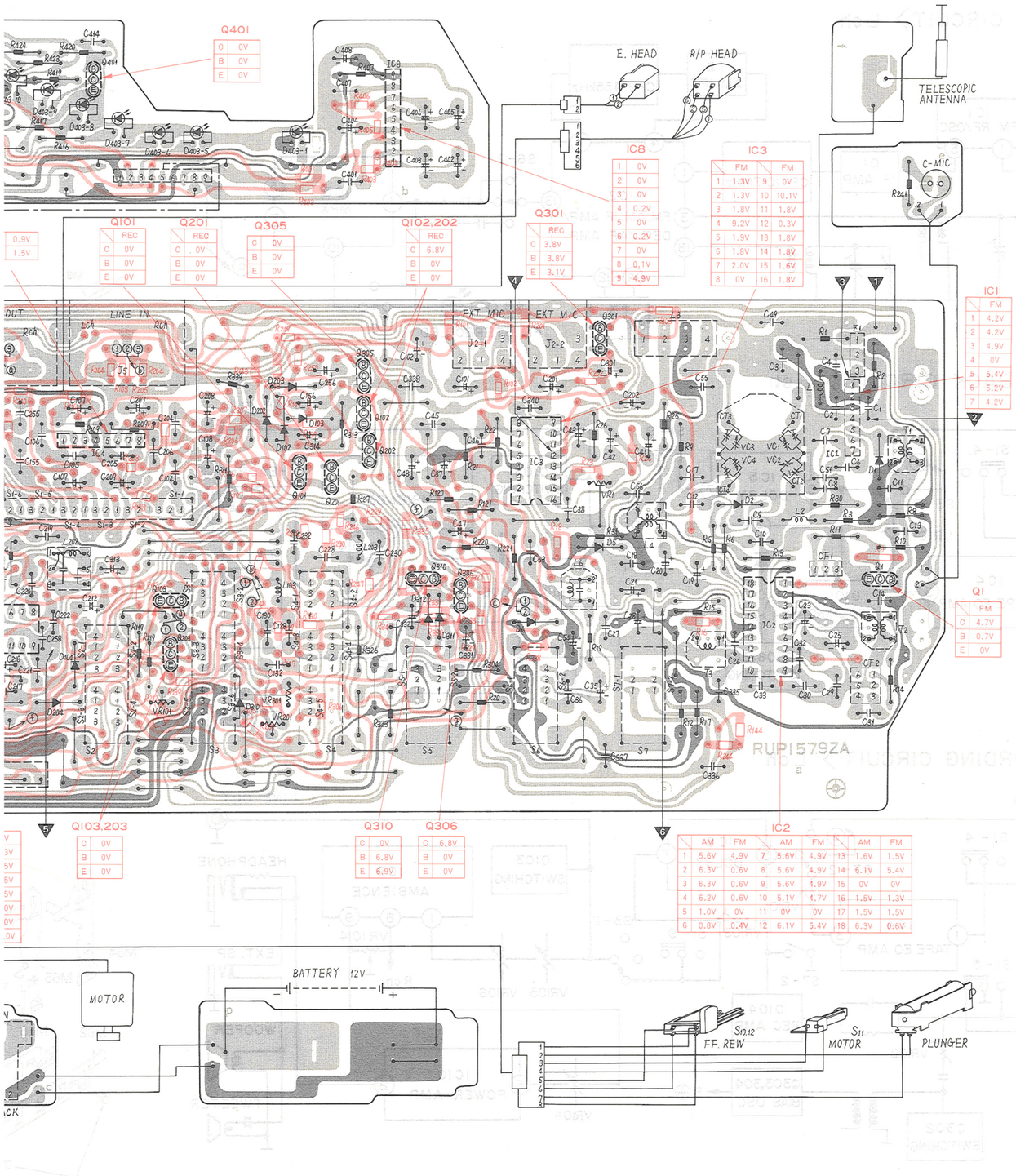

Notes:

1. S1-1~1-10 Record/playback switch in "playback" position.
2. S2-1~2-4 Mode/beat proof switch in "STEREO/I" position. (2 . . . STEREO/II, 3 . . . MONO/I, 4 . . . AMBIENCE/II)
3. S3-1~3-6 Function switch in "TAPE" position. (2 . . . RADIO, 3 . . . TAPE, 4 . . . LINE)
4. S4-1~4-5 Tape select switch in "NORMAL" position. (1 . . . NORMAL, 3 . . . CrO_2, 4 . . . METAL)
5. S5-1, 5-2 Dolby IN/OUT switch in "OUT" position.
6. S6-1, 6-2 Band switch in "FM" position. (1 . . . FM, 3 . . . AM)
7. S7-1, 7-2 Rec mute ON/OFF switch in "OFF" position.
8. S8 Voltage select switch.
9. S10, 12 Play ON/OFF switch in "OFF" position. Motor ON/OFF switch in "OFF" position.
10. S11 FF, rewind ON/OFF switch in "OFF" position.
11. S13 Muting switch in "STOP" position. (1 . . . Stop, 2 . . . Play)
12. VR1 VCO oscillator frequency adjust VR.
13. VR101, 201 Playback gain adjustment VR.
14. VR102, 202 Bias current adjustment VR.
15. VR103, 203 Recording level adjustment VR.
16. VR104, 204 Volume control VR.
17. VR105, 205 Bass control VR.
18. VR106, 206 Treble control VR.
19. VR301 Erase Current adjustment VR.
20. VR302 Balance control VR.
21. VR401, 402 LED meter adjustment VR.
22. The mark (▼) shows test point e.g. ▼=test point 1.
23. DC voltage measurement are taken with electronics voltmeter from negative terminal of battery.
    < > . . . FM position, ( ) . . . AM position,
    [ ] . . . Recording position.
24. Battery current: No signal . . . . . 150 mA
    Maximum output (radio) 1A
    AC current: Maximum output (radio) . . . . . 170 mA
25. Important safety notice
    The shaded area on this schematic diagram incorporates special features important for protection from fire and electrical shock hazards.
    When servicing it is essential that only manufacturer's specified parts be seud for the critical components in the shaded areas of the schematic.

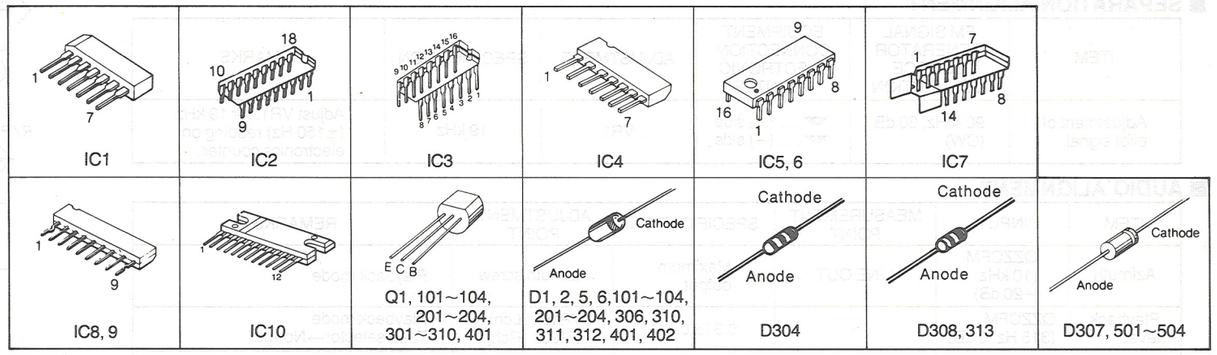

MEASUREMENTS AND ADJUSTMENTS

ALIGNMENT INSTRUCTION

READ CAREFULLY BEFORE ATTEMPTING ALIGNMENT

1. Set volume control to maximum.
2. Set bass and treble control to center.
3. Set band switch to AM or FM.
4. Set function selector to radio.
5. Set balance control to center.
6. Set mode switch to stereo.
7. Set power source voltage to 12 volts DC.
8. Output of signal generator should be no higher than necessary to obtain an output reading.

	SIGNAL GENERATOR or SWEEP GENERATOR		RADIO DIAL SETTING [DISTANCE]	INDICATOR (ELECTRONICS VOLTMETER or SCOPE)	ADJUSTMENT	REMARKS
	CONNECTIONS	FREQUENCY				
	AM ALIGNMENT					
(1)	Fashion loop of several turns of wire and radiate signal into loop of receiver.	455 kHz 30% Mode. with 400 Hz.	Point of non-interference. (on/ about 600 kHz).	Output meter across speaker voice coil.	T2 (AM IFT)	Adjust for maximum output.
(2)	″	550 kHz	550 kHz [18.5 mm (23/32″)]	″	L4 (AM OSC Coil) (*1) L3 (AM ANT Coil)	Adjust for maximum output. Adjust L3 by moving coil bobbin along ferrite core.
(3)	″	1,500 kHz	1,500 kHz [168.5 mm (6 5/8″)]	″	CT4 (AM OSC Trimmer) CT3 (AM ANT Trimmer)	Adjust for maximum output. Repeat steps (2) and (3).

(*1) Cement antenna bobbin with wax after completing alignment.

CABINET PARTS LOCATION

K11
K2
K4
K3
K1-5
K1-2
K9
K1-3
K1-6
K1-5
K12
K2-2
K1-4
K2-3
K1
K2-5
K12
K1-6
K2-6
K2-4
K2-1
K1-3
K7
K1-4
K6
K5
K1-1
K10
K8

Fig. 14

ELECTRICAL PARTS LOCATION

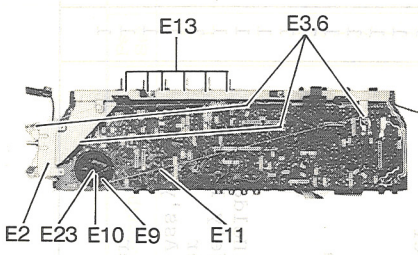

Fig. 15

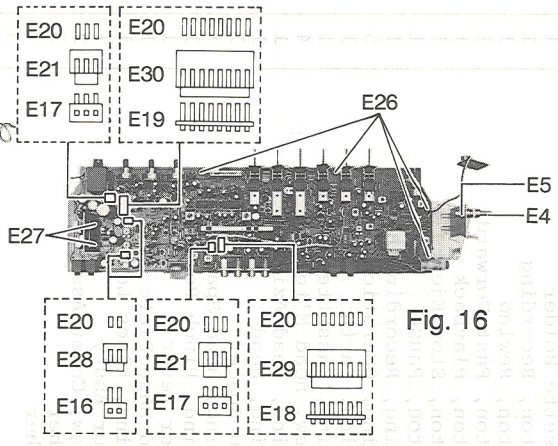

Fig. 16

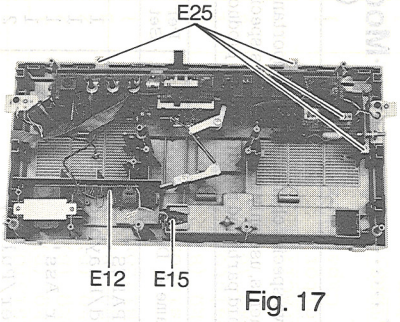

Fig. 17

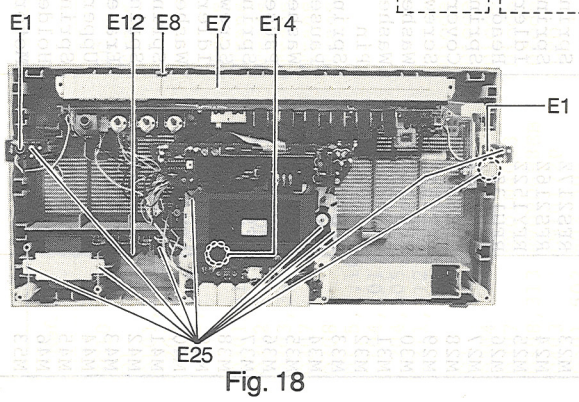

Fig. 18

Fig. 19

Ref. No.	Part No.	Part Name & Description	Per Set	Remarks
R120	ERD25FJ273	27 k 1/4W Carbon	1	S
R121	ERD25FJ682	6.8 k " "	1	S
R136	ERD25FJ470	47 " "	1	S
R137	ERD25FJ2R2	2.2 " "	1	S
R138	ERD25FJ221	220 " "	1	S
R141	ERD25FJ331	330 " "	1	S
R203	ERD25FJ100	10 " "	1	S
R209	ERD25FJ470	47 " "	1	S
R213	ERD25FJ473	47 k " "	1	S
R214	ERD25FJ332	3.3 k " "	1	S
R216	ERD25TJ154	150 k " "	1	S
R217	ERD25TJ334	330 k " "	1	S
R219	ERD25FJ472	4.7 k " "	1	S
R220	ERD25FJ273	27 k " "	1	S
R221	ERD25FJ682	6.8 k " "	1	S
R236	ERD25FJ470	47 " "	1	S
R237	ERD25FJ2R2	2.2 " "	1	S
R238	ERD25FJ221	220 " "	1	S
R241	ERD25FJ331	330 " "	1	S
R301	ERD25FJ1R0	1 " "	1	S
R302	ERD25FJ102	1 k " "	1	S
R304	ERD25FJ471	470 " "	1	S
R310	ERD25FJ2R2	2.2 " "	1	S
R311	ERD25FJ103	10 k " "	1	S
R312	ERD25FJ221	220 " "	1	S
R313	ERD25TJ106	10 M " "	1	S
R317	ERD25FJ221	220 " "	1	S
R318	ERD25FJ470	47 " "	1	S
R321	ERD25FJ331	330 " "	1	S
R322	ERD25TJ335	3.3 M " "	1	S
R323	ERD25FJ681	680 " "	1	S
R324	ERD25FJ102	1 k " "	1	S
R326	ERD25FJ273	27 k " "	1	S
R327	ERD25FJ221	220 " "	1	S
R328	ERD25FJ101	100 " "	1	S
R337	ERD25FJ332	3.3 k " "	1	S
R339	ERD25TJ474	470 k " "	1	S
R341	ERD25FJ2R7	2.7 " "	1	S
R407	ERD25FJ471	470 " "	1	S
R411	ERD25FJ103	10 k " "	1	S
R413	ERD25FJ153	15 k " "	1	S
R414,415	ERD25FJ101	100 " "	2	S
R416,417,418	ERD25FJ220	22 " "	3	S
R419	ERD25FJ471	470 " "	1	S
R420	ERD25FJ103	10 k " "	1	S
R421	ERD25FJ681	680 " "	1	S
R422	ERD25FJ561	560 " "	1	S
R423	ERD25FJ332	3.3 k " "	1	S
R424	ERD25FJ102	1 k " "	1	S
		CAPACITORS (Value is in MICRO FARADS except P.P=PICO FARADS)		
C1,2	ECKD1H102KB	0.001 50V Ceramic	2	
C3	ECCD1H180KC	18 P " "	1	
C4	ECKD1H103MD	0.01 " "	1	

Ref. No.	Part No.	Part Name & Description	Per Set	Remarks
C6	ECCD1H070DC	7 P 50V Ceramic	1	
C7	ECCD1H120KC	12 P " "	1	
C8	ECKD1H102KB	0.001 " "	1	
C9	ECCD1H100KC	10 P " "	1	
C10	ECCD1H040CC	4 P " "	1	
C11,12	ECKD1H103ZF	0.01 " "	2	
C13	ECKD1H102ZF	0.001 " "	1	
C14	ECKD1H103ZF	0.01 " "	1	
C17	ECCD1H050DC	5 P " "	1	
C18	ECFVD223MD	0.022 25V Semi-Conductor	1	
C19	ECEA1CS330	33 16V Electrolytic	1	S
C20	ECEA1HS100	10 50V "	1	S
C21	ECEA50Z1	1 " "	1	S
C23	ECEA1AS101	100 10V "	1	S
C25	ECEA25Z4R7	4.7 25V "	1	S
C26	ECFVD223MD	0.022 " Semi-Conductor	1	
C27	ECKD1H102MD	0.001 50V Ceramic	1	
C28	ECEA1AS101	100 10V Electrolytic	1	S
C29	ECFVD223MD	0.022 25V Semi-Conductor	1	
C30	ECFVD223MD	0.022 " "	1	
C31	ECCD1H470KC	47 P 50V Ceramic	1	
C32	ECCD1H331K	330 P " "	1	
C33	ECFVD223MD	0.022 25V Semi-Conductor	1	
C35	ECEA50Z1	1 50V Electrolytic	1	S
C36	ECFVD473MD	0.047 25V Semi-Conductor	1	
C37	ECEA1AS101	100 10V Electrolytic	1	S
C38	RCQP2A471JZ	470 P 100V Polyester	1	
C41	ECEA50ZR47	0.47 50V Electrolytic	1	S
C42	ECEA1HSR22	0.22 " "	1	
C43	ECEA50Z1	1 " "	1	S
C45,46	ECFVD223MD	0.022 25V Semi-Conductor	2	
C47,48	ECEA50Z1	1 50V Electrolytic	2	S
C49	ECCD1H331	330 P " Ceramic	1	
C51	ECKD1H102KB	0.001 " "	1	
C53	ECFVD473MD	0.047 25V Semi-Conductor	1	
C54	ECEA50Z3R3	3.3 50V Electrolytic	1	S
C55,56	ECCD1H331K	330 P " Ceramic	2	
C101	ECEA1HS0R1	0.1 " Electrolytic	1	
C102	ECEA1HSR22	0.22 " "	1	
C103	ECCD1H221K	220 P " Ceramic	1	
C104	ECFVD333KD	0.033 25V Semi-Conductor	1	
C105,106	ECKD1H471KB	470 P 50V Ceramic	2	
C107	ECEA1AS101	100 10V Electrolytic	1	S
C108	ECEA50Z3R3	3.3 50V "	1	S
C109	ECEA1HS100	10 " "	1	S
C110	ECKD1H102KB	0.001 " Ceramic	1	
C111	ECKD1H222MD	0.0022 " "	1	
C112	ECEA1HSR33	0.33 " Electrolytic	1	
C113	ECFVD472KA	0.0047 25V Semi-Conductor	1	
C114	ECEA1HS100	10 50V Electrolytic	1	S
C115	ECEA1HSR33	0.33 " "	1	
C116	ECKD1H102MD	0.001 " Ceramic	1	
C117	ECFVD104MD	0.1 25V Semi-Conductor	1	
C118	ECEA1HS100	10 50V Electrolytic	1	S
C119	ECFVD333KD	0.033 25V Semi-Conductor	1	
C120	ECFVD102KA	0.001 " "	1	

Ref. No.	Part No.	Part Name & Description			Per Set	Remarks
C121	ECFVD473KD	0.047	25V	Semi-Conductor	1	
C122	ECKD1H102MD	0.001	50V	Ceramic	1	
C123	ECEA1HS100	10	"	Electrolytic	1	S
C124	ECEA25Z4R7	4.7	25V	"	1	S
C125	ECEA50Z1	1	50V	"	1	S
C126	ECFVD683MD	0.068	25V	Semi-Conductor	1	
C127	ECEA1HS100	10	50V	Electrolytic	1	S
C128	RCQP2A153JZ	0.015	100V	Polyester	1	
C130	ECFVD333KD	0.033	25V	Semi-Conductor	1	
C131	ECEA1HSR33	0.33	50V	Electrolytic	1	
C132	ECQV05224JZ	0.22	"	Epoxy	1	
C133	ECEA50ZR47	0.47	"	Electrolytic	1	S
C134	ECFVD473MD	0.047	25V	Semi-Conductor	1	
C135	ECKD1H682MD	0.0068	50V	Ceramic	1	
C136	ECEA1HS0R1	0.1	"	Electrolytic	1	
C137	ECEA50Z1	1	"	"	1	S
C138	ECEA1HS0R1	0.1	"	"	1	
C139	ECKD1H472MD	0.0047	"	Ceramic	1	
C140	ECEA1AS102	1000	10V	Electrolytic	1	S
C141	ECFVD473MD	0.047	25V	Semi-Conductor	1	
C142	ECEA1AS101	100	10V	Electrolytic	1	S
C143	ECEA50Z1	1	50V	"	1	S
C144	ECKD1H222MD	0.0022	"	Ceramic	1	
C145	ECEA50Z1	1	"	Electrolytic	1	S
C146	ECEA1AS470	47	10V	"	1	S
C147	ECEA50N3R3	3.3	50V	"	1	
C148	RCQP2A361JZ	360 P	100V	Polyester	1	
C155	ECKD1H223ZF	0.022	50V	Ceramic	1	
C156	ECEA1HS0R1	0.1	"	Electrolytic	1	
C158	ECCD1H181K	180 P	"	Ceramic	1	
C201	ECEA1HS0R1	0.1	"	Electrolytic	1	
C202	ECEA1HSR22	0.22	"	"	1	
C203	ECCD1H221K	220 P	"	Ceramic	1	
C204	ECFVD333KD	0.033	25V	Semi-Conductor	1	
C205,206	ECKD1H471KB	470 P	50V	Ceramic	2	
C207	ECEA1AS101	100	10V	Electrolytic	1	S
C208	ECEA50Z3R3	3.3	50V	"	1	S
C209	ECEA1HS100	10	"	"	1	S
C210	ECKD1H102KB	0.001	"	Ceramic	1	
C211	ECKD1H222MD	0.0022	"	"	1	
C212	ECEA1HSR33	0.33	"	Electrolytic	1	
C213	ECFVD472KA	0.0047	25V	Semi-Conductor	1	
C214	ECEA1HS100	10	50V	Electrolytic	1	S
C215	ECEA1HSR33	0.33	"	"	1	
C216	ECKD1H102MD	0.001	"	Ceramic	1	
C217	ECFVD104MD	0.1	25V	Semi-Conductor	1	
C218	ECEA1HS100	10	50V	Electrolytic	1	S
C219	ECFVD333KD	0.033	25V	Semi-Conductor	1	
C220	ECFVD102KA	0.0022	"	"	1	
C221	ECFVD473KD	0.047	"	"	1	
C222	ECKD1H102MD	0.001	50V	Ceramic	1	
C223	ECEA1HS100	10	"	Electrolytic	1	S
C224	ECEA25Z4R7	4.7	25V	"	1	S
C225	ECEA50Z1	1	50V	"	1	S
C226	ECFVD683MD	0.068	25V	Semi-Conductor	1	
C227	ECEA1HS100	10	50V	Electrolytic	1	S

Ref. No.	Part No.	Part Name & Description			Per Set	Remarks
C228	RCQP2A153JZ	0.015	100V	Polyester	1	
C230	ECFVD333KD	0.033	25V	Semi-Conductor	1	
C231	ECEA1HSR33	0.33	50V	Electrolytic	1	
C232	ECQV05224JZ	0.22	"	Epoxy	1	
C233	ECEA50ZR47	0.47	"	Electrolytic	1	S
C234	ECFVD473MD	0.047	25V	Semi-Conductor	1	
C235	ECKD1H682MD	0.0068	50V	Ceramic	1	
C236	ECEA1HS0R1	0.1	"	Electrolytic	1	
C237	ECEA50Z1	1	"	"	1	S
C238	ECEA1HS0R1	0.1	"	"	1	
C239	ECKD1H472MD	0.0047	"	Ceramic	1	
C240	ECEA1AS102	1000	10V	Electrolytic	1	S
C241	ECFVD473MD	0.047	25V	Semi-Conductor	1	
C242	ECEA1AS101	100	10V	Electrolytic	1	S
C243	ECEA50Z1	1	50V	"	1	S
C244	ECKD1H222MD	0.0022	"	Ceramic	1	
C245	ECEA50Z1	1	"	Electrolytic	1	S
C246	ECEA1AS470	47	10V	"	1	S
C247	ECEA50N3R3	3.3	50V	"	1	
C248	RCQP2A361JZ	360 P	100V	Polyester	1	
C255	ECKD1H223ZF	0.022	50V	Ceramic	1	
C256	ECEA1HS0R1	0.1	"	Electrolytic	1	
C258	ECCD1H181K	180 P	"	Ceramic	1	
C301	ECEA1AS470	47	10V	Electrolytic	1	S
C302	ECKD1H103ZF	0.01	50V	Ceramic	1	
C304	ECEA1AS221	220	10V	Electrolytic	1	S
C305	ECQG1H683KZ	0.068	50V	Polyester	1	
C306	RCQP2A392JZ	0.0039	100V	"	1	
C307	ECKD1H103MD	0.01	50V	Ceramic	1	
C308	ECEA1CS221	220	16V	Electrolytic	1	S
C309	ECKD1H222MD	0.0022	50V	Ceramic	1	
C310	ECKD1H222MD	0.0022	"	"	1	
C311	ECKD1H472MD	0.0047	"	"	1	
C312	ECEA1HS100	10	"	Electrolytic	1	S
C313	ECEA1CS221	220	16V	"	1	S
C314	ECEA1HS100	10	50V	"	1	S
C316	ECEA1CS471	470	16V	"	1	
C317	ECKD1H103ZF	0.01	50V	Ceramic	1	
C318	ECEA1CS221	220	16V	Electrolytic	1	S
C319	ECEA1CS471	470	"	"	1	S
C320	ECEA1CS332	3300	"	"	1	S
C321	ECEA1AS471	470	10V	"	1	S
C322	ECEA50ZR47	0.47	50V	"	1	S
C323	ECFVD153MD	0.015	"	Semi-Conductor	1	
C324	ECFVD153MD	0.015	"	"	1	
C325	ECEA1ES101	100	25V	Electrolytic	1	S
C330	ECEA1AS221	220	10V	"	1	S
C331	ECEA1ES220	22	25V	"	1	S
C332	ECEA1CS330	33	16V	"	1	S
C335,338,340,341	ECKD1H471KB	470P	50V	Ceramic	4	
C342	ECCD1H331K	330 P	"	"	1	
C343	ECKD1H102KB	0.001	"	"	1	
C401	ECFVD472KA	0.0047	25V	Semi-Conductor	1	
C402	ECEA1HSR33	0.33	50V	Electrolytic	1	
C403,404	ECEA50Z1	1	"	"	2	S

Ref. No.	Part No.	Part Name & Description	Per Set	Remarks
C405	ECEA1HS100	10 50V Electrolytic	1	S
C406	ECEA25Z4R7	4.7 25V "	1	S
C407	ECFVD223MD	0.022 " Semi-Conductor	1	
C408	ECEA1ES220	22 " Electrolytic	1	S
C409	ECSF25E3R3	3.3 " "	1	
C410,411	ECFVD473MD	0.047 " Semi-Conductor	2	
C412,413	ECEA1HS100	10 50V Electrolytic	2	S
C414	ECFVD683MD	0.068 25V Semi-Conductor	1	
C501,502,503,504	ECKD1H103ZF	0.01 50V Ceramic	4	
		CABINET PARTS		
K1	RYMX5085M	Front Cabinet Ass'y	1	
K1-1	RYQX5085M	Cassette Panel Ass'y	1	
K1-2	RKX217Z	Handle	1	
K1-3	RKX189Z	Arm, Handle	2	
K1-4	RKX184X	Spacer, Arm	2	
K1-5	XTB3+8CFN	Screw, Handle	2	
K1-6	RKT130Z	Bracket, Arm	2	
K2	RYFX5085M7	Rear Cabinet Ass'y	1	
K2-1	RJC931Z	Spring, Battery +, - Side	1	
K2-2	RDS3190Z	Spring, Lever	1	
K2-3	RDS4480Z	Spring, Lever	1	
K2-4	XTV3+12G	Screw, Boss	2	
K2-5	XTWR3+12Q	Screw, Lever	2	
K2-6	RKE407Z	Boss, Mic	1	
K3	RYNX5100N7	Cover, Battery	1	
K4	XEARR345CAN	Telescopic Antenna	1	
K5	RBD153Z	Knob, Balance	1	
K6	RBN567W	Knob, Tuning	1	
K7	RBN600Z	Knob, Volume, Boss, Treble	3	
K8	RBS191Y	Knob, Selector, Tape, Band, etc.	6	
K9	XYN3+F15FY	Screw, Telescopic Antenna	1	
K10	RHE5040Z	Screw, Cassette Panel	2	
K11	XTV3+40G	Screw, Cabinet M'tg	7	
K12	RGM234Z	Metal Grille, Tweeter	2	
		ELECTRICAL PARTS		
E1	RJM149Z	Built-In MicroPhone	2	
E2	RZAX5080N	Dial Chassis Ass'y	1	
E3	RDR20-3	Roller, Dial	3	
E4	RDT1295Z	Shaft, Tuning	1	
E5	XNS9	Nut, Tuning Shaft	1	
E6	RNW150-2	Washer, Roller	3	
E7	RKD610Y	Scale, Dial	1	
E8	RDP842Z	Pointer, Dial	1	
E9	RDD4015Y	Drum, Dial	1	
E10	RDS4060A	Spring, Drum	1	
E11	RDZ05Z	Cord, Dial (140cm)	1 ROLL	
E12	RUV656Z	Cover, Switch	1	
E13	RUV658Z	Cover, Switch	6	
E14	RHG581Z	Buffer, Recording Lever	1	
E15	RJC511Z	Spring, Battery - Side	1	
E16	RJP2G1Z	2 Pin Plug	2	
E17	RJP3G1Z	3 Pin Plug	2	

Ref. No.	Part No.	Part Name & Description	Per Set	Remarks
E18	RJP6G1Z	6 Pin Plug	1	
E19	RJP8G1Z	8 Pin Plug	1	
E20	RJT462Z	Terminal Socket	5	
E21	RJS3L1Z	3 Pin Socket	1	
E23	XYN26+C5	Screw, Drum M'tg	1	
E24	XTV3+10G	Screw, Vol. SP. etc. M'tg	13	
E25	XTV3+12G	Screw, C-Mic, LED, AC Jack, etc. M'tg	12	
E26	XTV3+6F	Screw	4	
E27	XYN3+F10S	Screw, IC M'tg	2	
E28	RJS2L1Z	2 Pin Socket	2	
E29	RJS6L1Z	6 Pin Socket	1	
E30	RJS8L1Z	8 Pin Socket	1	
		ACCESSORY		
	RJA22Y	Power Cord, AC	1	⚠
		PACKING MATERIALS		
P1	RPK1341Z	Gift Box	1	
P2	RPN9417Z	Pad Complete	1	
P3	XZB70X50A04	Polyethylene Cover	1	S
P4	RPN3769Z	Pad	1	
		PRINTED MATERIAL		
Y1	RQX6873Z	Instruction Book	1	

PACKING MATERIALS

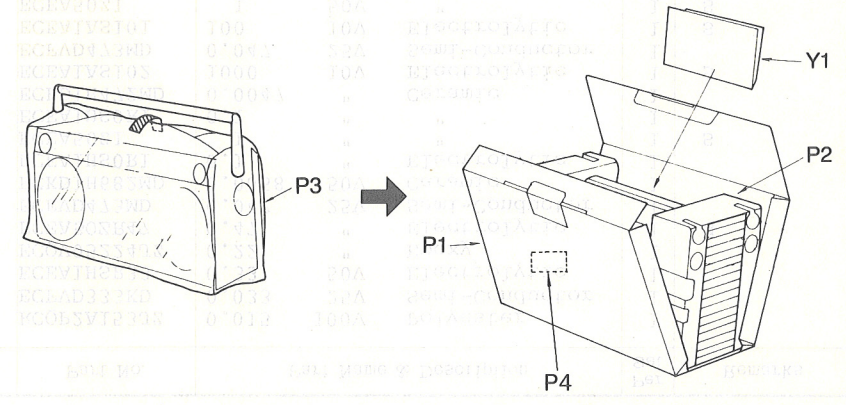

Fig. 20