15/12/2013
ORDER NO. AD9206188C2

Service Manual

Portable Stereo CD System

Radio Cassette

RX-DS303

COMPACT disc DIGITAL AUDIO

Colour

(K)	Black Type

Areas

Suffix for Model No.	Area	Colour
(EB)	Great Britain	(K)
(EG)	Europe	

TAPE DECK: RX-FD55 MECHANISM SERIES (AR300)
TRAVERSE DECK: RX-DT55 MECHANISM SERIES (S0DD110)

■ SPECIFICATIONS

General:

Power Requirement:	AC; 230~240 V, 50 Hz Battery; 15 V (10 R20/LR20, UM-1 batteries) Memory Back-up for Computer/Clock; 6 V (4 R6/LR6, UM-3 batteries)
Power Consumption:	43 W
Power Output:	45 W...PMPO
Speaker:	10 cm PM Dynamic speaker 2.7Ω
Input:	MIX MIC; 5 mV/200~600Ω ∅3.5
Output:	HEADPHONES; 32Ω, ∅3.5
Dimensions:	398 (W)×223 (H)×218 (D) mm
Weight:	5.0 kg without batteries

Disc Player Section:

Sampling Frequency:	44.1 kHz
D-A Conversion:	16-bit linear
Beam Source:	Semiconductor laser (wavelength 780 nm)
No. of Channels:	2 channels, stereo
Frequency Range:	20~20,000 Hz (+1/−2 dB)
Wow and Flutter:	Less than possible measurement data
D/A Converter:	MASH (1 BIT)

Radio Section:

Frequency Range:	FM; 87.5~108 MHz LW; 144~288 kHz MW; 522~1611 kHz
Intermediate Frequency:	FM; 10.7 MHz AM (LW/MW); 459 kHz
Sensitivity:	FM; 9 dBμ/50 mW output MW; 37 dB/m/50 mW output LW; 39 dB/m/50 mW output

Tape Deck Section:

Frequency Range:	60~16,000 Hz (with normal tape)
Recording System:	AC bias, AC erase
Tape Speed:	4.8 cm/s
Monitor System:	Variable sound monitor
Track System:	4-track 2-channel stereo recording and playback

Notes:
1. Weights and dimensions shown are approximate.
2. Design and specifications are subject to change without notice.

Panasonic

■ CONTENTS

CAUTION:
THIS PRODUCT UTILIZES A LASER.
USE OF CONTROLS OR ADJUSTMENTS OR PERFORMANCE OF PROCEDURES OTHER THAN THOSE SPECIFIED HEREIN MAY RESULT IN HAZARDOUS RADIATION EXPOSURE.

■ PRECAUTION OF LASER DIODE

CAUTION: This product utilizes a laser diode with the unit turned "on", invisible laser radiation is emitted from the pick up lens.

Wave length: 780 nm
Maximum output radiation power from pick up: 100 μW/VDE

Laser radiation from the pick up lens is safety level, but be sure the followings:

1. Do not disassemble the optical pick up unit, since radiation from exposed laserd diode is dangerous.
2. Do not adjust the variable resistor on the pickup unit. It was already adjusted.
3. Do not look at the focus lens using optical instruments.
4. Recommend not to look at pick up lens for a long time.

ACHTUNG: Dieses produkt enthält eine laserdiode. Im eingeschalteten zustand wird unsichtbare laserstrahlung von der lasereinheit abgestrahlt.

Wellenlänge: 780 nm
Maximale strehlungsleistung der lasereinheit: 100 μW/VDE

Die strahlung an der lasereinheit ist ungefährlich, wenn folgende punkte beachtet werden:

1. Die lasereinheit nicht zerlegen, da die strahlung an der freigelegten laserdiode gefährlich ist.
2. Den werksseitig justierten einstellregler der lasereinreit nicht verstellen.
3. Nicht mit optischen instrumenten in die fokussierlinse blicken.
4. Nicht über längere zeit in die fokussierlinse blicken.

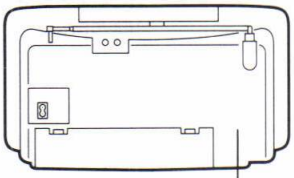

CLASS 1
LASER PRODUCT

LUOKAN 1 LASERLAITE
KLASS 1 LASER APPARAT

VORSICHT-Unsichtbare Laserstrahlung, wenn Abdeckung geöffnet und Sicherheitsverriegelung überbrückt. Nicht dem Strahl aussetzen.
(Im Inneren des Gerätes)

DANGER-Invisible laser radiation when open and interlock defeated. AVOID DIRECT EXPOSURE TO BEAM.
(Inside of product)

VARO! Avattaessa ja suojalukitus ohitettaessa olet alttiina näkymättömälle lasersäteilylle. Älä katso säteeseen.

VARNING! Osynlig laserstrålning när denna del är öppnad och spärren är urkopplad. Betrakta ej strålen.

ADVARSEL: USYNLIG LASERSTRÅLING VED ÅBNING, NÅR SIKKERHEDSAFBRYDERE ER UDE AF FUNKTION. UNDGÅ UDSÆTTELSE FOR STRÅLING.
(Indersiden at apparatet)

■ LOCATION OF CONTROLS

The functions indicated by the numbers with a black background (for example ❼) can also be activated from the remote control transmitter. (See page 6.)

CD/GENERAL CONTROLS

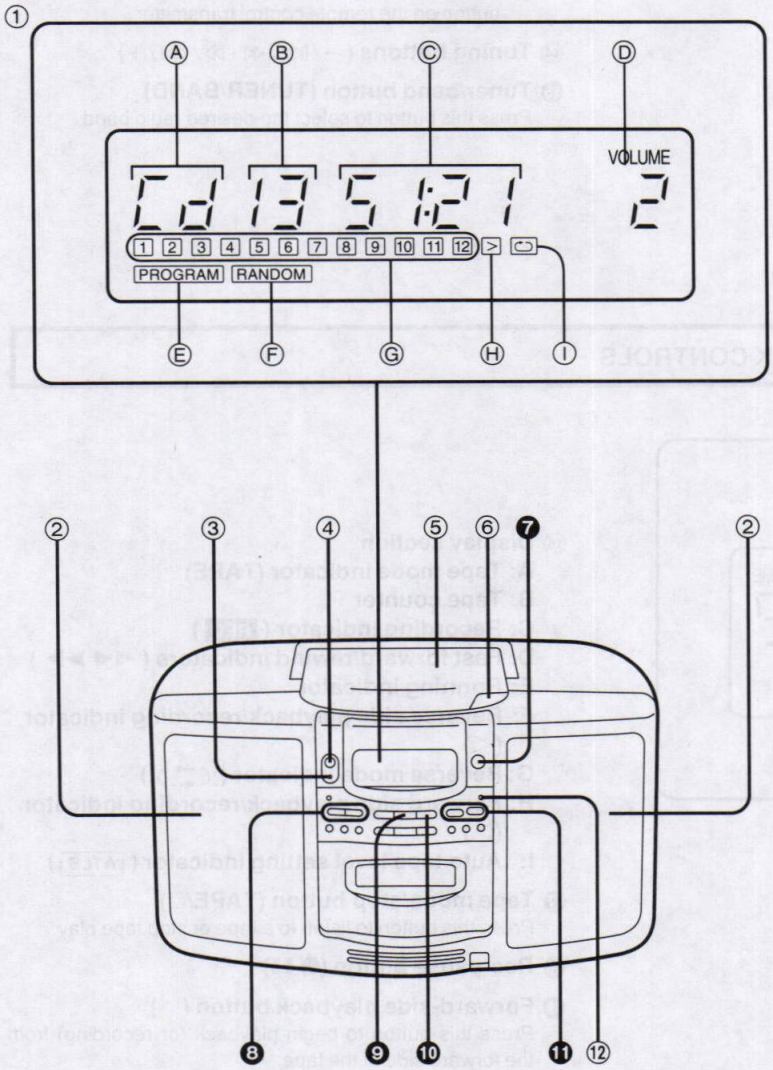

① **Display section**
- **A: CD mode indicator (Cd)**
- **B: Track display**
- **C: Playing time display**
- **D: Volume level display (VOLUME)**
- **E: Program indicator (PROGRAM)**
- **F: Random indicator (RANDOM)**
- **G: Music matrix**
- **H: Over mark indicator (▷)**
- **I: Repeat indicator (⟲)**

② **Speakers (10 cm, 2.7Ω)**

③ **Operation/battery check/AC connection indicator (OPR/BATT STANDBY ⏻)**
The indicator lights up green when the unit is turned on. It functions as a battery check indicator when the unit is operated on batteries. When the AC mains supply is used, it functions as an AC connection indicator. (The indicator colour changes to red when the unit is turned off.)

④ **Remote control sensor**

⑤ **Compact disc holder**

⑥ **CD eject button (▲ CD EJECT)**

❼ **Operation switch (OPERATION)**

❽ **Skip/search buttons (– / ⏮ / ◁◁ • ▷▷ / ⏭ / +)**

❾ **CD mode/stop button (CD/□)**
Press this button to listen to a CD or to stop CD play.

❿ **Play button (▷)**
Press this button to start disc play.

⓫ **Volume level control (VOLUME)**

⓬ **Tone control switch (TONE)**

TUNER CONTROLS

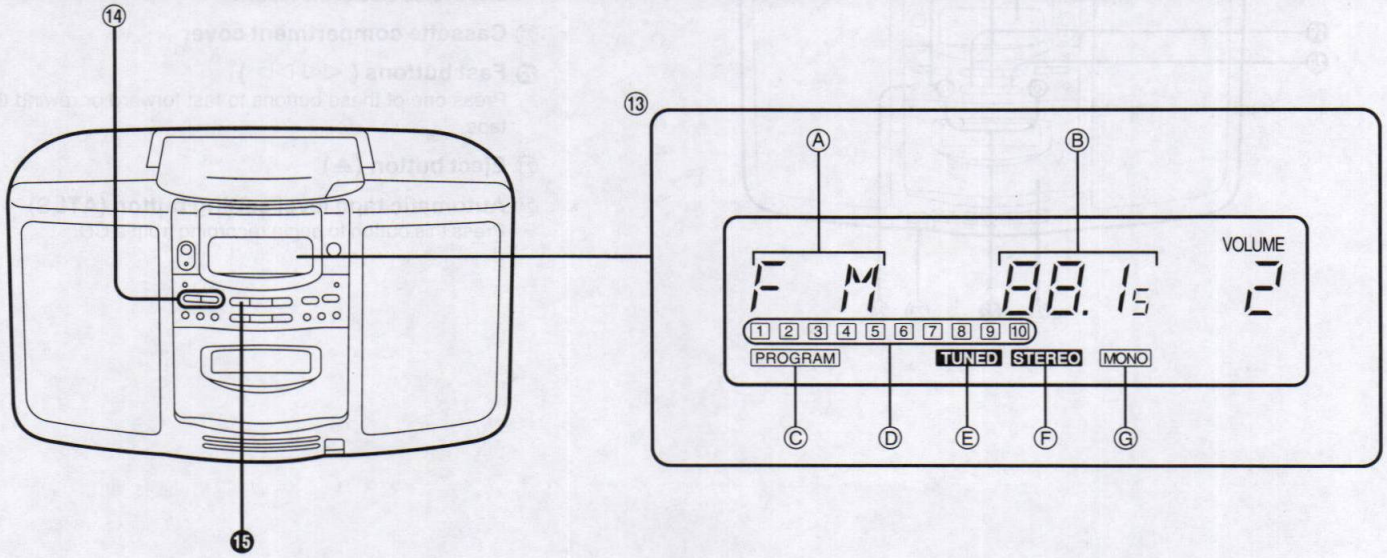

⑬ **Display section**
- **A: Band indicator (FM/MW/LW)**
- **B: Frequency display**
- **C: Program indicator (PROGRAM)**
- **D: Channel number indicators (1 – 10)**
- **E: Tuning indicator (TUNED)**
- **F: Stereo indicator (STEREO)**
- **G: Monaural indicator (MONO)**
  This indicator appears when the unit is set to monaural reception by pressing the FM mode/beat proof button on the remote control transmitter.

⑭ **Tuning buttons (– / ⏮ / ◁◁ · ▷▷ / ⏭ / +)**

⑮ **Tuner/band button (TUNER/BAND)**
Press this button to select the desired radio band.

DECK CONTROLS

⑯

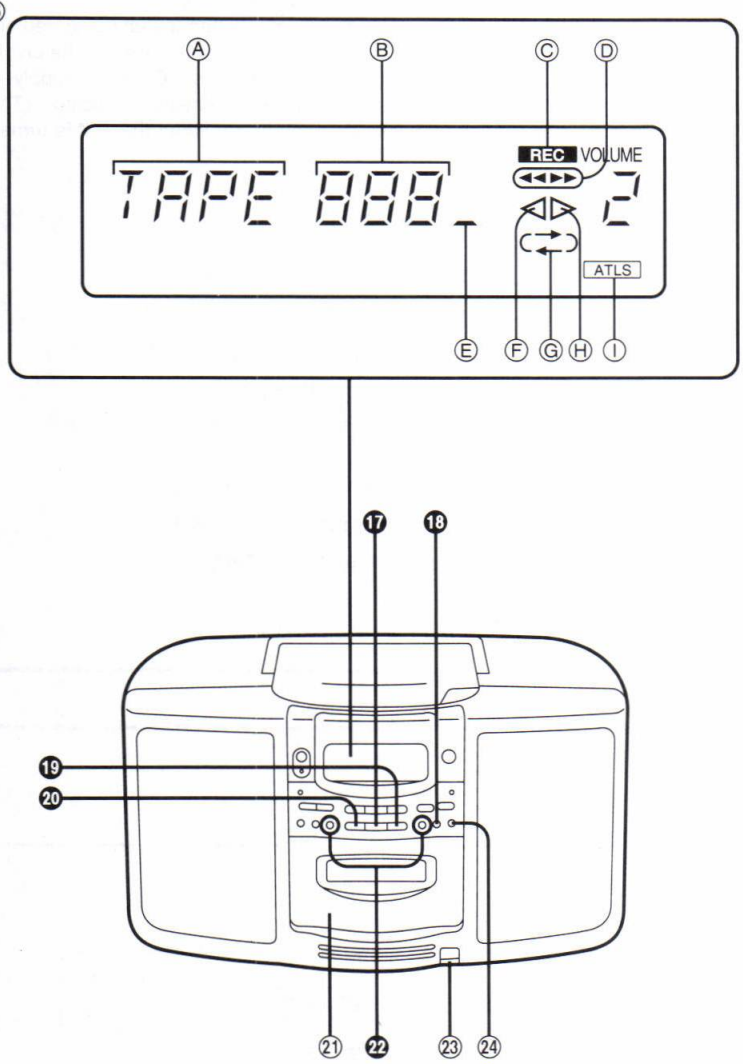

⑯ **Display section**
- **A: Tape mode indicator (TAPE)**
- **B: Tape counter**
- **C: Recording indicator (REC)**
- **D: Fast forward/rewind indicators (◀◀ ▶▶)**
- **E: Running indicator**
- **F: Reverse side playback/recording indicator (◁)**
- **G: Reverse mode indicator (⊂⇄⊃)**
- **H: Forward side playback/recording indicator (▷)**
- **I: Auto tape level setting indicator (ATLS)**

⑰ **Tape mode/stop button (TAPE/□)**
Press this button to listen to a tape or stop tape play.

⑱ **Rec-pause button (● ❚❚)**

⑲ **Forward-side playback button (▷)**
Press this button to begin playback (or recording) from the forward side of the tape.

⑳ **Reverse-side playback button (◁)**
Press this button to begin playback (or recording) from the reverse side of the tape.

㉑ **Cassette compartment cover**

㉒ **Fast buttons (◁◁ ▷▷)**
Press one of these buttons to fast forward or rewind the tape.

㉓ **Eject button (⏏)**

㉔ **Automatic tape level setting button (ATLS)**
Press this button to begin recording from a CD.

TIMER CONTROLS

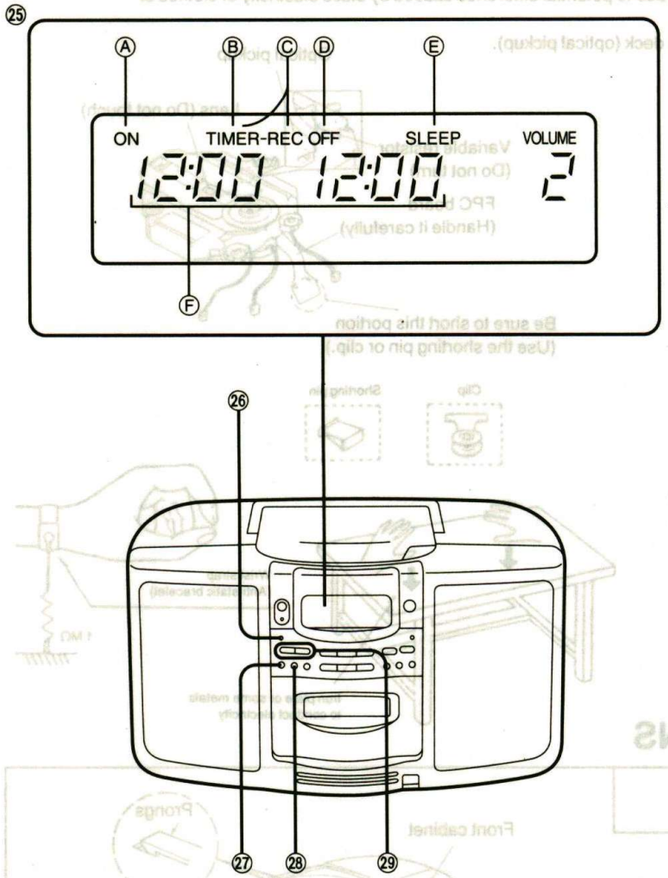

㉕ Display section
A: Timer ON indicator (ON)
B: Timer play indicator (TIMER)
C: Timer recording indicator (TIMER-REC)
D: Timer OFF indicator (OFF)
E: Sleep timer indicator (SLEEP)
F: Timer display

㉖ Timer button (TIMER)
Press this button to select the desired timer mode (timer-play, timer-recording) and cancel the timer mode.

㉗ Time adjust button (ADJUST)
Press this button to adjust the time.

㉘ Timer check button (CHECK)
Press this button to check the preset timer mode (preset time and source).

㉙ Time set buttons (−/⏮/◁◁·▷▷/⏭/+)

REAR PANEL

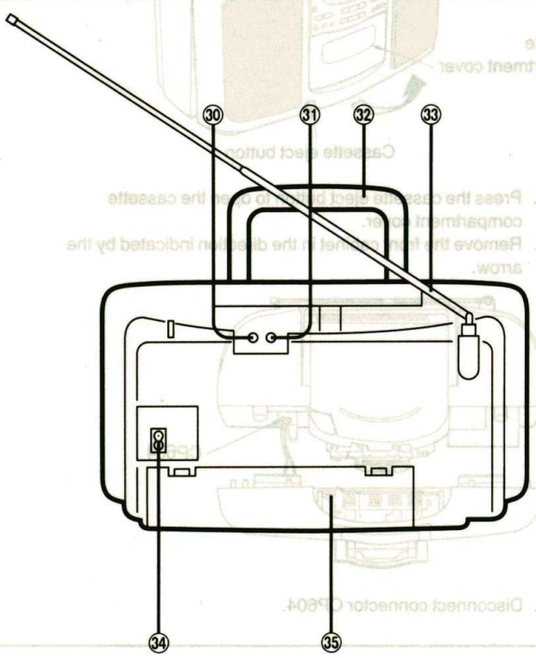

㉚ Mixing microphone jack (MIX MIC) (∅3.5, 200~600Ω)
㉛ Headphones jack (PHONES) (∅3.5, 32Ω)
㉜ Handle
㉝ Telescopic antenna
㉞ AC socket (AC IN~)
㉟ Battery compartment cover

REMOTE CONTROL OPERATION

■ Operations

The following operations can be performed using the remote control transmitter.
They are identical to the operations performed using the main unit controls.

•Operation Switch
Operation OFF when the unit is powered by dry batteries.
Operation ON/OFF when the unit is powered by an AC main supply.
The "OFF" position as same function as "BATT STAND-BY ⏻" position on the main unit.

•CD operation
Selection of CD mode, sequential play, program play, direct access play, random play, repeat play, skip play, search play, program clear, pause, stop.

•Radio operations
Selection of tuner mode, band switching, preset tuning, FM mode selection/beat proof.

•Tape operation
Selection of tape mode, forward-side playback, reverse-side playback, stop, fast forward, rewind, recording pause, recording.

•Others
Sleep ON/OFF, display selection.

•Volume control
Volume up/down.

•The receiving angle is approx. 60° (30° in each of the left, right, up, and down directions).
•The maximum usable distance is about 7 m when the remote control transmitter is aimed directly at the remote control sensor.

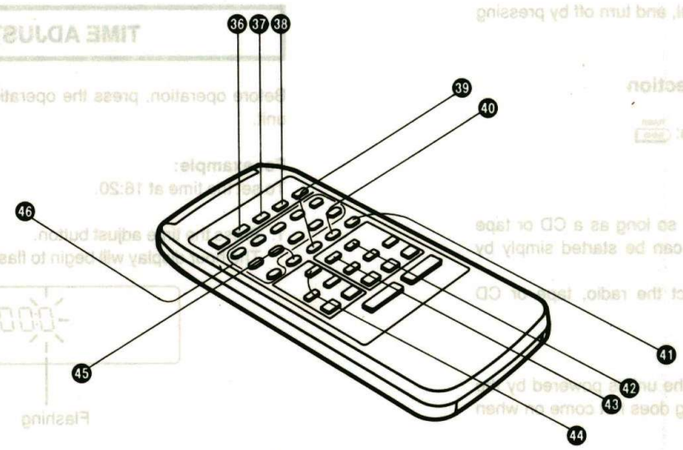

㊱ Sleep timer button (SLEEP)
Press this button when you wish to fall asleep while listening to music.

㊲ Display button (DISPLAY)
Press this button when you wish to check the present time while listening to CD, radio or tape play.

㊳ FM mode/beat proof button (FM MODE/B.P)
The function of this button changes according to the selected radio band.
AM: Beat proof (for recording from the AM radio)
FM: MONO/STEREO

㊴ Cancel button (CANCEL)

㊵ Random button (RANDOM)
Press this button to let the microcomputer make a random selection of the sequence.

㊶ Repeat button (REPEAT)
Press this button to activate the repeat mode.

㊷ Tape counter reset button (COUNTER RESET)

㊸ Reverse mode select button (REVERSE MODE)

㊹ CD pause button (❚❚)
Press this button to stop the disc play temporarily.

㊺ Program button (PROGRAM)
Press this button for programmed CD play and for preset memory of the tuner.

㊻ Numeric buttons (1–10/0, +10)
These buttons are used to specify the CD tracks (1–10/0, +10), and select the preset memory channel of the tuner (1–10/0).

Note:
Please refer to "LOCATION OF CONTROLS" (on pages 3–5) section for the controls not described above.

BASIC OPERATING PROCEDURE

■ Beep sound function

The beep sound (beep) will be heard each time the operation button is pressed. This is convenience for confirmation of the operations by remote control transmitter. Also, error beeps (beep beep) will be heard when the wrong buttons are pressed.
(For example, for CD play, when a nonexistent track is specified.)
The beep function cannot be turned off.

■ Direct access play function (AC power operation only)

If, already the CD and/or cassette tape is loaded, the CD play or tape playback can be started by simply pressing the CD play button or tape playback button even if the unit is turned off.
Also radio reception can be turned on by pressing the tuner/band button.
(This unit is turned on and the appropriate sound source is selected automatically.)

■ After use

Be sure to reduce the volume level, and turn off by pressing the operation switch.

■ Function (play mode) selection

To listen to/record a CD: [CD/□]
To listen to/record a radio program: [TUNER BAND]
To listen to/record a tape: [TAPE/□]

•Auto function

Even when listening to the radio, so long as a CD or tape has already been installed, play can be started simply by pressing the play key directly.
(This obviates the need to select the radio, tape or CD function.)

•Backlighting of display

The display is backlit only when the unit is powered by the AC mains supply. The backlighting does not come on when it is battery operated.

■ Volume adjustment

Press one of the volume level control buttons.
+: For increasing the volume.
−: For reducing the volume.

Volume display

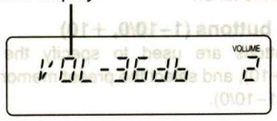

•While the volume is being adjusted:

The volume level is indicated in decibels ("db" on the actual display).
The volume can be adjusted from "– –" dB (minimum) to "0" dB (maximum).

•After the volume has been adjusted:

The present volume level is indicated as an approximation by a number from 0 to 10.

•The adjusted volume:

Is stored and retained in the memory even when the unit is switched off. (Before switching on the unit, check that the volume is not set high on the display.)
The volume can be adjusted even with the operation "OFF".

■ Tone adjustment

The level changes each time the tone control switch is pressed.
The display changes each time the switch is pressed.

0: Standard
H1, H2: The treble is accentuated.
L: The treble is attenuated.

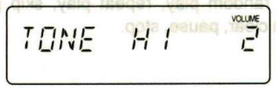

TIME ADJUSTING

Before operation, press the operation switch to turn on the unit.

For example:
To set the time at 16:20.

1. Press the time adjust button.
   The hour display will begin to flash.

Flashing

2. Press one of the time set buttons to display 16, then press the time adjust button.
   The minute display will begin to flash.
   +: Increase.
   −: Decrease.

Flashing

3. Press one of the time set buttons to display 20, then press the time adjust button to finish setting the time.
   The display will change to the previous display.
   Note that the minute "0" display appears following "59" but that the hour display is not changed.

■ HANDLING PRECAUTIONS FOR TRAVERSE DECK

The laser diode in the traverse deck (optical pickup) may break down due to potential difference caused by static electricity of clothes or human body.
So, be careful of electrostatic breakdown during repair of the traverse deck (optical pickup).

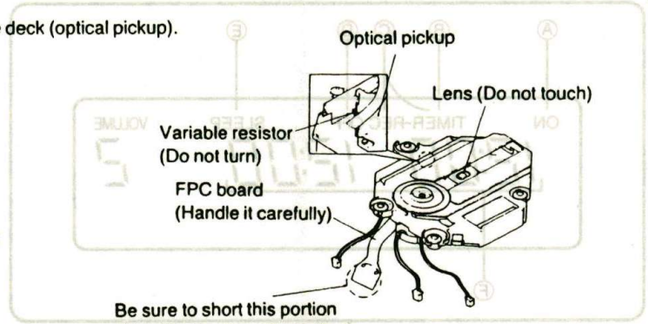

•Handling of traverse deck (optical pickup)

1. Do not subject the traverse deck (optical pickup) to static electricity as it is extremely sensitive to electrical shock.
2. To prevent the breakdown of the laser diode, an anti-static shorting pin is inserted into the flexible board (FPC board). When removing or connecting the short pin, finish the job in as short time as possible.
3. Take care not to apply excessive stress to the flexible board (FPC board).
4. Do not turn the variable resistor (laser power adjustment). It has already been adjusted.

•Grounding for electrostatic breakdown prevention

1. Human body grounding
   Use the anti-static wrist strap to discharge the static electricity from your body.
2. Work table grounding
   Put a conductive material (sheet) or steel sheet on the area where the traverse deck (optical pickup) is placed, and ground the sheet.

Caution:
The static electricity of your clothes will not be grounded through the wrist strap. So, take care not to let your clothes touch the traverse deck (optical pickup).

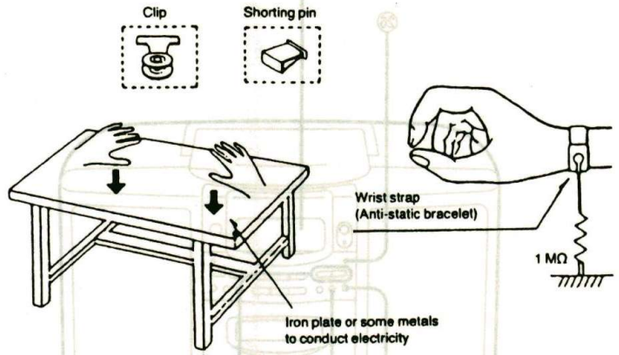

■ DISASSEMBLY INSTRUCTIONS

Ref. No. 1	Removal of the Front Cabinet
Procedure 1	

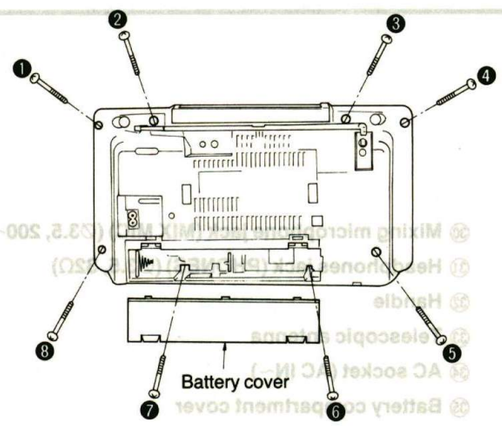

1. Remove the battery cover.
2. Remove screws ❶~❽.

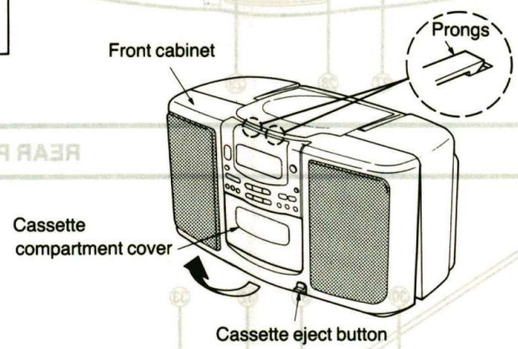

3. Press the cassette eject button to open the cassette compartment cover.
4. Remove the front cabinet in the direction indicated by the arrow.

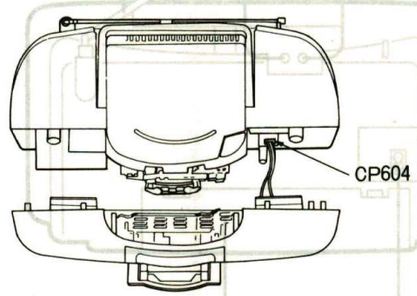

5. Disconnect connector CP604.

Ref. No. 2 — Removal of the Mechanism

Procedure 1→2

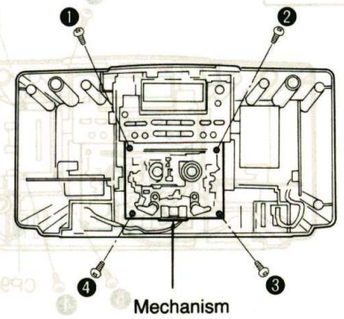

1. Remove screws ❶~❹.

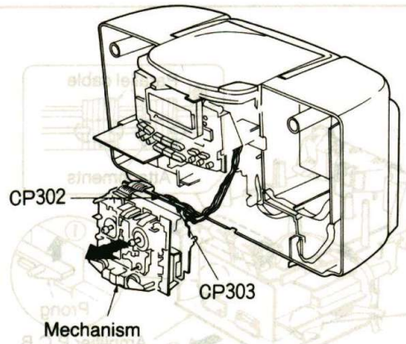

2. Pull out the mechanism.
3. Disconnect connectors CP302 and CP303.

Ref. No. 3 — Removal of the Top Cabinet

Procedure 1→3

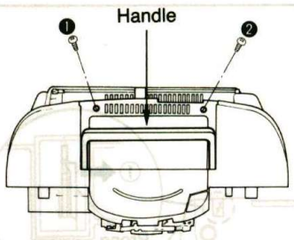

1. Raise the handle.
2. Remove screws ❶ and ❷.

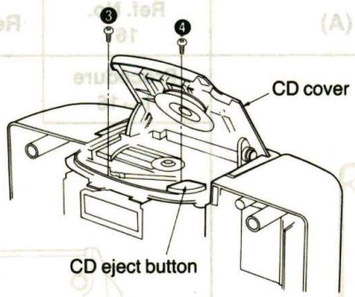

3. Press the CD eject button to open the CD cover.
4. Remove the two screws (❸ and ❹).

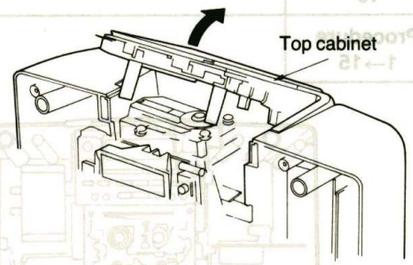

5. Close the CD cover and remove the top cabinet in the direction indicated by the arrow.

Ref. No. 4 — Removal of the Operation Control P.C.B.

Procedure 1→3→4

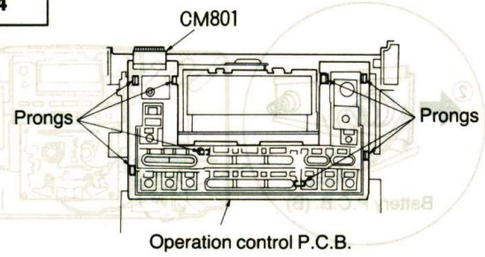

1. Disconnect connector CM801.
2. Unhook the eight prongs.

Ref. No. 5 — Removal of the Operation Buttons

Procedure 1→3→4→5

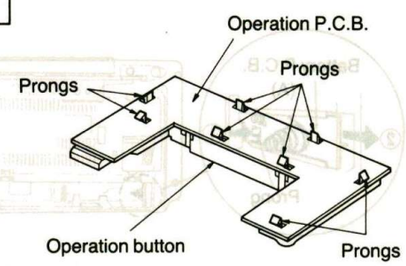

- Unhook the eight prongs.

Ref. No. 6 — Removal of the Handle

Procedure 1→3→6

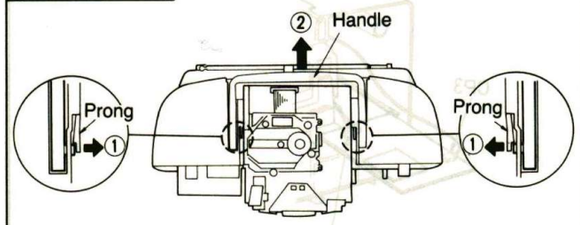

- Unhook the prongs in the directions indicated by arrows ① and then remove the handle in the direction indicated by arrow ②.

Ref. No. 7 — Removal of the CD Unit

Procedure 1→3→7

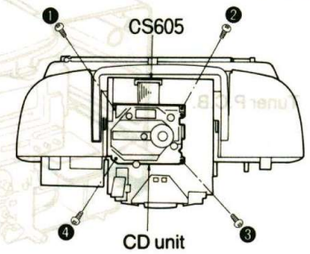

1. Disconnect connector CS605.
2. Remove screws ❶~❹.

Ref. No. 8 — Removal of the CD P.C.B.

Procedure 1→3→7→8

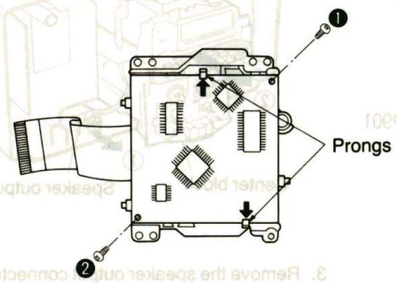

1. Remove screws ❶ and ❷.
2. Unhook the two prongs in the directions indicated by the arrows.

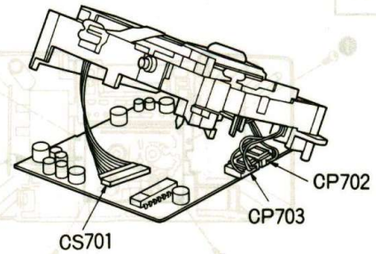

3. Disconnect connectors CS701, CP702, and CP703. (After disconnecting CS701, attach a short-circuit pin to the flexible P.C.B.; refer to page 8 for details.)

Ref. No. 9 — Removal of the Traverse Unit

Procedure 1→3→7→9

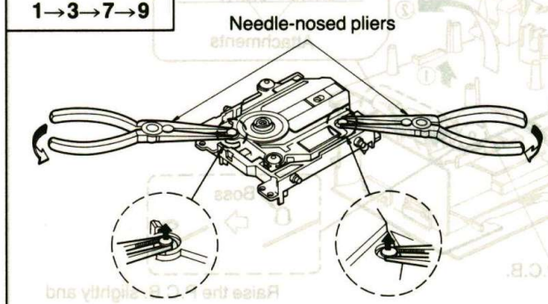

1. Use needle-nosed pliers to remove the pins as shown. (If the pins are broken, replace them.)

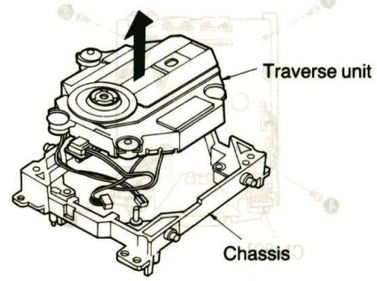

2. Remove the traverse unit from the chassis.

Ref. No. 10	Removal of the Tuner P.C.B.
Procedure 1→10	

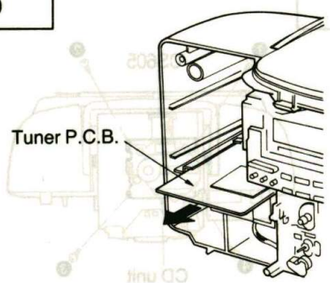

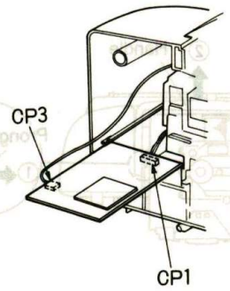

1. Pull out the tuner P.C.B. in the direction indicated by the arrow.
2. Disconnect connectors CP1 and CP3.

Ref. No. 11	Removal of the Center Block
Procedure 1→3→10→11	

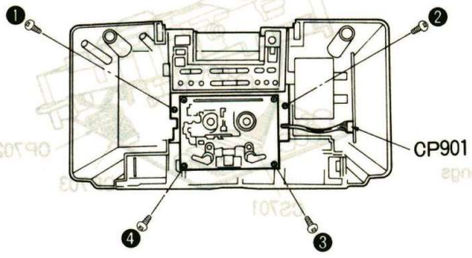

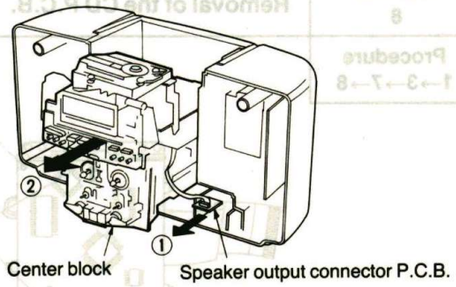

1. Remove screws ❶~❹.
2. Disconnect connector CP901.
3. Remove the speaker output connector P.C.B. in the direction indicated by arrow ①.
4. Remove the center block in the direction indicated by arrow ②.

Ref. No. 12	Removal of the Main P.C.B.
Procedure 1→2→3→7→10→11→12	

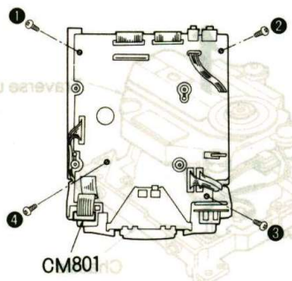

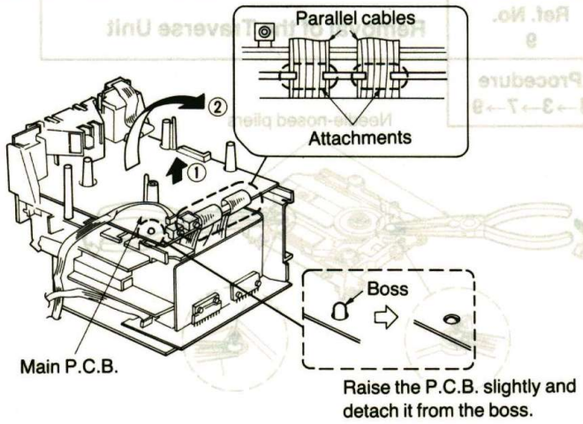

1. Disconnect connector CM801.
2. Remove screws ❶~❹.
3. Detach the parallel cables from their attachments.
4. Remove the main P.C.B. in the direction indicated by the arrows.

Ref. No. 13	Removal of the Amplifier P.C.B.
Procedure 1→3→7→11→13	

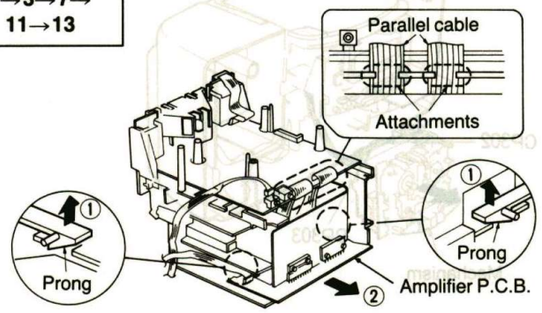

1. Detach the parallel cables from their attachments.
2. Press the two prongs in the directions indicated by arrows ① and remove the amplifier P.C.B. in the direction indicated by arrow ②.

Ref. No. 14	Removal of the Power P.C.B.
Procedure 1→14	

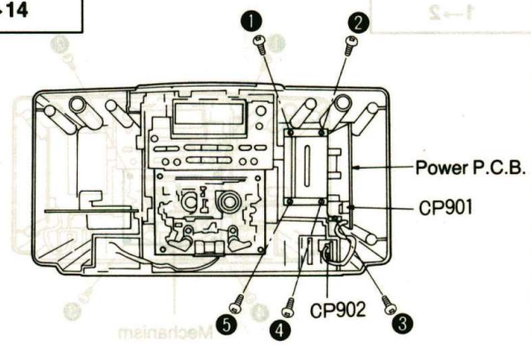

1. Disconnect connectors CP901 and CP902.
2. Remove screws ❶~❺.

Ref. No. 15	Removal of Battery P.C.B. (A)
Procedure 1→15	

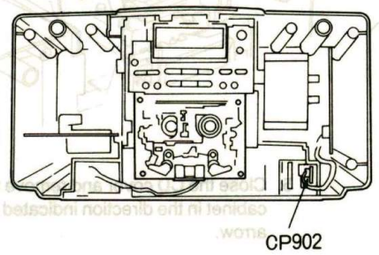

1. Disconnect connector CP902.

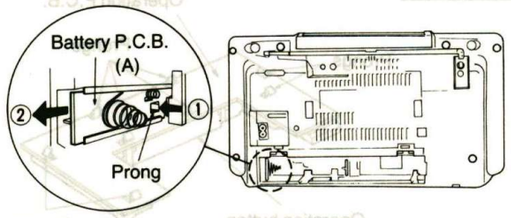

2. While pressing the prong in the direction indicated by arrow ①, remove battery P.C.B. (A) in the direction indicated by arrow ②.

Ref. No. 16	Removal of Battery P.C.B. (B)
Procedure 1→16	

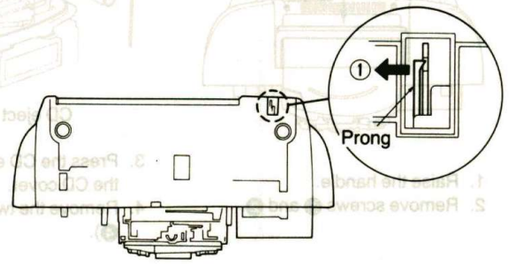

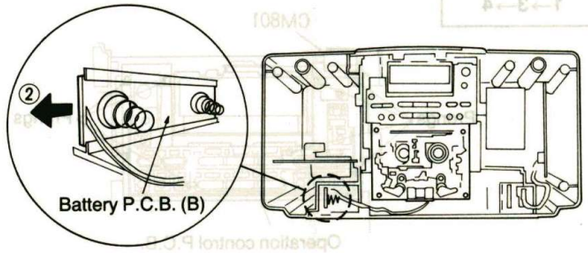

•While pressing the prong in the direction indicated by arrow ①, remove battery P.C.B. (B) in the direction indicated by arrow ②.

Ref. No. 17 — Removal of Battery P.C.B. (C)

Procedure 1→2→17

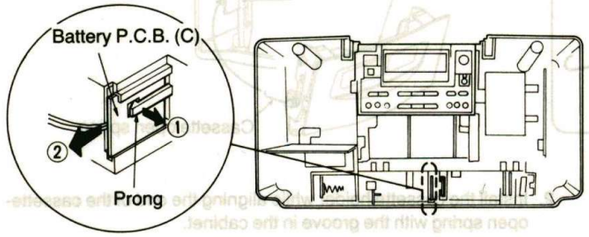

- While pressing the prong in the direction indicated by arrow ①, remove battery P.C.B. (C) in the direction indicated by arrow ②.

Ref. No. 18 — Removal of the Back-up Battery P.C.B.

Procedure 1→2→18

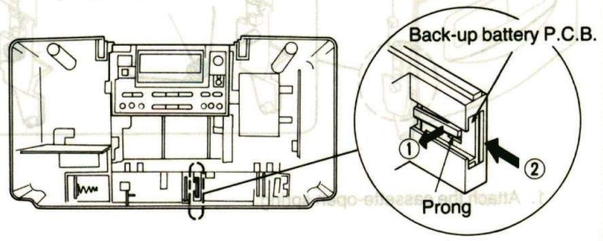

- While pressing the prong in the direction indicated by arrow ①, remove the back-up battery P.C.B. in the direction indicated by arrow ②.

Ref. No. 19 — Removal of the Mechanism Control P.C.B.

Procedure 1→2→19

1. Disconnect connectors CP301 and J971.
2. Remove the soldering from the motor wires.
3. Remove screws ❶.
4. Detach the P.C.B. from the two bosses.
5. Move the P.C.B. to detach it from the hooks.

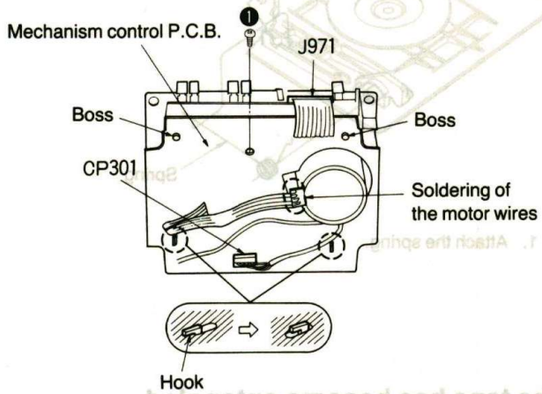

Ref. No. 20 — Removal of the CD Cover

Procedure 1→3→20

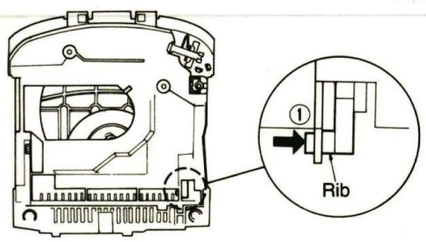

1. Detach the rib in the direction indicated by arrow ①.

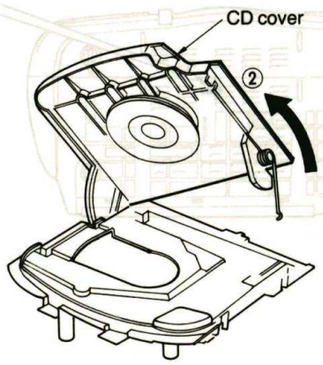

2. Remove the CD cover in the direction indicated by arrow ②.

Ref. No. 21 — Removal of the Disc Holder

Procedure 21

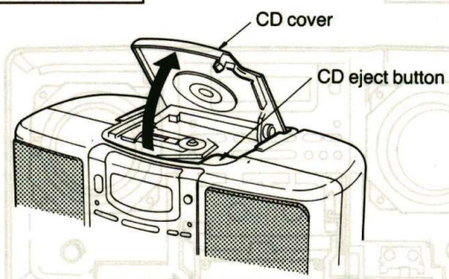

1. Press the CD eject button to open the CD cover.

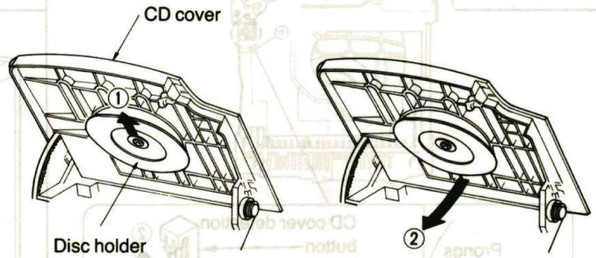

2. Slide the disc holder in the direction indicated by arrow ① and remove it in the direction indicated by arrow ②.

Ref. No. 22 — Disassembly of the Disc Holder

Procedure 21→22

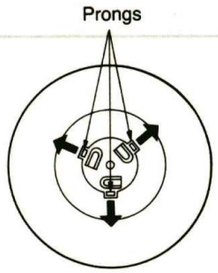

1. Unhook the three prongs in the directions indicated by the arrows.

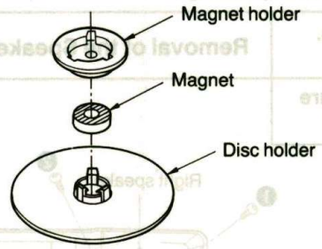

2. Disassemble the disc holder into the three parts shown above.

Ref. No. 23 — Removal of the CD Eject Button

Procedure 1→3→23

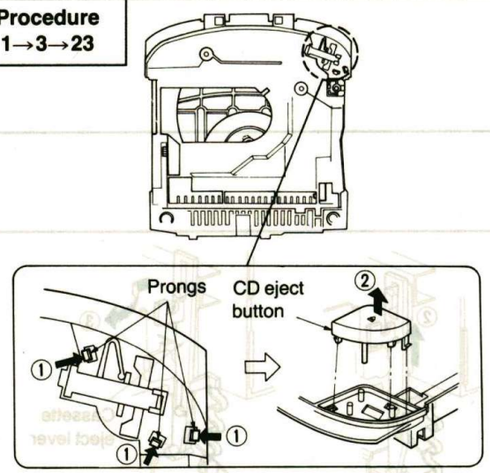

1. Unhook the three prongs in the directions indicated by arrows ①.
2. Remove the CD eject button in the direction indicated by arrow ②.

Ref. No. 24 — Removal of the CD Eject Lever

Procedure 1→3→24

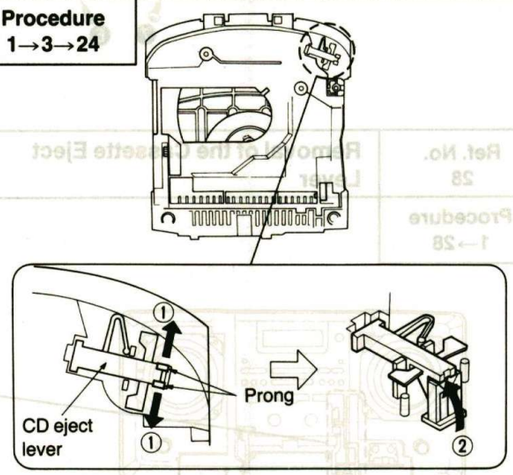

1. Unhook the two prongs in the directions indicated by arrows ①.
2. Remove the CD eject lever in the direction indicated by arrow ②.

Ref. No. 25	Removal of the CD Cover Detection Button
Procedure 1→3→25	

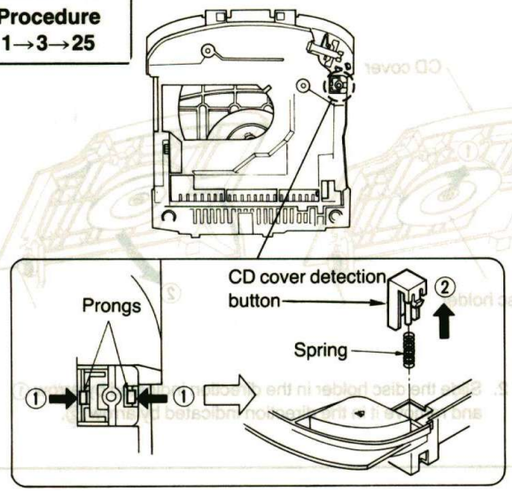

1. Unhook the two prongs in the directions indicated by arrows ①.
2. Remove the CD cover detection button in the direction indicated by arrow ②.

Ref. No. 26	Removal of the Cassette Holder
Procedure 1→26	

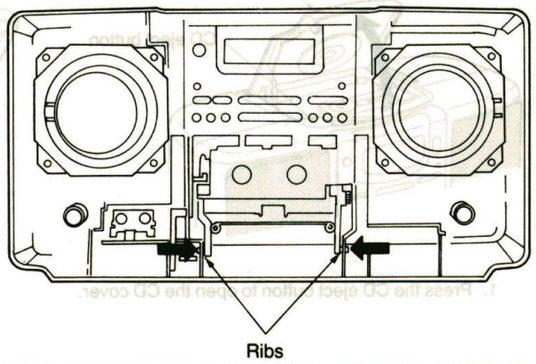

●Detach the ribs in the direction indicated by the arrows.

Ref. No. 27	Removal of the Speakers
Procedure 1→27	

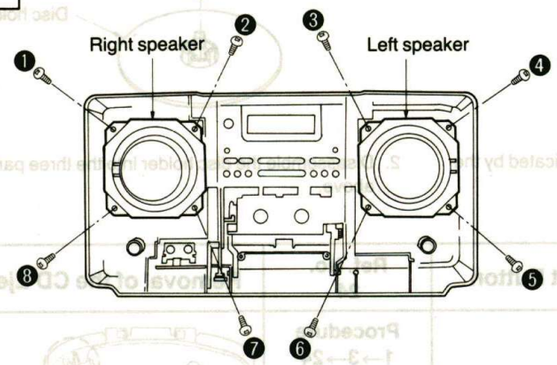

●Remove screws ❶~❽.

Ref. No. 28	Removal of the Cassette Eject Lever
Procedure 1→28	

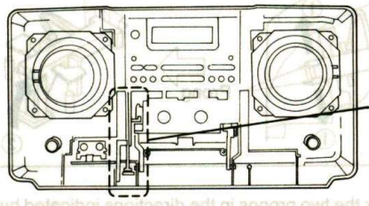

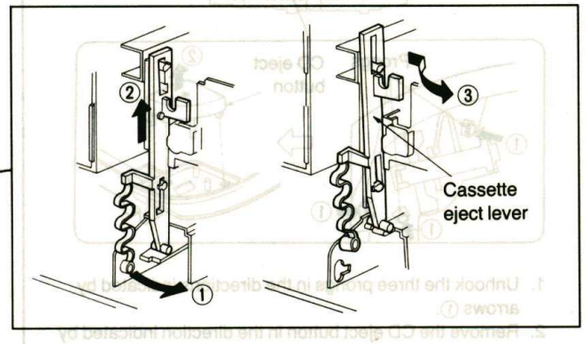

●Remove the cassette eject lever by moving it in the directions indicated by arrows ①, ②, and ③, in that order.

●Installation of the Cassette Holder

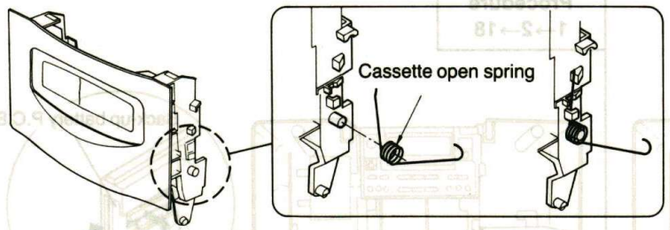

1. Attach the cassette-open spring.

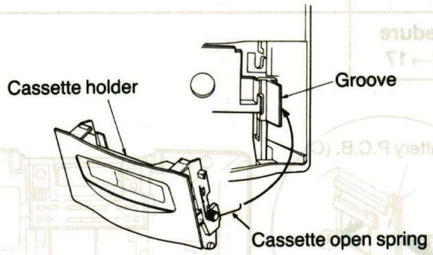

2. Install the cassette holder while aligning the end of the cassette-open spring with the groove in the cabinet.

●Installation of the CD Cover

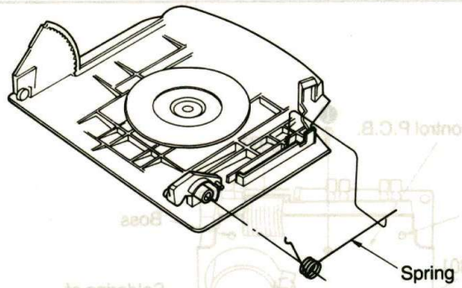

1. Attach the spring.

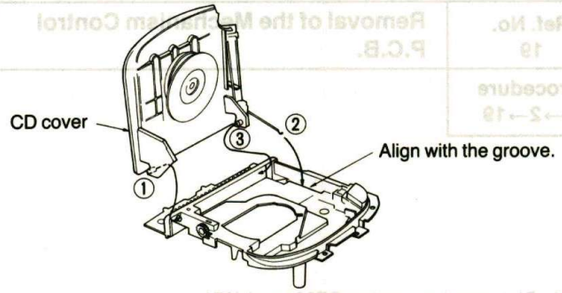

2. Install the cover in the directions indicated by the arrows ①, ②, and ③, in that order.

●If the tape has become entangled

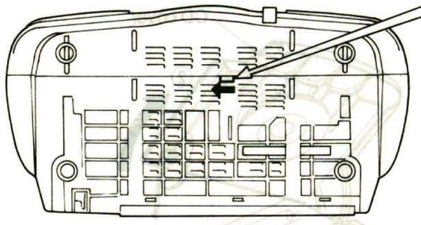

●If the tape has become entangled around the capstans, pinch rollers or other parts, and is preventing the cassette from being removed, insert a thin screwdriver or similar object through the hole provided in the bottom of the cabinet and turn the motor pulley in the direction indicated by the arrow to remove the entangled tape.

RX-DS303 RX-DS303

■ SCHEMATIC DIAGRAM •TUNER AND CD CIRCUIT

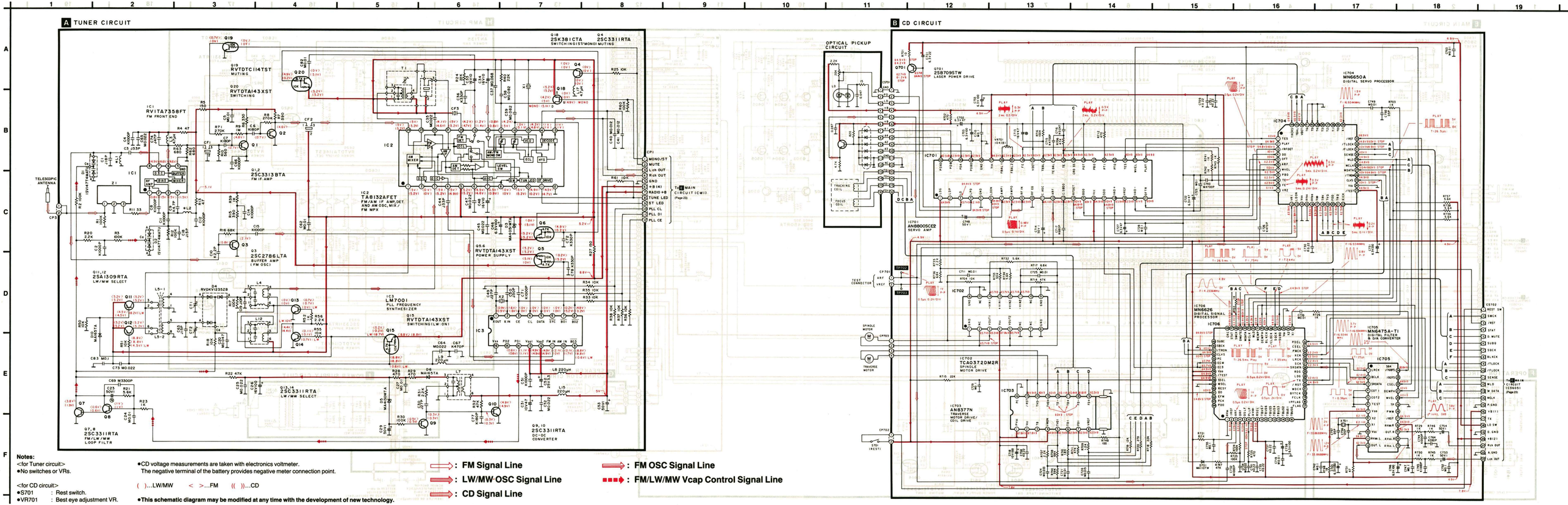

Notes:

<for Tuner circuit>
- •No switches or VRs.

<for CD circuit>
- •S701 : Rest switch.
- •VR701 : Best eye adjustment VR.

- •CD voltage measurements are taken with electronics voltmeter. The negative terminal of the battery provides negative meter connection point.
- ( )...LW/MW < >...FM (( ))...CD
- •This schematic diagram may be modified at any time with the development of new technology.

: FM Signal Line
: LW/MW·OSC Signal Line
: CD Signal Line
: FM OSC Signal Line
: FM/LW/MW Vcap Control Signal Line

■ SCHEMATIC DIAGRAM

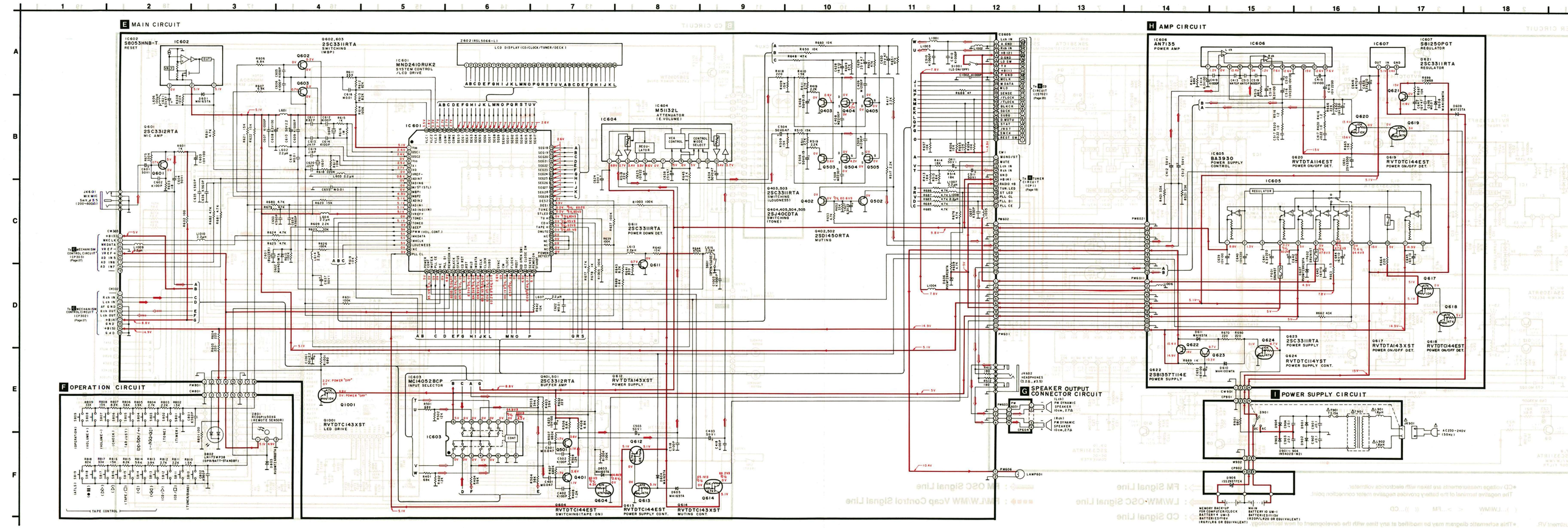

■ SCHEMATIC DIAGRAM

Notes:

- ●S601 : CD cover open/close detect switch.
- ●S801 : Timer switch. (TIMER)
- ●S802 : Tone control switch. (TONE)
- ●S803 : CD skip/search switch. (–/ ◀◀/◀◀)
- ●S804 : CD skip/search switch. (▶▶/▶▶ /+)
- ●S805 : Time adjust switch. (ADJUST)
- ●S806 : Timer check switch. (CHECK)
- ●S807 : Volume level control switch. (– VOLUME)
- ●S808 : Volume level control switch. (VOLUME +)
- ●S809 : Operation switch (OPERATION)
- ●S810 : Tuner/Band switch. (TUNER/BAND)
- ●S811 : CD mode/stop switch. (CD/■)
- ●S812 : CD play switch. (▶)
- ●S813 : Tape fast rewind switch. (◀◀)
- ●S814 : Tape reverse-side playback switch. (◀)
- ●S815 : Tape mode/stop switch. (TAPE/■)
- ●S816 : Tape forward-side playback switch. (▶)
- ●S817 : Tape fast forwad switch. (▶▶)
- ●S818 : Rec-pause switch. (●❚❚)
- ●S819 : Automatic tape level setting switch. (ATLS)
- ●S901 : AC/DC select switch.
- ●S1001 : Laser on/off switch. (for Mechanism control/Mechanism circuit)
- ●S971 : Mode detect switch.
- ●S972 : Cassette tape insertion detect switch.
- ●S973 : Record prevention tab detect switch. (REV)
- ●S974 : Record prevention tab detect switch. (FWD)
- ●S975 : No connect.
- ●S976 : No connect.
- ●VR301 : Tape speed adjustment VR.

General

●DC voltage measurements are taken with electronics voltmeter.
The negative terminal of the battery provides negative meter connection point.

No mark...TAPE PLAYBACK ⌐ ⌋...TUNER (( ))...CD [ ]...REC

●Battery current:

Vol. min	160 mA (LW/MW)	Vol. max 520 mA (LW/MW)
	162 mA (FM)	780 mA (FM)
	240 mA (TAPE)	1140 mA (TAPE)
	380 mA (CD)	1680 mA (CD)

Measurement instruction

LW/MW	: 74 dB/m, 30% Mod.
FM	: 60 dB, 30% Mod.
TAPE	: 315 Hz, 0 dB
CD	: 1 kHz, 0 dB

●Important safety notice
Components identified by ⚠ mark have special characteristics impotant for safety.
When replacing any of these componets, use only manufacturer's specified parts.

●This schematic diagram may be modified at any time with the development of new technology.

: TUNER SIGNAL LINE
: CD SIGNAL LINE
: TAPE SIGNAL LINE
: MIC SIGNAL LINE
: AF SIGNAL LINE
: REC SIGNAL LINE
: +B LINE

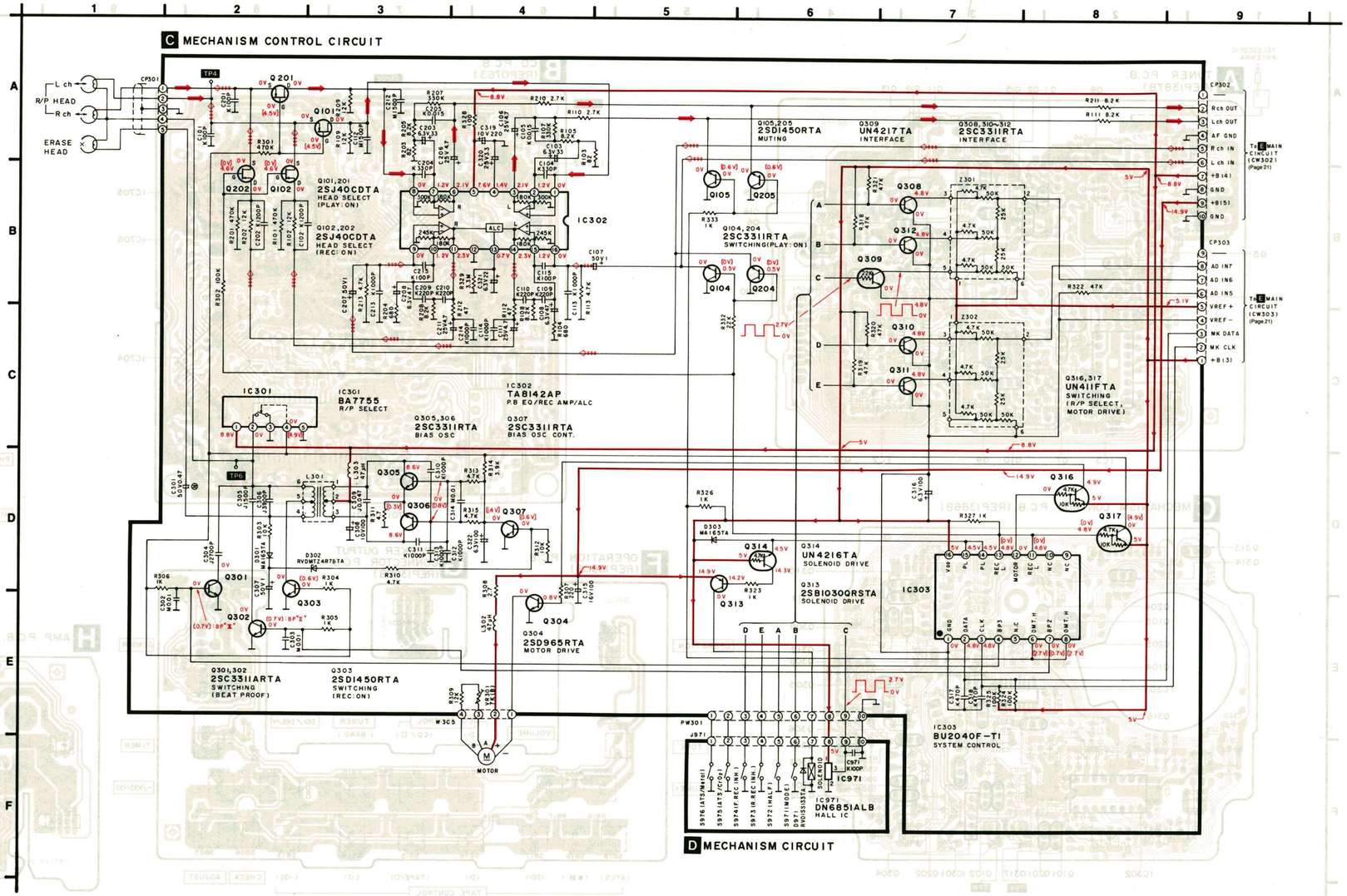

■ CIRCUIT BOARD DIAGRAM

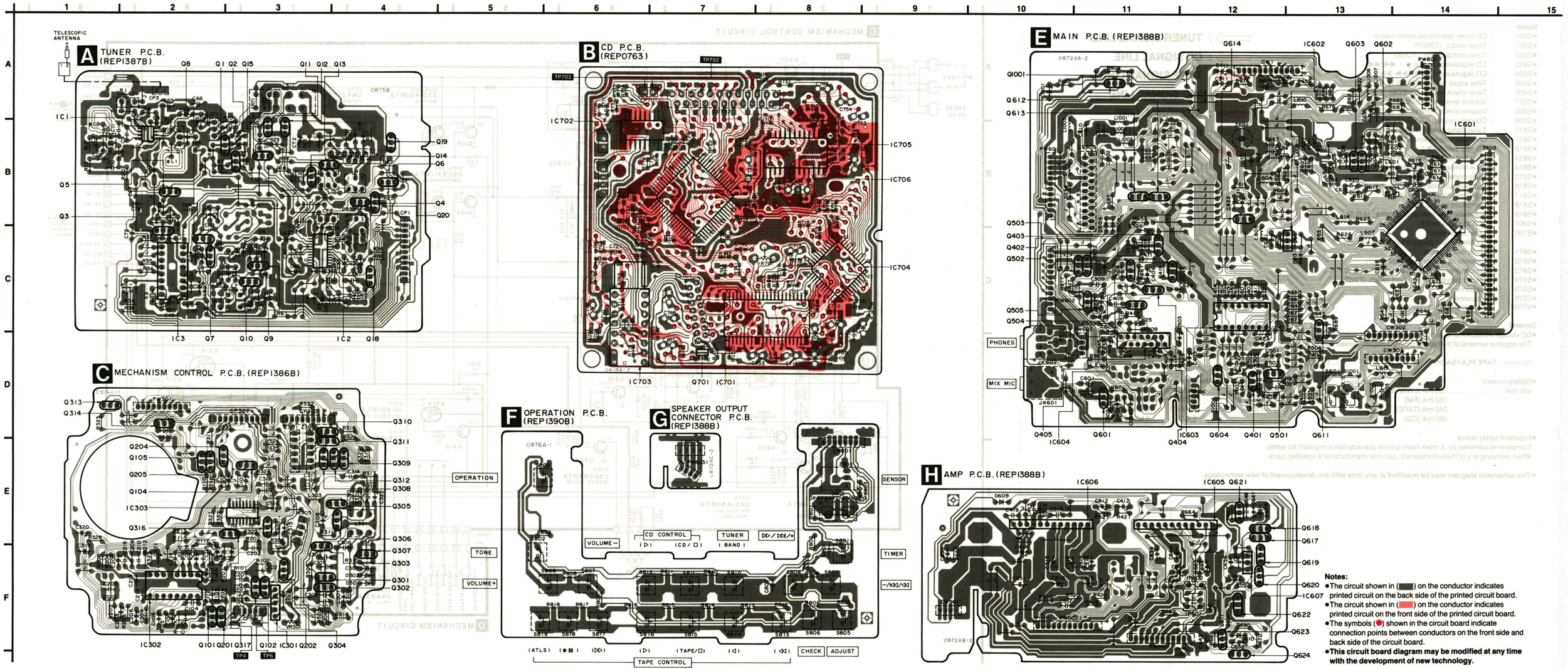

Notes:

- The circuit shown in (■) on the conductor indicates printed circuit on the back side of the printed circuit board.
- The circuit shown in (■) on the conductor indicates printed circuit on the front side of the printed circuit board.
- The symbols (●) shown in the circuit board indicate connection points between conductors on the front side and back side of the circuit board.
- **This circuit board diagram may be modified at any time with the development of new technology.**

16 17 18 19 20 21 22 23 24

I POWER SUPPLY P.C.B. (REP1389B)

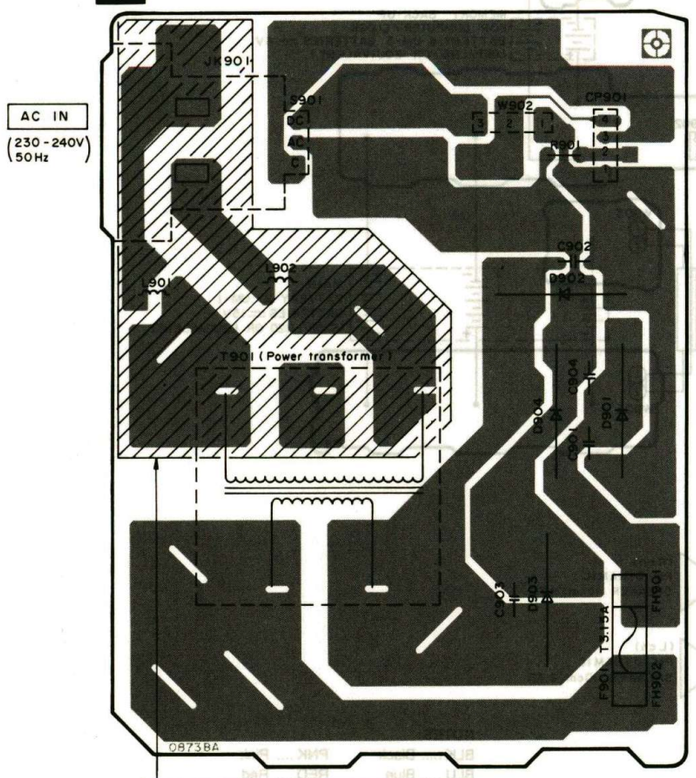

CAUTION
RISK OF ELECTRIC SHOCK
AC voltage line. Please do not touch this portion.

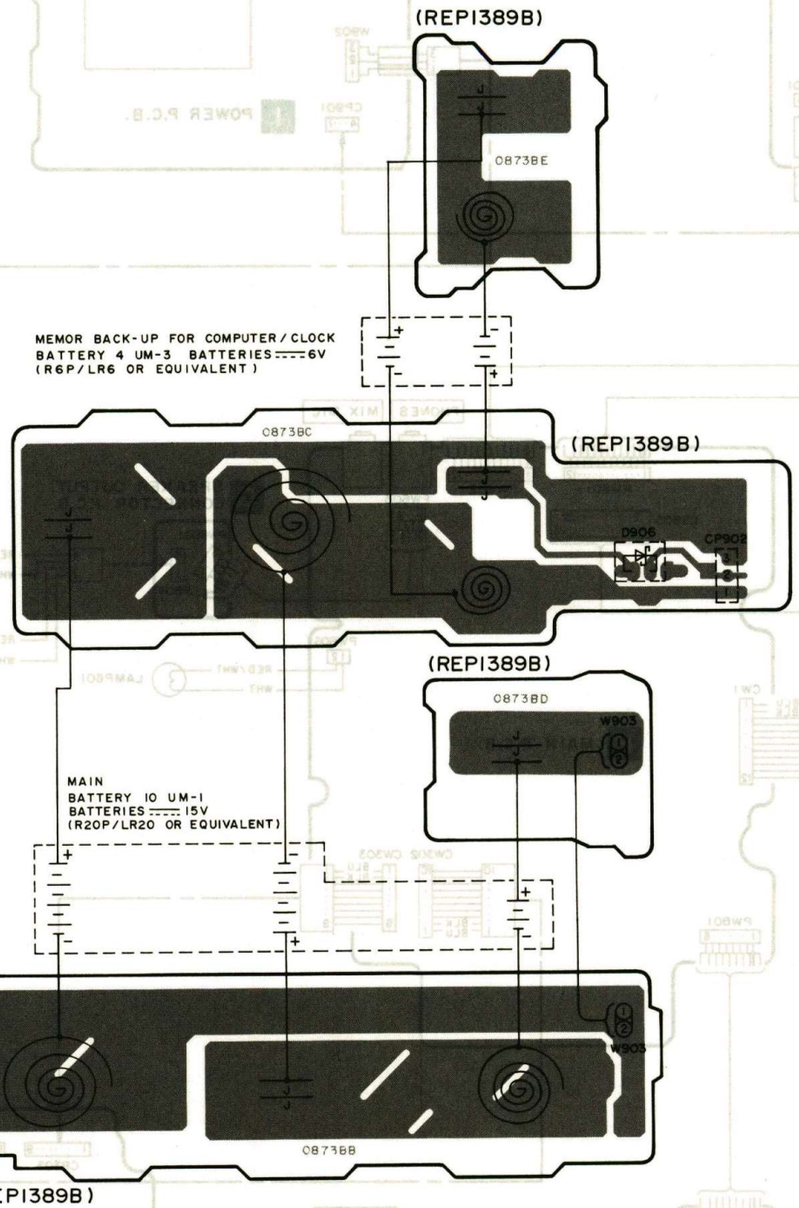

D MECHANISM P.C.B. (REP0228)

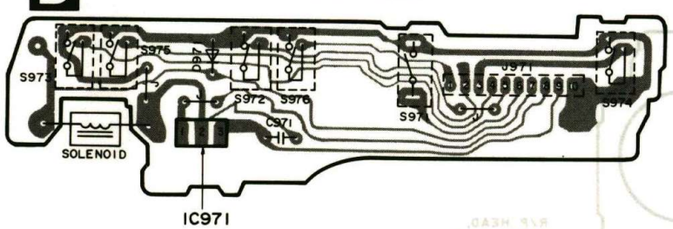

RVITA7358FT	8 Pin	TA8132AFET	24Pin
BU2040F-T1	16Pin	AN8800SCE2	42Pin
TCA0372DM2R	16Pin		
MN6475-T1	24Pin		

TA8142AP

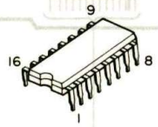

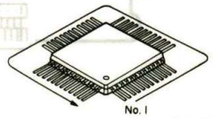

MN6650A	44Pin
MN6626	64Pin
MND2410RUK2	100Pin

LM7001

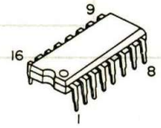

MC14052BCP

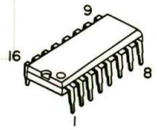

AN8377N

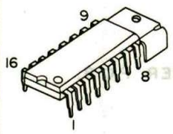

BA7755

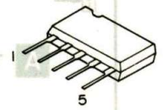

M51132L

AN7135

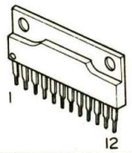

BA3930

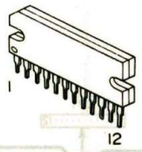

S8053HNB-T

S81250PGT

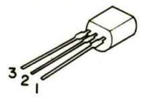

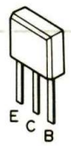

UN411FTA
UN4216TA
UN4217TA
2SB1030QRSTA
2SC3311AR
2SC3311R

2SC3312RTA
2SC3313B
2SC2786LTA
2SD1450RTA

DN6851ALB

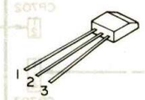

2SD965Q

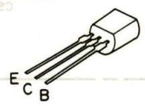

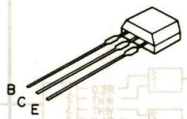

RVTDTA114SET
RVTDTC114YST
RVTDTA143XST
RVTDTC143XST
RVTDTC144EST

2SB1357T114E

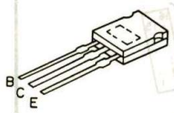

2SJ40CDTA
2SK381CTA

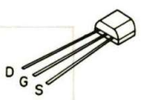

2SB709S

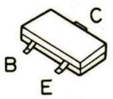

MA165
MA723TA
RVD1SS133TA

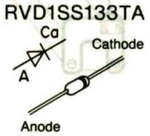

RVDMTZ4R7BTA
RVDMTZ8R2BTA

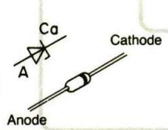

MA4100MTA
MA4130M

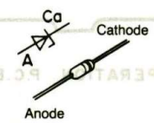

MA4051MTA

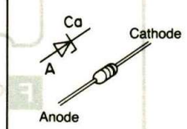

1N5402B-M21

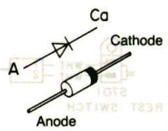

MA110TW

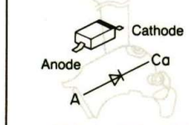

1SS293TPE4

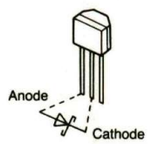

■ WIRING CONNECTION DIAGRAM

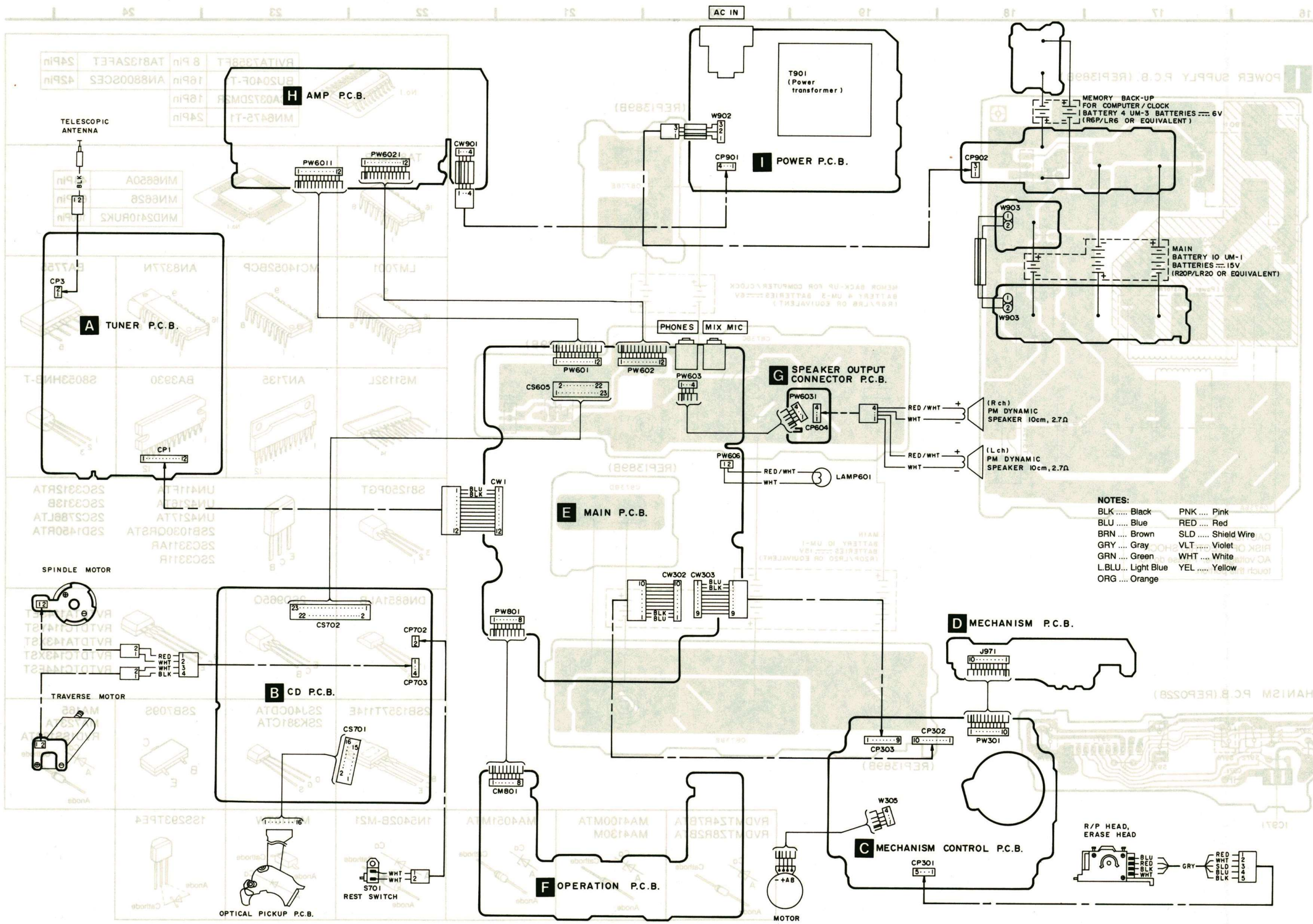

■ OUTLINE OF THE DIGITAL SERVO

•The servo circuit used in the CD section employs a newly developed digital servo system in place of the analog servo system which was used in previous models.
For an outline of this new digital servo, refer to pages 43 and 44 of Service Manual RX-DT505 (EB) (EG), Order No. AD9204111C2.

■ WIRING CONNECTION PROCEDURES FOR USE DURING CHECKING AND ADJUSTMENT OF THE PCBs

•To obtain audio output during checking and adjustment of the PCBs, prepare a jig as shown below and obtain the audio output via the headphone jack.

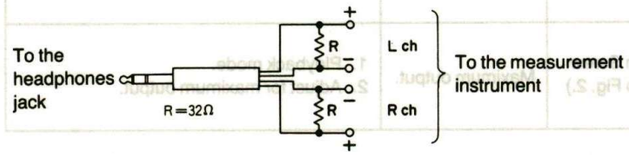

•To obtain audio output through the speakers without using a headphones jack output jig, connect as shown below.

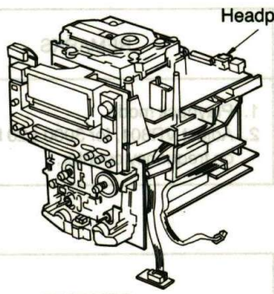

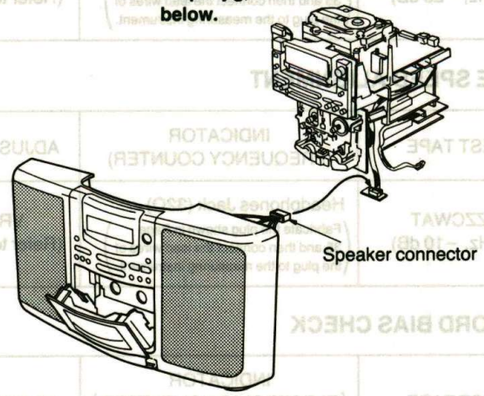

•Checking and adjustment of the tuner P.C.B.

1. Use Ref. No. 1 of the disassembly instructions (see page 8) to remove the front cabinet.

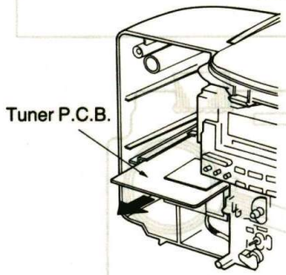

2. Pull out the tuner P.C.B.

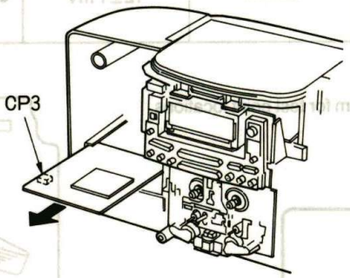

3. Disconnect connector CP3.

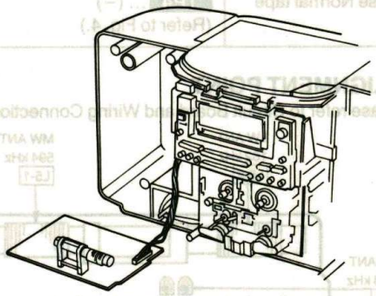

4. Position as shown in the diagram above.

•Checking and adjustment of the tape deck P.C.B.

1. Use Ref. No. 1 of the disassembly instructions (see page 8) to remove the front cabinet.

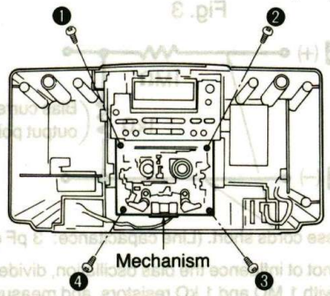

2. Remove screws ❶~❹.
3. Pull out the mechanism.

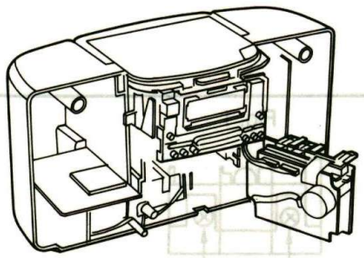

4. Position as shown in the diagram above.

■ Checking and adjustment of the CD P.C.B.

•The extension cables shown below are needed to check and adjust the CD P.C.B.

•Extension cable kit model No.: RFKZ0009 (one set of two extension cables)

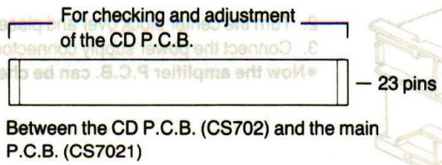

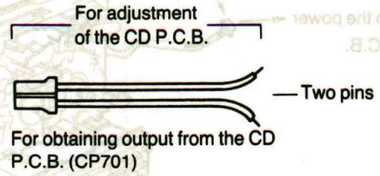

1. Use Ref. No. 3 of the disassembly instructions (see page 9) to remove the top cabinet.
2. Use Ref. No. 6 of the disassembly instructions (see page 10) to remove the handle.

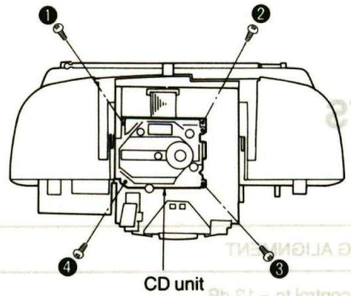

3. Remove screws ❶~❹.

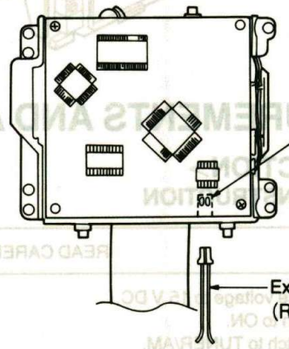

4. Connect extension cable RFKZ0009 to connector CP701.

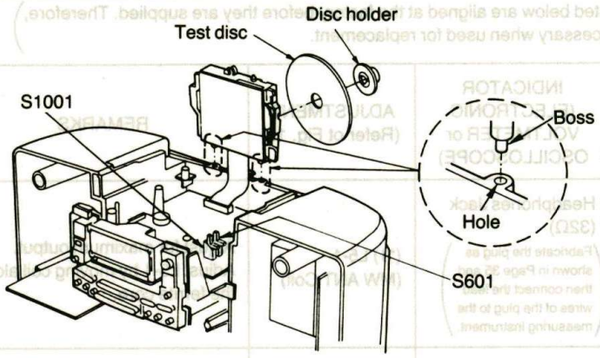

5. Fit the two bosses on the chassis of the CD unit into the holes in the cabinet and stand the CD unit upright.
6. Use the disc holder to secure the test disc on the CD unit.
7. Switch on switches S601 and S1001.

•Now the CD P.C.B. can be checked and adjusted.

•Checking of the main P.C.B.

1. Use Ref. No. 4 of the disassembly instructions (see page 9) to remove the operation P.C.B.
2. Use Ref. No. 12 of the disassembly instructions (see page 11) to remove the main P.C.B.

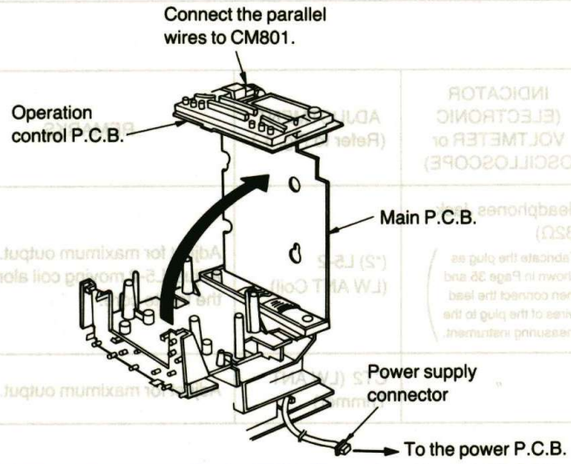

3. Raise the main control P.C.B.
4. Connect the operation P.C.B.
5. Connect the power supply connector to the power P.C.B.

•Now the main P.C.B. can be checked.

•Checking of the amplifier P.C.B.

1. Use Ref. No. 11 of the disassembly instructions (see page 11) to remove the center block.

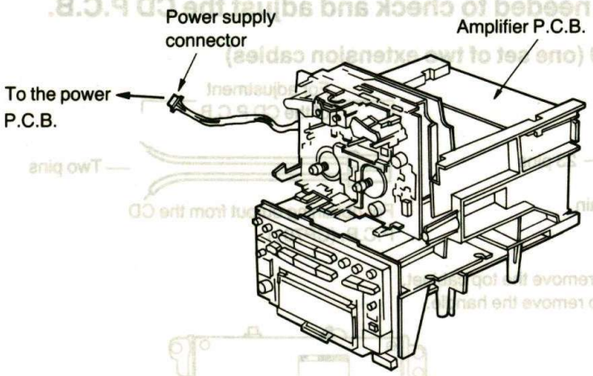

2. Turn the center block over and place it upside down.
3. Connect the power supply connector to the power P.C.B.

•Now the amplifier P.C.B. can be checked.

■ MEASUREMENTS AND ADJUSTMENTS

<TUNER SECTION>

•ALIGNMENT INSTRUCTION

READ CAREFULLY BEFORE ATTEMPTING ALIGNMENT	
•Set power source voltage to 15 V DC. •Set power switch to ON. •Set function switch to TUNER/AM.	•Set volume control to −12 dB. •Output of signal generator should be no higher than necessary to obtain an output reading.

•MW-RF ALIGNMENT

(The parts other than the ones listed below are aligned at the factory before they are supplied. Therefore, alignment of those parts is unnecessary when used for replacement.)

SIGNAL GENERATOR or SWEEP GENERATOR		RADIO DIAL SETTING	INDICATOR (ELECTRONIC VOLTMETER or OSCILLOSCOPE)	ADJUSTMENT (Refer ot Fig. 1.)	REMARKS
CONNECTIONS	FREQUENCY				
Fashion a loop of several turns of wire and radiate a signal into the loop ant. of receiver.	594 kHz	Tune to signal	Headphones Jack (32Ω) (Fabricate the plug as shown in Page 35 and then connect the lead wires of the plug to the measuring instrument.)	(*1) L5-1 (MW ANT Coil)	Adjust for maximum output. Adjust L5-1 by moving coil along the ferrite core.
"	1503 kHz	"	"	CT1 (MW ANT Trimmer)	Adjust for maximum output.
(*1) Fix antenna coil with wax after completing alignment.					

•LW-RF ALIGNMENT

SIGNAL GENERATOR or SWEEP GENERATOR		RADIO DIAL SETTING	INDICATOR (ELECTRONIC VOLTMETER or OSCILLOSCOPE)	ADJUSTMENT (Refer to Fig. 1.)	REMARKS
CONNECTIONS	FREQUENCY				
Fashion a loop of several turns of wire and radiate a signal into the loop ant. of receiver.	162 kHz	Tune to signal	Headphones Jack (32Ω) (Fabricate the plug as shown in Page 35 and then connect the lead wires of the plug to the measuring instrument.)	(*2) L5-2 (LW ANT Coil)	Adjust for maximum output. Adjust L5-2 moving coil along the ferrite core.
"	270 kHz	"	"	CT2 (LW ANT Trimmer)	Adjust for maximum output.
(*2) Fix antenna coil with wax after completing alignment.					

<CASSETTE DECK SECTION>

•ALIGNMENT INSTRUCTION

READ CAREFULLY BEFORE ATTEMPTING ALIGNMENT	
•Set power source voltage to 15 V DC. •Set power switch to ON. •Set function switch to TAPE.	•Set volume control to −12 dB. •Output of signal generator should be no higher than necessary to obtain an output reading.

•HEAD AZIMUTH ALIGNMENT

TEST TAPE	INDICATOR (ELECTRONIC VOLTMETER or OSCILLOSCOPE)	ADJUSTMENT	SPECIFICATION	REMARKS
QZZCFM (8 kHz, −20 dB)	Headphones Jack (32Ω) (Fabricate the plug shown in Page 35 and then connect the lead wires of the plug to the measuring instrument.)	Azimuth Screw (Refer to Fig. 2.)	Maximum output.	1. Playback mode. 2. Adjust for maximum output.

•TAPE SPEED ALIGNMENT

TEST TAPE	INDICATOR (FREQUENCY COUNTER)	ADJUSTMENT	SPECIFICATION	REMARKS
QZZCWAT (3 kHz, −10 dB)	Headphones Jack (32Ω) (Fabricate the plug shown in Page 35 and then connect the lead wires of the plug to the measuring instrument.)	VR301 (Refer to Fig. 3.)	3000±20 Hz	1. Playback mode. 2. Adjust VR301, for 3000±20 Hz reading on frequency counter.

•RECORD BIAS CHECK

TEST TAPE	INDICATOR (ELECTRONIC VOLTMETER or OSCILLOSCOPE)	ADJUSTMENT	SPECIFICATION	REMARKS
Use Normal tape	TP6 ... (+) TP4 ... (−) (Refer to Fig. 4.)	——	12±1 mV	•Record mode

•ALIGNMENT POINT

•Please refer to Circuit Board and Wiring Connection Digram for test point locations.

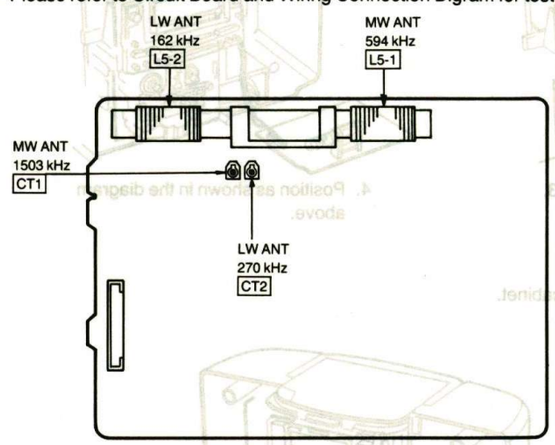

Fig. 1

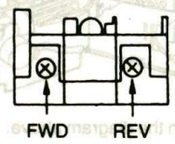

Fig. 2

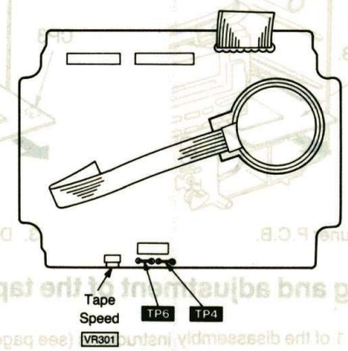

Fig. 3

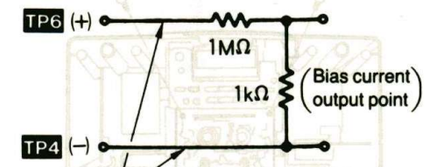

Keep these cords short. (Line capacitance: 3 pF of less)

•In order not ot influence the bias oscillation, divide the voltage with 1 MΩ and 1 kΩ resistors, and measure the voltage across the 1 kΩ resistor.

Fig. 4

<CD SECTION>

Caution:
- It is very dangerous to look at or touch the laser beam. (Laser radiation is invisible.) With the unit turned "on", laser radiation is emitted from the pickup lens. Avoid exposure to the laser beam, especially when performing adjustments.

Measuring Instruments and Special Tools

- Test disc
  1. Playability test disc (SZZP1054C)
  2. Uneven test disc (SZZP1056C)
- Allen wrench (M2.0) (SZZP1101C)
- Oscilloscope

(1) MECHANICAL ADJUSTMENT

- When the traverse deck is replaced, making adjustments is not necessary. (The traverse deck ass'y is already adjusted.)
- Make adjustments to improve playability when the traverse deck has not been replaced. Make the electrical adjustments first.

1. Connect the oscilloscope's CH. 1 probe across **TP702** (+) and **TP703** (V-REF) on the Servo P.C.B.
   Oscilloscope setting:
   VOLT ..... 200 mV
   SWEEP ..... 0.5 µsec
   Input coupling ..... AC
2. Switch the player power **ON**, and play track **19** on the test disc (SZZP1056C).
3. Leave the player in Play mode and place it as shown in the figure on the right.
4. Alternately adjust the two mechanical adjusting screws with the 2.0 mm allen wrench (SZZP1101C) until the RF signal amplitude variation on the oscilloscope is minimized. (Shown in Fig. 6)
5. After completing the adjustment, lock the **mechanical adjustments** with lock paint (RZZOL01).

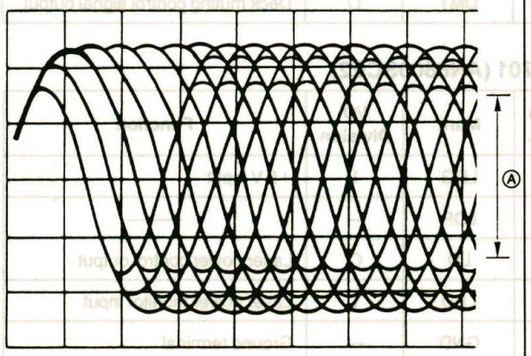

Ⓐ Minimize the variation of amplitude.

(2) BEST EYE (PD BALANCE) ADJUSTMENT

1. Connect the oscilloscope's CH. 1 probe across **TP702** (+)and **TP703** (V-REF) on the Servo P.C.B.
   Oscilloscope setting:
   VOLT ..... 200 mV
   SWEEP ..... 0.5 µsec
   Input coupling ..... AC
2. Switch the player power **ON**, and play the 1 kHz (track 1) on test disc (SZZP1054C).
3. Adjust **VR701** until the RF signal eye pattern amplitude is maximized.

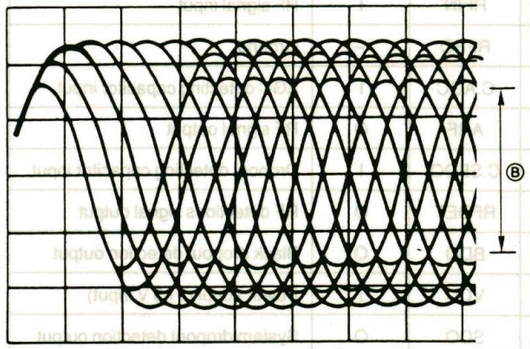

Ⓑ Maximize the amplitude

(3) CHECK OF PLAY OPERATION AFTER ADJUSTMENT

•Checking Skip Search
1. Play an ordinary musical program disc.
2. Press the skip button to check for normal skip search operation (in both the forward and reverse directions).

•Checking Manual Search
1. Play an ordinary musical program disc.
2. Press the manual search button to check for smooth manual search operations at either low or high speed (in both the forward and reverse directions).

•Checking Playability
1. Play the 0.7 mm black dot and the 0.7 mm wedge on the test disc (SZZP1054C) and verify that no sound skip or noise occurs.
2. Play the middle tracks of the uneven test disc and verify that no sound skip or noise occurs.

•ALIGNMENT POINT

- Please refer to Circuit Board and Wiring Connection Diagram for test point locations.

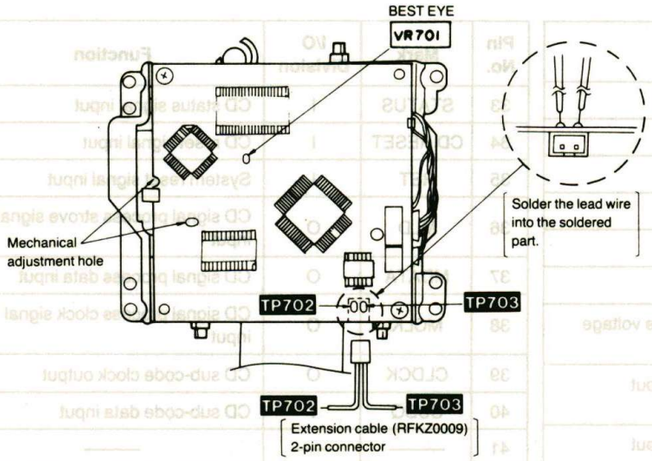

Fig. 5

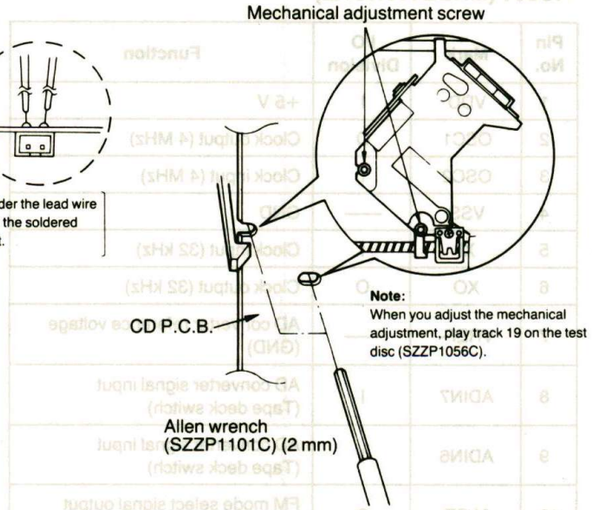

Fig. 6

■ FUNCTION OF IC TERMINALS

•IC601 (MND2410RUK2)

Pin No.	Mark	I/O Division	Function
1	VDD	I	+5 V
2	OSC1	O	Clock output (4 MHz)
3	OSC2	I	Clock input (4 MHz)
4	VSS	——	GND
5	XI	I	Clock input (32 kHz)
6	XO	O	Clock output (32 kHz)
7	VREF-	——	AD converter reference voltage (GND)
8	ADIN7	I	AD converter signal input (Tape deck switch)
9	ADIN6	I	AD converter signal input (Tape deck switch)
10	M/ST	O	FM mode select signal output (L: STEREO H: MONO)
11	MBP1	O	Beat proof control signal output
12	MBP2		
13 ~ 15	ADIN2 ~ ADIN0	I	AD converter signal input (Operation control switch)
16	VREF+	I	AD converter reference voltage (VDD)
17	TONE1	O	Tone control signal output
18	TONE2		
19	BEEP	O	Beep signal output
20	PWM	O	Electric volume control signal output
21	MKDATA	O	Deck control data output
22	MKCLK	O	Deck control clock output
23	LOUDNESS	O	Audio signal control output
24	NC	——	——
25	PLL CL	O	PLL tuner clock signal output
26	POWER CONT	O	Power supply circuit control
27	MUTE A	O	Muting control signal output
28	PLL CE	O	PLL tuner strove signal output
29	NC	——	——
30	PLL DI	O	PLL tuner control data signal output
31	REMOCON IN	I	Remote control signal input
32	BLKCK	I	Sub code block clock input

Pin No.	Mark	I/O Division	Function
33	STATUS	I	CD status signal input
34	CD RESET	I	CD reset signal input
35	RST	I	System reset signal input
36	MLD	O	CD signal process strove signal input
37	MDATA	O	CD signal process data input
38	MCLK	O	CD signal process clock signal input
39	CLDCK	O	CD sub-code clock output
40	SUBQ	I	CD sub-code data input
41	——	——	——
42	SYNC	——	——
43	CM	——	——
44	TLOCK	I	CD tracking signal input
45	FLOCK	I	CD focus lock signal input
46	CD REST SW	I	Rest switch signal input
47	CD OPEN SW	I	Disc tray open detection switch signal input
48	CD CLOSE SW	I	Disc tray close detection switch signal input
49	SENSE	I	CD sense signal input
50	REM STBY	I	Remote control sensor power control
51	POWER DET	I	Power detection signal input
52 ~ 55	——	——	——
56	DMUTE	O	Muting control signal output
57	TAPE H	O	Function signal output (TAPE: H)
58	CD H	O	Function signal output (CD: H)
59	TUH	O	Function signal output (TUNER: H)
60	STLED	I	FM stereo signal input
61	TUNE	I	Tuning signal input
62	DES1	——	——
63	DES2		
64 ~ 93	SEG29 ~ SEG0	O	LCD segment signal output
94 ~ 97	COM3 ~ COM0	O	LCD common signal output
98 ~ 100	VLC3 ~ VLC1	I	LCD bias reference voltage input

•IC303 (BU2040F)

Pin No.	Mark	I/O Division	Function
1	GND	——	GND
2	DATA	I	Deck control data input
3	CLK	I	Deck control clock input
4	BP3	——	——
5	NC	——	——
6	DMT.H	O	Deck muting control signal output
7	BP2	O	Beat proof control signal output
8	DMT	O	Deck muting control signal output
9	NC	——	——
10	NC	——	——
11	REC L	O	Recording control signal output
12	MOTOR	O	Motor control signal output
13	REC L	O	Recording control signal output
14	PL	O	Plunger control signal output
15	PL	O	Plunger control signal output
16	VDD	I	+5 V

•IC701 (AN8800SCE2)

Pin No.	Mark	I/O Division	Function
1	LDG	I	+5 V input
2	LDP	—	——
3	LD	O	Laser power control output
4	LPD	I	Laser power monitor input
5	GND	—	Ground terminal
6	LDON	I	Laser power control input
7	AMPI	I	RF signal input
8	AMPO	O	RF signal output
9	RFIN	I	RF signal input
10	RFEQ	—	Ground
11	C.AGC	I	AGC detecting capacitor input
12	ARF	O	RF signal output
13	C.SBDO	I	Dropout detecting capacitor input
14	RFDET	O	RF detections signal output
15	BDO	O	Black dropout detection output
16	VCC	I	Power supply (+5 V input)
17	SDO	O	System dropont detection output
18	VAD+	O	A/D converter reference voltage output
19	VREF	O	Reference voltage output
20	VAD–	O	A/D converter reference voltage output
21	OFTR	O	Off track detection output

Pin No.	Mark	I/O Division	Function
22	PLAY	I	Play signal input
23	WVEL	I	High speed signal input
24	TES	I	Tracking error signal input
25	PTO	—	——
26	PTI	I	Traverse speed detection signal input
27	PBO	—	——
28	POT	I	Position detecting buffer input
29	CROSS	O	Tracking error cross detection output
30	TE	O	Tracking error output
31	TEBAL	I	Tracking error gain detecting filter input
32	TBAL	I	Tracking balance adjustment
33	VDET	O	Vibration detection signal ouput
34	FE	O	Focus error output
35	FBAL2	I	Focus balance adjustment
36	FBAL2		
37	VCC	I	Power supply (+5 V input)
38	GND	—	Ground
39	PDBD	I	Photo detector current input
40	PDA	I	
41	PDB	I	
42	PDAD	I	

•IC702 (TCA0372DM2R)

Pin No.	Mark	I/O Division	Function
1	GND	—	GND
2	NC	—	—
3	VOUT1	O	Spindle motor control
4	VCC	I	+7.5 V
5	VOUT2	O	Spindle motor control
6	NC	—	GND
7	NC	—	GND
8	GND	—	GND
9	GND	—	GND
10	NC	—	GND
11	−VIN2	I	Spindle motor control
12	+VIN2	I	Spindle motor control
13	+VIN1	I	Spindle motor control
14	−VIN1	I	Spindle motor control
15	NC	—	GND
16	GND	—	GND

•IC703 (AN8377N): Motor Dirve

Pin No.	Mark	I/O Division	Function
1	PVCC	I	Driver power supply (+8.9 input)
2	VCC	I	Power supply (+8.9 V input)
3	TB	O	External transistor base driving output
4	VMON	O	Voltage output
5	TVDI	I	Traverse error signal input
6	TDI	I	Focus error signal input
7	FDI	I	Tracking error signal input
8	VREF	I	Reference voltage input
9	FD+	O	Non-inverting output of focus driver
10	FD−	O	Inverting output of focus driver
11	TD+	O	Non-inverting output of tracking driver
12	TD−	O	Inverting output of tracking driver
13	TVD+	O	Inverting output of traverse driver
14	TVD−	O	Non-inverting output of traverse driver
15	RESET	O	Reset signal output
16	PC	I	PC input (connect to GND)

•IC705 (MN6475A-T1)

Pin No.	Mark	I/O Division	Function
1	LRCK	I	Clock input
2	BCLK	I	Serial data bit clock input
3	SRDATA	I	Serial data input
4	COT1	—	Ground
5	COT2		
6	TEST		
7	VDD	I	Power supply (+5 V input)
8	X2	—	Clock (f=33.8688 MHz)
9	X1		
10	VSS	—	Ground
11	AVDDL	I	Power supply (+5 V input)
12	OUT.L	O	AF signal output (Lch)
13	AVSS.L	—	Ground
14	AVSS.R	—	Ground
15	OUT.R	O	AF signal output (Rch)
16	AVDD.R	I	Power supply input
17	/RST	I	Reset signal input
18	PWM	—	—
19	TP	—	Ground
20	WVEL	I	High speed status signal input
21	DEMPH	I	De-emphasis signal input
22	CSEL	I	+5 V input
23	192FS	—	—
24	768FS	O	Clock output (f=16.9344 MHz)

•IC704 (MN6650A)

Pin No.	Mark	I/O Division	Function
1	TES	O	Tracking error signal output
2	PLAY	O	Play signal output
3	/RFDET	I	RF detection signal input
4	DO	I	Dropout signal input
5	OFT	I	Off track signal input
6	ARF	I	RF signal input
7	WVEL	O	High speed status signal output
8	PBO	I	Potension buffer signal input
9	TE	I	Tracking error signal input
10	FE	I	Focus error signal input
11	VR2	I	A/D reference voltage input
12	VR1	I	A/D reference voltage input
13	LDON	O	Laser power control signal output
14	VSS	—	Ground
15	AVSS	—	Ground
16	AVDD	I	Power supply (+5 V input)
17	VDD	I	Power supply (+5 V input)
18	TRV	O	Traverse servo control output
19	TVD	O	Traverse drive output
20	FOD	O	Focus drive output
21	TRD	O	Tracking drive output
22	KICK	O	Track kick signal output
23	/TEST	I	+5 V input
24	VSS	—	Ground
25	CLVS	I	Spindle servo signal input
26	/TRON	O	Tracking servo signal output
27	MDATA	I	Command data input
28	MCLK	I	Command clock signal input
29	MLD	I	Command load signal input
30	SENSE	O	Sense signal output
31	/FLOCK	O	Focus servo signal output
32	/TLOCK	I	Tracking servo signal output
33	/RST	I	Reset signal input (L: Reset)
34	XI	I	Clock input (fXI=16.9344 MHz)
35	TO	—	Open
36	T1		
37	T2		
38	T3		
39	T4	—	Ground
40	T5		
41	T6		
42	VDET	I	Vibration detecting signal input
43	TBAL	O	Tracking balance adjustment output
44	TRCRS	I	Track cross signal input

•IC706 (MN6626)

Pin No.	Mark	I/O Division	Function
1	AVSS	—	Ground
2	IREF	I	Reference current input
3	ARF	I	RF signal input
4	DRF	I	DSL bias input
5	DSLF	O	DSL loop filter
6	PLLF	I	PLL loop filter
7	AVDD	I	Power supply (+5 V input)
8	RSEL	I	+5 V input
9 ~ 16	TBUS7 ~ TBUS0	—	Test terminal (Ground)
17	FLAG	—	———
18	IPFLAG		
19	FCLK		
20	BTYCK		
21	WDCK		
22	/RST	I	Reset signal input
23	TX	O	Digital audio interface signal output
24	LDG	—	———
25	RDG		
26	SRDATA	O	Serial data output
27	SCK	O	Serial bit clock output
28	LRCK	O	Clock output
29	XCK	O	Clock output (f=16.9344 MHz)
30	PMCK	—	———
31	CSEL	I	+5 V input
32	PSEL	—	Ground
33	×1	I	Clock input (f=16.9344 MHz)
34	×2	—	———
35	VSS	—	Ground

Pin No.	Mark	I/O Division	Function
36	SUBQ	O	Sub-code (Q data) output
37	SQCK	I	Sub-code (Q data) clock input f=7.3 kHz
38	/CLDCK	—	———
39	BLKCK	O	Sub-code block (Q data) clock f=75 Hz
40	DEMPH	O	De-emphasis ON signal output
41	MEMP	I	Enphasis signal input
42	MLD	I	Command load signal input
43	MCLK	I	Command clock signal input
44	MDATA	I	Command data input
45	DMUTE	I	Muting control signal input
46	SMCK	O	Clock output (f=4.2336 MHz)
47	STAT	O	Status signal output
48	CRC	—	———
49	SUBC	—	———
50	SBCK	I	Clock for sub-code serial output
51	/TRON	I	Tracking servo ON signal input
52	CLVS	O	Spindle servo signal output
53	PC	—	———
54	ECM	O	Spindle motor control signal output
55	ECS	O	Spindle motor control signal output
56	VDD	I	Power supply (+5 V input)
57	/TEST	I	+5 V input
58	SSEL	I	+5 V input
59	MSEL	—	———
60	RESY	—	———
61	DO	I	Drop out signal input
62	EFM	—	———
63	PCK		
64	PDO		

■ LCD

•SEGMENT

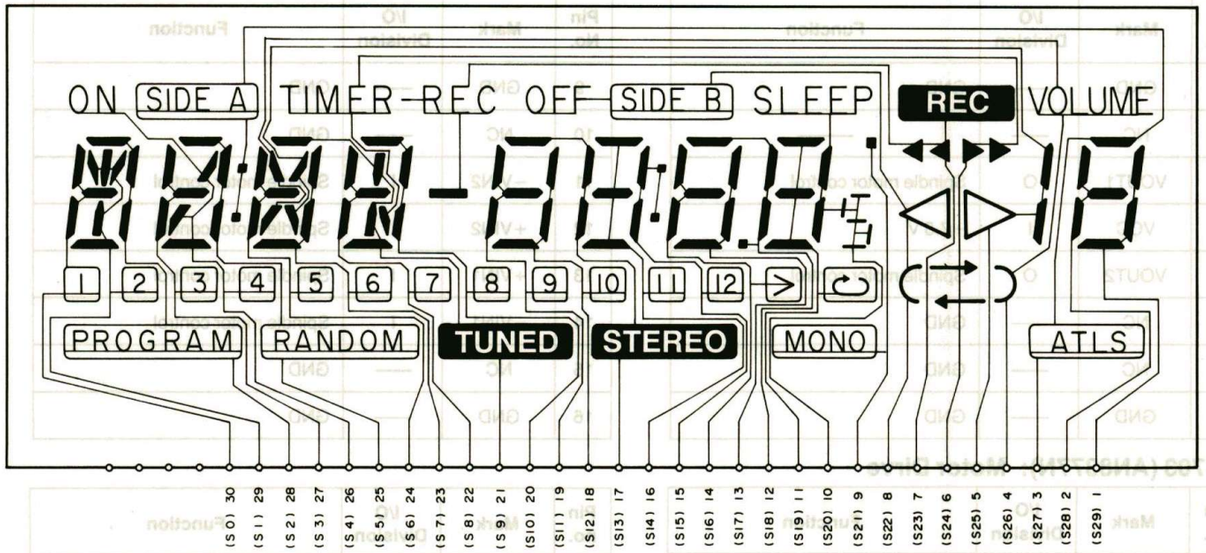

•COMMON

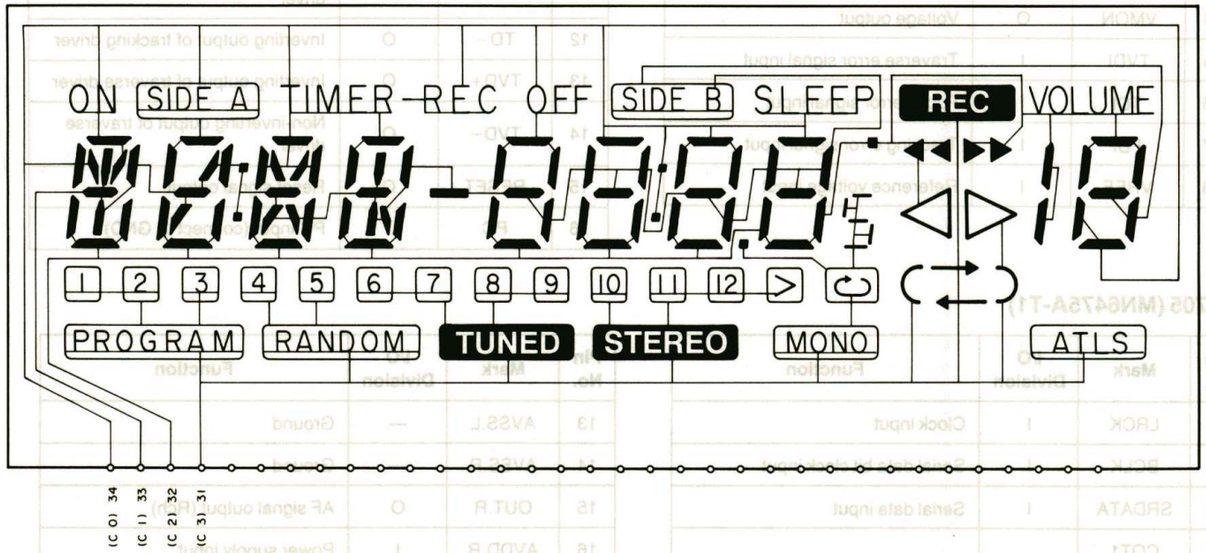

■ BLOCK DIAGRAM

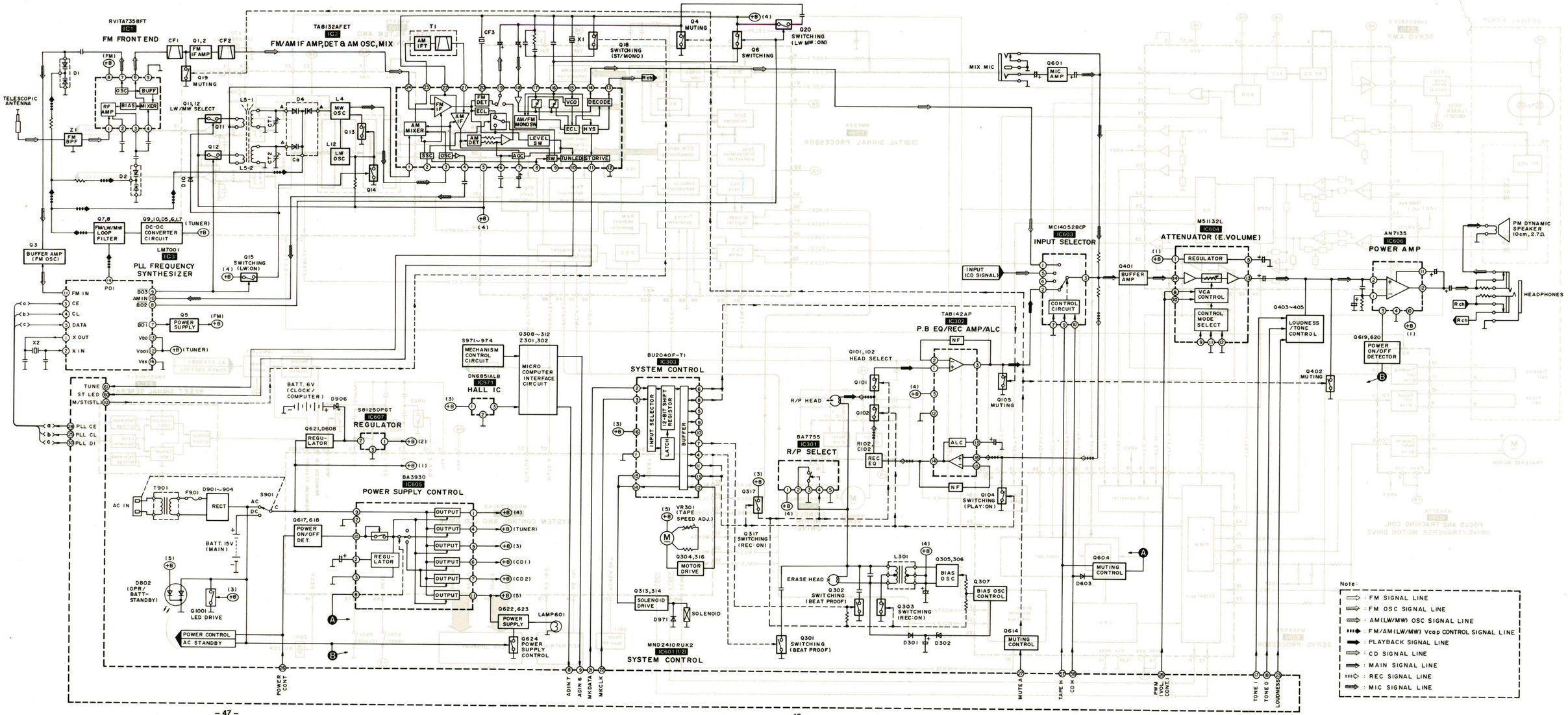

■ BLOCK DIAGRAM

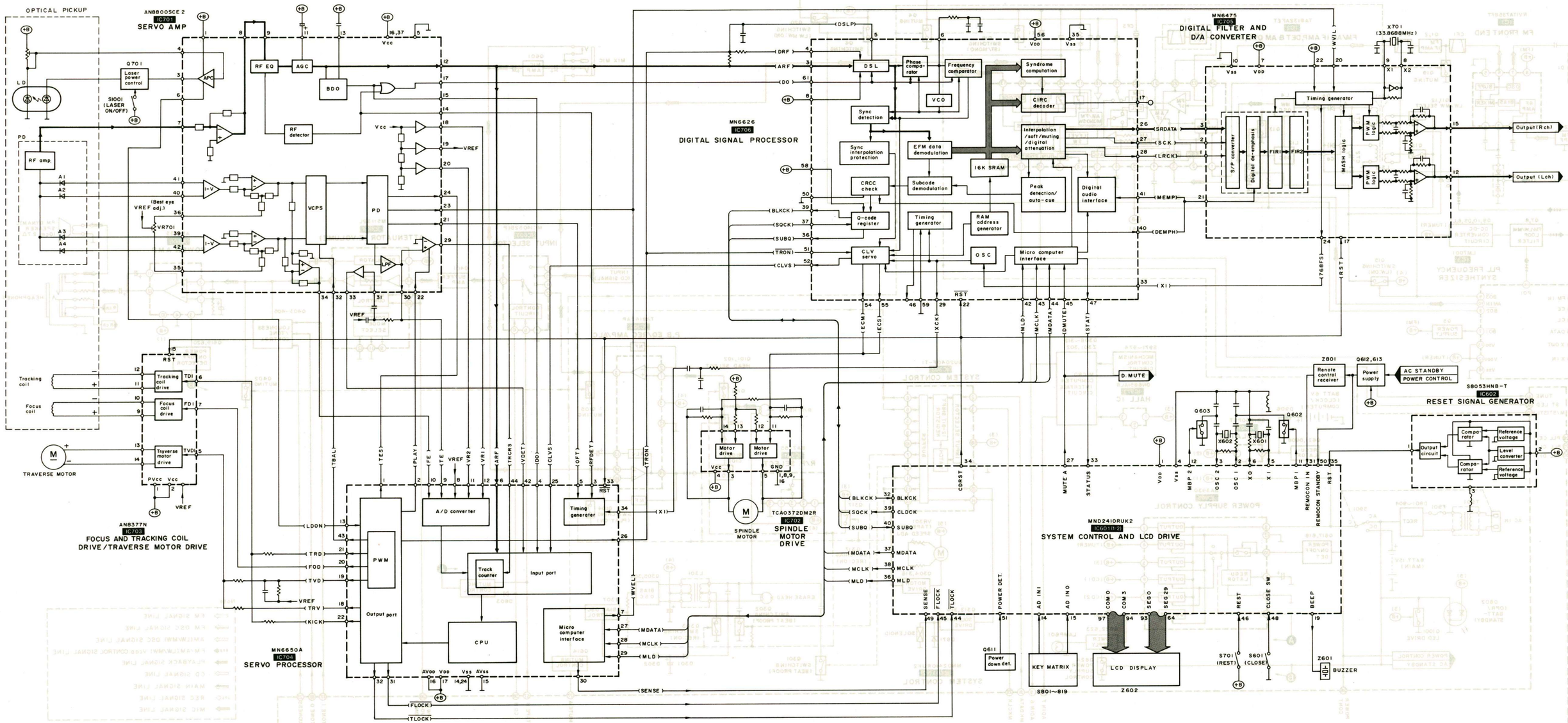

TROUBLESHOOTING GUIDE (CD SECTION)

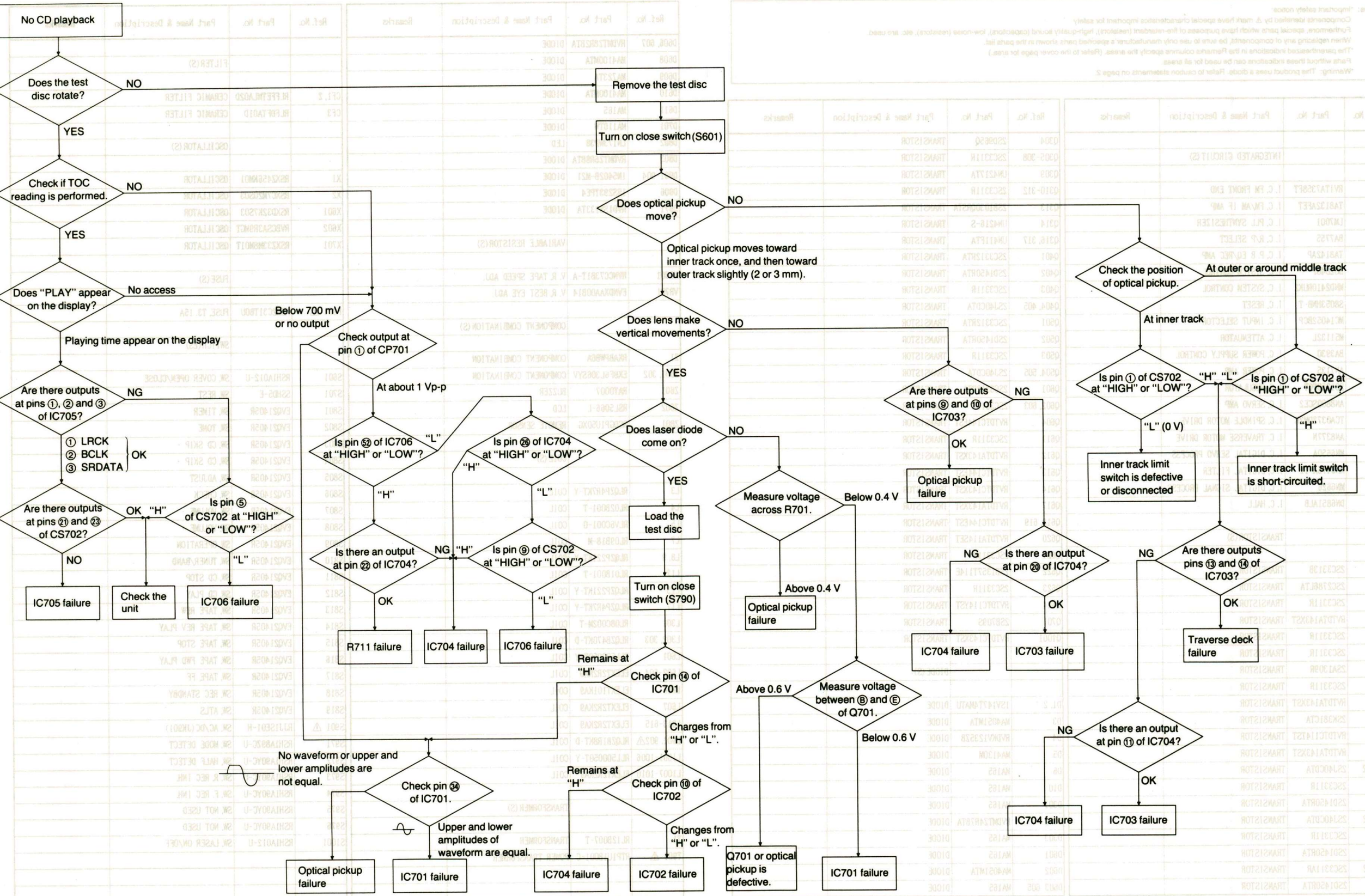

■ REPLACEMENT PARTS LIST

Notes: *Important safety notice:
Components identified by ⚠ mark have special characteristics important for safety.
Furthermore, special parts which have purposes of fire-retardant (resistors), high-quality sound (capacitors), low-noise (resistors), etc. are used.
When replacing any of components, be sure to use only manufacturer's specified parts shown in the parts list.
*The parenthesized indications in the Remarks columns specify the areas. (Refer to the cover page for area.)
Parts without these indications can be used for all areas.
*Warning: This product uses a diode. Refer to caution statements on page 2.

Ref. No.	Part No.	Part Name & Description	Remarks
		INTEGRATED CIRCUIT(S)	
IC1	RVITA7358FT	I. C, FM FRONT END	
IC2	TA8132AFET	I. C, FM/AM IF AMP	
IC3	LM7001	I. C, PLL SYNTHESIZER	
IC301	BA7755	I. C, R/P SELECT	
IC302	TA8142AP	I. C, P. B EQ/REC AMP	
IC303	BU2040F	I. C, SYSTEM CONTROL	
IC601	MND2410RUK2	I. C, SYSTEM CONTROL	
IC602	S8053HNB-T	I. C, RESET	
IC603	MC14052BCP	I. C, INPUT SELECTOR	
IC604	M51132L	I. C, ATTENUATOR	
IC605	BA3930	I. C, POWER SUPPLY CONTROL	
IC606	AN7135	I. C, POWER AMP	
IC607	S81250PGT	I. C, REGULATOR	
IC701	AN8800SCE2	I. C, SERVO AMP	
IC702	TCA0372DM2R	I. C, SPINDLE MOTOR DRIVE	
IC703	AN8377N	I. C, TRAVERSE MOTOR DRIVE	
IC704	MN6650A	I. C, DIGITAL SERVO PROCESS	
IC705	MN6475A-T1	I. C, DIGITAL FILTER	
IC706	MN6626	I. C, DIGITAL SIGNAL PROCESS	
IC971	DN6851ALB	I. C, HALL	
		TRANSISTOR(S)	
Q1, 2	2SC3313B	TRANSISTOR	
Q3	2SC2786LTA	TRANSISTOR	
Q4	2SC3311R	TRANSISTOR	
Q5, 6	RVTDTA143XST	TRANSISTOR	
Q7-9	2SC3311R	TRANSISTOR	
Q10	2SC3311R	TRANSISTOR	
Q11, 12	2SA1309R	TRANSISTOR	
Q13, 14	2SC3311R	TRANSISTOR	
Q15	RVTDTA143XST	TRANSISTOR	
Q18	2SK381CTA	TRANSISTOR	
Q19	RVTDTC114TST	TRANSISTOR	
Q20	RVTDTA143XST	TRANSISTOR	
Q101, 102	2SJ40CDTA	TRANSISTOR	
Q104	2SC3311R	TRANSISTOR	
Q105	2SD1450RTA	TRANSISTOR	
Q201, 202	2SJ40CDTA	TRANSISTOR	
Q204	2SC3311R	TRANSISTOR	
Q205	2SD1450RTA	TRANSISTOR	
Q301, 302	2SC3311AR	TRANSISTOR	
Q303	2SD1450RTA	TRANSISTOR	

Ref. No.	Part No.	Part Name & Description	Remarks
Q304	2SD965Q	TRANSISTOR	
Q305-308	2SC3311R	TRANSISTOR	
Q309	UN4217TA	TRANSISTOR	
Q310-312	2SC3311R	TRANSISTOR	
Q313	2SB1030QRSTA	TRANSISTOR	
Q314	UN4216-S	TRANSISTOR	
Q316, 317	UN411FTA	TRANSISTOR	
Q401	2SC3312RTA	TRANSISTOR	
Q402	2SD1450RTA	TRANSISTOR	
Q403	2SC3311R	TRANSISTOR	
Q404, 405	2SJ40CDTA	TRANSISTOR	
Q501	2SC3312RTA	TRANSISTOR	
Q502	2SD1450RTA	TRANSISTOR	
Q503	2SC3311R	TRANSISTOR	
Q504, 505	2SJ40CDTA	TRANSISTOR	
Q601	2SC3312RTA	TRANSISTOR	
Q602, 603	2SC3311R	TRANSISTOR	
Q604	RVTDTC144EST	TRANSISTOR	
Q611	2SC3311R	TRANSISTOR	
Q612	RVTDTA143XST	TRANSISTOR	
Q613	RVTDTC144EST	TRANSISTOR	
Q614	RVTDTC143XST	TRANSISTOR	
Q617	RVTDTA143XST	TRANSISTOR	
Q618, 619	RVTDTC144EST	TRANSISTOR	
Q620	RVTDTA114SET	TRANSISTOR	
Q621	2SC3311R	TRANSISTOR	
Q622	2SB1357T114E	TRANSISTOR	
Q623	2SC3311R	TRANSISTOR	
Q624	RVTDTC114YST	TRANSISTOR	
Q701	2SB709S	TRANSISTOR	
Q1001	RVTDTC143XST	TRANSISTOR	
		DIODE(S)	
D1, 2	1SV147T4MATU	DIODE	
D3	MA4051MTA	DIODE	
D4	RVDKV1235ZB	DIODE	
D5	MA4130M	DIODE	
D6	MA165	DIODE	
D10	MA165	DIODE	
D301	MA165	DIODE	
D302	RVDMTZ4R7BTA	DIODE	
D303	MA165	DIODE	
D601	MA165	DIODE	
D602	MA4051MTA	DIODE	
D603-605	MA165	DIODE	

Ref. No.	Part No.	Part Name & Description	Remarks
D606, 607	RVDMTZ8R2BTA	DIODE	
D608	MA4100MTA	DIODE	
D609	MA723TA	DIODE	
D610	MA4100MTA	DIODE	
D611	MA165	DIODE	
D701	MA110TW	DIODE	
D802	LN173WP38	LED	
D803	RVDMTZ6R8BTA	DIODE	
D901-904	1N5402B-M21	DIODE	
D906	1SS293TPE4	DIODE	
D971	RVD1SS133TA	DIODE	
		VARIABLE RESISTOR(S)	
VR301	RVNCC73B1T-A	V. R, TAPE SPEED ADJ.	
VR701	EVNDXAA00B14	V. R, BEST EYE ADJ.	
		COMPONENT COMBINATION(S)	
Z1	RXABPWB6A	COMPONENT COMBINATION	
Z301, 302	EXBF6L306SYV	COMPONENT COMBINATION	
Z601	RAT0007	BUZZER	
Z602	RSL5066-L	LCD	
Z801	RCDGP1U50XG	REMOTE SENSOR	
		COIL(S)	
L3	RLQZP4R7KT-Y	COIL	
L4	RL02B001-T	COIL	
L5	RLV6C001-0	COIL	
L7	RL09B18-M	COIL	
L8, 9	RLQZP221KT-Y	COIL	
L12	RL01B001-T	COIL	
L15	RLQZP221KT-Y	COIL	
L17	RLQZP4R7KT-Y	COIL	
L301	RL08C002M-T	COIL	
L302, 303	RLQZB470KT-D	COIL	
L601	RLL500050T-Y	COIL	
L602-604	ELEXT2R2KA9	COIL	
L606	ELEXT101KA9	COIL	
L607	ELEXT2R2KA9	COIL	
L613-615	ELEXT2R2KA9	COIL	
L901, 902⚠	RLQZB1R8KT-D	COIL	
L1001-1006	RLL500050T-Y	COIL	
L1007-1010	ELEXT2R2KA9	COIL	
		TRANSFORMER(S)	
T1	RL12B007-T	TRANSFORMER	
T901 ⚠	RTP1U1B001-C	POWER TRANSFORMER	

Ref. No.	Part No.	Part Name & Description	Remarks
		FILTER(S)	
CF1, 2	RLFFETMLA02D	CERAMIC FILTER	
CF3	RLFDFTA01D	CERAMIC FILTER	
		OSCILLATOR(S)	
X1	RSXZ456KM01	OSCILLATOR	
X2	RSXC7M20S03	OSCILLATOR	
X601	RSXD32K7S03	OSCILLATOR	
X602	RVBCSA3R9MGT	OSCILLATOR	
X701	RSXZ33M8M01T	OSCILLATOR	
		FUSE(S)	
F901 ⚠	XBA2C31TB0U	FUSE, T3. 15A	
		SWITCH(ES)	
S601	RSH1A012-U	SW, COVER OPEN/CLOSE	
S701	SSHD5-E	SW, REST	
S801	EVQ21405R	SW, TIMER	
S802	EVQ21405R	SW, TONE	
S803	EVQ21405R	SW, CD SKIP -	
S804	EVQ21405R	SW, CD SKIP +	
S805	EVQ21405R	SW, ADJUST	
S806	EVQ21405R	SW, CHECK	
S807	EVQ21405R	SW, VOLUME -	
S808	EVQ21405R	SW, VOLUME +	
S809	EVQ21405R	SW, OPERATION	
S810	EVQ21405R	SW, TUNER/BAND	
S811	EVQ21405R	SW, CD STOP	
S812	EVQ21405R	SW, CD PLAY	
S813	EVQ21405R	SW, TAPE REW	
S814	EVQ21405R	SW, TAPE REV PLAY	
S815	EVQ21405R	SW, TAPE STOP	
S816	EVQ21405R	SW, TAPE FWD PLAY	
S817	EVQ21405R	SW, TAPE FF	
S818	EVQ21405R	SW, REC STANDBY	
S819	EVQ21405R	SW, ATLS	
S901 ⚠	RJJ1SE01-H	SW, AC/DC(JK901)	
S971	RSH1A89ZC-U	SW, MODE DETECT	
S972	RSH1A90YC-U	SW, HALF DETECT	
S973	RSH1A90YC-U	SW, R. REC INH.	
S974	RSH1A90YC-U	SW, F. REC INH.	
S975	RSH1A90YC-U	SW, NOT USED	
S976	RSH1A90YC-U	SW, NOT USED	
S1001	RSH1A012-U	SW, LASER ON/OFF	

■ TROUBLESHOOTING GUIDE (CD SECTION)

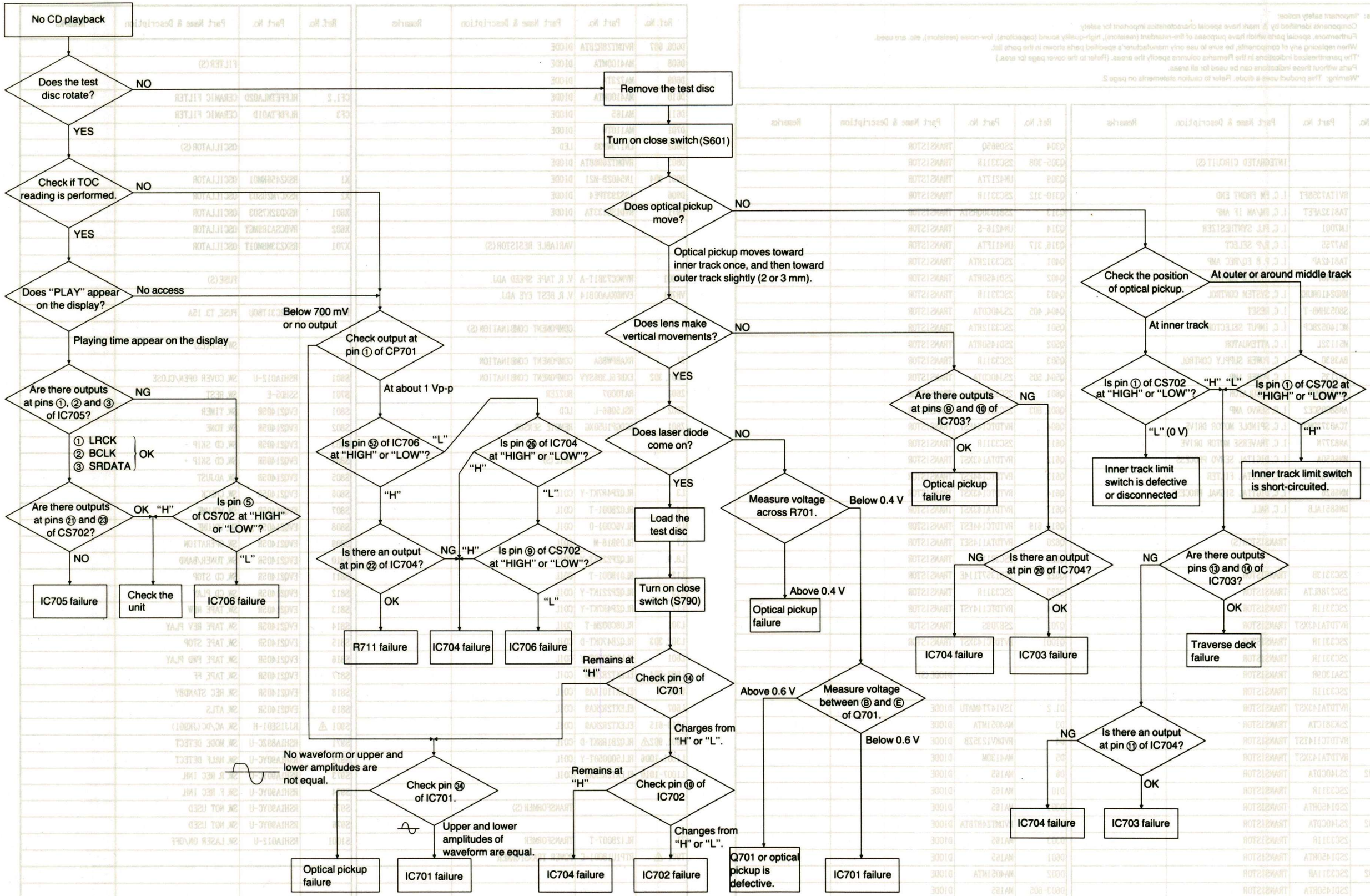

■ REPLACEMENT PARTS LIST

Notes: *Important safety notice:
Components identified by ⚠ mark have special characteristics important for safety.
Furthermore, special parts which have purposes of fire-retardant (resistors), high-quality sound (capacitors), low-noise (resistors), etc. are used.
When replacing any of components, be sure to use only manufacturer's specified parts shown in the parts list.
*The parenthesized indications in the Remarks columns specify the areas. (Refer to the cover page for area.)
Parts without these indications can be used for all areas.
*Warning: This product uses a diode. Refer to caution statements on page 2.

Ref. No.	Part No.	Part Name & Description	Remarks
		INTEGRATED CIRCUIT(S)	
IC1	RVITA7358FT	I. C, FM FRONT END	
IC2	TA8132AFET	I. C, FM/AM IF AMP	
IC3	LM7001	I. C, PLL SYNTHESIZER	
IC301	BA7755	I. C, R/P SELECT	
IC302	TA8142AP	I. C, P. B EQ/REC AMP	
IC303	BU2040F	I. C, SYSTEM CONTROL	
IC601	MND2410RUK2	I. C, SYSTEM CONTROL	
IC602	S8053HNB-T	I. C, RESET	
IC603	MC14052BCP	I. C, INPUT SELECTOR	
IC604	M51132L	I. C, ATTENUATOR	
IC605	BA3930	I. C, POWER SUPPLY CONTROL	
IC606	AN7135	I. C, POWER AMP	
IC607	S81250PGT	I. C, REGULATOR	
IC701	AN8800SCE2	I. C, SERVO AMP	
IC702	TCA0372DM2R	I. C, SPINDLE MOTOR DRIVE	
IC703	AN8377N	I. C, TRAVERSE MOTOR DRIVE	
IC704	MN6650A	I. C, DIGITAL SERVO PROCESS	
IC705	MN6475A-T1	I. C, DIGITAL FILTER	
IC706	MN6626	I. C, DIGITAL SIGNAL PROCESS	
IC971	DN6851ALB	I. C, HALL	
		TRANSISTOR(S)	
Q1, 2	2SC3313B	TRANSISTOR	
Q3	2SC2786LTA	TRANSISTOR	
Q4	2SC3311R	TRANSISTOR	
Q5, 6	RVTDTA143XST	TRANSISTOR	
Q7-9	2SC3311R	TRANSISTOR	
Q10	2SC3311R	TRANSISTOR	
Q11, 12	2SA1309R	TRANSISTOR	
Q13, 14	2SC3311R	TRANSISTOR	
Q15	RVTDTA143XST	TRANSISTOR	
Q18	2SK381CTA	TRANSISTOR	
Q19	RVTDTC114TST	TRANSISTOR	
Q20	RVTDTA143XST	TRANSISTOR	
Q101, 102	2SJ40CDTA	TRANSISTOR	
Q104	2SC3311R	TRANSISTOR	
Q105	2SD1450RTA	TRANSISTOR	
Q201, 202	2SJ40CDTA	TRANSISTOR	
Q204	2SC3311R	TRANSISTOR	
Q205	2SD1450RTA	TRANSISTOR	
Q301, 302	2SC3311AR	TRANSISTOR	
Q303	2SD1450RTA	TRANSISTOR	

Ref. No.	Part No.	Part Name & Description	Remarks
Q304	2SD965Q	TRANSISTOR	
Q305-308	2SC3311R	TRANSISTOR	
Q309	UN4217TA	TRANSISTOR	
Q310-312	2SC3311R	TRANSISTOR	
Q313	2SB1030QRSTA	TRANSISTOR	
Q314	UN4216-S	TRANSISTOR	
Q316, 317	UN411FTA	TRANSISTOR	
Q401	2SC3312RTA	TRANSISTOR	
Q402	2SD1450RTA	TRANSISTOR	
Q403	2SC3311R	TRANSISTOR	
Q404, 405	2SJ40CDTA	TRANSISTOR	
Q501	2SC3312RTA	TRANSISTOR	
Q502	2SD1450RTA	TRANSISTOR	
Q503	2SC3311R	TRANSISTOR	
Q504, 505	2SJ40CDTA	TRANSISTOR	
Q601	2SC3312RTA	TRANSISTOR	
Q602, 603	2SC3311R	TRANSISTOR	
Q604	RVTDTC144EST	TRANSISTOR	
Q611	2SC3311R	TRANSISTOR	
Q612	RVTDTA143XST	TRANSISTOR	
Q613	RVTDTC144EST	TRANSISTOR	
Q614	RVTDTC143XST	TRANSISTOR	
Q617	RVTDTA143XST	TRANSISTOR	
Q618, 619	RVTDTC144EST	TRANSISTOR	
Q620	RVTDTA114SET	TRANSISTOR	
Q621	2SC3311R	TRANSISTOR	
Q622	2SB1357T114E	TRANSISTOR	
Q623	2SC3311R	TRANSISTOR	
Q624	RVTDTC114YST	TRANSISTOR	
Q701	2SB709S	TRANSISTOR	
Q1001	RVTDTC143XST	TRANSISTOR	
		DIODE(S)	
D1, 2	1SV147T4MATU	DIODE	
D3	MA4051MTA	DIODE	
D4	RVDKV1235ZB	DIODE	
D5	MA4130M	DIODE	
D6	MA165	DIODE	
D10	MA165	DIODE	
D301	MA165	DIODE	
D302	RVDMTZ4R7BTA	DIODE	
D303	MA165	DIODE	
D601	MA165	DIODE	
D602	MA4051MTA	DIODE	
D603-605	MA165	DIODE	

Ref. No.	Part No.	Part Name & Description	Remarks
D606, 607	RVDMTZ8R2BTA	DIODE	
D608	MA4100MTA	DIODE	
D609	MA723TA	DIODE	
D610	MA4100MTA	DIODE	
D611	MA165	DIODE	
D701	MA110TW	DIODE	
D802	LN173WP38	LED	
D803	RVDMTZ6R8BTA	DIODE	
D901-904	1N5402B-M21	DIODE	
D906	1SS293TPE4	DIODE	
D971	RVD1SS133TA	DIODE	
		VARIABLE RESISTOR(S)	
VR301	RVNCC73B1T-A	V. R, TAPE SPEED ADJ.	
VR701	EVNDXAA00B14	V. R, BEST EYE ADJ.	
		COMPONENT COMBINATION(S)	
Z1	RXABPWB6A	COMPONENT COMBINATION	
Z301, 302	EXBF6L306SYV	COMPONENT COMBINATION	
Z601	RAT0007	BUZZER	
Z602	RSL5066-L	LCD	
Z801	RCDGP1U50XG	REMOTE SENSOR	
		COIL(S)	
L3	RLQZP4R7KT-Y	COIL	
L4	RL02B001-T	COIL	
L5	RLV6C001-0	COIL	
L7	RL09B18-M	COIL	
L8, 9	RLQZP221KT-Y	COIL	
L12	RL01B001-T	COIL	
L15	RLQZP221KT-Y	COIL	
L17	RLQZP4R7KT-Y	COIL	
L301	RL08C002M-T	COIL	
L302, 303	RLQZB470KT-D	COIL	
L601	RLL500050T-Y	COIL	
L602-604	ELEXT2R2KA9	COIL	
L606	ELEXT101KA9	COIL	
L607	ELEXT2R2KA9	COIL	
L613-615	ELEXT2R2KA9	COIL	
L901, 902⚠	RLQZB1R8KT-D	COIL	
L1001-1006	RLL500050T-Y	COIL	
L1007-1010	ELEXT2R2KA9	COIL	
		TRANSFORMER(S)	
T1	RLI2B007-T	TRANSFORMER	
T901 ⚠	RTP1U1B001-C	POWER TRANSFORMER	

Ref. No.	Part No.	Part Name & Description	Remarks
		FILTER(S)	
CF1, 2	RLFFETMLA02D	CERAMIC FILTER	
CF3	RLFDFTA01D	CERAMIC FILTER	
		OSCILLATOR(S)	
X1	RSXZ456KM01	OSCILLATOR	
X2	RSXC7M20S03	OSCILLATOR	
X601	RSXD32K7S03	OSCILLATOR	
X602	RVBCSA3R9MGT	OSCILLATOR	
X701	RSXZ33M8M01T	OSCILLATOR	
		FUSE(S)	
F901 ⚠	XBA2C31TB0U	FUSE, T3. 15A	
		SWITCH(ES)	
S601	RSH1A012-U	SW, COVER OPEN/CLOSE	
S701	SSHD5-E	SW, REST	
S801	EVQ21405R	SW, TIMER	
S802	EVQ21405R	SW, TONE	
S803	EVQ21405R	SW, CD SKIP -	
S804	EVQ21405R	SW, CD SKIP +	
S805	EVQ21405R	SW, ADJUST	
S806	EVQ21405R	SW, CHECK	
S807	EVQ21405R	SW, VOLUME -	
S808	EVQ21405R	SW, VOLUME +	
S809	EVQ21405R	SW, OPERATION	
S810	EVQ21405R	SW, TUNER/BAND	
S811	EVQ21405R	SW, CD STOP	
S812	EVQ21405R	SW, CD PLAY	
S813	EVQ21405R	SW, TAPE REW	
S814	EVQ21405R	SW, TAPE REV PLAY	
S815	EVQ21405R	SW, TAPE STOP	
S816	EVQ21405R	SW, TAPE FWD PLAY	
S817	EVQ21405R	SW, TAPE FF	
S818	EVQ21405R	SW, REC STANDBY	
S819	EVQ21405R	SW, ATLS	
S901 ⚠	RJJ1SE01-H	SW, AC/DC(JK901)	
S971	RSH1A89ZC-U	SW, MODE DETECT	
S972	RSH1A90YC-U	SW, HALF DETECT	
S973	RSH1A90YC-U	SW, R. REC INH.	
S974	RSH1A90YC-U	SW, F. REC INH.	
S975	RSH1A90YC-U	SW, NOT USED	
S976	RSH1A90YC-U	SW, NOT USED	
S1001	RSH1A012-U	SW, LASER ON/OFF	

Ref. No.	Part No.	Part Name & Description	Remarks
		CONNECTOR	
CM801	RJS8T77ZA	CONNECTOR(8P)	
CP1	RJP12G18ZA	CONNECTOR(12P)	
CP3	RJP2G17ZA	CONNECTOR(2P)	
CP301	RJP5G18ZA	CONNECTOR(5P)	
CP302	SJTD1013	CONNECTOR(10P)	
CP303	RJP9G18ZA	CONNECTOR(9P)	
CP604	RJP4G4YA	CONNECTOR(4P)	
CP701, 702	RJP2G17ZA	CONNECTOR(2P)	
CP703	RJP4G17ZA	CONNECTOR(4P)	
CP901	RJP4G9YA	CONNECTOR(4P)	
CP902	RJP3G9YA	CONNECTOR(3P)	
CS605	RJS1A6823	CONNECTOR(23P)	
CS701	RJU035T016-1	CONNECTOR(16P)	
CS702	RJS1A6723-1Q	CONNECTOR(23P)	
J971	RJS10T77A	CONNECTOR(10P)	
		TRIMMER	
CT1	RCV10AF1T-S	TRIMMER CAPACITOR	
CT2	ECRLA020E53R	TRIMMER CAPACITOR	
		FUSE HOLDER	
FH901 ⚠	EYF52BC	FUSE HOLDER	
FH902 ⚠	EYF52BC	FUSE HOLDER	
		IC PROTECTOR	
IP601	SRUN5T	IC PROTECTOR	
IP602	SRUN15T	IC PROTECTOR	
		JACK	
JK601	RJJ1D25ZA-C	JACK, MIX MIC	
JK602	RJJD7S2YA-C	JACK, HEADPHONES	
JK901 ⚠	RJJ1SE01-H	JACK, AC IN(S901)	

Notes : • Capacity valuse are in microfarads (uF) unless specified otherwise, P=Pico-farads(pF) F=Farads(F)
• Resistance values are in ohms, unless specified otherwise, 1K=1,000(OHM) , 1M=1,000k(OHM)

Ref. No.	Part No.	Values & Remarks
		RESISTORS
R1-3	ERDS2TJ104	1/4W 100K
R4	ERDS2TJ470	1/4W 47
R5	ERDS2TJ151	1/4W 150
R6	ERDS2TJ331	1/4W 330
R7	ERDS2TJ391	1/4W 390
R8	ERDS2TJ274	1/4W 270K
R9	ERDS2TJ105T	1/4W 1M
R10	ERDS2TJ561	1/4W 560
R11	ERDS2TJ330	1/4W 33
R12	ERDS2TJ104	1/4W 100K
R13	ERDS2TJ470	1/4W 47
R15	ERDS2TJ391	1/4W 390
R16	ERDS2TJ683	1/4W 68K
R17	ERDS2TJ104	1/4W 100K
R18	ERDS2TJ103	1/4W 10K
R20	ERDS2TJ222	1/4W 2.2K
R21	ERDS2TJ562	1/4W 5.6K
R22	ERDS2TJ473	1/4W 47K
R23	ERDS2TJ102	1/4W 1K
R24	ERDS2TJ223	1/4W 22K
R25	ERDS2TJ103	1/4W 10K
R27	ERDS2TJ151	1/4W 150
R28, 29	ERDS2TJ471	1/4W 470
R30	ERDS2TJ104	1/4W 100K
R31	ERDS2TJ222	1/4W 2.2K
R32	ERDS2TJ473	1/4W 47K
R33-38	ERDS2TJ103	1/4W 10K
R39	ERDS2TJ102	1/4W 1K
R40	ERDS2TJ223	1/4W 22K
R50, 51	ERDS2TJ103	1/4W 10K
R52	ERDS2TJ102	1/4W 1K
R55	ERDS2TJ103	1/4W 10K
R56	ERDS2TJ222	1/4W 2.2K
R60	ERDS2TJ104	1/4W 100K
R61	ERDS2TJ103	1/4W 10K
R62, 63	ERDS2TJ681	1/4W 680
R71	ERDS2TJ274	1/4W 270K
R101	ERDS2TJ474	1/4W 470K
R102	ERDS2TJ123	1/4W 12K
R103	ERDS2TJ820	1/4W 82
R104	ERDS2TJ681	1/4W 680
R105	ERDS2TJ822	1/4W 8.2K
R107	ERDS2TJ334	1/4W 330K
R108	ERDS2TJ822	1/4W 8.2K
R109	ERDS2TJ123	1/4W 12K
R110	ERDS2TJ272T	1/4W 2.7K

Ref. No.	Part No.	Values & Remarks
R111	ERDS2TJ822	1/4W 8.2K
R112	ERDS2TJ470	1/4W 47
R113	ERDS2TJ472	1/4W 4.7K
R201	ERDS2TJ474	1/4W 470K
R202	ERDS2TJ123	1/4W 12K
R203	ERDS2TJ820	1/4W 82
R204	ERDS2TJ681	1/4W 680
R205	ERDS2TJ822	1/4W 8.2K
R207	ERDS2TJ334	1/4W 330K
R208	ERDS2TJ822	1/4W 8.2K
R209	ERDS2TJ123	1/4W 12K
R210	ERDS2TJ272T	1/4W 2.7K
R211	ERDS2TJ822	1/4W 8.2K
R212	ERDS2TJ470	1/4W 47
R213	ERDS2TJ472	1/4W 4.7K
R301	ERDS2TJ474	1/4W 470K
R302	ERDS2TJ104	1/4W 100K
R303	ERDS2TJ103	1/4W 10K
R304-306	ERDS2TJ102	1/4W 1K
R307	ERDS2TJ221	1/4W 220
R308	ERDS2TJ2R7T	1/4W 2.7
R309	ERDS2TJ123	1/4W 12K
R310	ERDS2TJ472	1/4W 4.7K
R311	ERDS2TJ4R7T	1/4W 4.7
R312	ERDS2TJ103	1/4W 10K
R313	ERDS2TJ472	1/4W 4.7K
R314	ERDS2TJ392T	1/4W 3.9K
R315	ERDS2TJ472	1/4W 4.7K
R318-322	ERDS2TJ473	1/4W 47K
R323	ERDS2TJ102	1/4W 1K
R324, 325	ERDS2TJ104	1/4W 100K
R326, 327	ERDS2TJ102	1/4W 1K
R328	ERDS2TJ101	1/4W 100
R329	ERDS2TJ335T	1/4W 3.3M
R332	ERDS2TJ223	1/4W 22K
R333	ERDS2TJ102	1/4W 1K
R401	ERDS2TJ683	1/4W 68K
R402	ERDS2TJ123	1/4W 12K
R403	ERDS2TJ393	1/4W 39K
R404	ERDS2TJ563	1/4W 56K
R406	ERDS2TJ682T	1/4W 6.8K
R407	ERDS2TJ684	1/4W 680K
R408	ERDS2TJ122	1/4W 1.2K
R409, 410	ERDS2TJ153	1/4W 15K
R411	ERDS2TJ272T	1/4W 2.7K
R412	ERDS2TJ181T	1/4W 180
R413, 414	ERDS2TJ183T	1/4W 18K
R415	ERDS2TJ683	1/4W 68K
R416	ERDS2TJ1R2	1/4W 1.2

Ref. No.	Part No.	Values & Remarks
R417	ERDS2TJ222	1/4W 2.2K
R418	ERDS2TJ221	1/4W 220
R419	ERDS2TJ222	1/4W 2.2K
R420	ERDS2TJ1R0	1/4W 1.0
R421	ERDS2TJ333	1/4W 33K
R501	ERDS2TJ683	1/4W 68K
R502	ERDS2TJ123	1/4W 12K
R503	ERDS2TJ393	1/4W 39K
R504	ERDS2TJ563	1/4W 56K
R506	ERDS2TJ682T	1/4W 6.8K
R507	ERDS2TJ684	1/4W 680K
R508	ERDS2TJ122	1/4W 1.2K
R509, 510	ERDS2TJ153	1/4W 15K
R511	ERDS2TJ272T	1/4W 2.7K
R512	ERDS2TJ181T	1/4W 180
R513, 514	ERDS2TJ183T	1/4W 18K
R515	ERDS2TJ683	1/4W 68K
R516	ERDS2TJ1R2	1/4W 1.2
R517	ERDS2TJ222	1/4W 2.2K
R518	ERDS2TJ221	1/4W 220
R519	ERDS2TJ222	1/4W 2.2K
R520	ERDS2TJ1R0	1/4W 1.0
R521	ERDS2TJ333	1/4W 33K
R601	ERDS2TJ102	1/4W 1K
R602	ERDS2TJ101	1/4W 100
R603	ERDS2TJ180T	1/4W 18
R604, 605	ERDS2TJ221	1/4W 220
R606, 607	ERDS2TJ682T	1/4W 6.8K
R608	ERDS2TJ124T	1/4W 120K
R609	ERDS2TJ222	1/4W 2.2K
R610	ERDS2TJ104	1/4W 100K
R611	ERDS2TJ333	1/4W 33K
R612, 613	ERDS2TJ823T	1/4W 82K
R614	ERDS2TJ104	1/4W 100K
R615	ERDS2TJ102	1/4W 1K
R616	ERDS2TJ105T	1/4W 1M
R617	ERDS2TJ106T	1/4W 10M
R618	ERDS2TJ224T	1/4W 220K
R619	ERDS2TJ103	1/4W 10K
R620-622	ERDS2TJ153	1/4W 15K
R623	ERDS2TJ333	1/4W 33K
R624, 625	ERDS2TJ472	1/4W 4.7K
R626	ERDS2TJ104	1/4W 100K
R631	ERDS2TJ104	1/4W 100K
R632	ERDS2TJ221	1/4W 220
R637	ERDS2TJ104	1/4W 100K
R639	ERDS2TJ104	1/4W 100K
R640	ERDS2TJ103	1/4W 10K
R641	ERDS2TJ821	1/4W 820

Ref. No.	Part No.	Values & Remarks
R642	ERDS2TJ103	1/4W 10K
R643	ERDS2TJ822	1/4W 8.2K
R644	ERDS2TJ474	1/4W 470K
R645	ERDS2TJ222	1/4W 2.2K
R648, 649	ERDS2TJ473	1/4W 47K
R650	ERDS2TJ103	1/4W 10K
R651	ERDS2TJ473	1/4W 47K
R652	ERDS2TJ333	1/4W 33K
R653	ERDS2TJ472	1/4W 4.7K
R654-657	ERDS2TJ103	1/4W 10K
R659	ERDS2TJ472	1/4W 4.7K
R660	ERDS2TJ103	1/4W 10K
R661	ERDS2TJ473	1/4W 47K
R662	ERDS2TJ433	1/4W 43K
R663	ERDS2TJ1R5T	1/4W 1.5
R664	ERDS2TJ221	1/4W 220
R665	ERDS2TJ152	1/4W 1.5K
R666	ERDS2TJ223	1/4W 22K
R667	ERDS2TJ103	1/4W 10K
R669	ERDS2TJ102	1/4W 1K
R670	ERDS2TJ221	1/4W 220
R675	ERDS2TJ334	1/4W 330K
R676, 677	ERDS2TJ472	1/4W 4.7K
R678	ERDS2TJ102	1/4W 1K
R679-687	ERDS2TJ472	1/4W 4.7K
R688	ERDS2TJ470	1/4W 47
R689	ERDS2TJ182	1/4W 1.8K
R690	ERDS2TJ221	1/4W 220
R691	ERDS2TJ472	1/4W 4.7K
R699	ERDS1FVJ680T	1/2W 68
R701	ERJ6GEYJ100	1/10W 10
R702	ERJ6GEYJ471V	1/10W 470
R703	ERJ6GEYJ102A	1/10W 1K
R704	ERJ6GEYJ103V	1/10W 10K
R706	ERJ6GEYJ473V	1/10W 47K
R707	ERJ6GEYJ222V	1/10W 2.2K
R708	ERJ6GEYJ683V	1/10W 68K
R709	ERJ6GEYJ122V	1/10W 1.2K
R710	ERJ6GEYJ182V	1/10W 1.8K
R711	ERJ6GEYJ473V	1/10W 47K
R712	ERJ6GEYJ471V	1/10W 470
R714	ERJ6GEYJ473V	1/10W 47K
R715	ERJ6GEYJ223V	1/10W 22K
R716	ERJ6GEYJ104V	1/10W 100K
R717	ERJ6GEYJ682V	1/10W 6.8K
R718	ERJ6GEYJ223V	1/10W 22K
R719	ERJ6GEYJ123V	1/10W 12K
R720	ERJ6GEYJ273V	1/10W 27K
R721	ERJ6GEYJ823	1/10W 82K
R722	ERJ6GEYJ102A	1/10W 1K
R723, 724	ERJ6GEYJ104V	1/10W 100K
R725	ERJ6GEYJ471V	1/10W 470

Ref. No.	Part No.	Values & Remarks
R726	ERJ6GEYJ102A	1/10W 1K
R729, 730	ERJ6GEYJ102A	1/10W 1K
R731	ERJ8GEYJ470V	1/8W 47
R732	ERJ6GEYJ562V	1/10W 5.6K
R733	ERJ6GEYJ332V	1/10W 3.3K
R734	ERJ6GEYJ562V	1/10W 5.6K
R735	ERJ6GEYJ222V	1/10W 2.2K
R736	ERJ6GEYJ682V	1/10W 6.8K
R737-739	ERJ6GEYJ562V	1/10W 5.6K
R741-743	ERJ6GEYJ102A	1/10W 1K
R744	ERJ6GEYJ393V	1/10W 39K
R745, 746	ERJ6GEYJ102A	1/10W 1K
R747	ERJ6GEYJ473V	1/10W 47K
R748	ERJ8GEYJ180V	1/8W 18
R749	ERJ6GEYJ101V	1/10W 100
R801	ERDS2TJ101	1/4W 100
R802	ERDS2TJ152	1/4W 1.5K
R803	ERDS2TJ222	1/4W 2.2K
R804	ERDS2TJ272T	1/4W 2.7K
R805	ERDS2TJ392T	1/4W 3.9K
R806	ERDS2TJ562	1/4W 5.6K
R807	ERDS2TJ822	1/4W 8.2K
R808	ERDS2TJ153	1/4W 15K
R809	ERDS2TJ333	1/4W 33K
R810	ERDS2TJ152	1/4W 1.5K
R811	ERDS2TJ222	1/4W 2.2K
R812	ERDS2TJ272T	1/4W 2.7K
R813	ERDS2TJ392T	1/4W 3.9K
R814	ERDS2TJ562	1/4W 5.6K
R815	ERDS2TJ822	1/4W 8.2K
R816	ERDS2TJ153	1/4W 15K
R817	ERDS2TJ333	1/4W 33K
R818	ERDS2TJ823T	1/4W 82K
R901	ERDS2TJ681	1/4W 680
R1001	ERDS2TJ681	1/4W 680
R1003-1005	ERDS2TJ104	1/4W 100K
		CHIP JUMPER
RJ701	ERJ6GEY0R00A	1/10W 0
RJ703-710	ERJ6GEY0R00A	1/10W 0
		CAPACITORS
C1	ECBT1H180JC5	50V 18P
C2	ECBT1H102KB5	50V 1000P
C3	ECBT1H330J5	50V 33P
C4	ECBT1H102KB5	50V 1000P
C5	ECBT1C103MS5	16V 0.01U
C6, 7	ECBT1H181KB5	50V 180P
C8	ECBT1H102KB5	50V 1000P
C9	ECBT1H4R7KC5	50V 4.7P

Ref. No.	Part No.	Values & Remarks
C10	ECBT1H2R2KC5	50V 2.2P
C11, 12	ECBT1H102KB5	50V 1000P
C14, 15	ECBT1H102KB5	50V 1000P
C18	ECBT1H150JC5	50V 15P
C19	ECBT1H100JC5	50V 10P
C20	ECFR1C473MR	16V 0.047U
C23	ECEA1HN010	50V 1U
C24	ECBT1C103MS5	16V 0.01U
C25	ECFR1C223MR	16V 0.022U
C26	ECEA1CU101	16V 100U
C27	ECBT1C103MS5	16V 0.01U
C29	ECEA1HU010	50V 1U
C30	ECBT1H270J5	50V 27P
C31	ECEA1AU470	10V 47U
C32	ECFR1C223MR	16V 0.022U
C33, 34	ECEA1CU100	16V 10U
C35	ECFR1C223MR	16V 0.022U
C36	ECBT1H331KB5	50V 330P
C37	ECFR1C683MR	16V 0.068U
C38, 39	ECFR1C823MR	16V 0.082U
C40, 41	ECFR1C123MR	16V 0.012U
C44	ECBT1H330J5	50V 33P
C45	ECFR1C223MR	16V 0.022U
C46	ECEA0JU101B	6.3V 100U
C47	ECFR1C223MR	16V 0.022U
C48	ECEA1CU100	16V 10U
C49	ECBT1H270J5	50V 27P
C50	ECBT1H300J5	50V 30P
C51	ECBT1H102KB5	50V 1000P
C52	ECEA1EU3R3	25V 3.3U
C53	ECEA1HU010	50V 1U
C62	ECFR1C103MR	16V 0.01U
C63	ECBT1H150JC5	50V 15P
C64, 65	ECFR1C223MR	16V 0.022U
C66	ECBT1H102KB5	50V 1000P
C67	ECBT1H471KB5	50V 470P
C69	ECBT1C332MR5	16V 3300P
C71	ECBT1H102KB5	50V 1000P
C72	ECBT1H331KB5	50V 330P
C73	ECFR1C223MR	16V 0.022U
C74	ECBT1H470J5	50V 47P
C77	ECBT1H181KB5	50V 180P
C78	ECBT1H331KB5	50V 330P
C82	ECBT1C103MS5	16V 0.01U
C83	ECFR1C104MR	16V 0.1U
C101	ECBT1H101KB5	50V 100P
C102	ECBT1C122KR5	16V 1200P
C103	ECEA0JU330	6.3V 33U
C104	ECBT1H331KB5	50V 330P
C105	ECFR1C153KR	16V 0.015U
C106	ECEA1EK4R7	25V 4.7U
C107	ECEA1HK010B	50V 1U

Ref. No.	Part No.	Values & Remarks
C108	ECEA0JU470B	6.3V 47U
C109, 110	ECBT1H221KB5	50V 220P
C111	ECEA1EK4R7	25V 4.7U
C112	ECBT1C152MR5	16V 1500P
C113, 114	ECBT1H102KB5	50V 1000P
C115	ECBT1H101KB5	50V 100P
C201	ECBT1H101KB5	50V 100P
C202	ECBT1C122KR5	16V 1200P
C203	ECEA0JU330	6.3V 33U
C204	ECBT1H331KB5	50V 330P
C205	ECFR1C153KR	16V 0.015U
C206	ECEA1EK4R7	25V 4.7U
C207	ECEA1HK010B	50V 1U
C208	ECEA0JU470B	6.3V 47U
C209, 210	ECBT1H221KB5	50V 220P
C211	ECEA1EK4R7	25V 4.7U
C212	ECBT1C152MR5	16V 1500P
C213, 214	ECBT1H102KB5	50V 1000P
C215	ECBT1H101KB5	50V 100P
C301	ECEA1HKNR47B	50V 0.47U
C302, 303	ECBT1C103MS5	16V 0.01U
C304	ECQS2B272KZW	100V 2700P
C305	ECQP2A152JZT	100V 1500P
C306	ECQP2A392JZT	100V 3900P
C307	ECEA1HK010B	50V 1U
C308	ECEA1AU101	10V 100U
C309	ECQV1H473JZ3	50V 0.047U
C310, 311	ECBT1H102KB5	50V 1000P
C312, 313	ECKR1H102KBD	50V 1000P
C314	ECBT1C103MS5	16V 0.01U
C315	ECEA1CU101	16V 100U
C316	ECEA0JU101B	6.3V 100U
C317, 318	ECBT1H471KB5	50V 470P
C319	ECEA1AU221	10V 220U
C320	ECEA1EK3R3B	25V 3.3U
C321	ECEA0JK220B	6.3V 22U
C322	ECEA0JU101B	6.3V 100U
C401	ECFR1C473MR	16V 0.047U
C402	ECBT1H101KB5	50V 100P
C403	ECEA1HK010B	50V 1U
C404	ECEA1HKR47	50V 0.47U
C406	ECEA1HKAR15B	50V 0.15U
C408	ECKR1H222MD5	50V 2200P
C409	ECBT1C122MR5	16V 1200P
C410	ECBT1H102KB5	50V 1000P
C411, 412	ECEA1HK010B	50V 1U
C413	ECBT1H471KB5	50V 470P
C414	ECEA0JK101	6.3V 100U
C415	ECEA1AK101	10V 100U
C416	ECA1AM222E	10V 2200U
C417	ECQM1H224JZ	50V 0.22U
C418	ECBT1H101KB5	50V 100P

Ref. No.	Part No.	Values & Remarks
C419	ECBT1H102KB5	50V 1000P
C501	ECFR1C473MR	16V 0.047U
C502	ECBT1H101KB5	50V 100P
C503	ECEA1HK010B	50V 1U
C504	ECEA1HKR47	50V 0.47U
C506	ECEA1HKAR15B	50V 0.15U
C508	ECKR1H222MD5	50V 2200P
C509	ECBT1C122MR5	16V 1200P
C510	ECBT1H102KB5	50V 1000P
C511, 512	ECEA1HK010B	50V 1U
C513	ECBT1H471KB5	50V 470P
C514	ECEA0JU101B	6.3V 100U
C515	ECEA1AU101	10V 100U
C516	ECA1AM222E	10V 2200U
C517	ECQM1H224JZ	50V 0.22U
C518	ECBT1H101KB5	50V 100P
C519	ECBT1H102KB5	50V 1000P
C601	ECEA1HK010B	50V 1U
C602	ECBT1H101KB5	50V 100P
C603	ECEA1AU101	10V 100U
C604	ECEA1HK010B	50V 1U
C605-607	ECBT1H102KB5	50V 1000P
C608	ECEA0JK101	6.3V 100U
C609	ECBT1H102KB5	50V 1000P
C610	ECEA1HU2R2	50V 2.2U
C611	ECBT1H820KB5	50V 82P
C612	ECBT1H101KB5	50V 100P
C613	ECBT1H470J5	50V 47P
C614	ECBT1H101KB5	50V 100P
C616	ECBT1C103MS5	16V 0.01U
C618	ECBT1C103MS5	16V 0.01U
C619	ECBT1H180JC5	50V 18P
C620	ECBT1H220JC5	50V 22P
C621	ECEA0JK470	6.3V 47U
C622	ECBT1C103MS5	16V 0.01U
C623	ECEA1AU101	10V 100U
C624	ECEA1HK010B	50V 1U
C625	ECEA1AU220B	10V 22U
C627	ECEA0JK220B	6.3V 22U
C628	ECEA1CK100B	16V 10U
C629, 630	ECEA1EK4R7	25V 4.7U
C635, 636	ECBT1H561KB5	50V 560P
C637	ECEA1HK010B	50V 1U
C638	ECEA1EK4R7	25V 4.7U
C639	ECEA1AU101	10V 100U
C640	ECEA1AU221	10V 220U
C641	ECEA0JU221	6.3V 220U
C642-645	ECEA1CK100B	16V 10U
C646	ECBT1H471KB5	50V 470P
C647	ECEA1CU470	16V 47U
C648	ECBT1C103MS5	16V 0.01U
C650	ECEA1CU331	16V 330U

Ref. No.	Part No.	Values & Remarks
C651	ECEA1EU332	25V 3300U
C652	ECEA1CU101	16V 100U
C653, 654	ECBT1H561KB5	50V 560P
C655	ECBT1C103MS5	16V 0.01U
C656	ECEA0JU221	6.3V 220U
C657	ECBT1H331KB5	50V 330P
C701	ECEA0JKA220	6.3V 22U
C702	ECEA0JKS470	6.3V 47U
C703	ECEA0JKS101I	6.3V 100U
C709	ECUZ1C224KBM	16V 0.22U
C710	ECUZ1C104MBM	16V 0.1U
C711	ECUW1E103MBN	25V 0.01U
C713	ECEA1CSN4R7I	16V 4.7U
C714	ECEA1HKS010	50V 1U
C715	ECUE1H472KBN	50V 4700P
C716	ECUE1C473KBN	16V 0.047U
C717	ECUE1H681KBN	50V 680P
C718	ECEA1AKS101I	10V 100U
C719	ECUW1E103MBN	25V 0.01U
C720	ECUE1E153MBN	25V 0.015U
C721	ECUW1E103MBN	25V 0.01U
C722	ECEA0JKS470	6.3V 47U
C723	ECUZ1C104MBM	16V 0.1U
C724	ECUV1E333MBN	25V 0.033U
C725	ECUW1E103MBN	25V 0.01U
C726	ECUE1H471KBN	50V 470P
C727	ECEA0JKS470	6.3V 47U
C728, 729	ECUZ1C104MBM	16V 0.1U
C730	ECUZ1C224KBM	16V 0.22U
C731	ECEA0JKS331I	6.3V 330U
C732	ECUE1H102MBN	50V 1000P
C733	ECEA0JKS101I	6.3V 100U
C734	ECUE1E223MBN	25V 0.022U
C735	ECUZ1C224KBM	16V 0.22U
C737	ECUZ1C224KBM	16V 0.22U
C738	ECEA0JKS101I	6.3V 100U
C739	ECUW1E103MBN	25V 0.01U
C740	ECUE1H472MBN	50V 4700P
C741	ECUZ1C224KBM	16V 0.22U
C742	ECUZ1C104MBM	16V 0.1U
C743	ECEA0JKS331I	6.3V 330U
C744, 745	ECUE1H102KBN	50V 1000P
C746	ECEA0JKS101I	6.3V 100U
C747	ECUZ1C104MBM	16V 0.1U
C748	ECEA1HKS010	50V 1U
C749	ECUW1E103MBN	25V 0.01U
C750	ECUE1H050DCN	50V 5P
C751	ECUZ1C224KBM	16V 0.22U
C752	ECUZ1C104MBM	16V 0.1U
C753, 754	ECEA1HKS010	50V 1U
C755	ECUZ1C104MBM	16V 0.1U
C756, 757	ECUE1H050DCN	50V 5P

Ref. No.	Part No.	Values & Remarks
C758	ECUZ1C224KBM	16V 0.22U
C763	ECUW1E103MBN	25V 0.01U
C764	ECUE1H331KBN	50V 330P
C801, 802	ECBT1H561KB5	50V 560P
C901-904	ECQV1H104JZ3	50V 0.1U
C971	ECBT1H101KB5	50V 100P
C1001	ECEA1HK2R2B	50V 2.2U
C1002, 1003	ECBT1H102KB5	50V 1000P

Ref. No.	Part No.	Part Name & Description	Remarks
		CASSETTE DECK	
201	RXQ0007-2	HEAD ASS'Y	
202	RUA793ZF	CHASSIS	
203	RZLAR300A	LEVER ASS'Y	
203A	RUW143ZA	SPRING	
204	1UB0089ZA	ARM	
204A	RUW148ZA	SPRING	
205	1DM0018ZB	REEL TABLE ASS'Y	
206	1DM0017ZB	REEL TABLE ASS'Y	
207	RML0069-1	LEVER	
208	RDG5772ZC	GEAR	
209	RUB508ZB	LEVER	
210	RUB506ZB	LEVER	
211	1UB0088ZB	PINCH ROLLER	
211A	RUW141ZA	SPRING	
212	1UB0087ZB	PINCH ROLLER	
212A	RUW140ZC	SPRING	
214	RNL1ZC	ARM	
215	RUB503ZD	LEVER	
216	RFKRAA0320	CHASSIS ASS'Y	
217	RUW142ZA	SPRING	
218	RUD105ZA	SPRING	
220	RUW139ZA	SPRING	
221	RFKPAA0309	MOTOR ASS'Y	
222	1UE0015ZB	PLUNGER	
223	RUB428ZE	SHAFT	
224	RUL1030YB	PLATE	
225	RMD5014ZB	SPACER	
226	RDG5927ZG	GEAR	
227	1DW0037ZB	FLYWHEEL ASS'Y	
227A	RNW139ZA	WASHER	
228	1DW0038ZB	FLYWHEEL ASS'Y	
228A	RUW141ZA	WASHER	
229	1DG0006ZB	GEAR	
230	RUB513ZD	LEVER	
231	1UB0091Z	LEVER	
231A	RUW146ZA	SPRING	
232	1DR0011ZB	PULLEY ASS'Y	
233	RDV90ZB	BELT	
234	RDG5769ZA	GEAR	
235	RUQ111ZB	SPRING	
236	RUW145ZA	SPRING	
237	1UB0090ZA	ROD	
237A	RUB512ZB	ROD	
238	RDG5773ZA	GEAR	
239	RUQ112ZA	SPRING	
240	RUS609ZC	SPRING	
241	RUB514Z	LEVER	
242	RUW147ZA	SPRING	
243	RUB515ZA	LEVER	
244	RUB509ZA	LEVER	

Ref. No.	Part No.	Part Name & Description	Remarks
245	RDV108ZA	BELT	
249	RMG0102-1	RUBBER	
250	RNL180ZB	LEVER	
251	REX0294-1	CABLE ASS'Y	
261	XTW2+6L	SCREW	
262	XTW2+8L	SCREW	
263	XTN26+7J	SCREW	
264	RHE5203ZA	SCREW	
265	XTW2+8S	SCREW	
266	XYC2+JF16	SCREW	
267	RHD26002	SCREW	
268	RJS10T7ZA	CONNECTOR(J971)	

■ MECHANISM PARTS LOCATION

Note:
When changing mechanism parts, apply the specified grease to areas marked "XX" as shown in the drawing.

Mark	Part No.
Ⓐ	SZZOL18
Ⓑ	SZZOL05
Ⓒ	RZZOL02

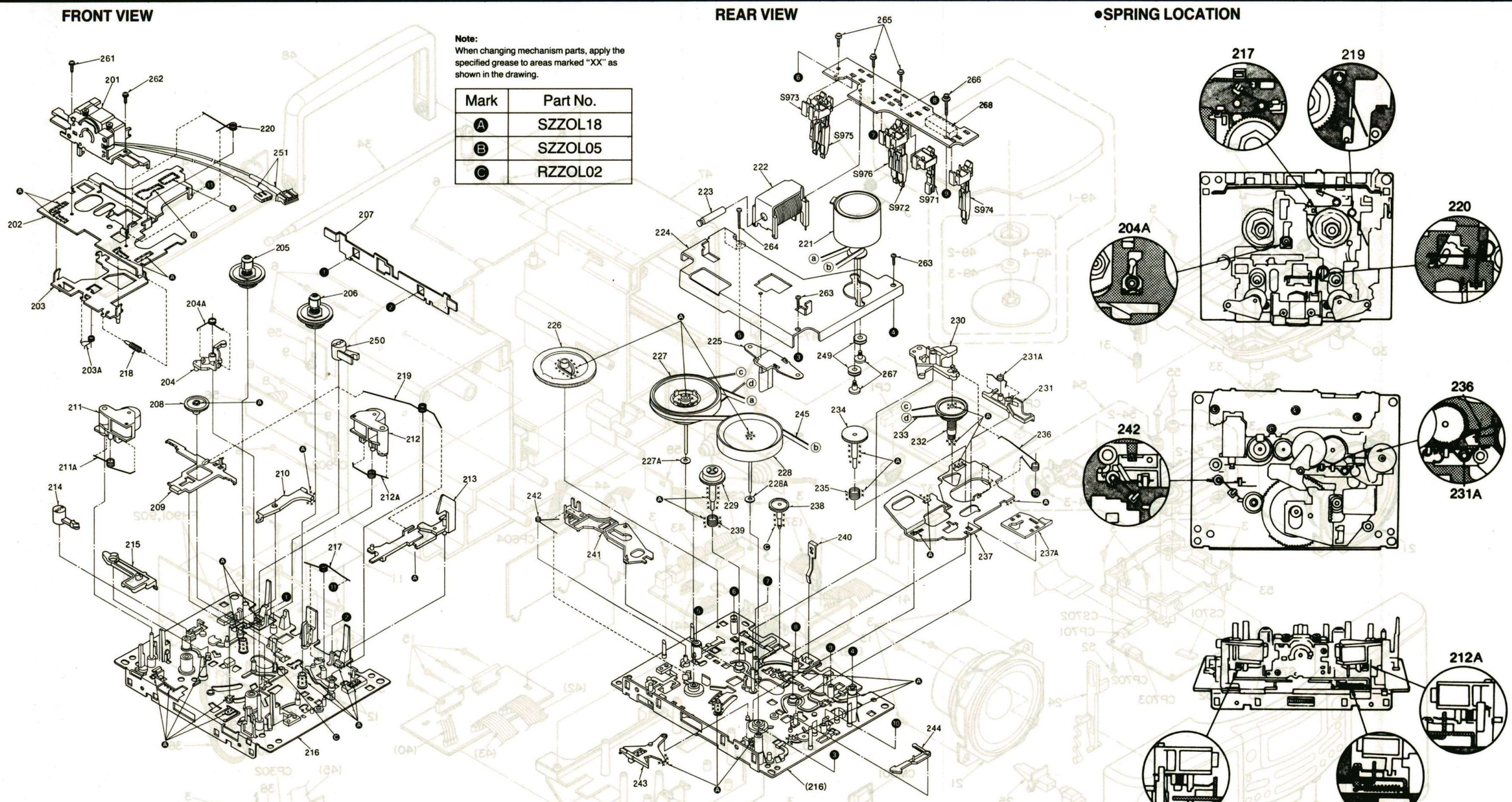

■ SPRING ILLUSTRATION

The spring illustration used shows the actual size so it can be used to check the shape of the spring.
(The illustration shows the spring separated from the mechanism.)

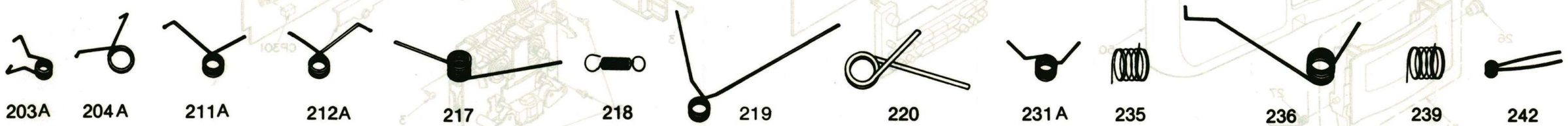

■ CABINET PARTS LOCATION

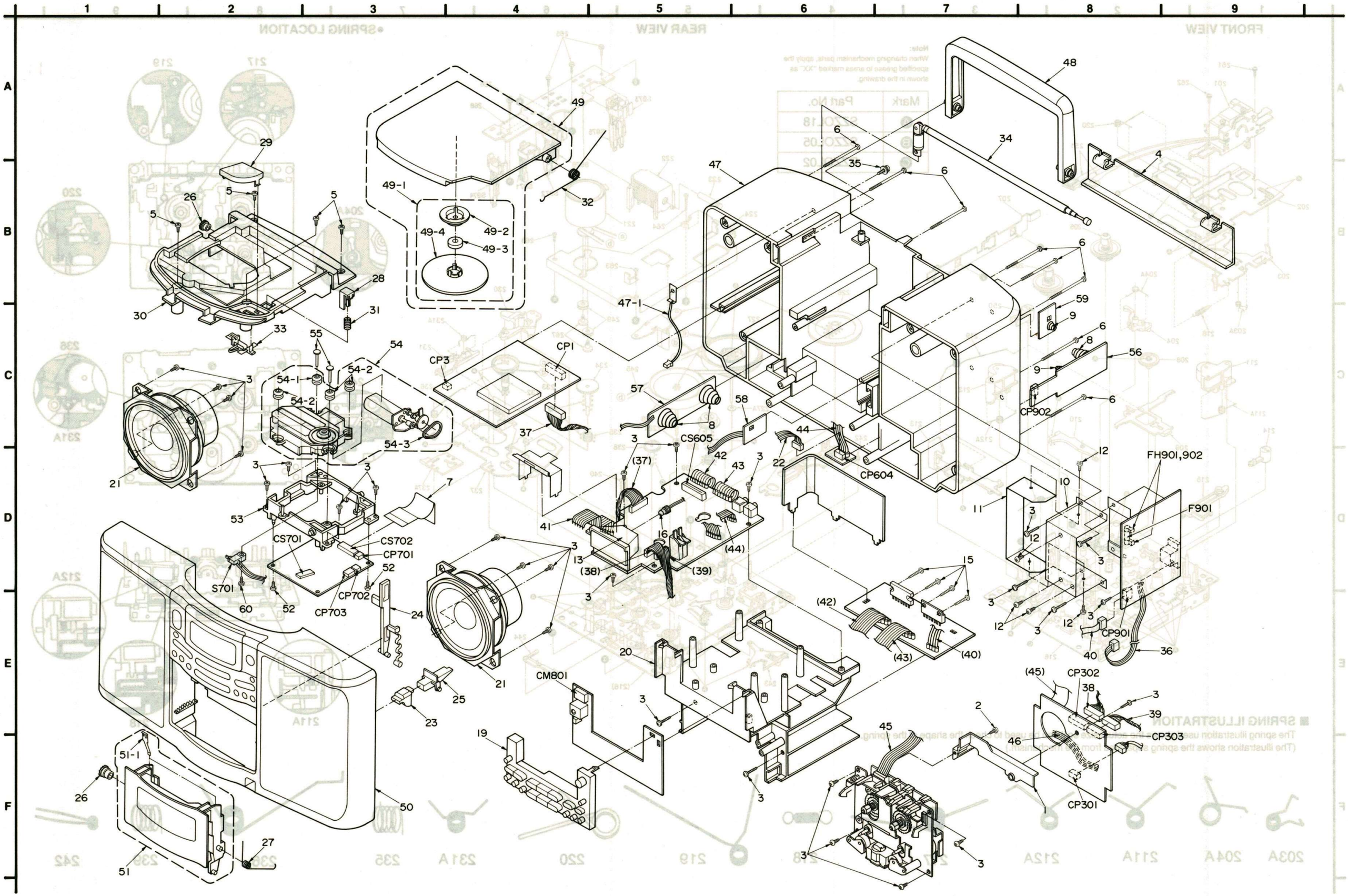

Ref. No.	Part No.	Part Name & Description	Remarks
		CABINET PARTS	
1	RMK0160	CHASSIS	
2	XTN26+6B	SCREW	
3	XTV3+12G	SCREW	
4	RKK347ZB-7E	BATTERY COVER	
5	XTN3+12GFZ	SCREW	
6	XTV3+60G	SCREW	
7	REE0265	F. P. C.	
8	RJC511ZB	BATTERY TERMINAL	
9	RJC751ZA	BATTERY TERMINAL	
10	RMA0069A-1	ANGLE	
11	RMA0592	ANGLE	
12	XTV3+6F	SCREW	
13	RMN0171	HOLDER	
15	XTV3+10F	SCREW	
16	XAM75S140G	LUMP (LAMP601)	
19	RGU0717-K	BUTTON	
20	RMK0159	CHASSIS	
21	EAS10P497B	SPEAKER	
22	REX0422	SPEAKER CABLE ASS'Y	
23	RGU0719-K	CASSETTE EJECT BUTTON	
24	RML0250	EJECT LEVER (A)	
25	RML0251	EJECT LEVER (B)	
26	RDG5782ZB	GEAR	
27	RUW170ZB	SPRING	
28	RGQ0089-K	LEVER	
29	RGU0718-K	CD EJECT BUTTON	
30	RKQ0103-K1	UPPER CABINET	
31	RMB0243	SPRING	
32	RME0025-2	SPRING	
33	RML0114	CD EJECT LEVER	
34	XEARR225CA-Y	TELESCOPIC ANTENNA	
35	XYN3+F12FY	SCREW	
36	REX0427-1	CABLE ASS'Y (W902)	(2P)
37	REX0423Y	CABLE ASS'Y (CW1)	(12P)
38	REX0424Y	CABLE ASS'Y (CW302)	(10P)
39	REX0425Y	CABLE ASS'Y (CW303)	(9P)
40	REX0426	CABLE ASS'Y (CW901)	(4P)
41	RWJ1108100QQ	FLAT CABLE (PW801)	(8P)
42	RWJ1112130QQ	FLAT CABLE (PW601)	(12P)
43	RWJ1112130QQ	FLAT CABLE (PW602)	(12P)
44	RWJ5004300QQ	FLAT CABLE (PW603)	(4P)
45	RWJ1110075QQ	FLAT CABLE (PW301)	(10P)
46	RWJ4704125KR	FLAT CABLE (W305)	(4P)
47	RFKHXDS303EG	REAR CABINET ASS'Y	(EG)
47	RFKHXDS303EB	REAR CABINET ASS'Y	(EB)
47-1	REX0428	TERMINAL ASS'Y	
48	RFKNXDS303AK	HANDLE	
49	RFKLXDS303EG	CD COVER ASS'Y	
49-1	RYF0066	DISC CLAMPER	

Ref. No.	Part No.	Part Name & Description	Remarks
49-2	RMQ0152	MAGNET HOLDER	
49-3	RHM245ZA	MAGNET	
49-4	RFKNXDS55N-K	DISC CLAMPER	
50	RFKGXDS303EG	FRONT CABINET ASS'Y	
51	RFKLXDS303BK	CASSETTE HOLDER ASS'Y	
51-1	RUS757ZA	SPRING	
52	XTV26+6G	SCREW	
53	RMK0105	CHASSIS	
54	SODD110Z	TRAVERSE DECK	
54-1	SHGD112	RUBBER	
54-2	SHGD113-1	RUBBER	
54-3	RDV0014	BELT	
55	RMS0123-1	PIN	
56	RFKFXDS303EA	BATTERY P. C. B. (A)	
57	RFKFXDS303EB	BATTERY P. C. B. (B)	
58	RFKFXDS303EC	BATTERY P. C. B. (C)	
59	RFKFXDS303ED	BATTERY P. C. B. (D)	
60	SNSD38	SCREW	
		PACKING MATERIAL	
P1	RPG1281	GIFT BOX	
P2	RPN0595	PAD ASS'Y	
P3	RPH0087	PROTECTION COVER	
		ACCESSORIES	
A1	RAK-RX320W	REMOTE CONTROLLER	
A2 ⚠	RJA0019-1K	POWER CORD, AC	(EG)
A2 ⚠	SJA193	POWER CORD, AC	(EB)
A3	RQT1577-G	INSTRUCTION MANUAL	(EB)
A3	RFKSXDS303EG	INSTRUCTION MANUAL ASS'Y	(EG)

Printed in Japan
F920619300HS/KH

15/12/2013
ORDER NO. AD9302064S2

Service Manual

Supplement

Portable Stereo CD System

Radio Cassette

RX-DS303

COMPACT disc DIGITAL AUDIO

Colour

(K) ... Black Type

Area

Suffix for Model No.	Area	Colour
(EB)	Great Britain.	(K)
(EG)	Germany, Italy and Continental Europe.	

Please file and use this supplement manual together with the service manual and simplified manual for Model No. RX-DS303, Order No. AD9206188C2.

Note: This supplement is intended to provide additional information or corrections to the existing service manual for model No. RX-DS303.
Be sure to update your service manual for future reference.

CORRECTION

■ REPLACEMENT PARTS LIST (on page 62.)

Ref. No.	Change of Part Number		Part Name & Description	Remarks
	Original →	Supplement		
CASSETTE DECK				
213	——	RUB507ZD	LEVER	Addition
219	——	RUW144ZA	SPRING	Addition

Panasonic

Printed in Japan
K930211600YH/TM

15/12/2013
ORDER NO. AD9304106S2

Service Manual

Supplement

Radio Cassette

RX-DS303

Portable Stereo CD System

Colour

(K)	Black Type
(W)	White Type

•Please file and use this Service Manual together with the service manual for Model No. RX-DS303 Order No. AD9206188C2 and AD9304106S2 (Supplement).

Areas

Suffix for Model No.	Area	Colour
(EB)	Great Britain	(K) (W)
(EG)	Europe	

■ CD Unit Update

•The CD unit used in Model RX-DS303 has been modified for improved operation in mid-production.
•This supplement includes the following information regarding the modified CD unit:

1. Printed Circuit board diagram
2. Schematic diagram
3. Troubleshooting guide
4. Block diagram
5. Measurements and adjustments
6. Function of IC terminals
7. Replacement parts list

■ How to Identify the Units with Modified CD Unit

The units with a modified CD unit can be identified by their serial number suffix label affixed to the back side. A serial number consists of ten alphanumeric characters:

○○○○○○○○○○

Suffix

e.g.) A D 1 E A 2 3 4 5 6

⇩

A D 1 E B 2 3 4 5 6

Units with the following serial number suffix after **"B"** or **later** have a modified CD unit.

■ Serial Number Label

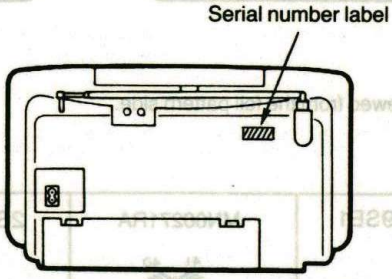

•This service manual supplement is only to be used for units with a modified CD unit.

Panasonic

■ PRINTED CIRCUIT BOARD DIAGRAM

B CD P.C.B. (REP1391A-N)

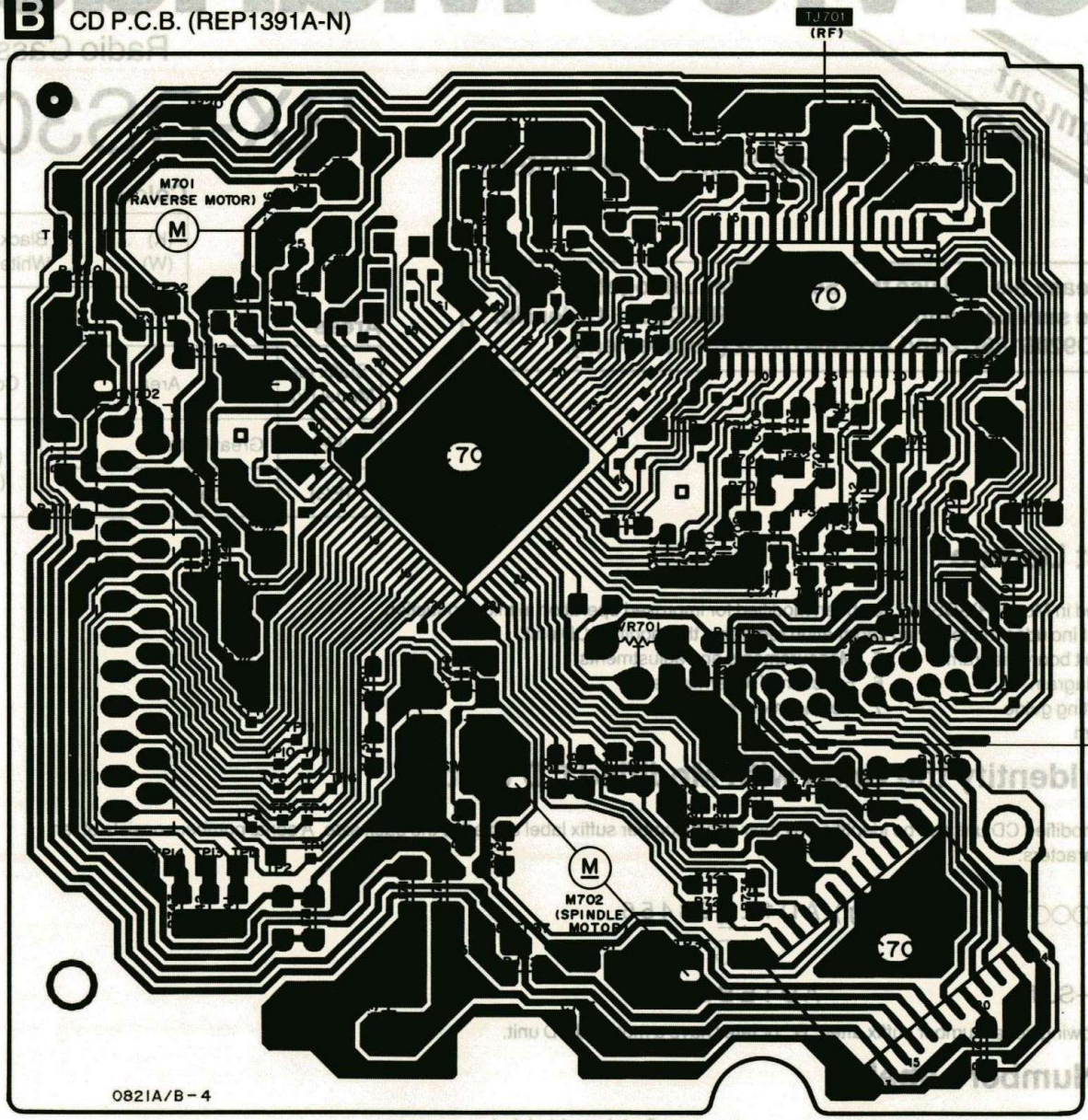

Note: This printed circuit board diagram is shown as viewed from the foil pattern side.

AN8802SCE1V	AN8389SE1	MN66271RA	2SB709STW
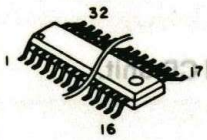	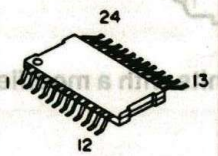	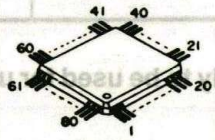	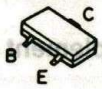

Included in this supplement are the CD PCB's foil pattern drawing and schematic diagram for the modified CD unit.
Other foil pattern drawings and schematic diagrams are not affected by the modification.

■ SCHEMATIC DIAGRAM •OPTICAL PICKUP AND CD CIRCUIT

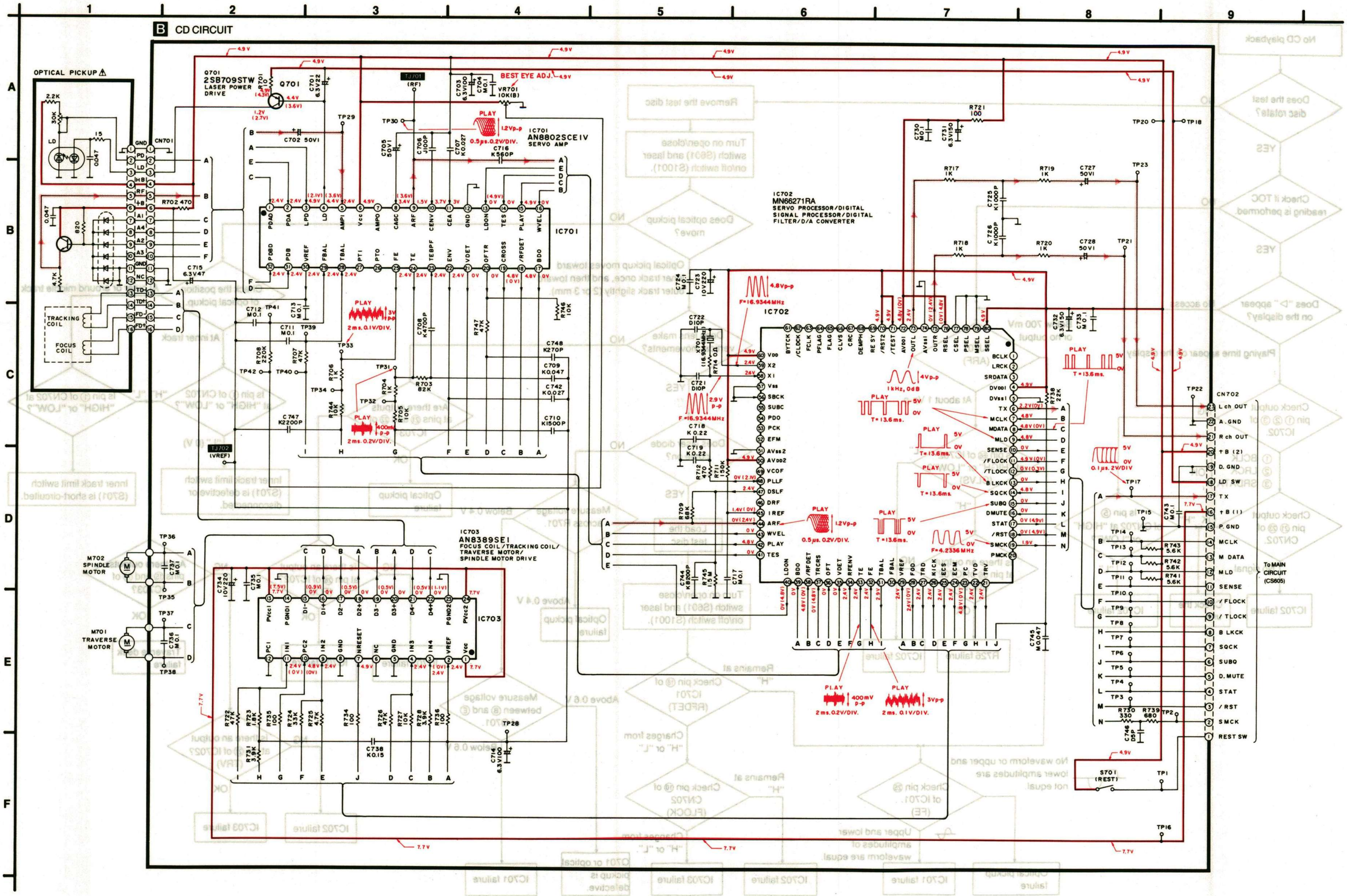

■ TROUBLESHOOTING GUIDE

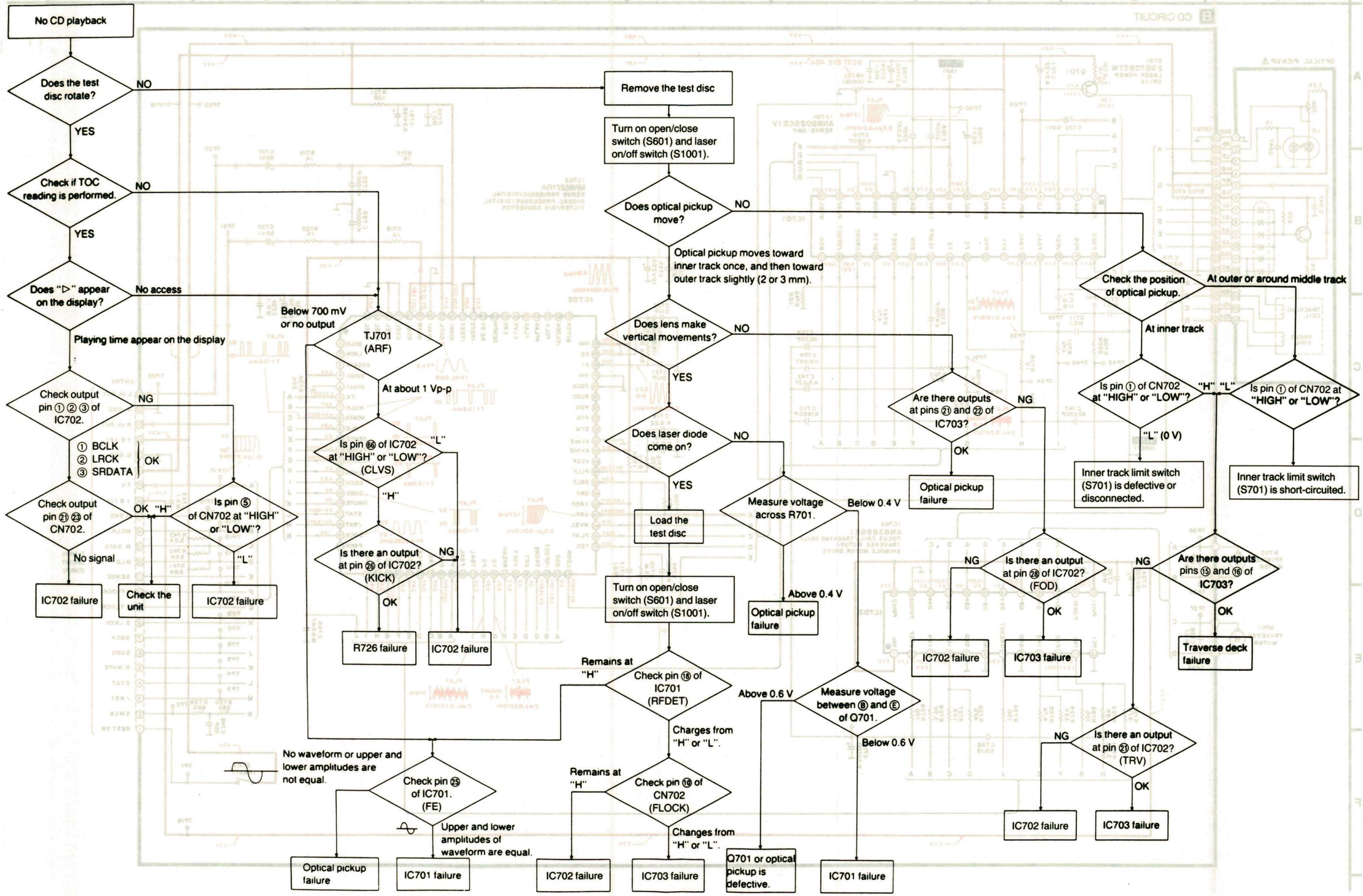

■ BLOCK DIAGRAM

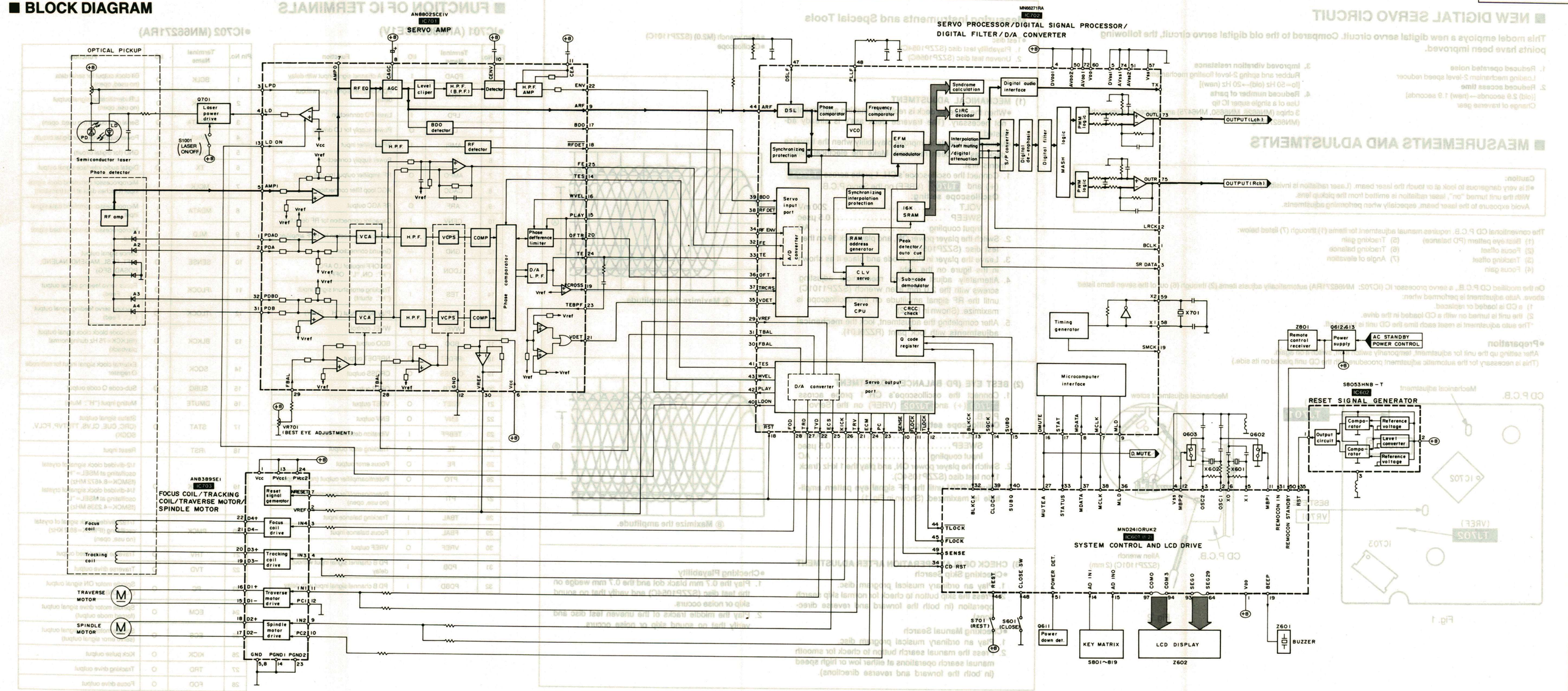

■ NEW DIGITAL SERVO CIRCUIT

This model employs a new digital servo circuit. Compared to the old digital servo circuit, the following points have been improved.

1. **Reduced operated noise**
   Loading mechanism 2-level speed reducer
2. **Reduced access time**
   [(old) 2.9 seconds→(new) 1.9 seconds]
   Change of traverse gear
3. **Improved vibration resistance**
   Rubber and spring 2-level floating mechanism
   [fo=50 Hz (old)→20 Hz (new)]
4. **Reduced number of parts**
   Use of a single super IC tip
   3 chips (MN6626, MN6650, MN6475) are reduced to a single chip (MN66271RA)

■ MEASUREMENTS AND ADJUSTMENTS

Caution:
- It is very dangerous to look at or touch the laser beam. (Laser radiation is invisible.)
  With the unit turned "on", laser radiation is emitted from the pickup lens.
  Avoid exposure to the laser beam, especially when performing adjustments.

The conventional CD P.C.B. requires manual adjustment for items (1) through (7) listed below:

(1) Best eye pattern (PD balance)
(2) Focus offset
(3) Tracking offset
(4) Focus gain
(5) Tracking gain
(6) Tracking balance
(7) Angle of elevation

On the modified CD P.C.B., a servo processor IC (IC702: MN66271RA) automatically adjusts items (2) through (6) out of the seven items listed above. Auto adjustment is performed when:
1) a CD is loaded or replaced.
2) the unit is turned on with a CD loaded in the drive.
*The auto adjustment is reset each time the CD unit is turned off.

●Preparation
After setting up the unit for adjustment, temporarily switch it off, switch it on again.
(This is necessary for the automatic adjustment procedure with the CD unit placed on its side.)

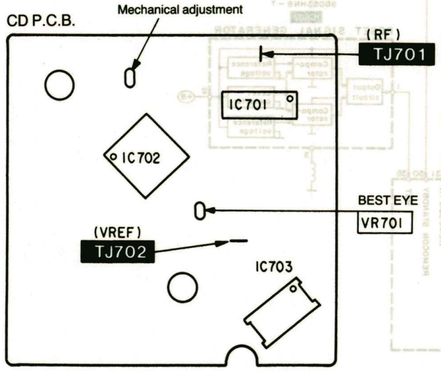

Fig. 1

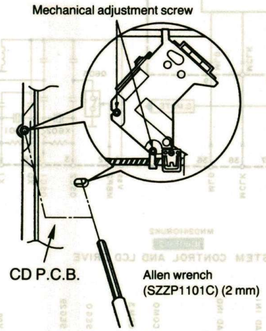

Fig. 2

Measuring Instruments and Special Tools

- Test disc
  1. Playability test disc (SZZP1054C)
  2. Uneven test disc (SZZP1056C)
- Allen wrench (M2.0) (SZZP1101C)
- Oscilloscope

(1) MECHANICAL ADJUSTMENT

- When the traverse deck is replaced, making adjustments is not necessary. (The traverse deck ass'y is already adjusted.)
- Make adjustments to improve playability when the traverse deck has not been replaced. Make the electrical adjustments first.

1. Connect the oscilloscope's CH. 1 probe across TJ701 (+) and TJ702 (VREF) on the Servo P.C.B.
   Oscilloscope setting:
   VOLT ..... 200 mV
   SWEEP ..... 0.5 µsec
   Input coupling ..... AC
2. Switch the player power **ON**, and play track **19** on the test disc (SZZP1056C).
3. Leave the player in Play mode and place it as shown in the figure on the right.
4. Alternately adjust the two mechanical adjusting screws with the 2.0 mm allen wrench (SZZP1101C) until the RF signal amplitude on the oscilloscope is maximize. (Shown in Fig. 2)
5. After completing the adjustment, lock the **mechanical adjustments** with lock paint (RZZ0L01).

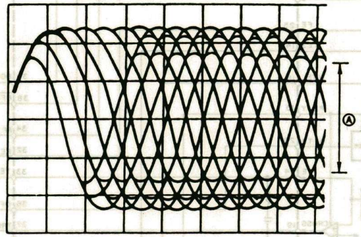

Ⓐ Maximize the amplitude.

(2) BEST EYE (PD BALANCE) ADJUSTMENT

1. Connect the oscilloscope's CH. 1 probe across TJ701 (+) and TJ702 (VREF) on the Servo P.C.B.
   Oscilloscope setting:
   VOLT ..... 200 mV
   SWEEP ..... 0.5 µsec
   Input coupling ..... AC
2. Switch the player power **ON**, and play the 1 kHz (track 1) on test disc (SZZP1054C).
3. Adjust **VR701** until the RF signal eye pattern amplitude is maximized. (Shown in Fig. 1)

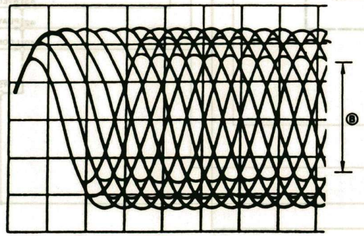

Ⓑ Maximize the amplitude.

(3) CHECK OF PLAY OPERATION AFTER ADJUSTMENT

●Checking Skip Search
1. Play an ordinary musical program disc.
2. Press the skip button to check for normal skip search operation (in both the forward and reverse directions).

●Checking Manual Search
1. Play an ordinary musical program disc.
2. Press the manual search button to check for smooth manual search operations at either low or high speed (in both the forward and reverse directions).

●Checking Playability
1. Play the 0.7 mm black dot and the 0.7 mm wedge on the test disc (SZZP1054C) and verify that no sound skip or noise occurs.
2. Play the middle tracks of the uneven test disc and verify that no sound skip or noise occurs.

■ FUNCTION OF IC TERMINALS

●IC701 (AN8802SCE1V)

Pin No.	Terminal Name	I/O	Function
1	PDAD	I	PD A channel signal input with delay
2	PDA	I	PD A channel signal input without delay
3	LPD	I	Laser PD connection
4	LD	O	Power supply for LD driving
5	AMPI	I	RF amplifier input
6	Vcc	I	Power supply connection
7	AMPO	O	RF amplifier output (no use, open)
8	CAGC	I	AGC loop filter connection
9	ARF	O	RF AGC output
10	CENV	I	Capacitor connection for RF detection
11	CEA	I	Capacitor connection for HPF amplifier
12	GND	—	Ground connection
13	LDON	I	ON/OFF input of LD APC ("H": ON, "L": OFF)
14	TES	I	Tracking error shunt signal input ("H": shunt)
15	PLAY	I	Play signal input ("H": PLAY)
16	WVEL	I	WVEL control
17	BDO	O	BDO output
18	/RFDET	O	NRFDET output
19	CROSS	O	CROSS output
20	OFTR	O	OFTR output
21	VDET	O	VDET output
22	ENV	O	ENV output
23	TEBPF	I	Vibration detection input
24	TE	O	Tracking error output
25	FE	O	Focus error output
26	PTO	O	Potentioamplifier output (no use, open)
27	PTI	I	Potentioamplifier inversion input (no use, open)
28	TBAL	I	Tracking balance input
29	FBAL	I	Focus balance input
30	VREF	O	VREF output
31	PDB	I	PD B channel signal input without delay
32	PDBD	I	PD B channel signal input with delay

●IC702 (MN66271RA)

Pin No.	Terminal Name	I/O	Function
1	BCLK	O	Bit clock output for serial data (no used, open)
2	LRCK	O	L/R identification signal output (no use, open)
3	SRDATA	O	Serial data output (no used, open)
4	DVcc1	I	Power supply input (for digital circuit)
5	DVss1	—	GND (for digital circuit)
6	TX	O	Digital audio interface signal output
7	MCLK	I	Microprocessor command clock signal input (Latches data at first transition)
8	MDATA	I	Microprocessor command data signal input
9	MLD	I	Microprocessor command load signal input
10	SENSE	O	Sence signal output (OFT, FESL, MAGEND, NAJEND, POSAD, SFG)
11	/FLOCK	O	Focus servo feeding signal output ("L": Feed)
12	/TLOCK	O	Tracking servo feeding signal output ("L": Feed)
13	BLKCK	O	Sub-code block clock signal output (fBLKCK=75 Hz during normal playback)
14	SQCK	I	External clock signal input for sub-code Q register
15	SUBQ	O	Sub-code Q code output
16	DMUTE	I	Muting input ("H": Mute)
17	STAT	O	Status signal output (CRC, CUE, CLVS, TTSTVP, FCLV, SQCK)
18	/RST	I	Reset input
19	SMCK	O	1/2-divided clock signal of crystal oscillating at MSEL="H" (fSMCK=8.4672 MHz) 1/4-divided clock signal of crystal oscillating at MSEL="L" (fSMCK=4.2336 MHz)
20	PMCK	O	1/192-divided clock signal of crystal oscillating (fPMCK=88.2 KHz) (no use, open)
21	TRV	O	Traverse forced feed output
22	TVD	O	Traverse drive output
23	PC	O	Spindle motor ON signal output ("L": ON)
24	ECM	O	Spindle motor drive signal output (forced mode output)
25	ECS	O	Spindle motor drive signal output (servo error signal output)
26	KICK	O	Kick pulse output
27	TRD	O	Tracking drive output
28	FOD	O	Focus drive output

Pin No.	Terminal Name	I/O	Function
29	VREF	I	D/A (drive) output (TVD, ECS, TRD, FOD, FBAL, TBAL) Reference voltage input
30	FBAL	O	Focus balance adjustment output (no use, open)
31	TBAL	O	Tracking balance adjustment output
32	FE	I	Focus error signal input (analog input)
33	TE	I	Tracking error signal input (analog input)
34	RFENV	I	RF envelope signal input
35	VDET	I	Vibration detection signal input ("H": detection)
36	OFT	I	Off-track signal input ("H": off track)
37	TRCRS	I	Track cross signal input
38	/RFDET	I	RF detection signal input ("L": detection)
39	BDO	I	Dropout signal input ("H": Dropout)
40	LDON	O	Laser on signal output ("H": ON)
41	TES	O	Tracking error shunt signal output ("H": shunt)
42	PLAY	O	Play signal out ("H": PLAY)
43	WVEL	O	Double speed status signal output ("H": Double speed)
44	ARF	I	RF signal input
45	IREF	I	Reference current input
46	DRF	I	DSL bias (no use, open)
47	DSLF	I/O	DSL loop filter
48	PLLF	I/O	PLL loop filter
49	VCOF	I/O	VCO loop filter (no use, open)
50	AVDD2	I	Power supply input (for analog circuit)
51	AVSS2	—	GND (for analog circuit)
52	EFM	O	EFM signal output (not use, open)
53	PCK	O	PLL extraction clock output (fPCK=4.321 MHz during normal playback) (no use, open)
54	PDO	O	Phase comparison signal of EFM and PCK signals (no use, open)
55	SUBC	O	Sub-code serial data output (no use, open)
56	SBCK	I	Clock input for sub-code serial data (no use, GND)
57	Vss	—	GND
58	X1	I	Crystal oscillating circuit input (f=16.9344 MHz)
59	X2	O	Crystal oscillation circuit output (f=16.9344 MHz)
60	VDD	I	Power supply input (for oscillating circuit)
61	BYTCK	O	Byte clock output (no use, open)

Pin No.	Terminal Name	I/O	Function
62	/CLDCK	O	Sub-code frame clock signal output (fCLDCK=7.35 kHz during normal playback) (no use, open)
63	FCLK	O	Crystal frame clock signal output (fFCLK=7.35 kHz, double=14.7 kHz) (no use, open)
64	PFLAG	O	Interpolation flag output ("H": Interpolation) (no use, open)
65	FLAG	O	Flage output (no use, open)
66	CLVS	O	Spindle servo phase synchronizing signal output ("H": CLV, "L": rough servo) (no use, open)
67	CRC	O	Sub-code CRC checked output ("H": OK, "L": NG) (no use, open)
68	DEMPH	O	De-emphasis ON signal output ("H": ON) (no use, open)
69	RESY	O	Frame resynchronizing signal output (no use, open)
70	/RST2	I	Reset input through MASH circuit ("L": Reset)
71	/TEST	I	Test input
72	AVDD1	I	Power supply input (for analog circuit)
73	OUTL	O	Left channel audio signal output
74	AVSS1	—	GND
75	OUTR	O	Right channel audio signal output
76	RSEL	I	RF signal polarity assignment input (at "H" level, RSEL="H"; at "L" level, RSEL=L)
77	CSEL	I	Crystal oscillating frequency designation input ("L": 16.9344 MHz, "H": 33/8688 MHz)
78	PSEL	I	Test input (normally, "L") (no use, GND)
79	MSEL	I	Output frequency switching for SMCK terminal "H": SMCK=8.4672 MHz "L": SMCK=4.2336 MHz (no use, GND)
80	SSEL	I	Output mode switching of SUBQ terminal ("H": Q code buffer mode)

•IC703 (AN8389SE1)

Pin No.	Terminal Name	I/O	Function
1	Vcc	I	Power supply
2	VREF	I	VREF input
3	IN4	I	Motor driver (4) input
4	IN3	I	Motor driver (3) input
5	GND	—	Ground connection
6	NC	—	No connection (GND)
7	NRESET	I	Reset input
8	GND	—	Ground connection
9	IN2	I	Motor driver (2) input
10	PC2	I	PC2 (power cut) input
11	IN1	I	Motor driver (1) input
12	PC1	I	PC1 (power cut) input (no use, GND)

Pin No.	Terminal Name	I/O	Function
13	PVCC1	I	Power supply (1) for driver
14	PGND1	—	Ground connection (1) for driver
15	D1−	O	Motor driver (1) reverse-action output
16	D1+	O	Motor driver (1) forward-action output
17	D2−	O	Motor driver (2) reverse-action output
18	D2+	O	Motor driver (2) forward-action output
19	D3−	O	Motor driver (3) reverse-action output
20	D3+	O	Motor driver (3) forward-action output
21	D4−	O	Motor driver (4) reverse-action output
22	D4+	O	Motor driver (4) forward-action output
23	PGND2	—	Ground connection (2) for driver
24	PVCC2	I	Power supply (2) for driver

■ REPLACEMENT PARTS LIST

Notes: *Important safety notice:
Components identified by ⚠ mark have special characteristics important for safety.
Furthermore, special parts which have purposes of fire-retardant (resistors), high-quality sound (capacitors), low-noise (resistors), etc. are used.
When replacing any of components, be sure to use only manufacturer's specified parts shown in the parts list.
*The parenthesized indications in the Remarks columns specify the areas. (Refer to the cover page for area.)
Parts without these indications can be used for all areas.

Ref. No.	Part Number RX-DS303 (Original)	➡ RX-DS303 (Supplement)	Description	Remarks
CABINET PARTS				
54	S0DD110Z	RAE0111Z	TRAVERSE DECK	

Ref. No.	Part No.	Part Name & Description	Remarks
		INTEGRATED CIRCUIT(S)	
IC701	AN8802SCE1V	I. C, SERVO AMP	
IC702	MN66271RA	I. C, SERVO PROCESSOR	
IC703	AN8389SE1	I. C, MOTOR DRIVE	
		TRANSISTOR	
Q701	2SB709S	TRANSISTOR	
		VARIABLE RESISTOR	
VR701	EVNDXAA00B14	V. R, BEST EYE ADJ	
		OSCILLATOR	
X701	RSXZ16M9M02T	CRYSTAL	

Ref. No.	Part No.	Part Name & Description	Remarks
		SWITCH	
S701	RSM0006-P	SW, REST	
		CONNECTOR(S)	
CN701	RJU035T016-1	SOCKET(16P)	
CN702	RJS1A6723-1Q	SOCKET(23P)	
		TEST JUMPER(S)	
TJ701	RRJ8GET001H	TEST JUMPER	
TJ702	RRJ8GET001H	TEST JUMPER	

Notes : * Capacity values are in microfarads (uF) unless specified otherwise, P=Pico-farads(pF) F=Farads(F)
* Resistance values are in ohms, unless specified otherwise, 1K=1,000(OHM) , 1M=1,000k(OHM)

Ref. No.	Part No.	Values & Remarks
		RESISTORS
R701	ERJ6GEYJ100	1/10W 10
R702	ERJ6GEYJ471V	1/10W 470
R703	ERJ6GEYJ823	1/10W 82K
R704	ERJ6GEYJ102A	1/10W 1K
R705	ERJ6GEYJ103V	1/10W 10K
R706	ERJ6GEYJ102A	1/10W 1K
R707	ERJ6GEYJ473V	1/10W 47K
R708	ERJ6GEYJ224V	1/10W 220K
R709	ERJ6GEYJ683V	1/10W 68K
R711	ERJ6GEYJ154V	1/10W 150K
R712	ERJ6GEYJ471V	1/10W 470
R714	ERJ6GEY0R00A	1/10W 0.00
R717	ERJ6GEYJ102A	1/10W 1K
R718	ERJ6GEYJ102A	1/10W 1K
R719	ERJ6GEYJ102A	1/10W 1K
R720	ERJ6GEYJ102A	1/10W 1K
R721	ERJ8GEYJ101V	1/10W 100
R722	ERJ6GEYJ473V	1/10W 47K
R723	ERJ6GEYJ182V	1/10W 1.8K
R724	ERJ6GEYJ333V	1/10W 33K
R725	ERJ6GEYJ472V	1/10W 4.7K
R726	ERJ6GEYJ473V	1/10W 47K
R727	ERJ6GEYJ103V	1/10W 10K
R728	ERJ6GEYJ392V	1/10W 3.9K
R730	ERJ6GEYJ331V	1/10W 330K
R731	ERJ6GEYJ392V	1/10W 3.9K
R734	ERJ6GEYJ101V	1/10W 100
R735	ERJ6GEYJ101V	1/10W 100
R736	ERJ6GEYJ101V	1/10W 100
R738	ERJ6GEYJ223V	1/10W 22K
R739	ERJ6GEYJ681V	1/10W 680
R741	ERJ6GEYJ562V	1/10W 5.6K
R742	ERJ6GEYJ562V	1/10W 5.6K
R743	ERJ6GEYJ562V	1/10W 5.6K
R744	ERJ6GEYJ103V	1/10W 10K
R745	ERJ6GEYJ155V	1/10W 1.5M
R746	ERJ8GEYJ103V	1/8W 10K
R747	ERJ6GEYJ473V	1/10W 47K
		CAPACITORS
C701	ECEA0JKA220	6.3V 22U
C702	ECEA1HKA010I	50V 1U
C703	ECEA0JKA101I	6.3V 100U
C704	ECUZ1E104MBN	25V 0.1U
C705	ECEA1HKA010I	50V 1U
C706	ECUE1H101JCN	50V 100P
C708	ECUE1H472KBN	50V 4700P
C709	ECUE1C473KBN	16V 0.047U
C710	ECUE1H152KBN	50V 1500P
C711	ECUZ1E104MBN	25V 0.1U
C712	ECUZ1E104MBN	25V 0.1U
C713	ECUV1C104MBM	16V 0.1U
C714	ECEA0JKA101I	6.3V 100U
C715	ECEA0JKA470I	6.3V 47U
C716	ECUE1H561KBN	50V 560P
C717	ECUZ1E104MBN	25V 0.1U
C718	ECUV1C224KBM	16V 0.22U
C719	ECUV1C224KBM	16V 0.22U
C721	ECUE1H100DCN	50V 10P
C722	ECUE1H100DCN	50V 10P
C723	ECEA1AKA221I	10V 220U
C724	ECUV1C104MBM	16V 0.1U
C725	ECUE1H102KBN	50V 1000P
C726	ECUE1H102KBN	50V 1000P
C727	ECEA1HKA010I	50V 1U
C728	ECEA1HKA010I	50V 1U
C730	ECUZ1E104MBN	25V 0.1U
C731	ECA05SD151I	6.3V 150U
C732	ECA05SD151I	6.3V 150U
C733	ECUZ1E104MBN	25V 0.1U
C734	ECEA1AKA221I	10V 220U
C735	ECUZNE104MBN	25V 0.1U
C736	ECUZNE104MBN	25V 0.1U
C737	ECUZNE104MBN	25V 0.1U
C738	ECUV1C154KBN	16V 0.15U
C742	ECUV1E273KBN	25V 0.027U
C743	ECUZNE104MBN	25V 0.1U
C744	ECUE1E822KBN	25V 8200P
C745	ECUE1C473MBN	16V 0.047U
C746	ECUE1H050DCN	50V 5P
C747	ECUE1H222KBN	50V 2200P
C748	ECUV1H271KBM	50V 270P
		CHIP JUMPERS
RJ701	ERJ8GEY0R00A	1/10W 0
RJ702	ERJ8GEY0R00A	1/10W 0
RJ703	ERJ8GEY0R00A	1/10W 0
RJ704	ERJ8GEY0R00A	1/10W 0
RJ705	ERJ8GEY0R00A	1/10W 0
RJ706	ERJ8GEY0R00A	1/10W 0
RJ707	ERJ8GEY0R00A	1/10W 0
RJ708	ERJ8GEY0R00A	1/10W 0
RJ709	ERJ8GEY0R00A	1/10W 0
RJ710	ERJ8GEY0R00A	1/10W 0
RJ711	ERJ8GEY0R00A	1/10W 0
RJ712	ERJ8GEY0R00A	1/10W 0
RJ713	ERJ8GEY0R00A	1/10W 0
RJ714	ERJ8GEY0R00A	1/10W 0
RJ715	ERJ8GEY0R00A	1/10W 0
RJ716	ERJ8GEY0R00A	1/10W 0
RJ717	ERJ8GEY0R00A	1/10W 0
RJ721	ERJ6GEY0R00A	1/10W 0
RJ722	ERJ6GEY0R00A	1/10W 0
RJ724	ERJ6GEY0R00A	1/10W 0
RJ725	ERJ6GEY0R00A	1/10W 0
RJ726	ERJ6GEY0R00A	1/10W 0

Printed in Japan
F930310500HS/KH