ORDER NO. AD9003049C2

Service Manual

Portable Stereo CD System

Radio Cassette

RX-DT5

COMPACT disc DIGITAL AUDIO

DIGITAL

Color

(K)	Black Type

Area

Country Code	Areas	Color
(EB)	Great Britain	(K)
(EG)	Continental Europe and F.R. Germany	

RX-DS30 MECHANISM SERIES (AR300)

■ SPECIFICATIONS

General:

Power Requirement:	AC; (EB)...240V, 50 Hz (EG)...220 V, 50 Hz Battery; 15 V (10 R20/LR20, UM-1 batteries)
Power Consumption:	43 W (AC only)
Power Output:	50 W (25 W×2)...PMPO
Speaker:	12 cm×2 PM Dynamic speaker (2.7Ω)
Input:	MIX MIC; 2.5 mV/200~600Ω, Ø3.5 AUX; 200 mV/47 kΩ
Output:	HEADPHONES; 32Ω, Ø3.5
Dimensions:	660 (W)×198 (H)×251 (D) mm
Weight:	6.6 kg without batteries

Disc Player Section:

Sampling Frequency:	44.1 kHz
D-A Conversion:	2 DAC 4 time over sampling
Beam Source:	Semiconductor laser (wavelength 780 nm)
No. of Channels:	2 channels, stereo
Frequency Range:	20~20,000 Hz (+1/−2 dB)
Dynamic Range:	93 dB (1 kHz)
S/N Ratio:	97 dB (1 kHz)
Wow and Flutter:	Unmeasurable

Radio Section:

Frequency Range:	FM; 87.5~108 MHz MW; 522~1611 kHz LW; 144~288 kHz
Intermediate Frequency:	FM; 10.7 MHz AM; 459 kHz
Sensitivity:	FM; 11 dB/50 mW output (−3 dB Lim/Sens) MW; 34 dB/m/50 mW output LW; 34 dB/m/50 mW output

Tape Deck Section:

Frequency Range:	40~16,000 Hz (with normal tape) 40~17,000 Hz (with CrO_2 tape)
Recording System:	AC bias, AC erase
Tape Speed:	4.8 cm/s
Monitor System:	Variable sound monitor
Track System:	4-track 2-channel stereo recording and playback

Timer/Clock:

Power Supply:	Battery; DC 6 V (4 R6/LR6, UM-3 batteries)

Weights and dimensions shown are approximate.
Design and specifications are subject to change without notice.

Panasonic

Matsushita Electric Industrial Co., Ltd.
Central P.O. Box 288, Osaka 530-91, Japan

CONTENTS

CAUTION:
THIS PRODUCT UTILIZES A LASER.
USE OF CONTROLS OR ADJUSTMENTS OR PERFORMANCE OF PROCEDURES OTHER THAN THOSE SPECIFIED HEREIN MAY RESULT IN HAZARDOUS RADIATION EXPOSURE.

PRECAUTION OF LASER DIODE

CAUTION: This product utilizes a laser diode with the unit turned "on", invisible laser radiation is emitted from the pick up lens.

Wave length: 780 nm
Maximum output radiation power from pick up: 100 μW/VDE

Laser radiation from the pick up lens is safety level, but be sure the followings:

1. Do not disassemble the optical pick up unit, since radiation from exposed laserd diode is dangerous.
2. Do not adjust the variable resistor on the pickup unit. It was already adjusted.
3. Do not look at the focus lens using optical instruments.
4. Recommend not to look at pick up lens for a long time.

ACHTUNG: Dieses produkt enthält eine laserdiode. Im eingeschalteten zustand wird unsichtbare laserstrahlung von der lasereinheit abgestrahlt.

Wellenlänge: 780 nm
Maximale strehlungsleistung der lasereinheit: 100 μW/VDE

Die strahlung an der lasereinheit ist ungefährlich, wenn folgende punkte beachtet werden:

1. Die lasereinheit nicht zerlegen, da die strahlung an der freigelegten laserdiode gefährlich ist.
2. Den werksseitig justierten einstellregler der lasereinreit nicht verstellen.
3. Nicht mit optischen instrumenten in die fokussierlinse blicken.
4. Nicht über längere zeit in die fokussierlinse blicken.

ADVARSEL: I dette a apparat anvendes laser.

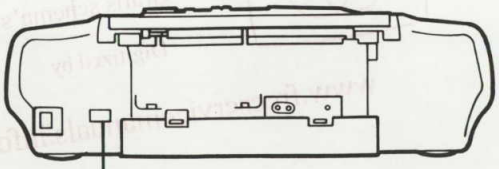

CLASS 1
LASER PRODUCT

LUOKAN 1 LASERLAITE

DANGER-Invisible laser radiation when open and interlock defeated. AVOID DIRECT EXPOSURE TO BEAM.
(Inside of product)

VORSICHT-Unsichtbare Laserstrahlung, wenn Abdeckung geöffnet und Sicherheitsverriegelung überbrückt. Nicht dem Strahl aussetzen.
(Im Inneren des Gerätes)

ADVARSEL: USYNLIG LASERSTRÅLING VED ÅBNING, NÅR SIKKERHEDSAFBRYDERE ER UDE AF FUNKTION. UNDGÅ UDSÆTTELSE FOR STRÅLING.
(Indersiden at apparatet)

LOCATION OF CONTROLS

TUNER/GENERAL CONTROLS

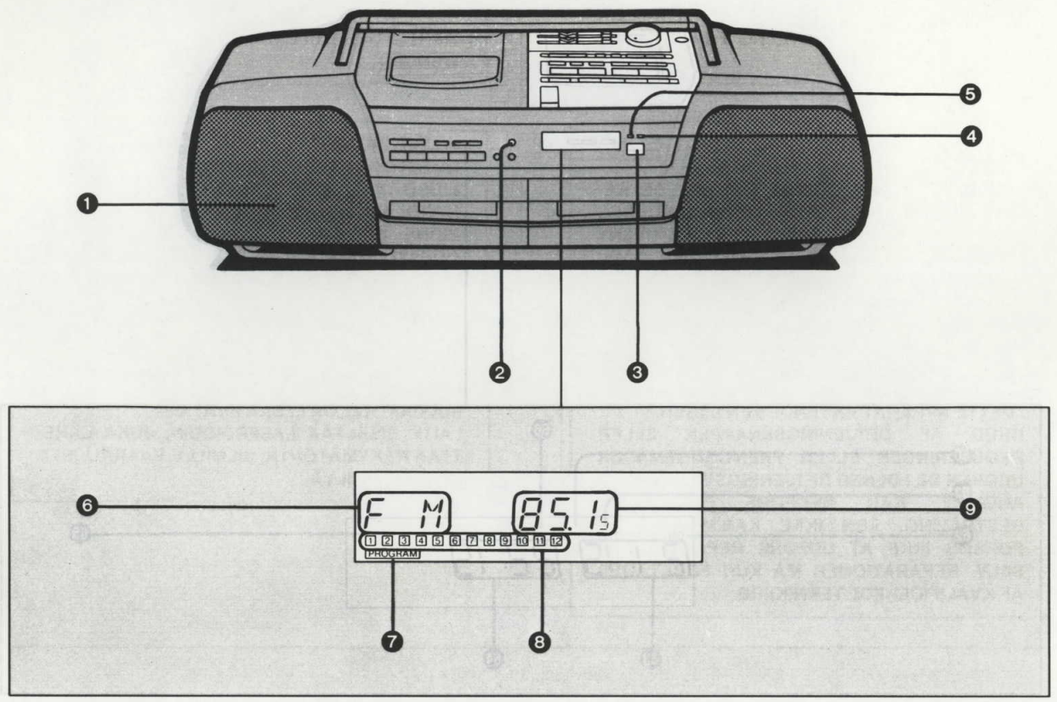

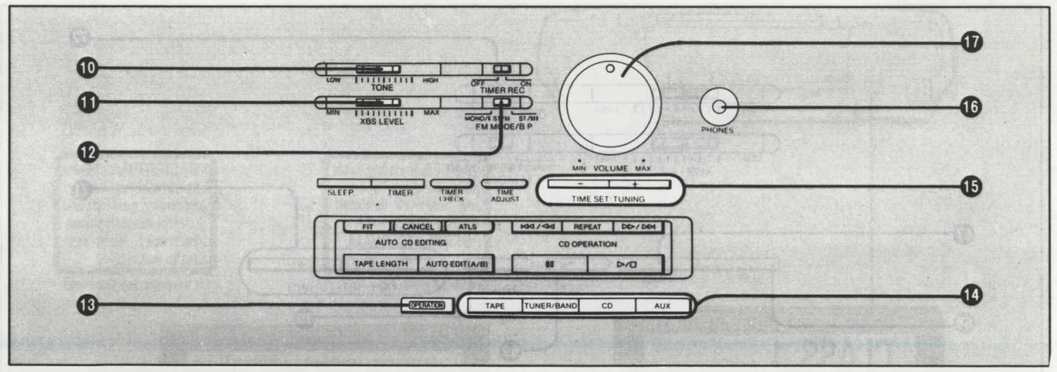

CD-CONTROLS

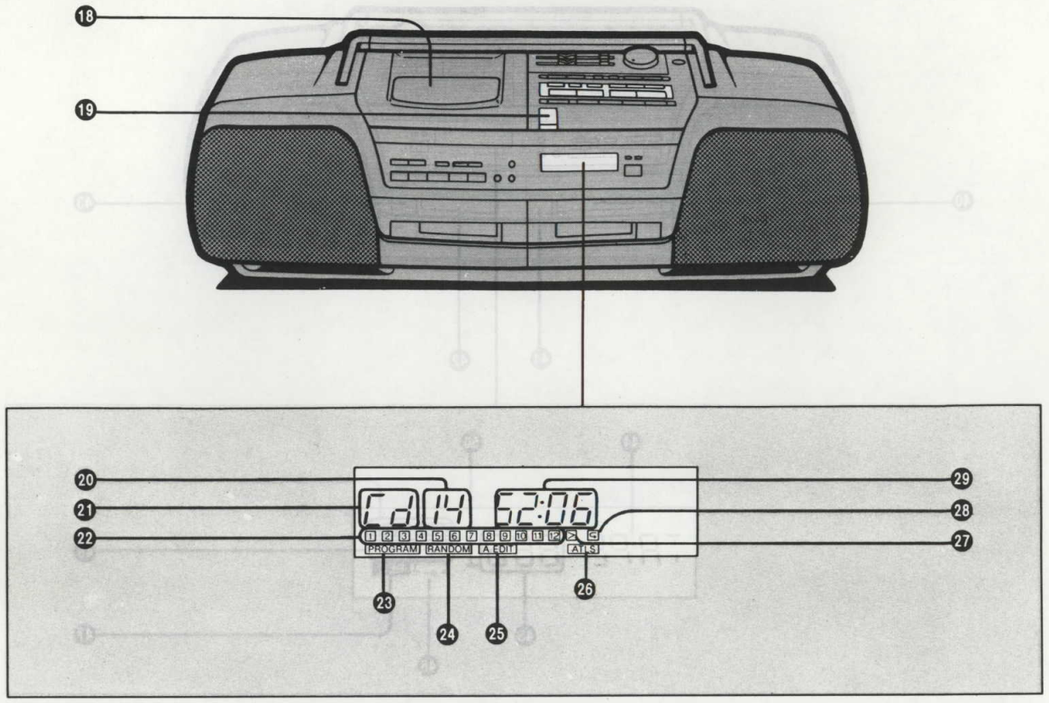

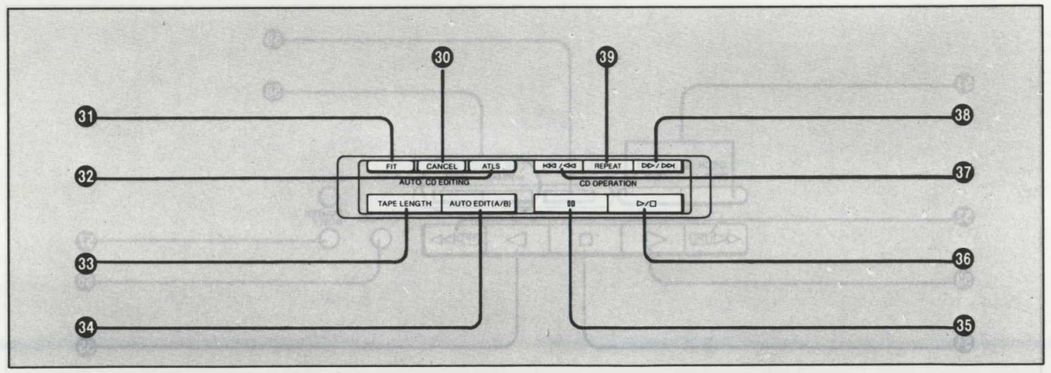

TUNER/GENERAL CONTROLS

1. Speakers (12 cm, 2.7Ω)
2. Display Selector Switch (DISPLAY)
3. Remote Control Sensor (SENSOR)
4. Tuning Indicator (TUNING)
5. Operation/Battery Check/AC Connection Indicator (OPR/BATT/STANDBY)
6. Band Indicators (FM/LW/MW)
7. Program Indicator (PROGRAM)
8. Preset Station Display
9. Frequency Display
10. Tone Control (TONE)
11. XBS Level Control (XBS LEVEL)
12. FM Mode/Beat Proof Switch (FM MODE/B.P)
13. Operation Switch (OPERATION)
    The operation can be turned on by pressing one of the Function Selector Buttons.
14. Function Selector Buttons (TAPE • TUNER/BAND • CD • AUX)
    The TUNER/BAND Button also function as the band selector.
15. Tuning Buttons (TIME SET/TUNING)
16. Headphone Jack (PHONES) (∅3.5, 32Ω)
17. Volume Control (VOLUME)

CD CONTROLS

18. Disc Holder
19. CD Eject Button (CD EJECT)
20. Track No. Display
21. CD Mode Indicator
22. Music Matrix
23. Program Indicator (PROGRAM)
24. Random Indicator (RANDOM)
25. Auto Edit Indicator (A. EDIT)
26. ATLS Indicator (ATLS)
27. Over Mark Indicator (>)
28. Repeat Indicator ( )
29. Playing Time Display
30. Cancel Button (CANCEL)
31. Fit Button (FIT)
32. ATLS Button (ATLS)
33. Tape Length Button (TAPE LENGTH)
34. Auto Edit Button [AUTO EDIT (A/B)]
35. Pause Button (▯▯)
36. Play/Stop Button (▷/□)
37. Skip/Search Button (⏮/⏪)
38. Skip/Search Button (⏩/⏭)
39. Repeat Button (REPEAT)

DECK CONTROLS

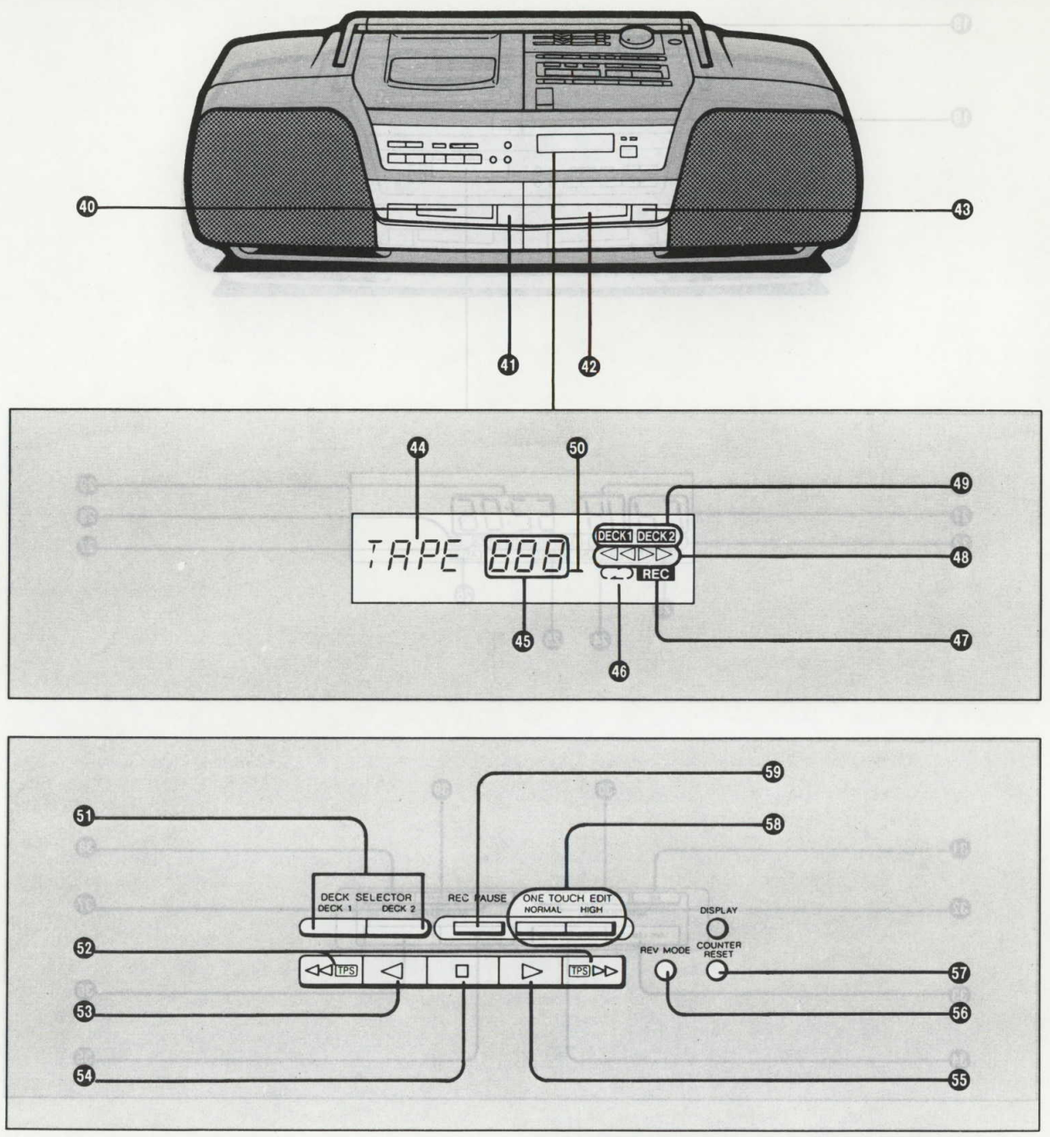

TIMER CONTROLS

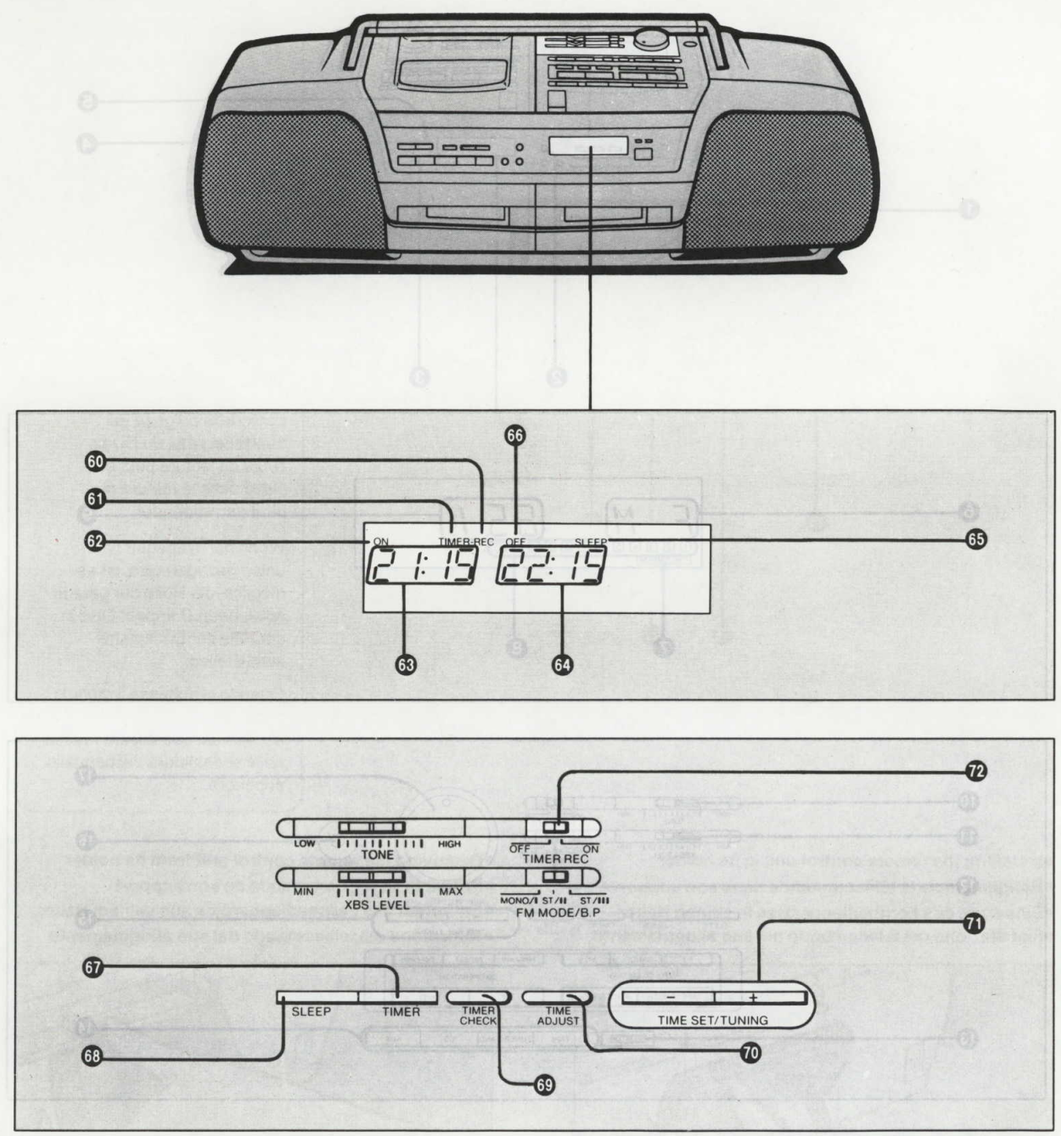

DECK CONTROLS

- 40 Deck 1 Cassette Holder
- 41 Deck 1 Eject Button (EJECT)
- 42 Deck 2 Cassette Holder
- 43 Deck 2 Eject Button (EJECT)
- 44 Tape Mode Indicator
- 45 Tape Counter
- 46 Reverse Mode Indicator
- 47 Recording Indicator (REC)
- 48 Direction Indicator
- 49 Deck 1, 2 Indicators (DECK 1 DECK 2)
- 50 Running Indicator
- 51 Deck Selector Buttons (DECK SELECTOR)
- 52 Fast/TPS Button (◁◁ TPS ▷▷)
- 53 Reverse Side Playback Button (◁)
- 54 Stop button (□)
- 55 Front Side Playback Button (▷)
- 56 Reverse Mode Selector Switch (REV MODE)
- 57 Counter Reset Button (COUNTER RESET)
- 58 Edit Recording Button (ONE TOUCH EDIT)
- 59 Recording Pause Button (REC PAUSE)

TIMER CONTROLS

- 60 Timer Recording Indicator (TIMER-REC)
- 61 Timer Indicator (TIMER)
- 62 Timer ON Time Indicator (ON)
- 63 Timer ON Time/Play Mode Indicator
- 64 Timer OFF Time/Time Display
- 65 Sleep Indicator (SLEEP)
- 66 Timer OFF Time Indicator (OFF)
- 67 Timer Button (TIMER)
- 68 Sleep Button (SLEEP)
- 69 Timer Check Button (TIMER CHECK)
- 70 Time Adjust Button (TIME ADJUST)
- 71 Time/Sleep Time Adjust Buttons (TIME SET/TUNING)
- 72 Timer Recording Switch (TIMER-REC)

REAR PANEL

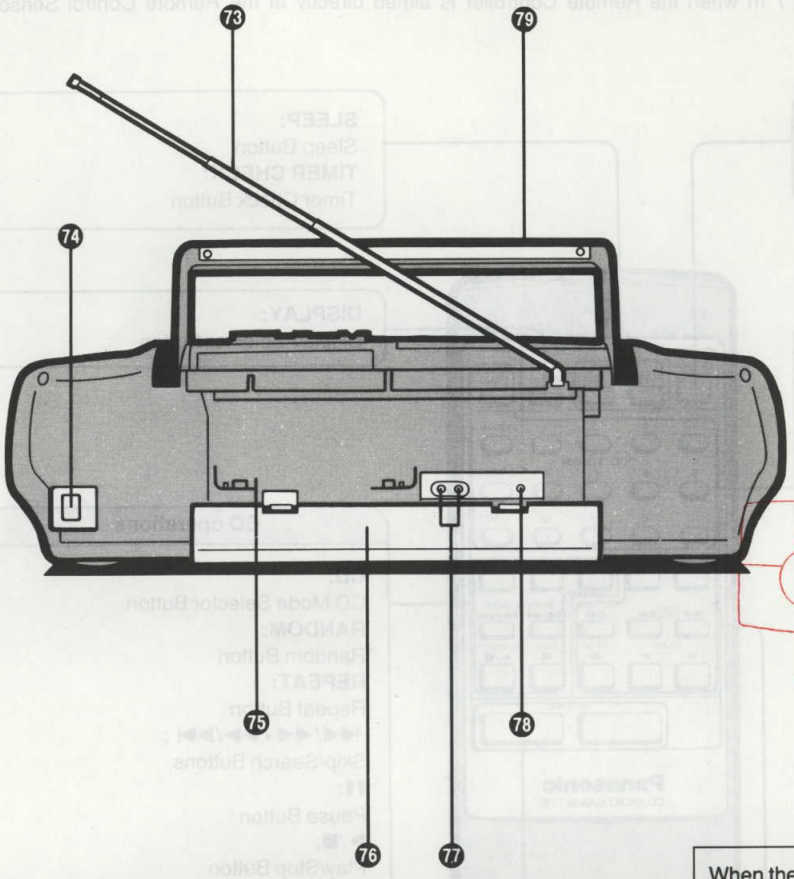

CD Jacket Stand

When the handle is pulled down, the jacket of the CD now being played can be stood up in the groove of the top panel.

When the tape is caught in the pinch roller, etc. Release the tape by tuning the pulley on the motor with the screwdriver in the direction of the arrow.

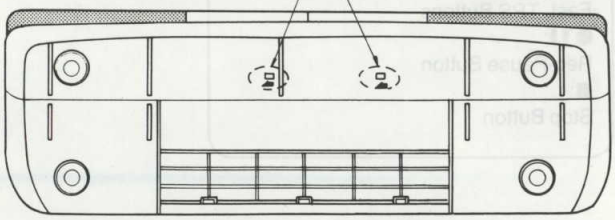

REAR PANEL

- ⑬ **Telescopic Antenna**
- ⑭ **AC Socket (AC IN ~)**
- ⑮ **Remote Control Holder**
- ⑯ **Battery Compartment Cover**
- ⑰ **Auxiliary Input Jacks (AUX IN) (200 mV/47 kΩ)**
- ⑱ **Mixing Mic Jack (MIX MIC) (∅3.5, 200~600Ω)**
- ⑲ **Handle**

•Installing the remote control unit in its holder

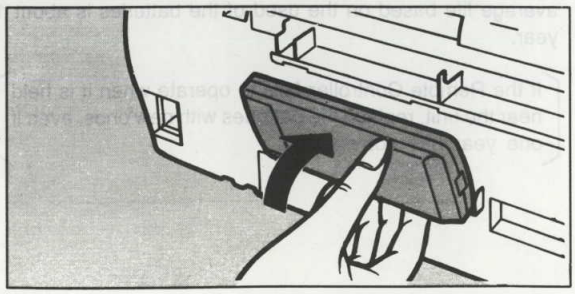

•Removing the remote control unit from its holder

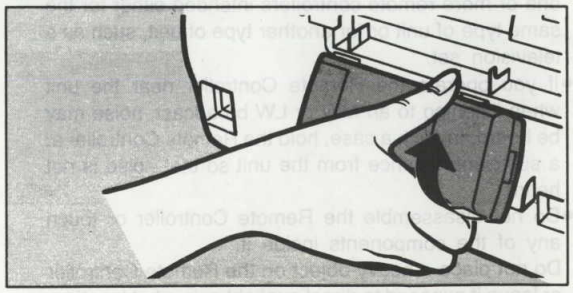

•Remote control operation

•The receiving angle is approx. 60° (30° in each of the left, right, up, and down directions).
•The maximum usable distance in about 7 m when the Remote Controller is aimed directly at the Remote Control Sensor.

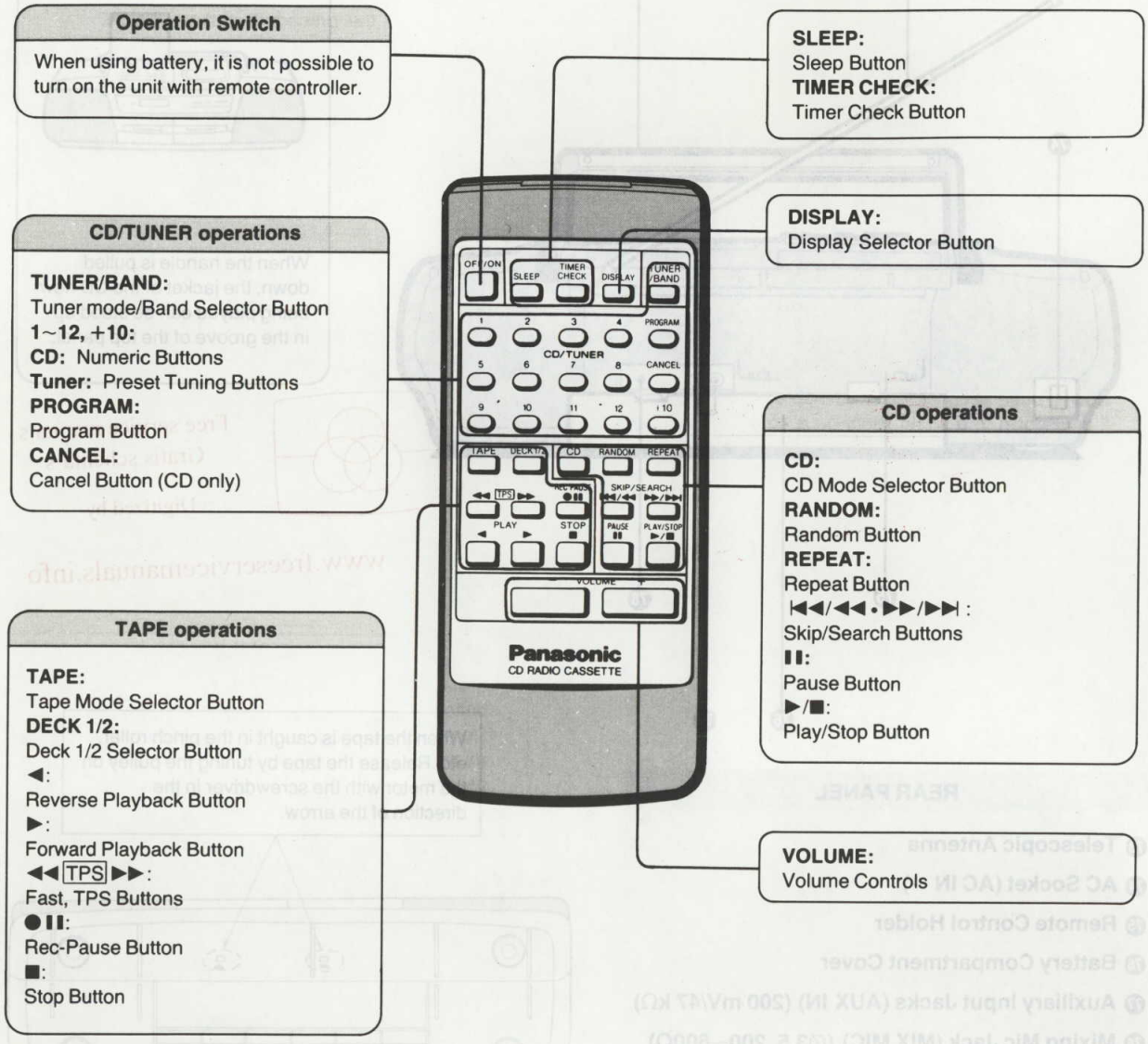

•Do not operate the Remote Controller of this unit near a unit which is designed to operate using a different remote controller.
•Do not simultaneously use this Remote Controller and one or more remote controllers intended either for the same type of unit or for another type of unit, such as a television set.
•If you operate the Remote Controller near the unit when listening to an MW or LW broadcast, noise may be heard. In such a case, hold the Remote Controller at a sufficient distance from the unit so that noise is not heard.
•Do not disassemble the Remote Controller or touch any of the components inside it.
Do not place a heavy object on the Remote Controller or leave it exposed to direct sunlight or in a hot location.
•Do not spill liquids on the Remote Controller. This may cause damage to the controller.

■ Replacement interval of Remote Controller batteries

Although the life of the batteries will vary depending upon the number of times that the Remote Controller is used, the average life based on the used of the batteries is about 1 year.

(If the Remote Controller fails to operate when it is held near the unit, replace the batteries with new ones, even if one year has not elapsed.)

HADLING PRECAUTIONS FOR TRAVERSE DECK

The laser diode in the traverse deck (optical pickup) may break down due to potential difference caused by static electricity of clothes or human body.
So, be careful of electrostatic breakdown during repair of the traverse deck (optical pickup).

- **Handling of traverse deck (optical pickup)**

1. Do not subject the traverse deck (optical pickup) to static electricity as it is extremely sensitive to electrical shock.
2. To prevent the breakdown of the laser diode, an anti-static shorting pin is inserted into the flexible board (FPC board).
   When removing or connecting the short pin, finish the job in as short time as possible.
3. Take care not to apply excessive stress to the flexible board (FPC board).
4. Do not turn the variable resistor (laser power adjustment). It has already been adjusted.

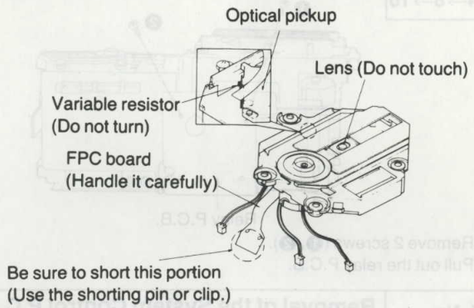

- **Grounding for electrostatic breakdown prevention**

1. Human body grounding
   Use the anti-static wrist strap to relieve the static electricity from your body.
2. Work table grounding
   Put a conductive material (sheet) or steel sheet on the area where the optical pickup is placed, and ground the sheet.

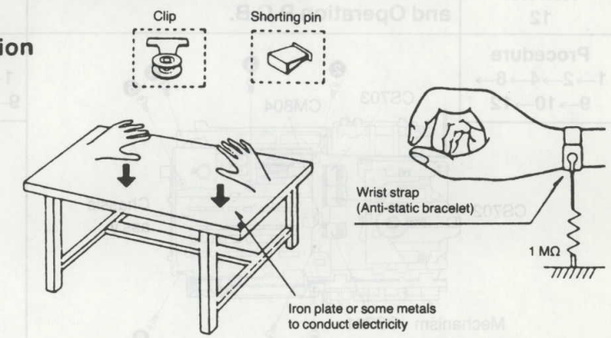

Caution:
The static electricity of your clothes will not be grounded through the wrist strap. So, take care not to let your clothes touch the optical pickup.

DISASSEMBLY INSTRUCTIONS

Ref. No. 1 — Removal of the Handle

Procedure 1

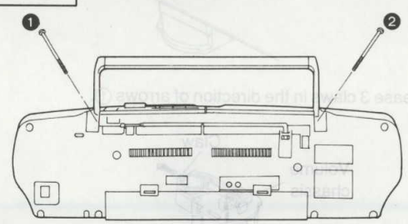

1. Remove 2 screws (❶, ❷).
2. Slide out the Handle.

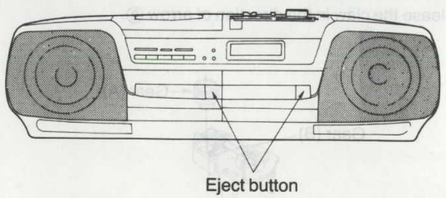

3. Press the eject button and open the cassette holder.

Ref. No. 2 — Removal of the Front Cabinet

Procedure 1→2

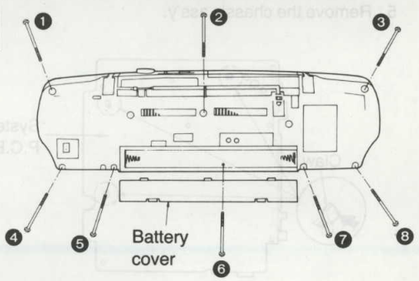

1. Remove the battery cover.
2. Remove 8 screws (❶~❽).

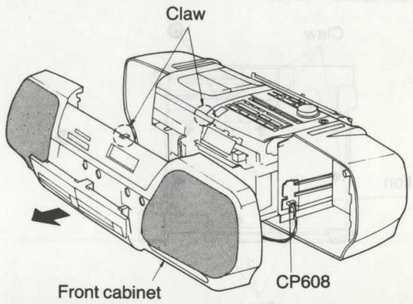

4. Remove the front cabinet in the direction of arrow.
5. Remove the claw.
6. Remove the connector (CP608).

Ref. No. 3 — Removal of the Mechanism

Procedure 1→2→3

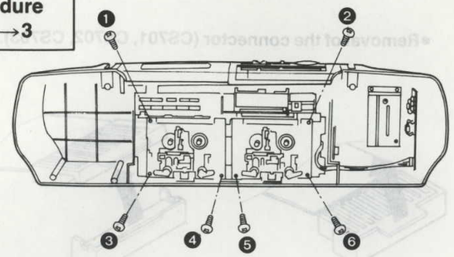

1. Remove 6 screws (❶~❻).

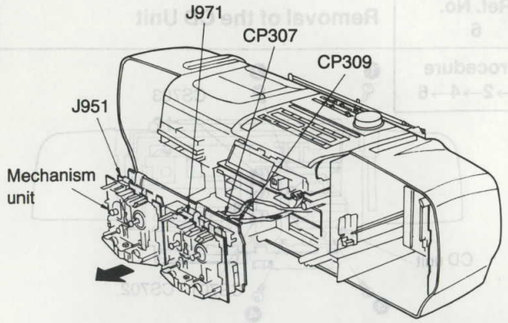

2. Remove the mechanism unit in the direction of arrow.
3. Remove 4 connectors (CP307, CP309, J971, J951).

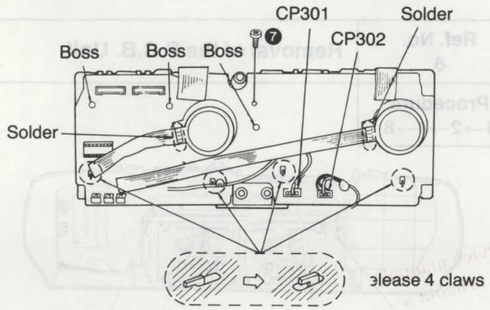

4. Remove 2 solders.
5. Remove 2 connectors (CP301, CP302).
6. Remove the screw (❼).
7. Release 3 bosses.

•Removal of the connector (J971, J951).

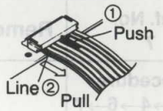

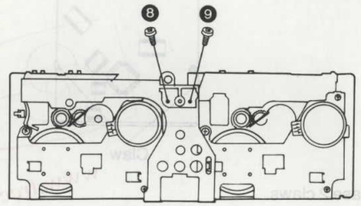

8. Remove 2 screws (❽, ❾).

Ref. No. 4 — Removal of the Upper Cabinet

Procedure 1→2→4

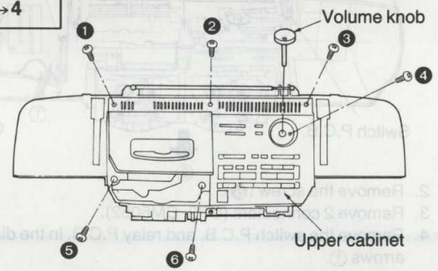

1. Press the CD eject button and open the CD cover.
2. Remove the volume knob.
3. Remove 6 screws (❶~❻).

•Removal of the volume knob.

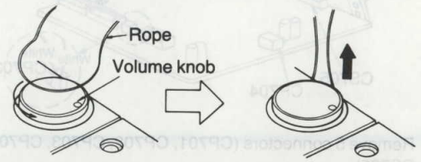

Ref. No. 5 — Removal of the Mechanism Button and Mechanism Control P.C.B.

Procedure 1→2→4→5

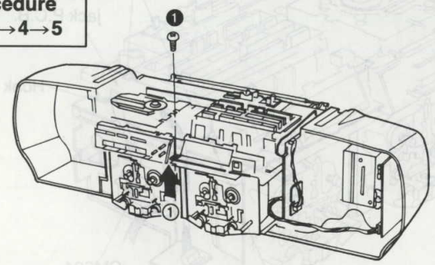

1. Remove the screw (❶).
2. Remove the button in the direction of arrow ①.

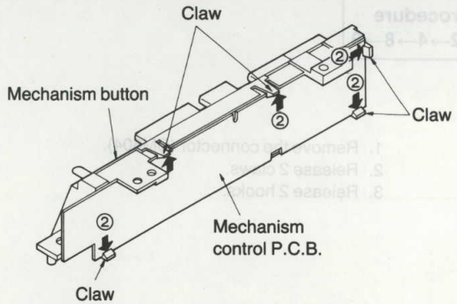

3. Release 5 claws in the direction of arrows ②.

Ref. No. 6 — Removal of the CD Unit

Procedure 1→2→4→6

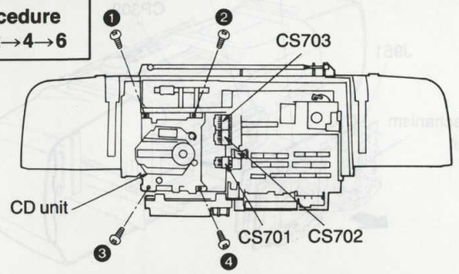

1. Remove 4 screws (❶~❹).
2. Remove 3 connectors (CS701, CS702, CS703).

●Removal of the connector (CS701, CS702, CS703).

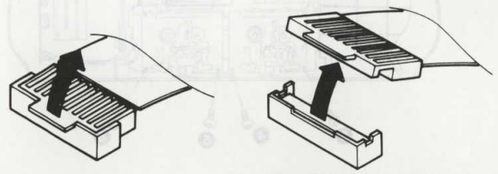

Ref. No. 7 — Removal of the CD P.C.B.

Procedure 1→2→4→6→7

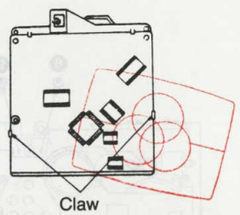

1. Release 2 claws.

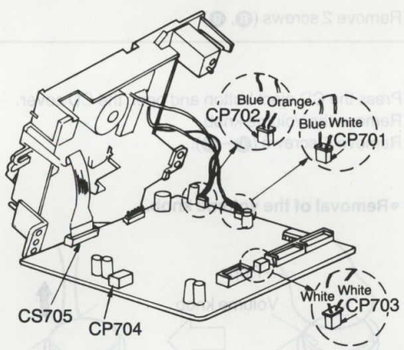

2. Remove 5 connectors (CP701, CP702, CP703, CP704, CS705).

Ref. No. 8 — Removal of the P.C.B. Unit

Procedure 1→2→4→8

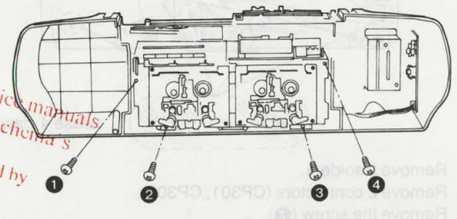

1. Remove 4 screws (❶~❹).

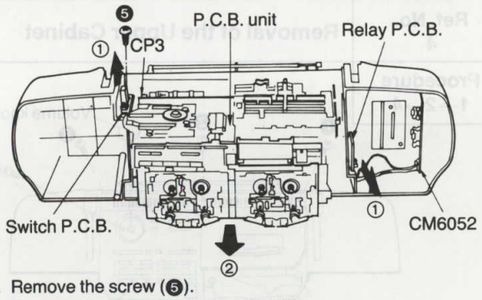

2. Remove the screw (❺).
3. Remove 2 connectors (CP3, CM6052).
4. Remove the switch P.C.B. and relay P.C.B. in the direction of arrows ①.
5. Remove the P.C.B. unit in the direction of arrow ②.

Ref. No. 9 — Removal of the Headphones Jack P.C.B.

Procedure 1→2→4→8→9

1. Remove the connector (CM604).
2. Release 2 claws.
3. Release 2 hooks.

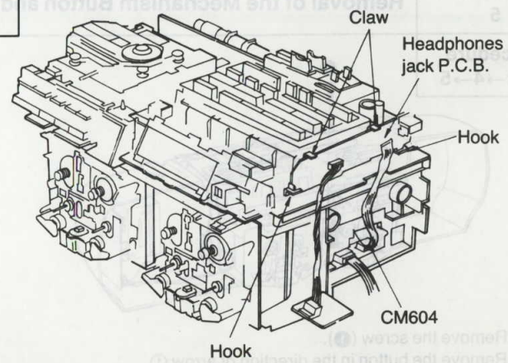

Ref. No. 10 — Removal of the Relay P.C.B.

Procedure 1→2→4→8→10

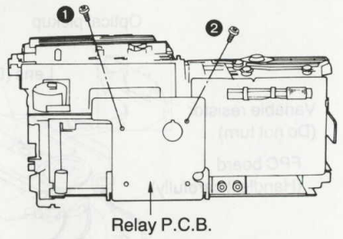

1. Remove 2 screws (❶, ❷).
2. Pull out the relay P.C.B.

Ref. No. 11 — Removal of the Tuner P.C.B.

Procedure 1→2→4→8→10→11

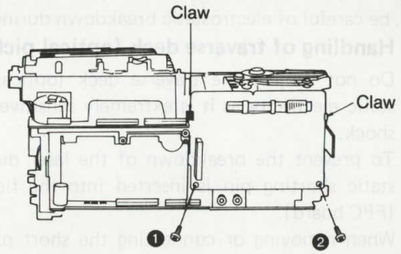

1. Remove 2 screws (❶, ❷).
2. Release 2 claws.

Ref. No. 12 — Removal of the System Control P.C.B. and Operation P.C.B.

Procedure 1→2→4→8→9→10→12

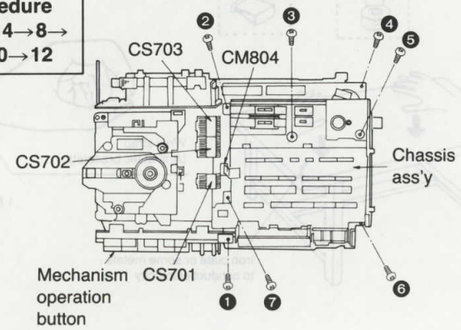

1. Remove the screw (❶).
2. Remove the mechanism operation button.
3. Remove 6 screws (❷~❼).
4. Remove 4 connectors (CS701, CS702, CS703, CM804).
5. Remove the chassis ass'y.

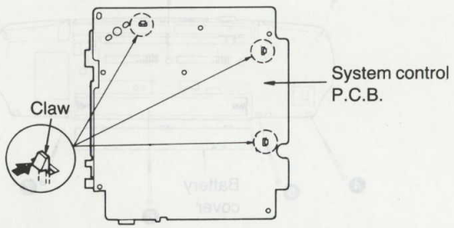

6. Release 3 claws in the direction of arrow and then remove the system control P.C.B.

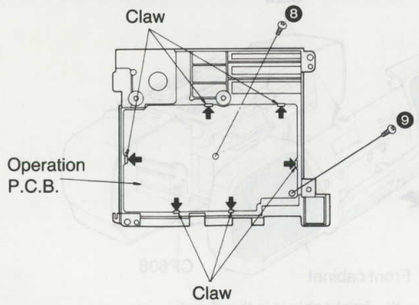

7. Remove 2 screws (❽, ❾).
8. Release 6 claws in the direction of arrows.

Ref. No. 13 — Removal of the Volume Chassis

Procedure 1→2→4→8→9→10→12→13

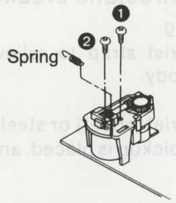

1. Remove the spring.
2. Remove 2 screws (❶, ❷).

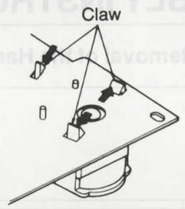

3. Release 3 claws in the direction of arrows ①.

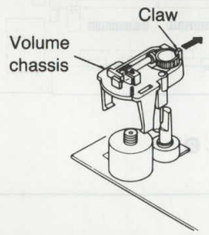

4. Remove the volume chassis.
5. Release the claw in the direction of arrow ②.

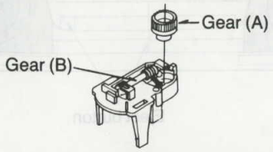

6. Pull out the gear (A).
7. Remove the gear (B) in the direction of arrow ③.

Ref. No. 14 — Removal of the Operation Button

Procedure 1→2→4→8→9 10→12→14

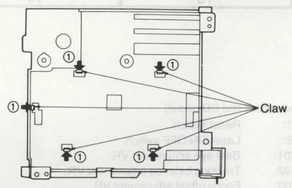

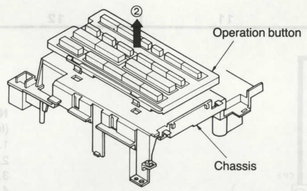

1. Release 5 claws in the direction of arrows ①.
2. Remove the operation button in the direction of arrow ②.

Ref. No. 15 — Removal of the LCD

Procedure 1→2→4→8→9 10→12→15

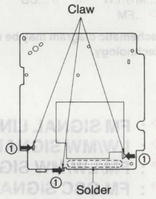

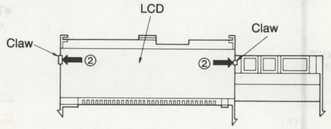

1. Remove the solder.
2. Release 3 claws in the direction of arrows ①.
3. Release 2 claws in the direction of arrows ②.

Ref. No. 16 — Removal of the Slide Knob

Procedure 1→2→4→8→9 10→12→16

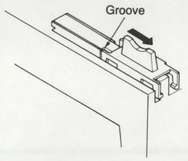

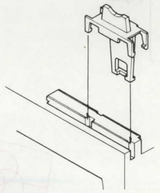

1. Slide the knob in the direction of arrow.
2. Remove the slide knob.

Ref. No. 17 — Removal of the Switch Knob

Procedure 1→2→4→8→9 10→12→17

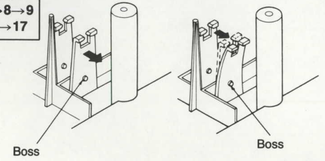

●Release the boss.

Ref. No. 18 — Removal of the CD Cover

Procedure 1→2→5→7

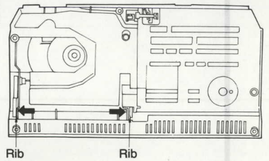

●Release 2 ribs.

Ref. No. 19 — Removal of the Disc Holder

Procedure 1→2→4→19

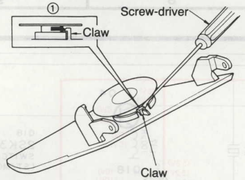

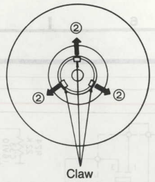

1. Release the claw in the direction of arrow ①.
2. Release 3 claws in the direction of arrows ②.

Ref. No. 20 — Removal of the CD EJECT Lever

Procedure 1→2→4→20

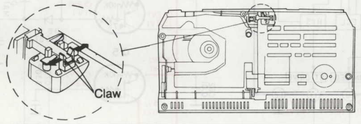

●Release 2 claws in the direction of arrows.

Ref. No. 21 — Removal of the CD EJECT Button

Procedure 1→2→4→ 20→21

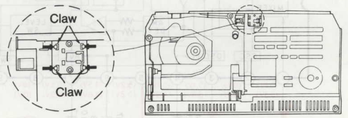

●Release 4 claws in the direction of arrows.

Ref. No. 22 — Removal of the AF P.C.B.

Procedure 1→2→8→22

1. Remove the screw (❶).
2. Remove 2 connectors (CM604, CM6051).
3. Release 2 claws in the direction of arrow ①.
4. Remove the AF P.C.B. in the direction of arrow ②.

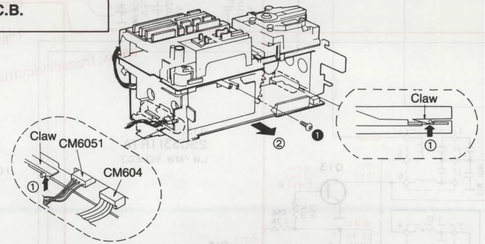

Ref. No. 23 — Removal of the Power P.C.B.

Procedure 1→2→23

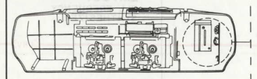

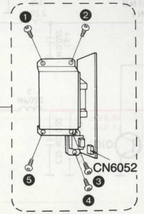

1. Remove the connector (CN6052).
2. Remove 5 screws (❶~❺).

Ref. No. 24 — Removal of the Battery P.C.B.

Procedure 1→2→4→8→24

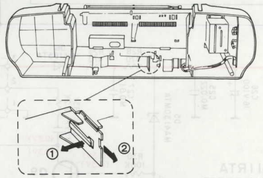

●Release the claw in the direction of arrow ① and then remove the battery P.C.B. in the direction of arrow ②.

Ref. No. 25 — Removal of the Battery P.C.B. and Battery Terminal

Procedure 1→2→8→25

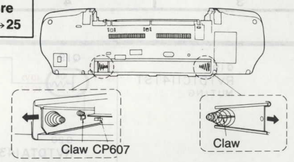

1. Remove the connector (CP607).
2. Release the claw and then remove the battery terminal and battery P.C.B. in the direction of arrow.

Ref. No. 26 — Removal of the Speaker

Procedure 1→2→26

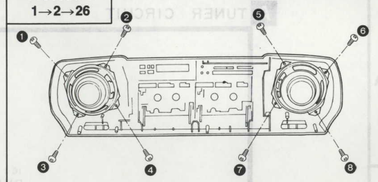

●Remove 8 screws (❶~❽).

Ref. No. 27 — Removal of the Cassette Holder

Procedure 1→2→27

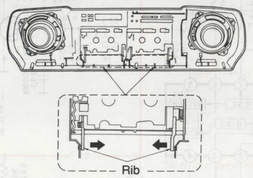

●Release 2 ribs in the direction of arrows.

Ref. No. 28 — Removal of the Eject Lever

Procedure 1→2→28

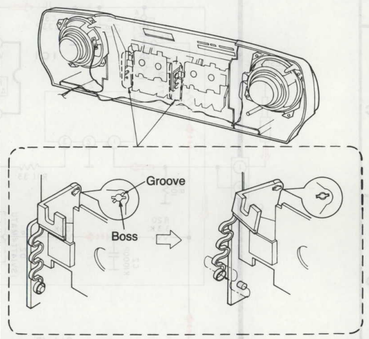

●Release the boss.

Ref. No. 29 — Removal of the Eject Button

Procedure 1→2→28→29

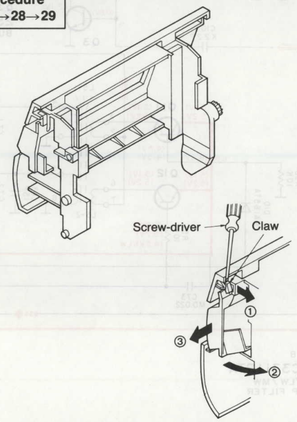

1. Release the claw in the direction of arrow ①.
2. Remove the eject button in the direction of arrow ②, ③.

Ref. No. 30 — Removal of the Panasonic Badge

Procedure 1→2→30

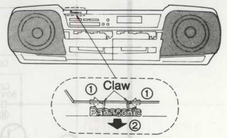

1. Release 2 claws in the direction of arrows ①.
2. Remove the badge in the direction of arrow ②.

SCHEMATIC DIAGRAM ●TUNER CIRCUIT (Parts list on pages 66~72)

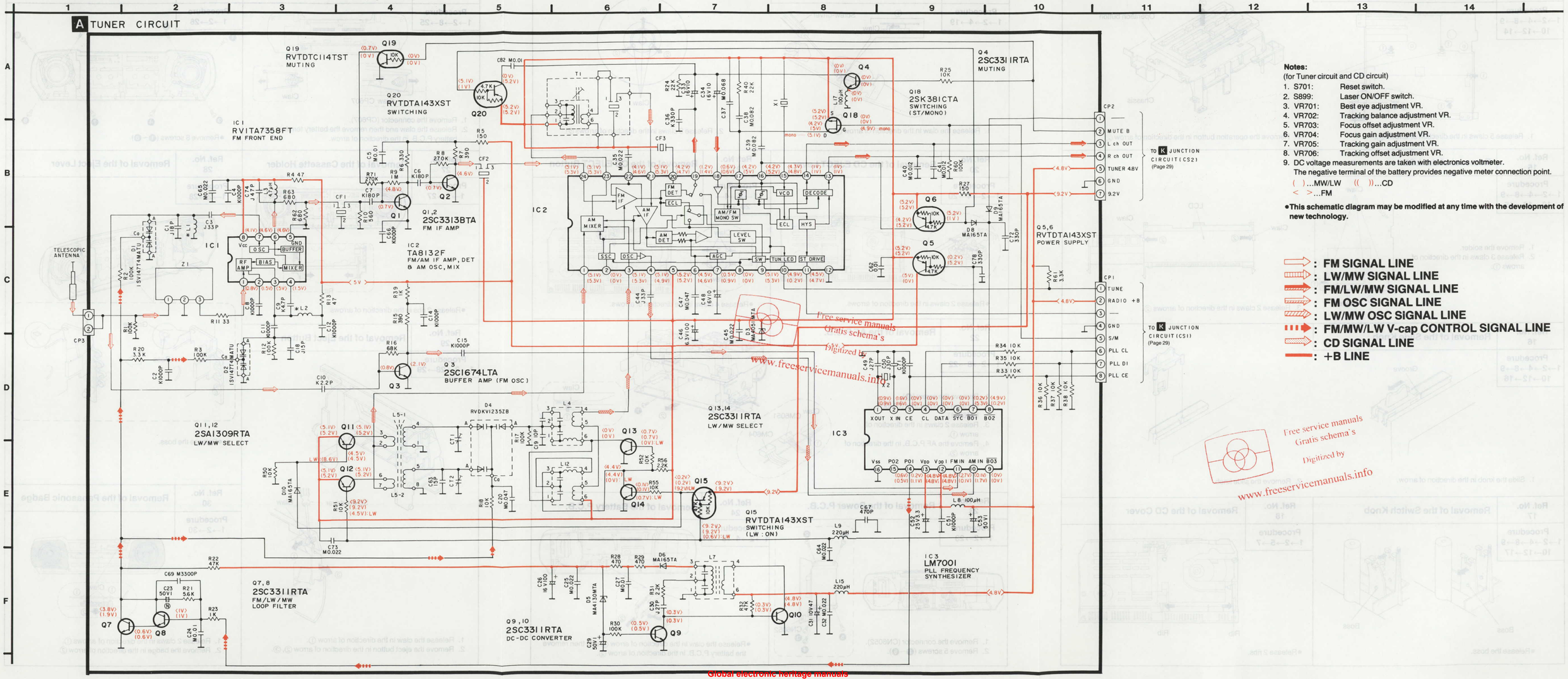

Notes:
(for Tuner circuit and CD circuit)

1. S701: Reset switch.
2. S899: Laser ON/OFF switch.
3. VR701: Best eye adjustment VR.
4. VR702: Tracking balance adjustment VR.
5. VR703: Focus offset adjustment VR.
6. VR704: Focus gain adjustment VR.
7. VR705: Tracking gain adjustment VR.
8. VR706: Tracking offset adjustment VR.
9. DC voltage measurements are taken with electronics voltmeter. The negative terminal of the battery provides negative meter connection point.
   ( )...MW/LW (( ))...CD
   < >...FM

●This schematic diagram may be modified at any time with the development of new technology.

: FM SIGNAL LINE
: LW/MW SIGNAL LINE
: FM/LW/MW SIGNAL LINE
: FM OSC SIGNAL LINE
: LW/MW OSC SIGNAL LINE
: FM/MW/LW V-cap CONTROL SIGNAL LINE
: CD SIGNAL LINE
: +B LINE

SCHEMATIC DIAGRAM •CD CIRCUIT (Parts list on pages 66~72)

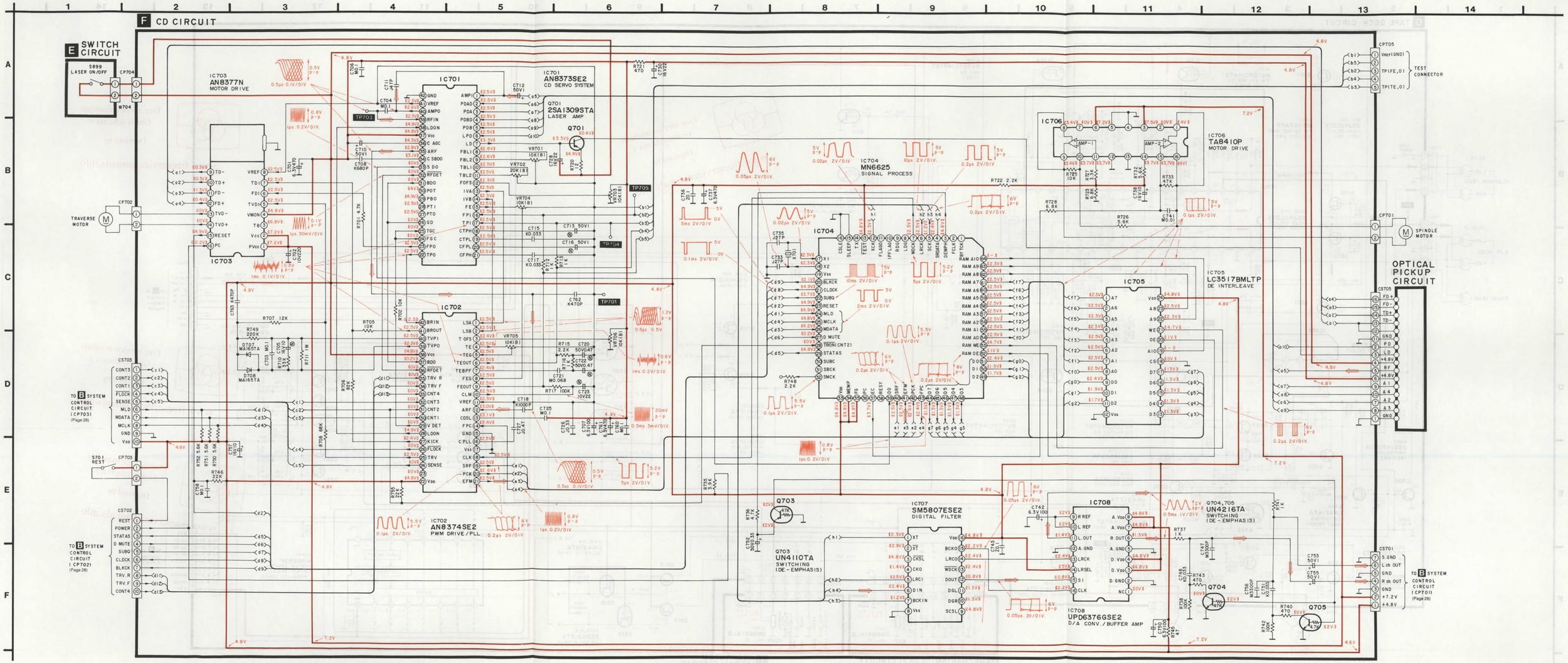

SCHEMATIC DIAGRAM •TAPE DECK CIRCUIT (Parts list on pages 66~72)

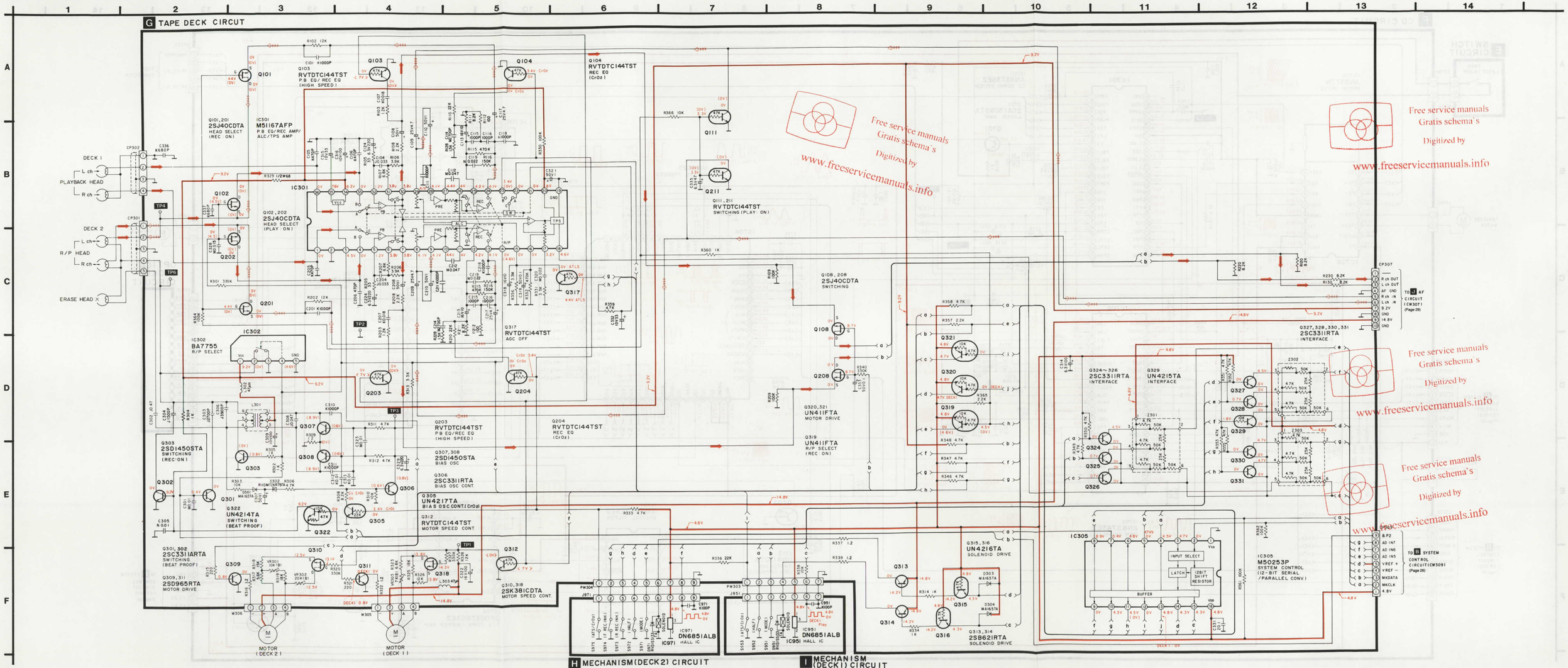

Notes:

for Tape deck circuit

- ●S951: Deck 1 mode detect switch.
- ●S952: Deck 1 cassette tape insertion detect switch.
- ●S953: Deck 1 C/O₂ tape detect switch.
- ●S971: Deck 2 mode detect switch.
- ●S972: Deck 2 cassette tape insertion detect switch.
- ●S973: Deck 2 record prevention tab detect switch. (REV)
- ●S974: Deck 2 record prevention tab detect switch. (FWD)
- ●S975: Deck 2 C/O₂ tape detect switch.
- ●VR301: Deck 2 tape speed adjustment VR. (HIGH)
- ●VR302: Deck 2 tape speed adjustment VR. (NORMAL)
- ●VR303: Deck 1 tape speed adjustment VR.

for System control and operation (Tape deck, Tuner, CD and Timer) circuit

- ●S800: Tape stop "■" switch.
- ●S802: CD play/stop "▶/■" switch.
- ●S803: Power switch.
- ●S804: Tape reverse side playback "◀" switch.
- ●S806: CD pause "❚❚" switch.
- ●S807: Function select "TAPE" switch.
- ●S808: Display select "DISPLAY" switch.
- ●S809: Tape fast/TPS "◀◀ TPS" switch.
- ●S811: CD repeat "REPEAT" switch.
- ●S812: Function select "TUNER/BAND" switch.
- ●S813: Tape counter reset "COUNTER RESET" switch.
- ●S814: Tape deck 1 select "DECK 1" switch.
- ●S816: CD auto edit "AUTO EDIT (A/B)" switch.
- ●S817: Function select "CD" switch.
- ●S819: Tape deck select "DECK 2" switch.
- ●S821: CD skip/search "▶▶/▶▶❚" switch.
- ●S822: Function select "AUX" switch.
- ●S823: Tape front side playback "▶" switch.
- ●S825: Auto CD editing "CANCEL" switch.
- ●S826: Timer set/tuning "+" switch.
- ●S827: Tape fast/TPS "TPS ▶▶" switch.
- ●S831: Tape reverse mode select "REV MODE" switch.
- ●S833: CD skip/search "▶▶/▶▶❚" switch.
- ●S834: Sleep "SLEEP" switch.
- ●S835: Tape recording pause (REC PAUSE) switch.
- ●S837: Tape length "TAPE LENGTH" switch.
- ●S838: Timer "TIMER" switch.
- ●S839: CD cover open/close detect switch.
- ●S840: Tape one touch edit "NORMAL" switch.
- ●S843: Time set/tuning "−" switch.
- ●S844: Tape one touch edit "HIGH" switch.
- ●S846: Auto CD editing "ATLS" switch.
- ●S847: Timer check "TIMER CHECK" switch.
- ●S849: Auto CD editing "FIT" switch.
- ●S850: Time adjust "TIME ADJUST" switch.
- ●S851: FM mode/Beat proof "FM MODE/B.P" switch in "MONO/T" position.
  (M/I...MONO/I, S/II...STEREO/II, S/III...STEREO/III)
- ●S899: Laser power off switch.
- ●VR470: Tone control VR. (Lch)
- ●VR472: XBS level control VR. (Lch)
- ●VR473: Volume control VR. (Lch)
- ●VR570: Tone control VR. (Rch)
- ●VR572: XBS level control VR. (Rch)
- ●VR573: Volume control VR. (Rch)

General

- ●DC voltage measurements are taken with electronics voltmeter.
  The negative terminal of the battery provides negative meter connection point.

No mark...TAPE PLAYBACK (DECK 2) [ ]...TAPE RECORDING << >>...HIGH SPEED EDITING
(( ))...CD 「 」...TUNER [[ ]]...AUX

- ●This schematic diagram may be modified at any time with the development of new technology.

: MAIN SIGNAL LINE : TAPE PLAYBACK SIGNAL LINE
: TAPE RECORDING SIGNAL LINE : +B LINE

SCHEMATIC DIAGRAM ●SYSTEM CONTROL CIRCUIT (Parts list on pages 66~72)

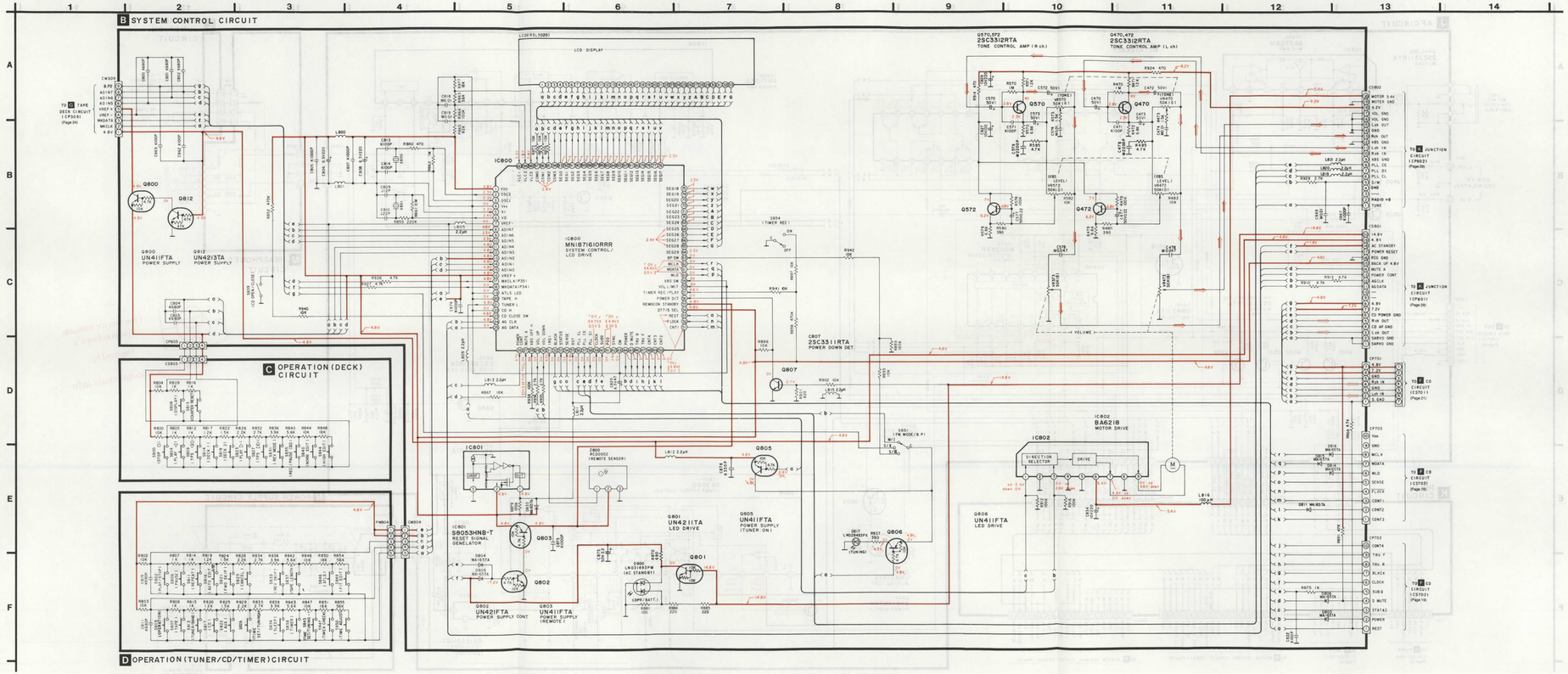

SCHEMATIC DIAGRAM ●AF CIRCUIT (Parts list on pages 66~72)

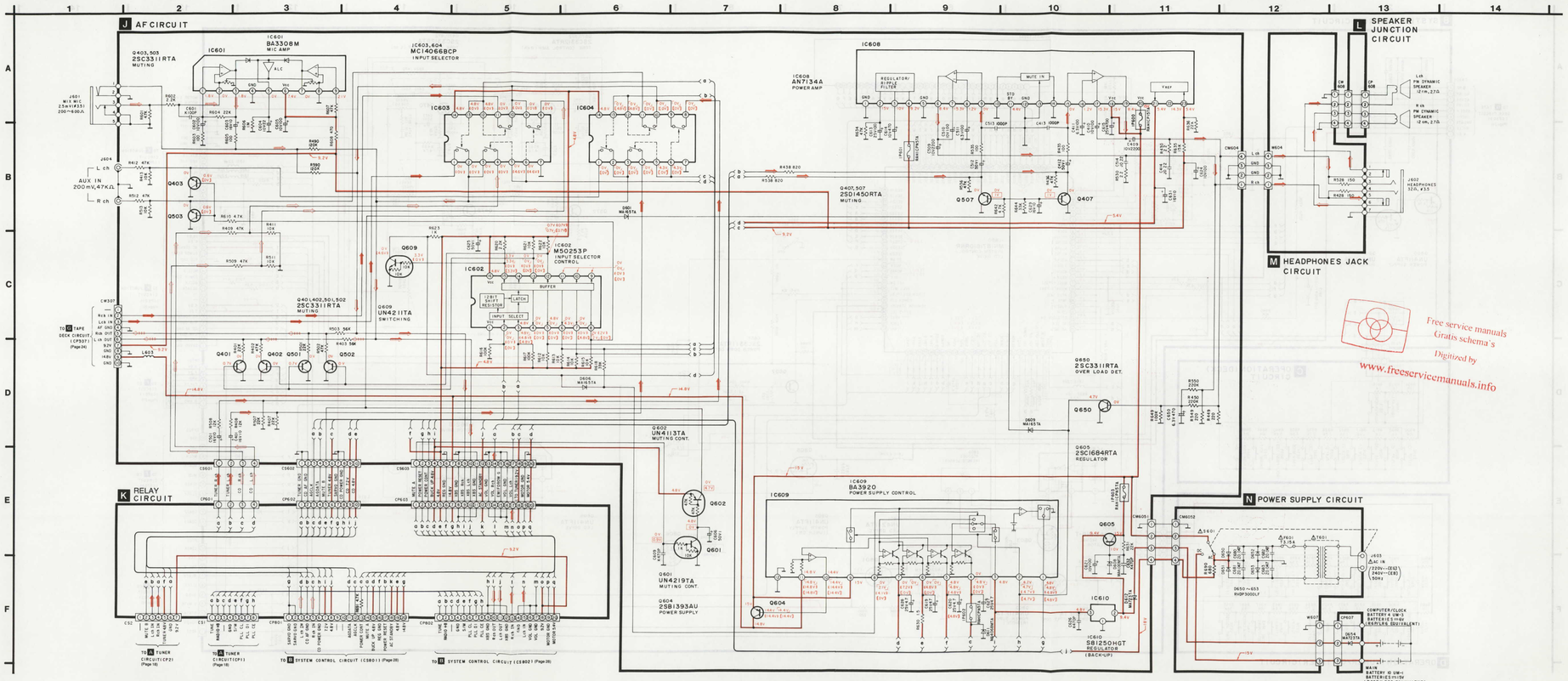

Notes:

- ●S600: AC/DC select switch in "AC" position.
- ●DC voltage measurements are taken with electronics voltmeter. The negative terminal of the battery provides negative meter connection point.

No mark...TAPE PLAYBACK (DECK 2) ...MUTING ...TUNER
(( ))...CD]]...AUX

- ●**Battery current:**

Vol. min. .....195 mA (MW/LW)
190 mA (FM)
270 mA (TAPE PLAYBACK)

	XBS min.	XBS max.	
Vol. max.	840 mA	1050 mA	(MW)
	790 mA	950 mA	(LW)
	1400 mA	1510 mA	(FM)
	1380 mA	1560 mA	(TAPE PLAYBACK)
	1550 mA	1760 mA	(TAPE EDIT)
	1780 mA	1790 mA	(CD)

Measurement instruction
MW/LW: 74 dBm, 30% Mod. TAPE: 315 Hz, 0 dB
FM: 60 dB, 30% Mod. CD: 1 kHz, 0 dB

- ●Important safety notice.
Components identified by ⚠ mark have special characteristics important for safety.
When replacing any of these components, use only manufacturer's specified parts.

- ●**This schematic diagram may be modified at any time with the development of new technology.**

**: FM/LW/MW SIGNAL LINE **: TAPE PLAYBACK SIGNAL LINE **: MIC SIGNAL LINE
**: RECORD SIGNAL LINE **: MAIN SIGNAL LINE **: CD SIGNAL LINE **: +B LINE

DESCRIPTION OF FL PANEL

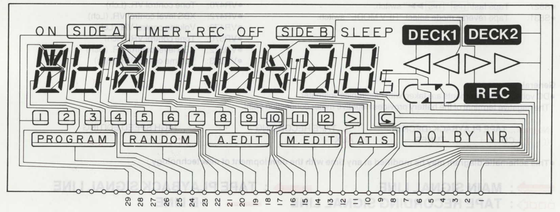

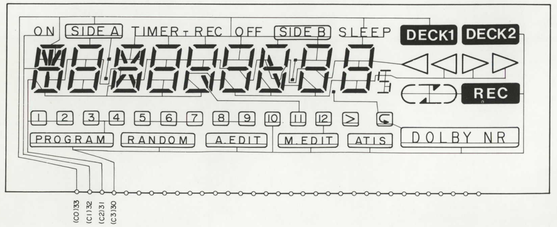

CIRCUIT BOARD DIAGRAM

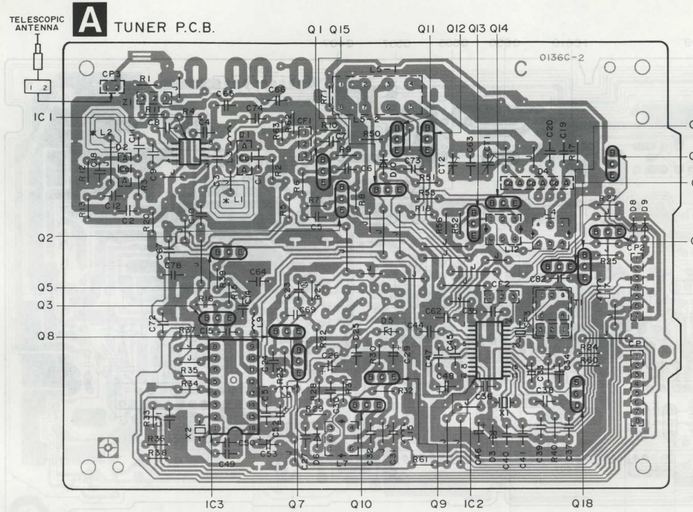

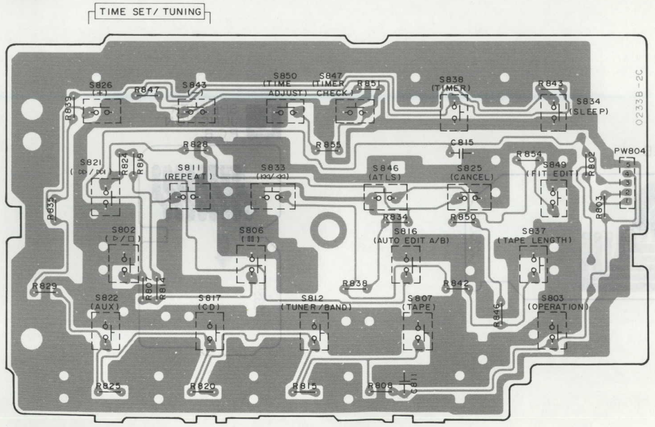

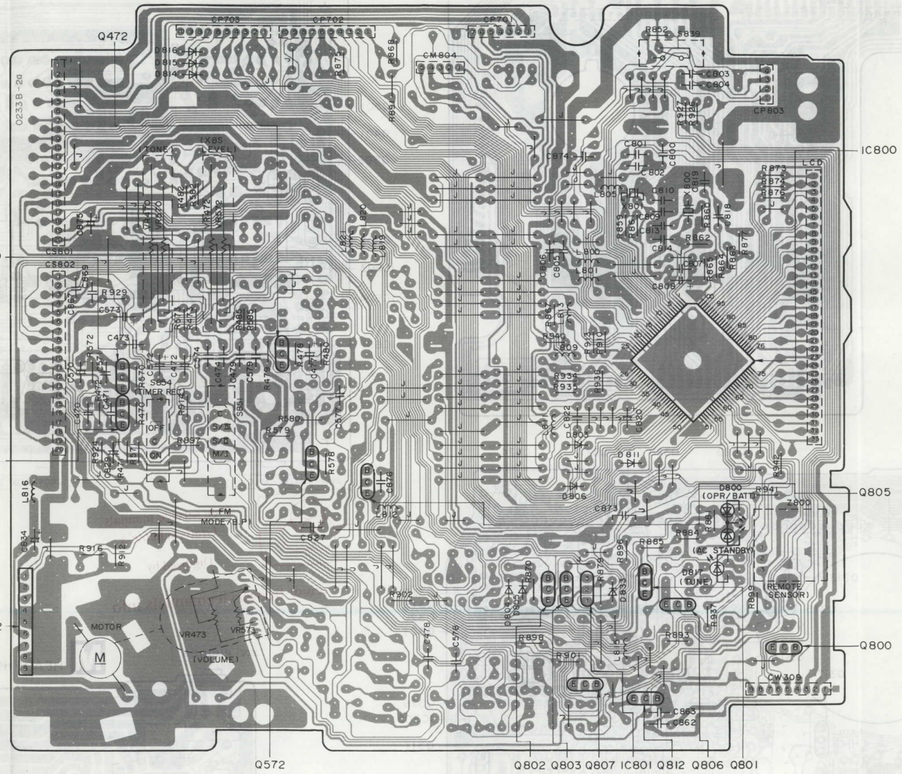

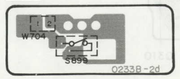

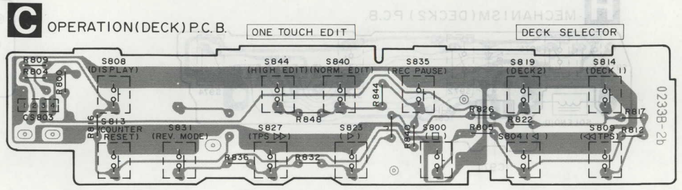

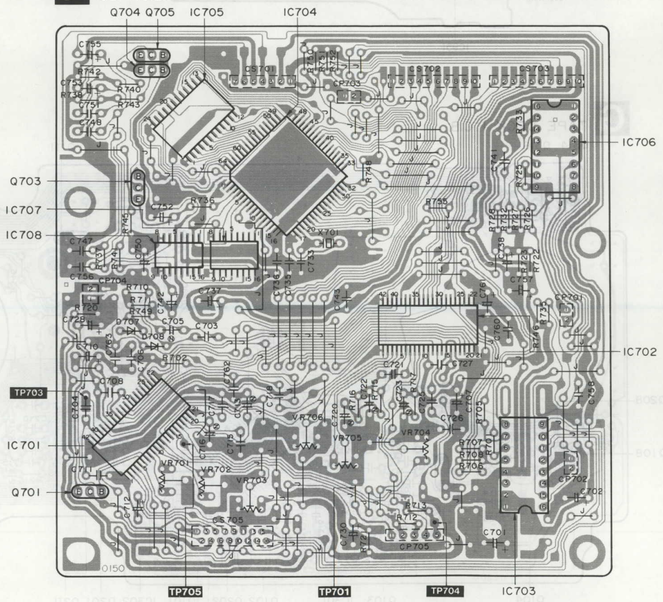

CIRCUIT BOARD DIAGRAM

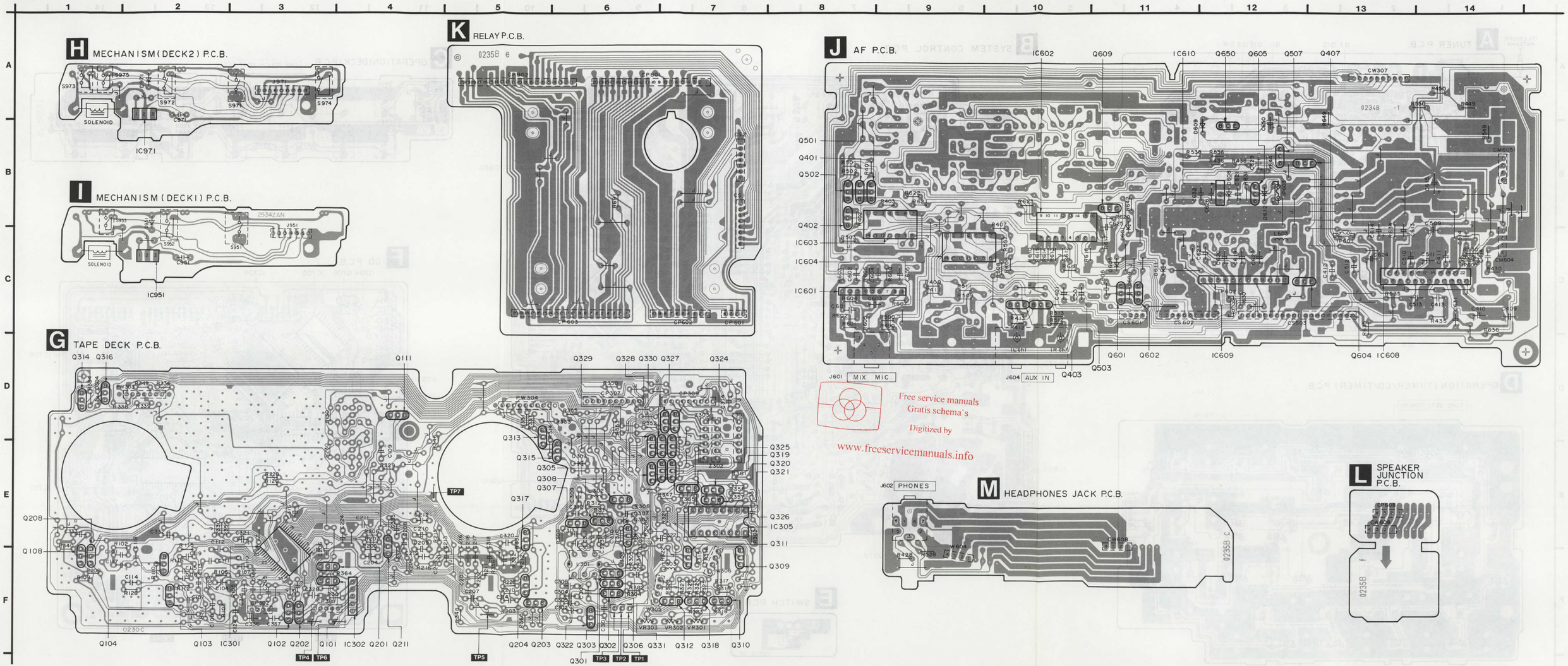

CIRCUIT BOARD DIAGRAM

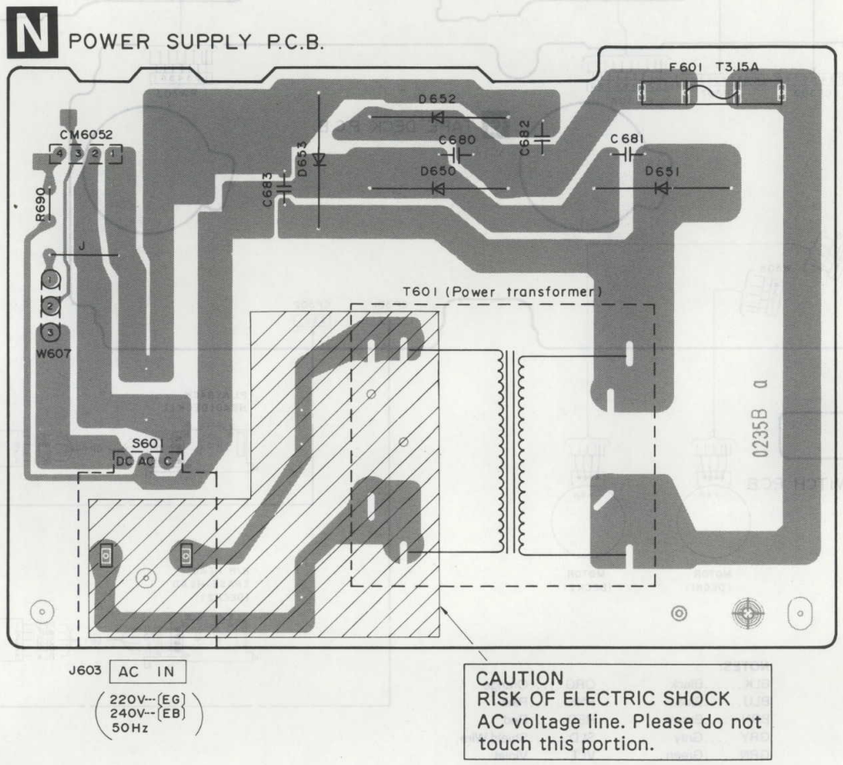

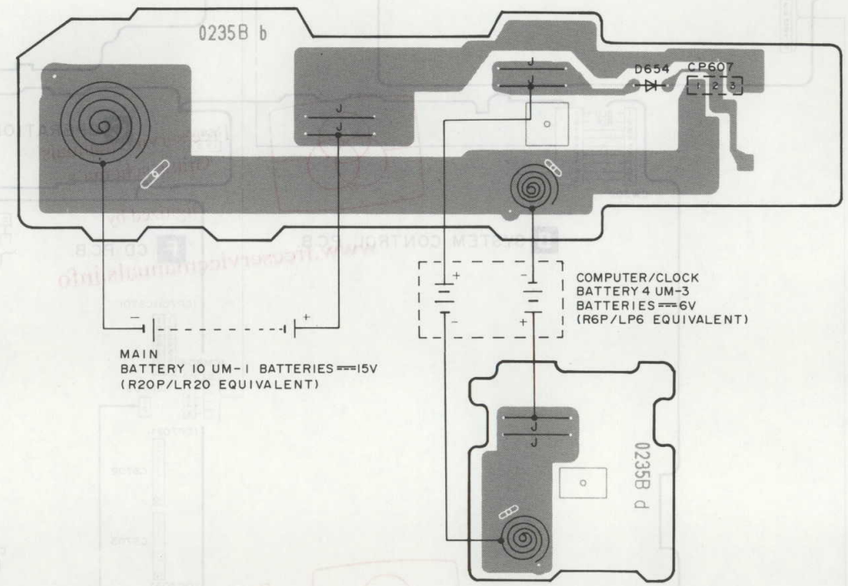

AN8373SE2 AN8374SE2	LC3517BMLTP TA8132F	M51167AFP	SM5807ESE2 UPD6376GSE2	RVITA7358FT	LM7001 TA8410P	M50253P	MC14066BCP	MN1871610RRR	BA3308M BA6218	S8053HNB-T S81250HGT	AN7134A
BA3920	MN6625	AN8377N	BA7755	DN6851ALB		2SA1309RTA 2SA1309STA 2SC3311RTA 2SC3311ARTA 2SC3312RTA 2SC3313BTA 2SD1450RTA 2SD1450STA UN411FTA	UN421FTA UN4110TA UN4113TA UN4211TA UN4213TA UN4214TA UN4215TA UN4216TA UN4217TA UN4219TA	2SB621RTA 2SC1674LTA 2SD965RTA 2SC1684RTA	2SB1393AU	RVTDTA143XST RVTDTC144TST	2SK381CTA 2SK381CDTA 2SJ40CDTA
MA165TA MA723TA	MA4100MTA MA4130MTA	MA4051MTA MA4068MTA	RVDP300DLF	RVDMTZ4R7BTA	1SV147T4MATU	RVDKV1235ZB					

WIRING CONNECTION DIAGRAM

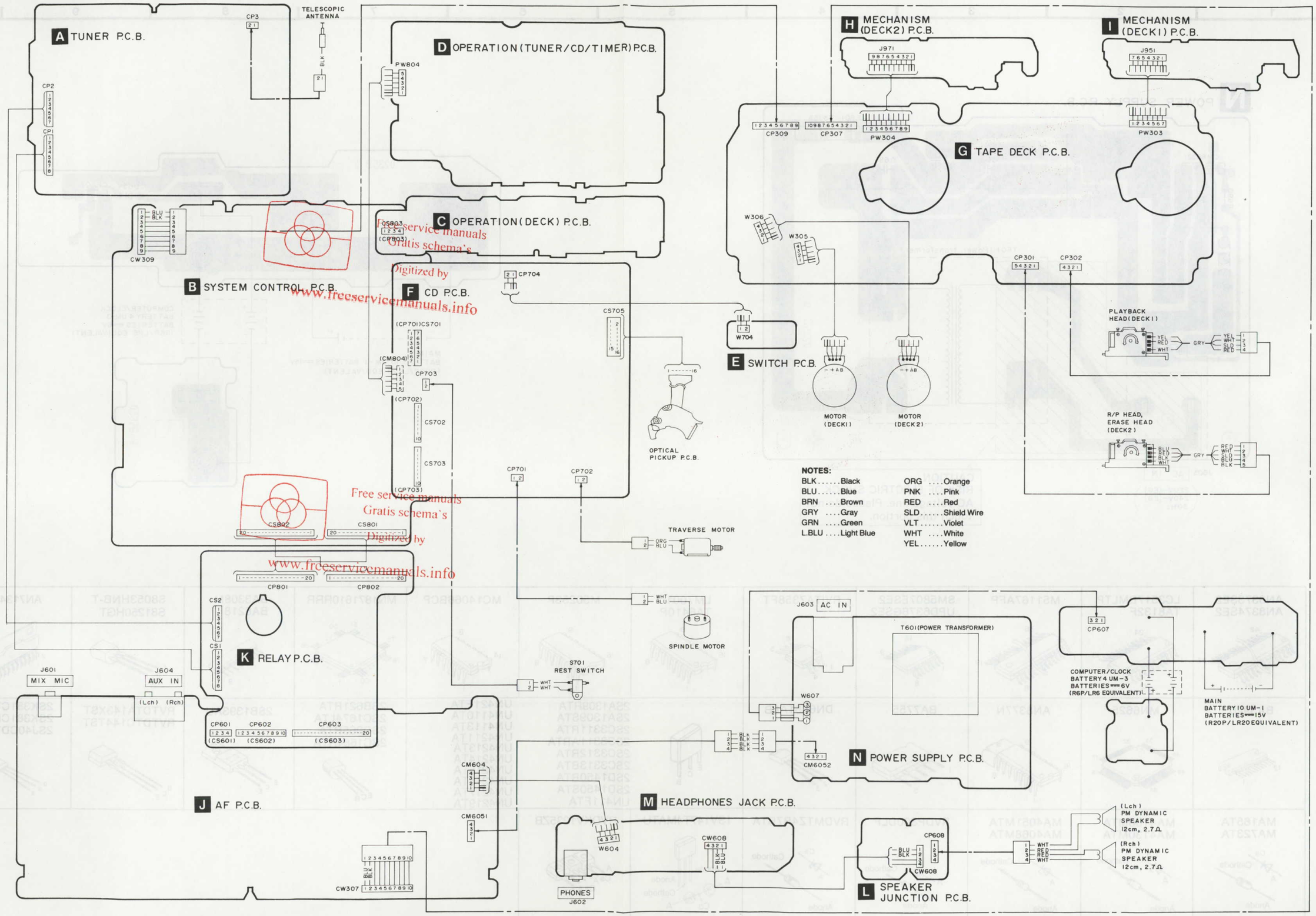

RX-DT5 RX-DT5

BLOCK DIAGRAM •for CD

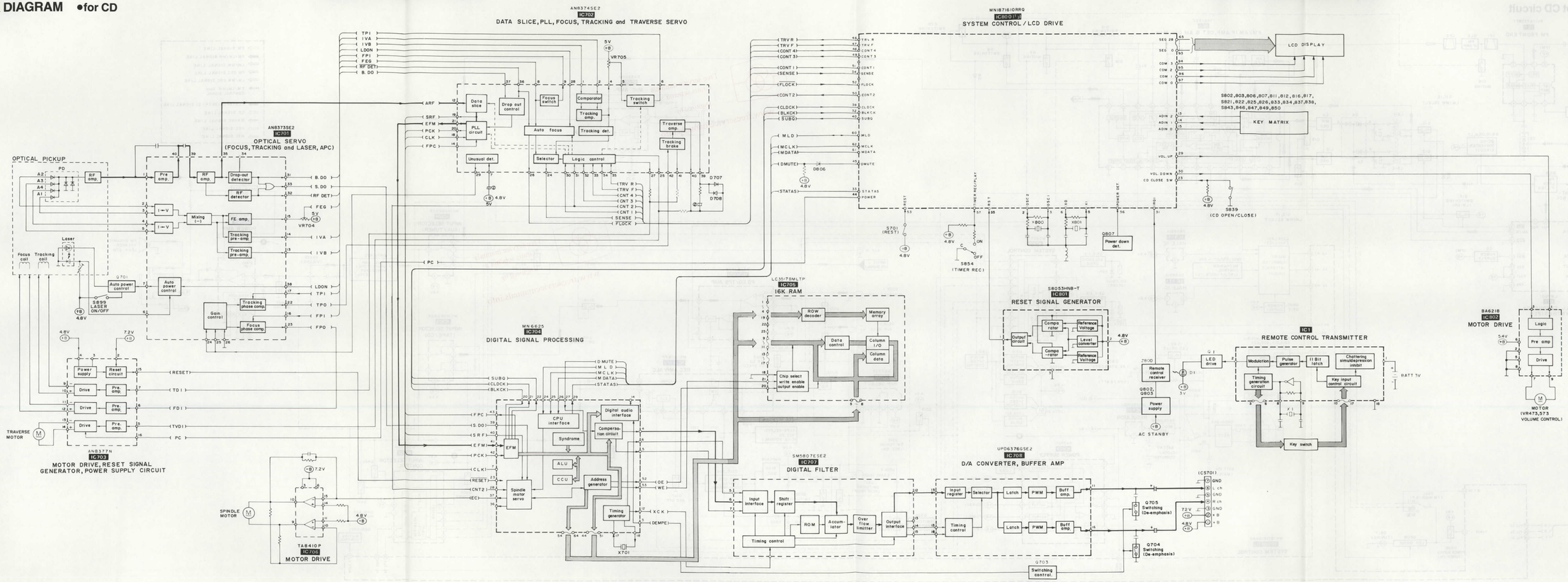

RX-DT5 RX-DT5

BLOCK DIAGRAM ●except CD circuit

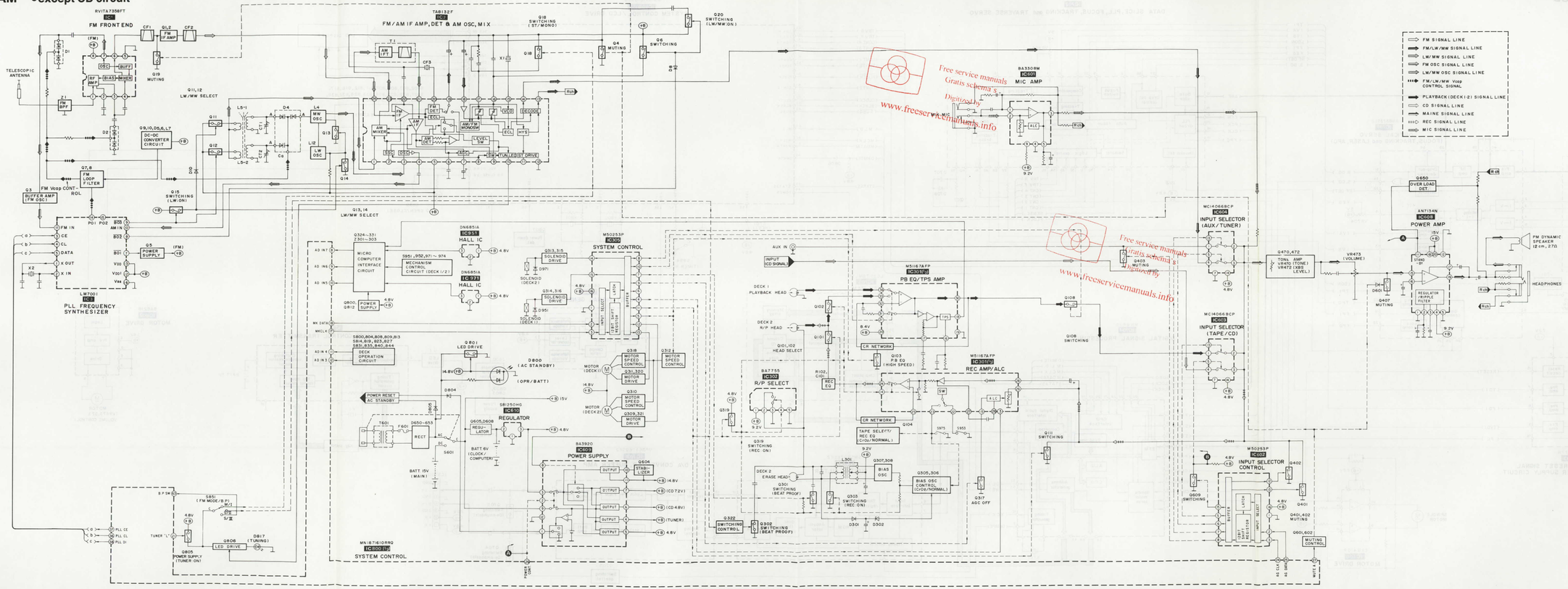

USING THE EXTENSION CABLE WHEN CHECKING THE P.C.B.S

■ An extension cable is needed to check the operation P.C.B., tuner P.C.B. and CD section in MEASUREMENTS AND ADJUSTMENTS. (See adjustment procedures for the CD section.)

Extension cable parts number: **RFKZXDT7** (consisting of one set of 5 cables).

Components:

- to connect the CD P.C.B. and operation P.C.B.:
  10-pin, 2 cables
  7-pin, 1 cable
- to connect the operation P.C.B. and the relay P.C.B.:
  20-pin, 2 cables

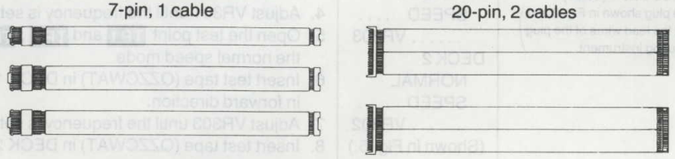

■ How to Connect the Wires to Check the Operation P.C.B.

1. Remove the P.C.B. unit by following the disassembly instructions in Ref. No. 8 in the REMOVAL OF THE P.C.B. UNIT. (See p. 11.)

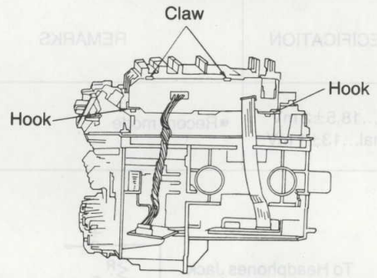

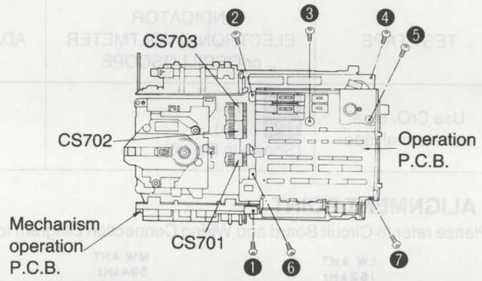

2. Remove two claws and two hooks and then the headphones jack P.C.B.
   - Do not disconnect connector CM604. (for headphones jack output.)
3. Remove three connectors (CS701, CS702 and CS703).
4. Remove seven screws (❶~❼).
5. Remove the operation P.C.B. together with the mechanism operation P.C.B.

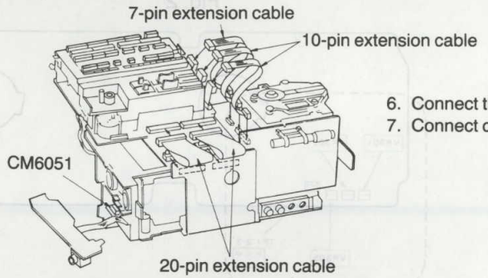

6. Connect the extension cables as shown in the figure on the left.
7. Connect connector CM6051 to CM6052 on the power supply P.C.B. (for power supply).

■ How to Connect the Wires to Check the Tuner P.C.B.

1. Remove the P.C.B. UNIT by following the disassembly instructions in Ref. No. 8 in the REMOVAL OF THE P.C.B. UNIT. (See p. 11.)
2. Remove the relay P.C.B. by following the disassembly instructions in Ref. No. 10 in REMOVAL OF THE RELAY P.C.B. (See p. 12.)
3. Remove the tuner P.C.B. by following the disassembly instructions in Ref. No. 11 in REMOVAL OF THE TUNER P.C.B. (See p. 12.)
4. Remove the AF P.C.B. by following the disassembly instructions in Ref. No. 21 in REMOVAL OF THE AF P.C.B. (See p. 14.)

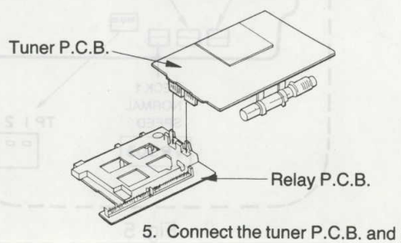

5. Connect the tuner P.C.B. and relay P.C.B.

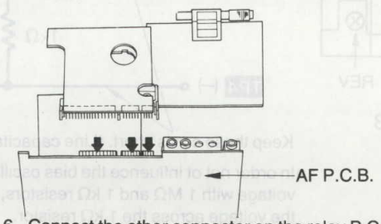

6. Connect the other connector on the relay P.C.B. to the AF P.C.B.

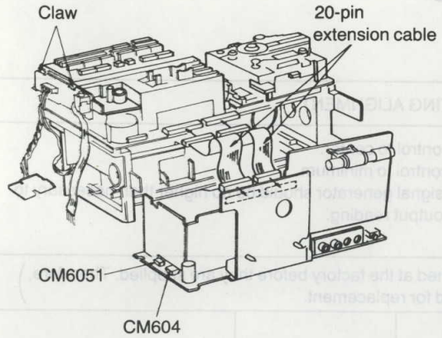

7. Use the 20-pin extension cable to connect the operation P.C.B. and the relay P.C.B.
8. Remove two claws and then the headphones jack.
9. Connect the flat cable from the headphones jack P.C.B. to CM604 (for headphones jack output).
10. Connect the connector from the power supply P.C.B. to CM6051.

■ Preparation for Checking the Tape Deck P.C.B. (The extension cables are not required.)

1. Remove the front cabinet by following the disassembly instructions in Ref. No. 2 in REMOVAL OF THE FRONT CABINET.

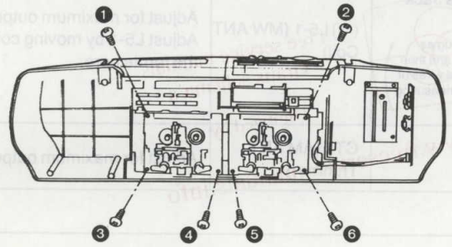

2. Remove six screws (❶~❻).

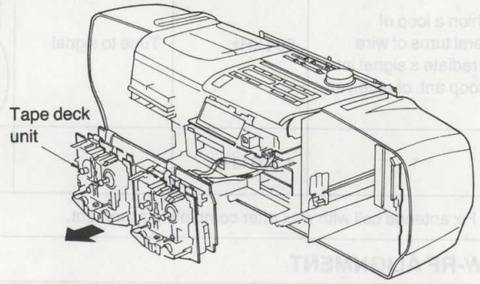

3. Remove the tape deck unit by pulling it to the front with the wires connected.

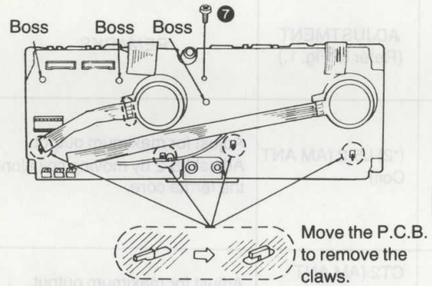

4. Remove one screw (❼).
5. Remove three bosses.
6. Remove the claws by moving the P.C.B.

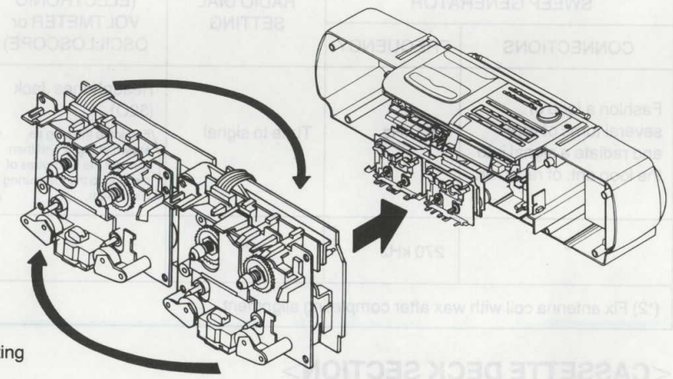

7. Turn the tape deck unit upside down.

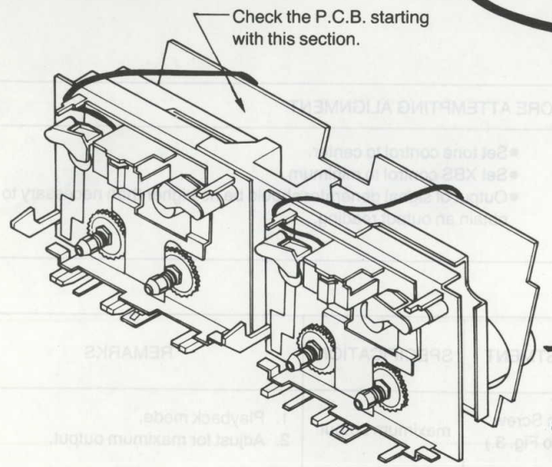

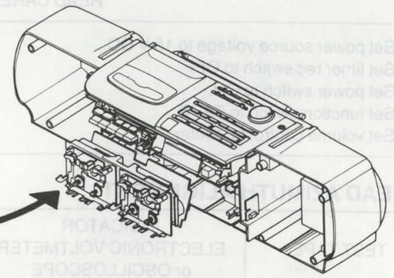

8. Detach the mechanism and tape deck P.C.B. as shown in the figure on the left.

MEASUREMENTS AND ADJUSTMENTS

<TUNER SECTION>

■ ALIGNMENT INSTRUCTION

READ CAREFULLY BEFORE ATTEMPTING ALIGNMENT

- Set power source voltage to 15 V DC.
- Set timer rec switch to OFF.
- Set power switch to ON.
- Set function switch to TUNER/MW or LW.
- Set volume control to center.
- Set tone control to center.
- Set XBS control to minimum.
- Output of signal generator should be no higher than necessary to obtain an output reading.

■ MW-RF ALIGNMENT

(The parts other than the ones listed below are aligned at the factory before they are supplied. Therefore, alignment of those parts is unnecessary when used for replacement.)

SIGNAL GENERATOR or SWEEP GENERATOR		RADIO DIAL SETTING	INDICATOR (ELECTRONIC VOLTMETER or OSCILLOSCOPE)	ADJUSTMENT (Shown in Fig. 1.)	REMARKS
CONNECTIONS	FREQUENCY				
Fashion a loop of several turns of wire and radiate a signal into the loop ant. of receiver.	594 kHz	Tune to signal	Headphones Jack (32Ω) (Fabricate the plug as shown in Fig. 2 and then connect the lead wires of the plug to the measuring instrument.)	(*1) L5-1 (MW ANT Coil)	Adjust for maximum output. Adjust L5-1 by moving coil along the ferrite core.
"	1,503 kHz	"	"	CT1 (AM ANT Trimmer)	Adjust for maximum output.

(*1) Fix antenna coil with wax after completing alignment.

■ LW-RF ALIGNMENT

SIGNAL GENERATOR or SWEEP GENERATOR		RADIO DIAL SETTING	INDICATOR (ELECTRONIC VOLTMETER or OSCILLOSCOPE)	ADJUSTMENT (Refer to Fig. 1.)	REMARKS
CONNECTIONS	FREQUENCY				
Fashion a loop of several turns of wire and radiate a signal into the loop ant. of receiver.	162 kHz	Tune to signal	Headphones Jack (32Ω) (Fabricate the plug as shown in Fig. 2 and then connect the lead wires of the plug to the measuring instrument.)	(*2) L5-2 (AM ANT Coil)	Adjust for maximum output. Adjust L5-2 by moving coil along the ferrite core.
"	270 kHz	"	"	CT2 (AM ANT Trimmer)	Adjust for maximum output.

(*2) Fix antenna coil with wax after completing alignment.

<CASSETTE DECK SECTION>

■ ALIGNMENT INSTRUCTION

READ CAREFULLY BEFORE ATTEMPTING ALIGNMENT

- Set power source voltage to 15 V DC.
- Set timer rec switch to OFF.
- Set power switch to ON.
- Set function switch to TAPE.
- Set volume control to center.
- Set tone control to center.
- Set XBS control to minimum.
- Output of signal generator should be no higher than necessary to obtain an output reading.

■ HEAD AZIMUTH ALIGNMENT

TEST TAPE	INDICATOR ELECTRONIC VOLTMETER or OSCILLOSCOPE	ADJUSTMENT	SPECIFICATION	REMARKS
QZZCFM (8 kHz, −20 dB)	Headphones Jack (32Ω) (Fabricate the plug shown in Fig. 2 and then connect the lead wires of the plug to the measuring instrument.)	Azimuth Screw (Refer to Fig. 3.)	maximum output.	1. Playback mode. 2. Adjust for maximum output.

■ TAPE SPEED ALIGNMENT

TEST TAPE	INDICATOR ELECTRONIC VOLTMETER or OSCILLOSCOPE	ADJUSTMENT	REMARKS
QZZCWAT (3 kHz, −10 dB)	Headphones Jack (32Ω) (Fabricate the plug shown in Fig. 2 and then connect the lead wires of the plug to the meassuring instrument.)	DECK 2 HIGH SPEED ..... VR301 DECK 1 NORMAL SPEED ..... VR303 DECK 2 NORMAL SPEED ..... VR302 (Shown in Fig. 5.)	1. Short the test point TP1 and TP2, TP2 and TP3 to set the high speed mode. 2. Insert test tape (QZZCWAT) in DECK 1 and start playback in forward direction. ●This frequency is defined as **F**. 3. Insert test tape (QZZCWAT) in DECK 2 and start playback in forward direction. 4. Adjust VR301 until the frequency is set to **F±40 Hz**. 5. Open the test point TP1 and TP2, TP2 and TP3 to set the normal speed mode. 6. Insert test tape (QZZCWAT) in DECK 1 and start playback in forward direction. 7. Adjust VR303 until the frequency is set to **3000$^{+20}_{-10}$ Hz**. 8. Insert test tape (QZZCWAT) in DECK 2 and start playback in forward direction. 9. Ajust VR302 until the frequency is set to **3000$^{+20}_{-10}$ Hz**.

■ RECORD BIAS CHECK

TEST TAPE	INDICATOR ELECTRONIC VOLTMETER or OSCILLOSCOPE	ADJUSTMENT	SPECIFICATION	REMARKS
Use CrO_2 tape and Normal tape	TP6 ...(+) TP4 ...(−) (Shown in Fig. 4.)	——	CrO_2...18.5±2 mV Normal...13±1 mV	●Record mode

■ ALIGNMENT POINT

●Please refer to Circuit Board and Wiring Connection Diagram for test point locations.

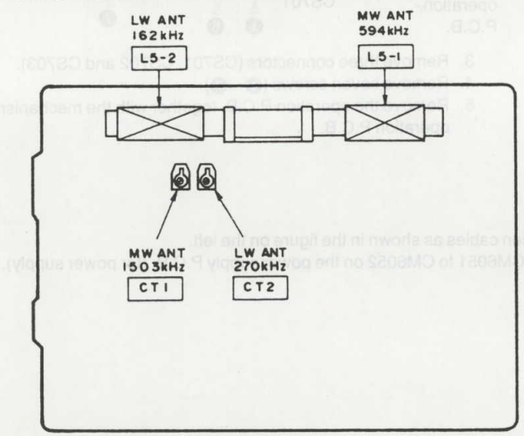

Fig. 1

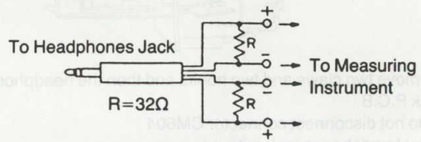

Fig. 2

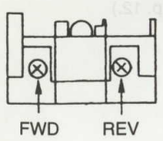

Fig. 3

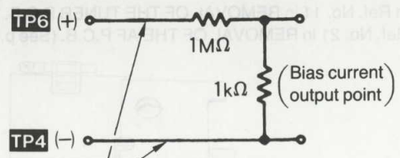

Keep these cords short. (Line capacitance: 3 pF of less)

●In order not ot influence the bias oscillation, divide the voltage with 1 MΩ and 1 kΩ resistors, and measure the voltage across the 1 kΩ resistor.

Fig. 4

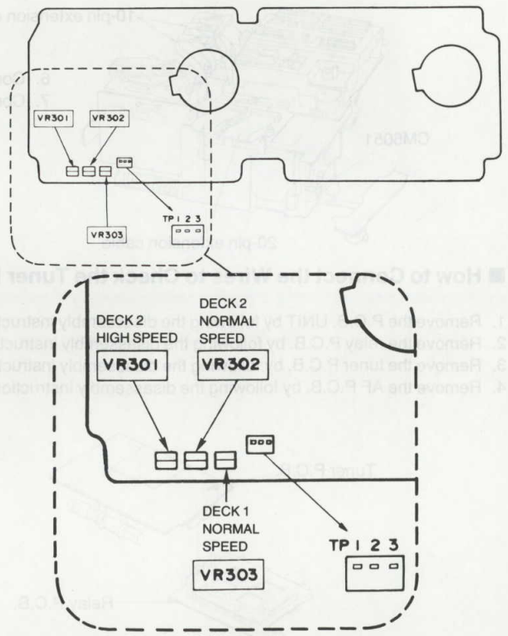

Fig. 5

<CD SECTION>

Caution:
- It is very dangerous to look at or touch the laser beam. (Laser radiation is invisible.)
  With the unit turned "on", laser radiation is emitted from the pickup lens.
  Avoid exposure to the laser beam, especially when performing adjustments.

■ PREPARATION

1. Remove the CD UNIT by following the disassembly instructions in Ref. No. 6 in REMOVAL OF THE CD UNIT.
2. Remove the disc holder by following the disassembly instructions in Ref. No. 18 in REMOVAL OF THE DISC HOLDER.

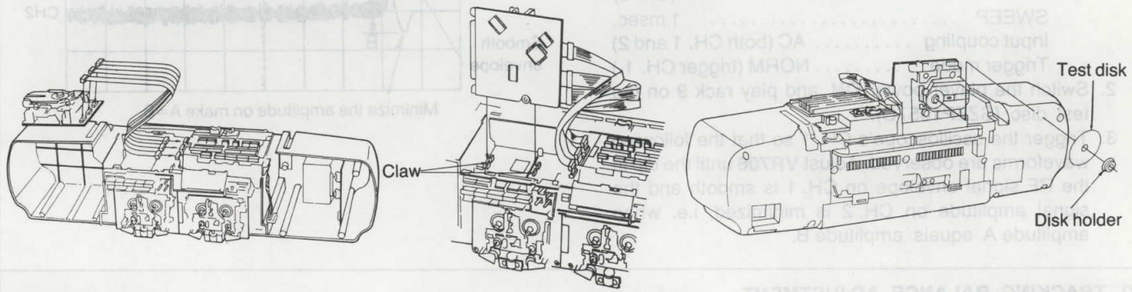

3. Connect the extension cable for the CD UNIT.
4. Temporarily engage the CD UNIT with the two claws on the chassis.
5. Bend the extension cable so that excessive pressure is not exerted to the CD P.C.B. connector.
6. Insert the test disk in the disk holder.

■ SETTING THE VR TEMPORARILY

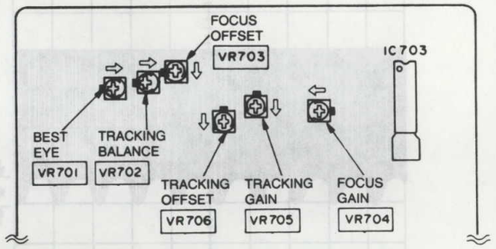

- Rotating VR704 more than necessary stops the rotation of the turntable during focus gain adjustment. In this case, set the VR to its initial position and then resume the adjustment procedure. If you cannot determine the initial position, search for the position where the VR starts rotating by turning the VR slowly clockwise or counterclockwise from the mechanical center (arrows in the left figure) and then resume the adjustment procedure.
- If the VRs are fully rotated or replaced, set them to their initial position. If you do not know their initial position, set them to their center position and then resume the adjustment procedure.

■ CONNECTING THE SERVO GAIN ADJUSTER

(Tracking focus gain and tracking balance adjustment)

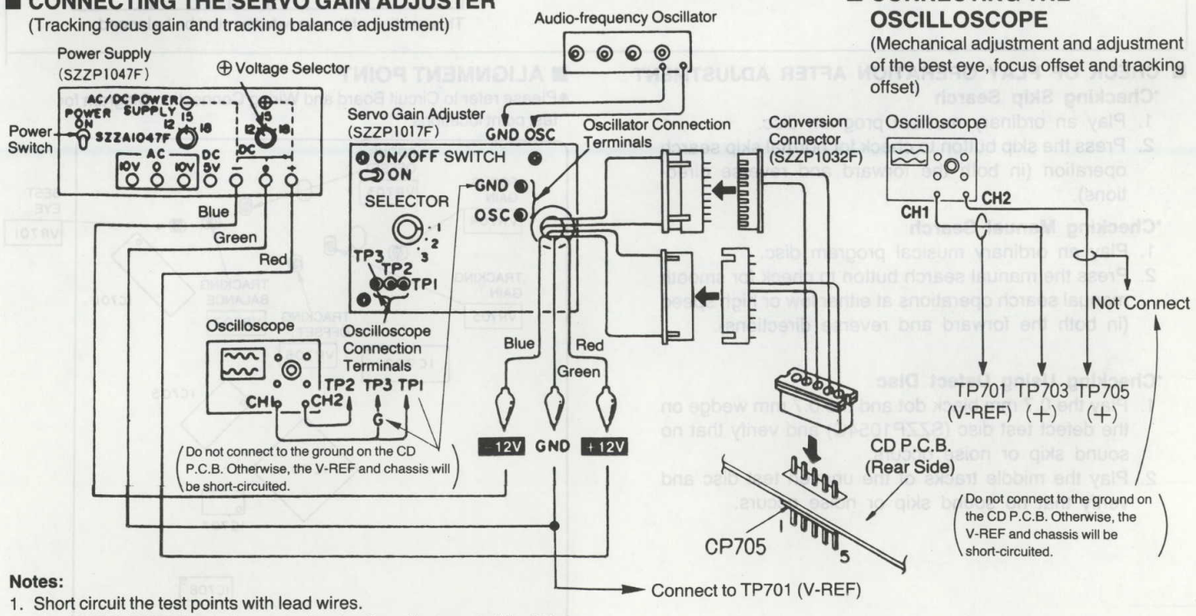

■ CONNECTING THE OSCILLOSCOPE

(Mechanical adjustment and adjustment of the best eye, focus offset and tracking offset)

Notes:
1. Short circuit the test points with lead wires.
2. Use V-REF (TP701) only for grounding for the adjustment of the CD.

Measuring Instruments and Special Tools
- Servo gain adjuster (SZZP1017F or SZZP1094C)
- Test discs
  1. Playability test disc (SZZP1054C or SZZP1014F)
  2. Uneven test disc (SZZP1056C)
  3. Black band test disc (SZZP1057C)
- Normal disc
- Dual-beam oscilloscope with bandwidth of 30 MHz or better (with EXT trigger and 1:1 probe).
- Audio frequency (AF) osillator
- Conversion connector (SZZP1032F)
- Allen wrench (M2.0)

(1) MECHANICAL ADJUSTMENT

1. Connect the oscilloscope's CH. 1 probe across **TP703** (+) and **TP701** (V-REF) on the Servo P.C.B.
   Oscilloscope setting:
   VOLT ..... 200 mV
   SWEEP ..... 0.5 µsec
   Input coupling ..... AC
2. Switch the player power **ON**, and play track **9** on the test disc (SZZP1056C).
3. Leave the player in Play mode and place it as shown in the figure on the right.
4. Alternately adjust the two mechanical adjusting screws with the 2.0 mm allen wrench until the RF signal amplitude variation on the oscilloscope is minimized.
5. After completing the adjustment, lock the **mechanical adjustments** with lock paint (RZZOL01).

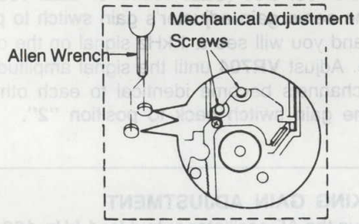

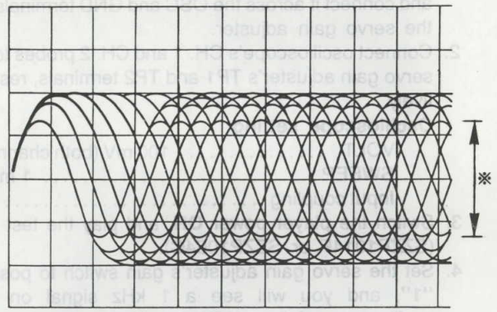

*Minimize the variation of amplitude.

(2) BEST EYE (PD BALANCE) ADJUSTMENT

1. Connect the oscilloscope's CH. 1 probe across **TP703** (+) and **TP701** (–) on the Servo P.C.B.
   Oscilloscope setting:
   VOLT ..... 100 mV
   SWEEP ..... 0.5 µsec
   Input coupling ..... AC
2. Switch the player power **ON**, and play the test disc (SZZP1014F or SZZP1054C).
3. Adjust **VR701** until the RF signal eye pattern amplitude is maximized.

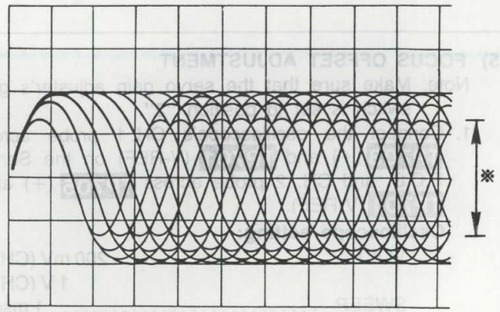

*Maximize the amplitude.

(3) FOCUS GAIN ADJUSTMENT

1. Connect the servo gain adjuster to the player (see page 55).
2. Set the servo gain adjuster's gain switch to position "3" and the ON/OFF switch to **ON**.
3. Set up the AF oscillator output for **1 kHz, 150 mVp-p**, and connect it across the OSC and GND terminals on the servo gain adjuster.
4. Connect oscilloscope's CH. 1 and CH. 2 probes to the servo gain adjuster's TP1 and TP2 terminals, respectively

   Oscilloscope setting:
   VOLT ..... 100 mV (both channels)
   SWEEP ..... 1 msec.
   Input coupling ..... AC
5. Play the test disc (SZZP1014F or SZZP1054C).
6. Set the servo gain adjuster's gain switch to position "3", and you will see a 1 kHz signal on the oscilloscope. Adjust **VR704** until the signal amplitudes on both channels become identical to each other.
7. Set the gain switch back to position "2".

*Adjust VR704 until a equals b.

(4) TRACKING GAIN ADJUSTMENT

1. Set up the AF oscillator output for **1 kHz, 150 mVp-p**, and connect it across the OSC and GND terminals on the servo gain adjuster.
2. Connect oscilloscope's CH. 1 and CH. 2 probes to the servo gain adjuster's TP1 and TP2 terminals, respectively

   Oscilloscope setting:
   VOLT ..... 100 mV (both channels)
   SWEEP ..... 1 msec.
   Input coupling ..... AC
3. Switch the player power **ON**, and play the test disc (SZZP1014F or SZZP1054C).
4. Set the servo gain adjuster's gain switch to position "1", and you will see a 1 kHz signal on the oscilloscope. Adjust **VR705** until the signal amplitudes on both channels become identical to each other.
5. Set the gain switch back to position "2".

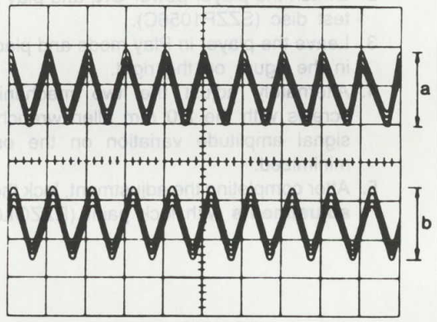

*Adjust **VR705** until a equals b.

(5) FOCUS OFFSET ADJUSTMENT

Note: Make sure that the servo gain adjuster's gain switch is set to position "2".

1. Connect the oscilloscope's CH. 1 probe across **TP703** (+) and **TP701** (V-REF) on the Servo P.C.B. and CH. 2 probe across **TP705** (+) and **TP701** (V-REF).

   Oscilloscope setting:
   VOLT ..... 200 mV (CH. 1)
   1 V (CH. 2)
   SWEEP ..... 1 msec.
   Input coupling ..... AC (both CH. 1 and 2)
   Trigger mode ..... NORM (trigger CH. 1)
2. Switch the player power **ON**, and play the **9** on the test disc (SZZP1057C).
3. Trigger the oscilloscope's CH. 1 so that the following waveforms are observed. Adjust **VR703** until the dip in the RF signal envelope on CH. 1 is smooth and the signal amplitude on CH.2 is minimized, i.e. when amplitude A equals amplitude B.

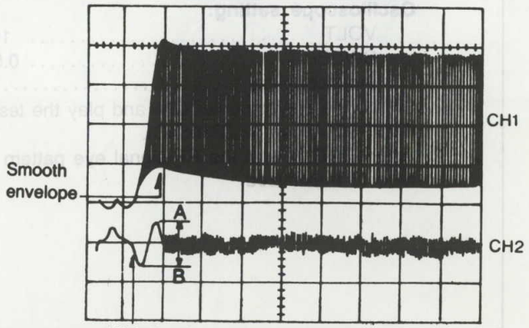

Minimize the amplitude on make A=B.

(6) TRACKING OF OFFSET ADJUSTMENT

Note: Make sure that the servo gain adjuster's gain switch is set to position "2".

1. Connect the oscilloscope's CH. 1 probe across **TP703** (+) and **TP701** (V-REF) on the Servo P.C.B. and CH. 2 probe across **TP704** (+) and **TP701** (V-REF).

   Oscilloscope setting:
   VOLT ..... 200 mV (CH. 1)
   1 V (CH. 2)
   SWEEP ..... 1 msec.
   Input coupling ..... AC (both CH. 1 and 2)
   Trigger mode ..... NORM (trigger CH. 1.)
2. Switch the player power **ON**, and play rack **9** on the test disc (SZZP1057C).
3. Trigger the oscilloscope's CH. 1 so that the following waveforms are observed. Adjust **VR706** until the dip in the RF signal envelope on CH. 1 is smooth and the signal amplitude on CH. 2 is minimized, i.e. when amplitude A equals amplitude B.

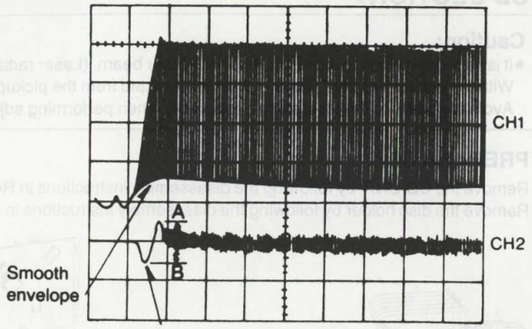

Minimize the amplitude on make A=B.

(7) TRACKING BALANCE ADJUSTMENT

1. Make sure that servo gain adjuster's gain switch is set to position "2".
2. Set up the AF oscillator output for **1 kHz, 150 mVp-p**, and connect it across the OSC and GND terminals on the servo gain adjuster.
3. Connect oscilloscope's CH. 1 probe across **TP703** (+) and **TP701** (V-REF) on the Servo P.C.B. and CH. 2 probe (+) to the OSC terminal on the servo gain adjuster.

   Oscilloscope setting:
   VOFLT ..... 100 mV (CH. 1)
   SWEEP ..... 1 msec.
   Input coupling ..... AC (both CH. 1 and 2)
   Trigger mode ..... NORM (trigger CH. 2)
4. Switch the player power **ON**, and play the test disc (SZZP1014F or SZZP1054C).
5. Adjust the **VR702** so that the section of the output of the waveform marked with ※ is balanced.
6. Disconnect the servo gain adjuster's leads from the player.

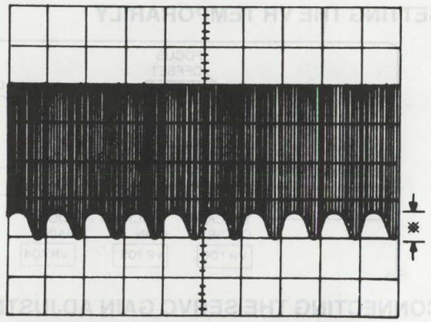

This section of the waveform must be balanced.

■ CHECK OF PLAY OPERATION AFTER ADJUSTMENT

•Checking Skip Search

1. Play an ordinary musical program disc.
2. Press the skip button to check for normal skip search operation (in both the forward and reverse directions).

•Checking Manual Search

1. Play an ordinary musical program disc.
2. Press the manual search button to check for smooth manual search operations at either low or high speed (in both the forward and reverse directions).

•Checking Using Defect Disc

1. Play the 0.7 mm black dot and the 0.7 mm wedge on the defect test disc (SZZP1054C) and verify that no sound skip or noise occurs.
2. Play the middle tracks of the uneven test disc and verify that no sound skip or noise occurs.

■ ALIGNMENT POINT

•Please refer to Circuit Board and Wiring Connection Diagram for test point locations.

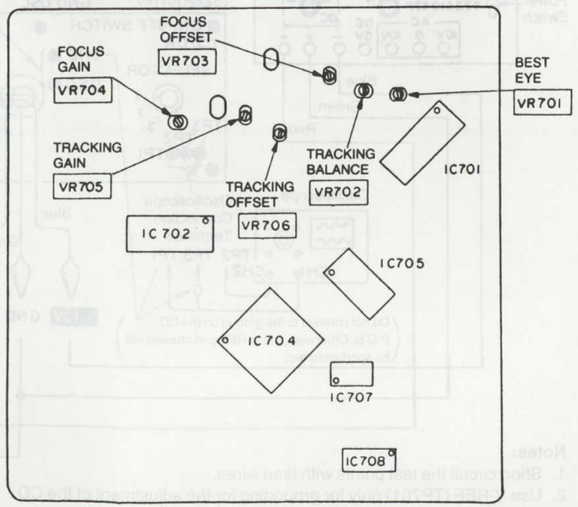

■ NEW SERVO GAIN ADJUSTER (Servo Amp. Adjusting Fixture)

The following introduces the improved version of the current servo gain adjuster (SZZP1017F):

Part number: SZZP1094C

Features:

(1) Contains all oscillation frequencies and output adjustments needed for focus servo gain, tracking servo gain, and tracking balance adjustment (requires no external oscillator).
(2) Panel indicators indicate the best points of focus and tracking servo gains (no oscilloscope needed).
(3) Internal power supply eliminates the need for power supply from the CD player.

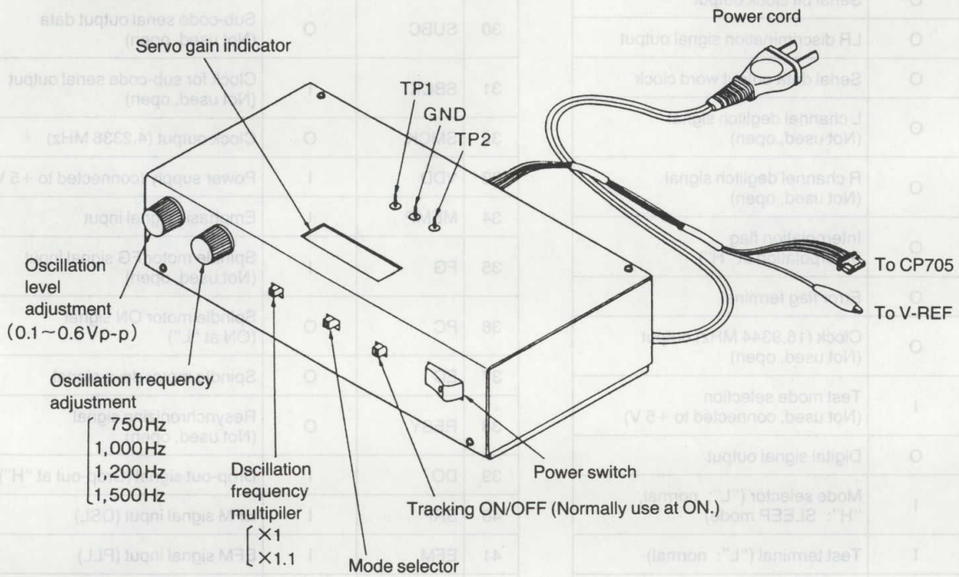

FUNCTION OF IC TERMINALS

•IC305 (M50253P): System control

Pin No.	Mark	Function
1	GND	GND
2	DATA	Deck control data input
3	CLK	Deck control clock input
4	TAPE L	Function select (at "TAPE" position) CD: "HIGH"; TAPE: "LOW"; TUNER: "HIGH"; AUX: "HIGH"
5	HI SP	High speed editing control "HIGH"...High speed "Low"...Normal speed
6	DOLBY	Not used
7	BP H	Beat proof control signal output
8	DMT	Deck muting control signal output
9	AGC OFF	AGC OFF control signal output at ATLS position
10	1H	Playback head select signal output "HIGH"...DECK 1 "LOW"...DECK 2
11	REC	Recording control signal output "HIGH"... "LOW"...
12	2M	DECK 2 motor control signal output "LOW"...Motor drived
13	1M	DECK 1 motor control signal output "LOW"...Motor drived
14	2PL	DECK 2 plunger control signal output "LOW"...Plunger: ON
15	1PL	DECK 1 plunger control signal output "LOW"...Plunger: ON
16	VCC	+5 V

•IC602 (M50253P): Input select control

Pin No.	Mark	Function
1	GND	GND
2	DATA	Function select data signal input
3	CLK	Function clock data signal input
4	CD H	Function control signal output
5	TAPE H	
6	TUNER H	
7	AUX H	
8	AUX L	

Pin No.	CD	TAPE	TUNER	AUX
4	H	L	L	L
5	L	H	L	L
6	L	L	H	L
7	L	L	L	H
8	H	H	H	L

Pin No.	Mark	Function
9	ATT10	Not used
10	ATT11	
11	ATT12	
12	ATT0	ATLS position
13	ATT1	
14	ATLS LED	Not used
15	CD L	CD out terminal muting control signal output
16	VDD	+5 V

Pin No.	+3 dB	0 dB	−3 dB	−6 dB
12	L	H	L	H
13	L	L	H	H

•IC701 (AN8373S): Servo amp.

Pin No.	MarK	I/O Division	Function
1	AMP1	I	RF signal input (×30 amp.)
2	PDAD	I	Photo detector current input (A2)
3	PDA	I	Photo detector current input (A1)
4	PDBD	I	Photo detector current input (A4)
5	PDB	I	Photo detector current input (A3)
6	LPD	I	Non-inverting laser power input
7	LD	O	Laser power auto control output
8	FBL1	I	PD balance adjustment
9	FBL2	I	
10	TBL1	I	Tracking balance adjustment
11	TBL2	I	
12	FOOFS	I	Focus offset adjustment
13	IVA	O	Current/voltage conversion output (A)
14	IVB	O	Current/voltage conversion output (B)
15	FE	O	Focus gain adjustment output
16	FPI	I	Focus error signal input
17	TPI	I	Tracking error signal input
18	C. TPL	I	Tracking error filter capacitor input
19	C. TPH		
20	C. FPL	I	Focus error filter capacitor input
21	C. FPH		
22	TPO	O	Tracking error signal output
23	FPO	O	Focus error signal output
24	FGC	I	Focus gain up signal input (Not used, connected to GND)
25	TGC	I	Tracking gain up signal input (Not used, connected to GND)
26	GD	I	Focus/tracking gain down signal input (Not used, connected to GND)
27	PTO	O	Position detecting amp. output
28	PTI	I	Position detecting amp. input
29	PBO	O	Position detecting buffer output
30	POT	I	Position detecting buffer input
31	BDO	O	Dropout detection output
32	$\overline{\text{RFDET}}$	O	RF detections signal output
33	SDO	O	Dropout detection pulse output
34	C. SBDO	I	Dropout detecting capacitor input
35	ARF	O	RF signal output
36	C AGC	I	AGC detecting capacitor input
37	VCC	I	Power supply (+5 V input)
38	LDON	I	Laser power control input
39	RF IN	I	RF signal input
40	AMPO	O	RF signal output
41	VREF	O	Reference voltage output
42	GND	I	Ground terminal

•IC702 (AN8374S): Servo processor

Pin No.	MarK	I/O Division	Function
1	LSA	I	Phase difference input (A)
2	LSB	I	Phase difference input (B)
3	TEOFS	I	Tracking offset adjustment
4	TE	O	Tracking gain adjustment
5	TEG	I	
6	TE OUT	O	Tracking error signal output
7	TE BPF	I	Tracking error gain detecting filter (Not used, open)
8	FEG	I	Focus gain adjustment
9	FE OUT	O	Focus error signal output
10	CLW	O	Triangular wave oscillator capacitor input
11	VREF	I	Reference voltage input
12	ARF	I	RF signal input
13	CDSL	I	Data slice filter capacitor input
14	FPC	I	Frequency difference signal input
15	GND	I	Ground terminal
16	C. PLL	I	PLL loop filter constant
17	VSS	I	Ground terminal
18	CLK	I	Frequency pull-in clock signal (88.2 kHz) input
19	SRF	O	Sliced and digitized RF signal output
20	PCK	O	Clock output extracted from SRF
21	EFM	O	EFM signal output synchronous with PCK
22	VDD	I	Power supply (+5 V input)
23	SPCNT	O	Track crossing speed control output (Not used, open)
24	SENSE	O	Selector output (track crossing state)
25	TRV	O	Traverse servo control output
26	$\overline{\text{FLOCK}}$	O	Focus lock signal output
27	KICK	O	Track kick signal output
28	LDON	O	Laser power control output
29	VDET	O	Focus/tracking gain up output (Not used, open)
30	CNT1	I	Control input (FOON: Focus servo ON signal)
31	CNT2	I	Control input (TRON: Tracking servo ON signal)
32	CNT3	I	Control input [KICKF: Kick direction (forward) command]
33	CNT4	I	Control input [KICKR: Kick direction (reverse) command]
34	TRVF	I	Traverse forward command signal
35	TRVR	I	Traverse backward command signal
36	$\overline{\text{RFDET}}$	I	RF detection signal input
37	BDO	I	Dropout detection input
38	VCC	I	Power supply (+5 V input)
39	TVPO	O	Traverse position detecting resistor/ capacitor inputs
40	TVPI	O	
41	BROUT	I	Tracking drive control output
42	BRIN	I	Tracking error signal input

•IC703 (AN8377): BTL drive

Pin No.	MarK	I/O Division	Function
1	PVCC	I	Driver power supply (+8.9 input)
2	VCC	I	Power supply (+8.9 V input)
3	TB	O	External transistor base driving output
4	VMON	O	Voltage output
5	TVDI	I	Traverse error signal input
6	FDI	I	Focus error signal input
7	TDI	I	Tracking error signal input
8	VREF	I	Reference voltage input
9	TD−	O	Inverting output of tracking driver
10	TD+	O	Non-inverting output of tracking driver
11	FD−	O	Inverting output of focus driver
12	FD+	O	Non-inverting output of focus driver
13	TVD−	O	Inverting output of traverse driver
14	TVD+	O	Non-inverting output of traverse driver
15	$\overline{\text{RESET}}$	O	Reset signal output
16	PC	I	PC input (connect to GND)

•IC704 (MN6625): Digital signal processing

Pin No.	MarK	I/O Division	Function
1	BYTCK	O	Serial data byte clock (Not use, open)
2	LCLK	O	Crystal frame clock (Not use, open)
3	DEMPH	O	De-emphasis ON signal (de-emphasis ON at "H") (Not used, open)
4	SRDATA	O	Serial data output (MSB first)
5	SCK	O	Serial bit clock output
6	LRCK	O	LR discrimination signal output
7	WDCK	O	Serial data output word clock
8	LDG	O	L channel deglitch signal (Not used, open)
9	RDG	O	R channel deglitch signal (Not used, open)
10	IPFLAG	O	Interpolation flag (Interpolation at "H")
11	FLAG	O	Error flag terminal
12	XCK	O	Clock (16.9344 MHz) output (Not used, open)
13	TEST	I	Test mode selection (Not used, connected to +5 V)
14	TX	O	Digital signal output
15	SLEEP	I	Mode selector ("L": normal, "H": SLEEP mode)
16	CSEL	I	Test terminal ("L": normal)
17	X1	I	Clock input (16.9344 MHz)
18	X2	O	Clock output (16.9344 MHz) (Not used, open)
19	VSS	I	GND terminal
20	BLKCK	O	Sub-code block (Q data) clock (75 Hz)
21	$\overline{\text{CLDCK}}$	O	Sub-code frame (Q data) clock (7.35 kHz)
22	$\overline{\text{SUBQ}}$	O	Sub-code (Q data) output
23	$\overline{\text{RST}}$	I	Reset signal input (reset at "L")
24	MLD	I	Command load signal input
25	MCLK	I	Command clock signal input
26	MDATA	I	Command data input
27	DMUTE	I	Muting control
28	$\overline{\text{TRON}}$	I	Tracking servo ON signal (tracking servo ON at "L")
29	STAT	O	Processing condition (CRC, CUE, CLVS, TT STOP, FCLV)
30	SUBC	O	Sub-code serial output data (Not used, open)
31	SBCK	I	Clock for sub-code serial output (Not used, open)
32	SMCK	O	Clock output (4.2336 MHz)
33	VDD	I	Power supply (connected to +5 V)
34	MEMP	I	Emphasis signal input
35	FG	I	Spindle motor FG signal input (Not used, open)
36	PC	O	Spindle motor ON signal (ON at "L")
37	EC	O	Spindle motor drive signal
38	RESY	O	Resynchronizing signal (Not used, open)
39	DO	I	Drop-out signal (Drop-out at "H")
40	SRF	I	EFM signal input (DSL)
41	EFM	I	EFM signal input (PLL)
42	PCK	I	PLL extract clock input (4.3218 MHz)
43	FPC	O	PLL frequency comparison signal
44 ~ 51	D7 ~ D0	I/O	16 K RAM data input/output
52	RAM/OE	O	16 K RAM OE signal
53	RAM/WE	O	16 K RAM WE signal
54 ~ 64	RAM/A0 ~ RAM/A10	O	16 K RAM address signal (RAMA0: LSB, RAMA10: MSB)

•IC704 (MN6617): Signal Process

Terminal No.	Terminal Symbol	I/O	Function
1	BLKCK	O	This terminal outputs a 75 Hz Clock signal of sub-code block (data Q).
2	CLDCK	O	This terminal outputs a 7.35 kHz clock signal of sub-code block (data Q).
3	SUBQ	O	This terminal outputs a signal of sub-code block (data Q).
4	CRC	——	——
5	RST	I	This is the terminal for resetting the system, e.g. when the unit is powered OFF, the circuit is reset by LOW level signals.
6	MLD	I	MCLK and MDAT signals are input to the terminal.
7	MCLK	I	This terminal receives 8 bit data reading clock signal.
8	MDATA	I	This IC receives a data signal input (8 bit) IC.
9	DMUTE	I	This terminal receives a "HI" level muting signal.
10	TRON	I	This terminal receives a tracking servo control signal. At a "LOW" level . . . . the tracking servo is ON.
11	STAT	O	This terminal outputs data signals (CRL, STOP).
12	SMCK	O	This terminal outputs a clock signal of 4.2336 MHz.
13	PMCK	——	——
14	ITC	I	This is the track counter input terminal, but it is not used in this unit. It is connected to a +5 V power supply.
15	TEST	——	This is the test mode selection input terminal, but it is not used in this unit. It is connected to a +5 V power supply.
16	X2	O	These are the clock transmission terminals (16.9344 MHz).
17	X1	I	
18	SEL	I	This is the data output selection input terminal. At a "HI" level . . . . . parallel data output. At a "LOW" level . . . . serial data output. *When connected, this unit is at a "HI" level.
19	LOG/WDCKS	——	——
20	RDG	——	——
21	DEMPH	O	This is the de-emphasis control output terminal. At a "HI" level . . . . . the de-emphasis control is set ON.
22	IPFLAG	——	——
23	FLAG0	——	——
24	FLAG6	——	——
25	XCK	O	This terminal outputs a clock signal of 16.93 MHz.
26	DA15	O	These terminals output L and R signals.
28	DA13		
31	GND	O	For ground connection.
32, 36	DA10	O	These terminals output L and R signals.
27	DA14	——	——
29	DA12		
30	DA11		
33~42	DA9~DA0		
43~50	D7~D0	I/O	These terminals output RAM data signals (16K).
51	RAMOE	O	This terminal outputs RAM OE control signals (16K).
52	RAMWE	O	This terminal outputs RAM WE control signals (16K).
53~63	RAMA0~RAMA10	O	These terminals output RAM address signals (16K).
64	PC	——	——
65	EC	O	This is the spindle motor control output terminal. The spindle motor operates at a "LOW" level.
66	FG	——	——
67	VCNT	——	For ground connection.
68	REXT		
69, 73	VDD	I	To be connected to a +5 V power supply.
70	PD	——	——
71	PCKO		
72	PCK	I	This is the PLL extraction clock input terminal (f=4.2336 MHz).
74	EFM	I	This terminal receives EFM input signals (PLL).
75	SRF	I	This terminal receives EFM input signals (DSL).
76	DO	I	This terminal receives a drop-out input signal. At a "HI" level . . . . . drop-out comes into effect.
77	CLVS	——	——
78	FPC	O	This terminal outputs a frequency comparison signal.
79~83	——	——	——
84	SBCK	——	For ground connection.

•IC705 (LC3517BML): De Interleave

Pin No.	Mark	I/O Division	Function
1~8	A7~A0	I	Address input
9~11	D0~D2	I/O	Data in • out
12	VSS	——	Ground Connection
13~17	D3~D7	I/O	Data in • out
18	CS	——	Ground connection
19	A10	I	Address input
20	OE	I	Output-enable input
21	WE	I	Read-wright control input
22	A9	I	Address input
23	A8		
24	V_{DD}	I	Power supply

•IC707 (SM5807ES): Digital Filter

Pin No.	Mark	I/O Division	Function
1	XT	I	Clock input
2	XT	——	——
3	CKSL	——	——
4	CKO	——	——
5	LRCL	I	Clock (44.1 kHz)
6	DIN	I	Serial data input
7	BCKIN	I	Serial input, Bit clock input
8	V_{SS}	——	Ground
9	SCSL	I	SCSL=H: System clock=192 fs SCSL=L: System clock=196 fs
10	DGR	O	Degrich signal (Rch) (176.4 kHz)
11	DGL	O	Degrich signal (Lch) (176.4 kHz)
12	DOUT	O	Serial data output
13	WDCK	O	Output control clock (352.8 kHz)
14	LRCO	O	Output control clock (176.4 kHz)
15	BCKO	O	Serial output, Bit clock (8.467 MHz or 8.6436 MHz)
16	V_{SS}	——	+B

•IC708 (UPD6372GSE2): D/A Converter

Pin No.	Mark	I/O Division	Function
1	NC	——	——
2	D. GND	——	Ground (DC)
3	D. V_{DD}	I	+B (DC)
4	D. V_{DD}		
5	A. GND	——	Ground (AC)
6	R. OUT	O	AF signal output (Rch)
7	A. V_{DD}	I	+B (AC)
8	A. V_{DD}		
9	R. REF	I	Reference voltage input (Rch)
10	L. REF	I	Reference voltage input (Lch)
11	L. OUT	O	AF signal output (Lch)
12	A. GND	——	Ground (AC)
13	LRCK	I	Clock input
14	LRSEL	I	Ground
15	SI	I	Serial data input
16	CLK	I	Bit clock input

•IC800 (MN1871610RRQ): System control

Pin No.	Mark	Function
1	VDD	+5 V
2	OSC1	Clock output (4 MHz)
3	OSC2	Clock input (4 MHz)
4	VSS	GND
5	XI	Clock input (32 kHz)
6	XO	Clock output (32 kHz)
7	VREF−	Reference voltage terminal (GND)
8	ADIN7	DECK2 front side record prevention tab detection "HIGH"...Recording is not possible "LOW"...Recording is possible
9	ADIN6	DECK 2 cassette tape insertion detection When a cassette tape has been inserted in DECK 2, S972 becomes active and a "LOW" level signal is input to this terminal to set the deck on standby.
10	ADIN5	DECK 1 cassette tape insertion detection When a cassette tape has been inserted in DECK 1, S952 becomes active and a "LOW" level signal is input to this terminal to set the deck on standby.
11	ADIN4	Display select signal and counter reset signal input
12	ADIN3	Deck operation signal input
13	ADIN2	Not used (connect to VDD)
14	ADIN1	CD operation signal input
15	ADIN0	Operation signal input
16	VREF+	Reference voltage terminal (VDD)
17	MKCLK	Deck control clock output
18	MKDATA	Deck control data output
19	——	Not used
20	——	Not used
21	TUNER L	Tuner control signal output Tuner operation on: "LOW"
22	——	Not used
23	CD CLOSE	CD cover open/close detection signal input "HIGH"...Open "LOW"...Close
24	AGCLK	Mode select control clock signal output
25	AGDATA	Mode select control data output

Pin No.	Mark	Function
26	POWER CONT	Power supply control signal output
27	MUTE A	Audio circuit muting control signal output
28	XBS OFF H	XBS control signal output "HIGH"...XBS OFF "LOW"...XBS ON
29	VOL UP	Motor (for volume) control signal output
30	VOL DOWN	
31	RIMOCON IN	Remote control signal input
32	BLKCK	CD sub code clock signal input
33	STATUS	CD status signal input
34	SENSE	CD sense signal input
35	RST	Reset signal input
36	PLL CL	PLL tuner clock signal output
37	PLL CE	PLL tuner control signal output
38	PLL DI	PLL tuner data output
39	CLDCK	CD sub code clock input
40	SUBQ	CD sub code clock input
41	——	Not used
42	——	Not used
43	——	Not used
44	POWER	CD signal process circuit power control
45	MUTE H	CD muting signal output
46	TRREV	Traverse "Reverse" command signal output

Pin No.	Vol. Up	Vol. Down
29	"HIGH"	"LOW"
30	"LOW"	"HIGH"

Pin No.	Mark	Function
47	TRFWD	Traverse "Forward" command signal output
48	CNT4	Optical servo IC control output
49	CNT3	Optical servo IC control output
50	CNT2	Optical servo IC control output
51	CNT1	Optical servo IC control output
52	FLOCK	Optical servo focus lock input
53	REST	Rest switch (S701) signal input
54	——	GND
55	REMOCON STBY	Remote control sensor power control
56	POWER DET	Power supply circuit operation signal input
57	TIMER	Timer mode detection signal input
58	VOL LIMIT	Not used
59	XBS SW	Not used
60	MLD	CD signal process IC control signal output
61	MDATA	CD signal process IC control data output
62	MCLK	CD signal process IC control clock output
63	B.P	Beat proof switch signal input
64 ~ 93	SEG29 ~ SEG0	LCD segment signal output
94 ~ 97	COM3 ~ COM0	LCD common signal output
98	VLC3	LCD bias reference voltage input V3
99	VLC2	LCD bias reference voltage input V2
100	VLC1	LCD bias reference voltage input V1

Notes : * Important safety notice:
Components identified by ⚠ mark have special characteristics important for safety. When replacing any of these components use only manufacturer's specified parts.
* The parenthesized indications in the Remarks columns specify the areas. (Refer to the cover page for area.) Parts without these indications can be used for all areas.
* Remote Control Ass'y:
Supply period for three years from termination of production.

Ref. No.	Part No.	Part Name & Description	Remarks
		INTEGRATED CIRCUIT(S)	
IC1	RVITA7358FT	I. C, FM FRONT END	
IC2	TA8132F	I. C, FM/AM IF AMP	
IC3	LM7001	I. C, PLL	
IC301	M51167AFP	I. C, HEAD SELECT	
IC302	BA7755	I. C, R/P SELECT	
IC305	M50253P	I. C, SYSTEM CONTROL	
IC601	BA3308M	I. C, MIC AMP	
IC602	M50253P	I. C, INPUT SELECTOR	
IC603, 604	MC14066BCP	I. C, INPUT SELECTOR	
IC608	AN7134A	I. C, POWER AMP	
IC609	BA3920	I. C, POWER SUPPLY CONT.	
IC610	S81250HGT	I. C, REGULATOR	
IC701	AN8373SE2	I. C, CD SERVO SYSTEM	
IC702	AN8374SE2	I. C, PWM DRIVE/PLL	
IC703	AN8377N	I. C, MOTOR DRIVE	
IC704	MN6625	I. C, SIGNAL PROCESS	
IC705	LC3517BMLTP	I. C, DE INTERLEAVE	
IC706	TA8410P	I. C, MOTOR DRIVE	
IC707	SM5807ESE2	I. C, DIGITAL FILTER	
IC708	UPD6376GSE2	I. C, D/A CONV. /BUFFER	
IC800	MN1871610RRR	I. C, SYSTEM CONTROL	
IC801	S8053HNB-T	I. C, PRESET SIGNAL GENELATOR	
IC802	BA6218	I. C, MOTOR DRIVE	
IC951	DN6851ALB	I. C, HALL	
IC971	DN6851ALB	I. C, HALL	
		TRANSISTOR(S)	
Q1, 2	2SC3313BTA	TRANSISTOR	
Q3	2SC1674LTA	TRANSISTOR	
Q4	2SC3311RTA	TRANSISTOR	
Q5, 6	RVTDTA143XST	TRANSISTOR	
Q7-9	2SC3311RTA	TRANSISTOR	
Q10	2SC3311RTA	TRANSISTOR	
Q11, 12	2SA1309RTA	TRANSISTOR	
Q13, 14	2SC3311RTA	TRANSISTOR	
Q15	RVTDTA143XST	TRANSISTOR	
Q18	2SK381CTA	TRANSISTOR	
Q19	RVTDTC114TST	TRANSISTOR	
Q20	RVTDTA143XST	TRANSISTOR	
Q101, 102	2SJ40CDTA	TRANSISTOR	
Q103, 104	RVTDTC144TST	TRANSISTOR	
Q108	2SJ40CDTA	TRANSISTOR	

Ref. No.	Part No.	Part Name & Description	Remarks
Q111	RVTDTC144TST	TRANSISTOR	
Q201, 202	2SJ40CDTA	TRANSISTOR	
Q203, 204	RVTDTC144TST	TRANSISTOR	
Q208	2SJ40CDTA	TRANSISTOR	
Q211	RVTDTC144TST	TRANSISTOR	
Q301, 302	2SC3311ARTA	TRANSISTOR	
Q303	2SD1450STA	TRANSISTOR	
Q305	UN4217TA	TRANSISTOR	
Q306	2SC3311RTA	TRANSISTOR	
Q307, 308	2SD1450STA	TRANSISTOR	
Q309	2SD965RTA	TRANSISTOR	
Q310	2SK381CDTA	TRANSISTOR	
Q311	2SD965RTA	TRANSISTOR	
Q312	RVTDTC144TST	TRANSISTOR	
Q313, 314	2SB621RTA	TRANSISTOR	
Q315, 316	UN4216TA	TRANSISTOR	
Q317	RVTDTC144TST	TRANSISTOR	
Q318	2SK381CDTA	TRANSISTOR	
Q319-321	UN411FTA	TRANSISTOR	
Q322	UN4214TA	TRANSISTOR	
Q324-328	2SC3311RTA	TRANSISTOR	
Q329	UN4215TA	TRANSISTOR	
Q330, 331	2SC3311RTA	TRANSISTOR	
Q401-403	2SC3311RTA	TRANSISTOR	
Q407	2SD1450RTA	TRANSISTOR	
Q470	2SC3312RTA	TRANSISTOR	
Q472	2SC3312RTA	TRANSISTOR	
Q501-503	2SC3311RTA	TRANSISTOR	
Q507	2SD1450RTA	TRANSISTOR	
Q570	2SC3312RTA	TRANSISTOR	
Q572	2SC3312RTA	TRANSISTOR	
Q601	UN4219TA	TRANSISTOR	
Q602	UN4113TA	TRANSISTOR	
Q604	2SB1393AU	TRANSISTOR	
Q605	2SC1684RTA	TRANSISTOR	
Q609	UN4211TA	TRANSISTOR	
Q650	2SC3311RTA	TRANSISTOR	
Q701	2SA1309STA	TRANSISTOR	
Q703	UN4110TA	TRANSISTOR	
Q704, 705	UN4216TA	TRANSISTOR	
Q800	UN411FTA	TRANSISTOR	
Q801	UN4211TA	TRANSISTOR	
Q802	UN421FTA	TRANSISTOR	
Q803	UN411FTA	TRANSISTOR	
Q805, 806	UN411FTA	TRANSISTOR	
Q807	2SC3311RTA	TRANSISTOR	

Ref. No.	Part No.	Part Name & Description	Remarks
Q812	UN4213TA	TRANSISTOR	
		DIODE(S)	
D1, 2	1SV147T4MATU	DIODE	
D3	MA4051MTA	DIODE	
D4	RVDKV1235ZB	DIODE	
D5	MA4130MTA	DIODE	
D6	MA165TA	DIODE	
D8, 9	MA165TA	DIODE	
D10	MA165TA	DIODE	
D301	MA165TA	DIODE	
D302	RVDMTZ4R7BTA	DIODE	
D303, 304	MA165TA	DIODE	
D601	MA165TA	DIODE	
D606	MA165TA	DIODE	
D608	MA4100MTA	DIODE	
D609	MA165TA	DIODE	
D611	MA4068MTA	DIODE	
D612	MA723TA	DIODE	
D650-653	RVDP300DLF	DIODE	
D654	MA723TA	DIODE	
D707, 708	MA165TA	DIODE	
D803-806	MA165TA	DIODE	
D811	MA165TA	DIODE	
D814-816	MA165TA	DIODE	
D817	LN031493PM	LED ASS'Y (D800, D810)	
D833	MA165TA	DIODE	
D951	RVD1SS133TA	DIODE	
D971	RVD1SS133TA	DIODE	
		VARIABLE RESISTOR(S)	
VR301	RVNCC14B1T-A	V. R, TAPE SPEED ADJ. (HIGH)	
VR302	RVNCC24B1T-A	V. R, TAPE SPEED ADJ. (NORMAL)	
VR303	RVNCC73B1T-A	V. R, TAPE SPEED ADJ.	
VR470, 570	EWAGQ2C95G54	V. R, TONE CONTROL	
VR472, 572	EWAGS2C95D54	V. R, XBS LEVEL	
VR473, 573	EWC07A027B54	V. R, VOLUME CONTROL	
VR701	EVNDXAA00B14	V. R, BEST EYE ADJ.	
VR702	EVNDXAA00B24	V. R, TRACKING BALANCE ADJ.	
VR703	EVNDXAA00B14	V. R, FOCUS OFFSET ADJ.	
VR704	EVNDXAA00B14	V. R, FOCUS GAIN ADJ.	
VR705	EVNDXAA00B14	V. R, TRACKING GAIN ADJ.	
VR706	EVNDXAA00B14	V. R, TRACKING OFFSET ADJ.	
		COMPONENT COMBINATION(S)	
Z1	RXABPWB6AT	COMPONENT COMBINATION	
Z301-303	EXBDF9035G0	COMPONENT COMBINATION	
Z800	RCD0002	REMOTE SENSOR	

Ref. No.	Part No.	Part Name & Description	Remarks
		COIL(S)	
L3	RLQZP4R7KT-Y	COIL	
L4	RL02B001-T	COIL	
L5	RLV6C003-0	COIL	
L7	RL09B18-M	COIL	
L8, 9	RLQZP221KT-Y	COIL	
L12	RL01B001-T	COIL	
L15	RLQZP221KT-Y	COIL	
L17	RLQZP4R7KT-Y	COIL	
L301	RL08C002M-T	COIL	
L302, 303	RLQZB470KT-D	COIL	
L603	RLL500050T-Y	COIL	
L800, 801	RLL500050T-Y	COIL	
L805	RLQZP2R2KT-Y	COIL	
L809	RLQZP2R2KT-Y	COIL	
L811-813	RLQZP2R2KT-Y	COIL	
L815	RLQZP2R2KT-Y	COIL	
L816	RLQZB101KT-D	COIL	
L819-821	RLQZP2R2KT-Y	COIL	
		TRANSFORMER(S)	
T1	RLI2B001-T	TRANSFORMER	
T601	RTP1U1B001-C	POWER TRANSFORMER	(EB) ⚠
T601	RTP1U1E001-C	POWER TRANSFORMER	(EG) ⚠
		FILTER(S)	
CF1, 2	RLFFETWLA02D	CERAMIC FILTER	
CF3	RLFDFTA01D	CERAMIC FILTER	
		OSCILLATOR(S)	
X1	RSXZ456KM01	OSCILLATOR	
X2	RVCF7200NZN	OSCILLATOR	
X701	RSXZ16M9M01T	OSCILLATOR	
X800	RVBCSA4R0MGT	OSCILLATOR	
X801	RSXD32K7F02	OSCILLATOR	
		SWITCH(ES)	
S601	RJJ1SE01-H	SW, AC/DC(J603)	⚠
S701	SSHD5-E	SW, RESET	
S800	EVQ21405R	SW, TAPE STOP	
S802	EVQ21405R	SW, PLAY/STOP	
S803	EVQ21405R	SW, POWER	
S804	EVQ21405R	SW, REVERSE SIDE PLAY	
S806	EVQ21405R	SW, CD PAUSE	
S807	EVQ21405R	SW, FUNCTION(TAPE)	
S808	EVQ21405R	SW, DISPLAY	
S809	EVQ21405R	SW, TAPE FAST/TPS	

Ref. No.	Part No.	Part Name & Description	Remarks
S811	EVQ21405R	SW, CD REPEAT	
S812	EVQ21405R	SW, FUNCTION(TUNER/BAND)	
S813	EVQ21405R	SW, COUNTER RESET	
S814	EVQ21405R	SW, DECK SELECT "DECK1"	
S816	EVQ21405R	SW, AUTO EDIT(A/B)	
S817	EVQ21405R	SW, FUNCTION(CD)	
S819	EVQ21405R	SW, DECK SELECT"DECK2"	
S821	EVQ21405R	SW, CD SKIP/SEARCH	
S822	EVQ21405R	SW, AUX	
S823	EVQ21405R	SW, FRONT SIDE PLAYBACK	
S825	EVQ21405R	SW, CANCEL	
S826	EVQ21405R	SW, TIME SET/TUNING+	
S827	EVQ21405R	SW, TAPE FAST/TPS	
S831	EVQ21405R	SW, REV MODE	
S833	EVQ21405R	SW, SKIP/SEARCH	
S834	EVQ21405R	SW, SLEEP	
S835	EVQ21405R	SW, REC PAUSE	
S837	EVQ21405R	SW, TAPE LENGTH	
S838	EVQ21405R	SW, TIMER	
S839	RSH1A90ZA-U	SW, CD OPEN/CLOSE	
S840	EVQ21405R	SW, ONE TOUCH EDIT(NORMAL)	
S843	EVQ21405R	SW, TIME SET/TUNING-	
S844	EVQ21405R	SW, ONE TOUCH EDIT(HIGH)	
S846	EVQ21405R	SW, ATLS	
S847	EVQ21405R	SW, TIMER CHECK	
S849	EVQ21405R	SW, FIT	
S850	EVQ21405R	SW, TIME ADJUST	
S851	RSS3A18YA-H	SW, FM MODE/BEAT PROOF	
S854	RSS2A63ZA-H	SW, TIMER-REC	
S899	SSP83	SW, LASER POWER OFF	
S951	RSH1A89ZA-U	SW, DECK1 MODE DETECT	
S952	RSH1A90ZA-U	SW, TAPE INSERT DETECT	
S953	RSH1A90ZA-U	SW, CrO2 TAPE DETECT	
S971	RSH1A89ZA-U	SW, DECK2 MODE DETECT	
S972	RSH1A90ZA-U	SW, TAPE INSERT DETECT	
S973	RSH1A90ZA-U	SW, REC PREVENTION DETECT	
S974	RSH1A90ZA-U	SW, REC PREVENTION DETECT	
S975	RSH1A90ZA-U	SW, CrO2 TAPE DETECT	
		VARIABLE CAPACITOR(S)	
CT1	RCV10AF1T-S	TRIMMER CAPACITOR	
CT2	ECRLA020E53R	VARIABLE CAPACITOR	
		IC PROTECTOR(S)	
IP600	RAHICPN15TA	IC PROTECTOR	
IP601-603	RAHICPN5TA	IC PROTECTOR	
		FUSE	
F601	XBA2C31TB0U	FUSE	⚠

Ref. No.	Part No.	Part Name & Description	Remarks
		DISPLAY	
LCD1	RSL5020	LCD	
		JACK(S)	
J601	RJJ1D25ZA-C	JACK, MIC	
J602	RJJD7S2YA-C	JACK, HEADPHONES	
J603	RJJ1SE01-H	JACK, AC IN	⚠
J604	RJH3207N-0	JACK, AUX IN	

Notes : * Capacity valuse are in microfarads (uF) unless specified otherwise, P=Pico-farads(pF) F=Farads(F)
* Resistance values are in ohms, unless specified otherwise, 1K=1,000(OHM) , 1M=1,000k(OHM)

Ref. No.	Part No.	Values & Remarks
		RESISTORS
R1-3	ERDS2TJ104T	1/4W 100K
R4	ERDS2TJ470T	1/4W 47
R5	ERDS2TJ151T	1/4W 150
R6	ERDS2TJ331T	1/4W 330
R7	ERDS2TJ391T	1/4W 390
R8	ERDS2TJ274T	1/4W 270K
R9	ERDS2TJ105T	1/4W 1M
R10	ERDS2TJ561T	1/4W 560
R11	ERDS2TJ330T	1/4W 33
R12	ERDS2TJ104T	1/4W 100K
R13	ERDS2TJ470T	1/4W 47
R15	ERDS2TJ391T	1/4W 390
R16	ERDS2TJ683T	1/4W 68K
R17	ERDS2TJ104T	1/4W 100K
R18	ERDS2TJ103T	1/4W 10K
R20	ERDS2TJ332T	1/4W 3.3K
R21	ERDS2TJ562T	1/4W 5.6K
R22	ERDS2TJ473T	1/4W 47K
R23	ERDS2TJ102T	1/4W 1K
R24	ERDS2TJ223T	1/4W 22K
R25	ERDS2TJ103T	1/4W 10K
R27	ERDS2TJ151T	1/4W 150
R28, 29	ERDS2TJ471T	1/4W 470
R30	ERDS2TJ104T	1/4W 100K
R31	ERDS2TJ222T	1/4W 2.2K
R32	ERDS2TJ473T	1/4W 47K
R33-38	ERDS2TJ103T	1/4W 10K
R39	ERDS2TJ102T	1/4W 1K
R40	ERDS2TJ223T	1/4W 22K
R50-52	ERDS2TJ103T	1/4W 10K
R55	ERDS2TJ103T	1/4W 10K
R56	ERDS2TJ222T	1/4W 2.2K
R60	ERDS2TJ104T	1/4W 100K
R61	ERDS2TJ332T	1/4W 3.3K
R62, 63	ERDS2TJ681T	1/4W 680
R71	ERDS2TJ274T	1/4W 270K
R102	ERDS2TJ123T	1/4W 12K
R103	ERDS2TJ122T	1/4W 1.2K
R105	ERDS2TJ330T	1/4W 33
R106	ERDS2TJ392T	1/4W 3.9K
R107	ERDS2TJ682T	1/4W 6.8K
R108	ERDS2TJ222T	1/4W 2.2K
R109	ERDS2TJ104T	1/4W 100K
R110	ERDS2TJ223T	1/4W 22K
R111	ERDS2TJ822T	1/4W 8.2K
R112	ERDS2TJ101T	1/4W 100

Ref. No.	Part No.	Values & Remarks
R115	ERDS2TJ474T	1/4W 470K
R116	ERDS2TJ154T	1/4W 150K
R120	ERDS2TJ822T	1/4W 8.2K
R128	ERDS2TJ152T	1/4W 1.5K
R130	ERDS2TJ822T	1/4W 8.2K
R202	ERDS2TJ123T	1/4W 12K
R203	ERDS2TJ122T	1/4W 1.2K
R205	ERDS2TJ330T	1/4W 33
R206	ERDS2TJ392T	1/4W 3.9K
R207	ERDS2TJ682T	1/4W 6.8K
R208	ERDS2TJ222T	1/4W 2.2K
R209	ERDS2TJ104T	1/4W 100K
R210	ERDS2TJ223T	1/4W 22K
R211	ERDS2TJ822T	1/4W 8.2K
R212	ERDS2TJ101T	1/4W 100
R215	ERDS2TJ474T	1/4W 470K
R216	ERDS2TJ154T	1/4W 150K
R220	ERDS2TJ822T	1/4W 8.2K
R228	ERDS2TJ152T	1/4W 1.5K
R230	ERDS2TJ822T	1/4W 8.2K
R301	ERDS2TJ334T	1/4W 330K
R302	ERDS2TJ102T	1/4W 1K
R303	ERDS2TJ103T	1/4W 10K
R304, 305	ERDS2TJ102T	1/4W 1K
R306	ERDS2TJ472T	1/4W 4.7K
R308	ERDS2TJ822T	1/4W 8.2K
R309	ERDS2TJ1R2T	1/4W 1.2
R310	ERDS2TJ103T	1/4W 10K
R311, 312	ERDS2TJ472T	1/4W 4.7K
R313	ERDS2TJ332T	1/4W 3.3K
R314	ERDS2TJ102T	1/4W 1K
R315	ERDS2TJ221T	1/4W 220
R316	ERDS2TJ1R2T	1/4W 1.2
R317	ERDS2TJ562T	1/4W 5.6K
R318	ERDS2TJ153T	1/4W 15K
R319	ERDS2TJ183T	1/4W 18K
R320	ERDS2TJ334T	1/4W 330K
R321	ERDS2TJ221T	1/4W 220
R322	ERDS2TJ1R2T	1/4W 1.2
R323	ERDS2TJ682T	1/4W 6.8K
R325	ERDS2TJ183T	1/4W 18K
R326	ERDS2TJ123T	1/4W 12K
R327	ERDS2TJ334T	1/4W 330K
R328	ERDS2TJ123T	1/4W 12K
R329	ERDS1VJ680T	1/2W 68
R330	ERDS2TJ104T	1/4W 100K
R331	ERDS2TJ332T	1/4W 3.3K
R332	ERDS2TJ474T	1/4W 470K
R333	ERDS2TJ472T	1/4W 4.7K

Ref. No.	Part No.	Values & Remarks
R334	ERDS2TJ102T	1/4W 1K
R336	ERDS2TJ223T	1/4W 22K
R337	ERDS2TJ1R2T	1/4W 1.2
R338	ERDS2TJ103T	1/4W 10K
R339	ERDS2TJ1R2T	1/4W 1.2
R340	ERDS2TJ334T	1/4W 330K
R346-349	ERDS2TJ472T	1/4W 4.7K
R350	ERDS2TJ473T	1/4W 47K
R351	ERDS2TJ472T	1/4W 4.7K
R352, 353	ERDS2TJ473T	1/4W 47K
R355	ERDS2TJ473T	1/4W 47K
R356	ERDS2TJ335T	1/4W 3.3M
R357	ERDS2TJ222T	1/4W 2.2K
R358, 359	ERDS2TJ472T	1/4W 4.7K
R360	ERDS2TJ102T	1/4W 1K
R361, 362	ERDS2TJ104T	1/4W 100K
R364	ERDS2TJ104T	1/4W 100K
R365	ERDS2TJ222T	1/4W 2.2K
R366	ERDS2TJ103T	1/4W 10K
R401	ERDS2TJ223T	1/4W 22K
R402	ERDS2TJ473T	1/4W 47K
R403	ERDS2TJ563T	1/4W 56K
R407	ERDS2TJ223T	1/4W 22K
R408	ERDS2TJ123T	1/4W 12K
R409	ERDS2TJ473T	1/4W 47K
R411	ERDS2TJ103T	1/4W 10K
R412	ERDS2TJ473T	1/4W 47K
R413	ERDS2TJ103T	1/4W 10K
R428	ERDS2TJ151T	1/4W 150
R430	ERDS2TJ2R2T	1/4W 2.2
R435	ERDS2TJ101T	1/4W 100
R436	ERDS2TJ473T	1/4W 47K
R438	ERDS2TJ821T	1/4W 820
R449	ERDS2TJ221T	1/4W 220
R450	ERDS2TJ224T	1/4W 220K
R470	ERDS2TJ105T	1/4W 1M
R471	ERDS2TJ123T	1/4W 12K
R472	ERDS2TJ682T	1/4W 6.8K
R473	ERDS2TG152T	1/4W 1.5K
R478	ERDS2TJ104T	1/4W 100K
R479	ERDS2TJ682T	1/4W 6.8K
R480	ERDS2TJ391T	1/4W 390
R482	ERDS2TJ103T	1/4W 10K
R485	ERDS2TJ472T	1/4W 4.7K
R490	ERDS2TJ124T	1/4W 120K
R501	ERDS2TJ223T	1/4W 22K
R502	ERDS2TJ473T	1/4W 47K
R503	ERDS2TJ563T	1/4W 56K
R507	ERDS2TJ223T	1/4W 22K

Ref. No.	Part No.	Values & Remarks
R508	ERDS2TJ123T	1/4W 12K
R509	ERDS2TJ473T	1/4W 47K
R511	ERDS2TJ103T	1/4W 10K
R512	ERDS2TJ473T	1/4W 47K
R513	ERDS2TJ103T	1/4W 10K
R528	ERDS2TJ151T	1/4W 150
R530	ERDS2TJ2R2T	1/4W 2.2
R535	ERDS2TJ101T	1/4W 100
R536	ERDS2TJ473T	1/4W 47K
R538	ERDS2TJ821T	1/4W 820
R549	ERDS2TJ221T	1/4W 220
R550	ERDS2TJ224T	1/4W 220K
R570	ERDS2TJ105T	1/4W 1M
R571	ERDS2TJ123T	1/4W 12K
R572	ERDS2TJ682T	1/4W 6.8K
R573	ERDS2TG152T	1/4W 1.5K
R578	ERDS2TJ104T	1/4W 100K
R579	ERDS2TJ682T	1/4W 6.8K
R580	ERDS2TJ391T	1/4W 390
R582	ERDS2TJ103T	1/4W 10K
R585	ERDS2TJ472T	1/4W 4.7K
R590	ERDS2TJ124T	1/4W 120K
R601	ERDS2TJ472T	1/4W 4.7K
R602	ERDS2TJ222T	1/4W 2.2K
R603	ERDS2TJ101T	1/4W 100
R604	ERDS2TJ223T	1/4W 22K
R605	ERDS2TJ101T	1/4W 100
R606	ERDS2TJ105T	1/4W 1M
R607	ERDS2TJ473T	1/4W 47K
R608	ERDS2TJ471T	1/4W 470
R610	ERDS2TJ472T	1/4W 4.7K
R612-615	ERDS2TJ103T	1/4W 10K
R616, 617	ERDS2TJ104T	1/4W 100K
R618	ERDS2TJ393T	1/4W 39K
R620	ERDS2TJ222T	1/4W 2.2K
R621, 622	ERDS2TJ103T	1/4W 10K
R623	ERDS2TJ102T	1/4W 1K
R630	ERDS2TJ1R5T	1/4W 1.5
R631	ERDS2TJ223T	1/4W 22K
R634	ERDS2TJ473T	1/4W 47K
R635	ERDS2TJ153T	1/4W 15K
R636	ERDS2TJ223T	1/4W 22K
R642	ERDS2TJ472T	1/4W 4.7K
R644	ERDS2TJ333T	1/4W 33K
R649	ERDS2TJ104T	1/4W 100K
R690	ERDS2TJ681T	1/4W 680
R691	ERDS2TJ472T	1/4W 4.7K
R701	ERDS2TJ472T	1/4W 4.7K
R702	ERDS2TJ103T	1/4W 10K
R705	ERDS2TJ103T	1/4W 10K
R706	ERDS2TJ823T	1/4W 82K
R707	ERDS2TJ123T	1/4W 12K

Ref. No.	Part No.	Values & Remarks
R708	ERDS2TJ683T	1/4W 68K
R710	ERDS2TJ333T	1/4W 33K
R711	ERDS2TJ105T	1/4W 1M
R712, 713	ERDS2TJ102T	1/4W 1K
R715	ERDS2TJ222T	1/4W 2.2K
R716	ERDS2TJ102T	1/4W 1K
R717	ERDS2TJ104T	1/4W 100K
R720	ERDS2TJ120T	1/4W 12
R721	ERDS2TJ471T	1/4W 470
R722	ERDS2TJ222T	1/4W 2.2K
R723	ERDS2TJ682T	1/4W 6.8K
R725	ERDS2TJ103T	1/4W 10K
R726	ERDS2TJ562T	1/4W 5.6K
R727	ERDS2TJ332T	1/4W 3.3K
R728	ERDS2TJ682T	1/4W 6.8K
R732	ERDS2TJ562T	1/4W 5.6K
R733	ERDS2TJ473T	1/4W 47K
R735	ERDS2TJ392T	1/4W 3.9K
R736	ERDS2TJ472T	1/4W 4.7K
R737	ERDS2TJ102T	1/4W 1K
R738	ERDS2TJ104T	1/4W 100K
R740	ERDS2TJ471T	1/4W 470
R741	ERDS2TJ102T	1/4W 1K
R742	ERDS2TJ104T	1/4W 100K
R743	ERDS2TJ471T	1/4W 470
R745	ERDS2TJ470T	1/4W 47
R746	ERDS2TJ223T	1/4W 22K
R748	ERDS2TJ222T	1/4W 2.2K
R749	ERDS2TJ224T	1/4W 220K
R750-752	ERDS2TJ562T	1/4W 5.6K
R755	ERDS2TJ223T	1/4W 22K
R800	ERDS2TG103T	1/4W 10K
R802-804	ERDS2TG103T	1/4W 10K
R805	ERDS2TG102T	1/4W 1K
R807-809	ERDS2TG102T	1/4W 1K
R812	ERDS2TG102T	1/4W 1K
R814-816	ERDS2TG102T	1/4W 1K
R817	ERDS2TG122T	1/4W 1.2K
R819, 820	ERDS2TG122T	1/4W 1.2K
R822	ERDS2TG152T	1/4W 1.5K
R824, 825	ERDS2TG152T	1/4W 1.5K
R826	ERDS2TG222T	1/4W 2.2K
R828, 829	ERDS2TG222T	1/4W 2.2K
R832	ERDS2TG272T	1/4W 2.7K
R834, 835	ERDS2TG272T	1/4W 2.7K
R836	ERDS2TG392T	1/4W 3.9K
R838, 839	ERDS2TG392T	1/4W 3.9K
R840	ERDS2TG562T	1/4W 5.6K
R842, 843	ERDS2TG562T	1/4W 5.6K
R844	ERDS2TG103T	1/4W 10K
R846, 847	ERDS2TG103T	1/4W 10K
R848	ERDS2TG183T	1/4W 18K

Ref. No.	Part No.	Values & Remarks
R850, 851	ERDS2TG183T	1/4W 18K
R852	ERDS2TJ474T	1/4W 470K
R854, 855	ERDS2TG563T	1/4W 56K
R859	ERDS2TJ224T	1/4W 220K
R860	ERDS2TJ471T	1/4W 470
R861	ERDS2TJ106T	1/4W 10M
R862	ERDS2TJ105T	1/4W 1M
R863	ERDS2TG563T	1/4W 56K
R864	ERDS2TG104T	1/4W 100K
R865	ERDS2TG823T	1/4W 82K
R867	ERDS2TG183T	1/4W 18K
R868	ERDS2TJ473T	1/4W 47K
R870	ERDS2TJ681T	1/4W 680
R873, 874	ERDS2TJ103T	1/4W 10K
R875	ERDS2TG102T	1/4W 1K
R876	ERDS2TJ103T	1/4W 10K
R877	ERDS2TG183T	1/4W 18K
R879	ERDS2TJ104T	1/4W 100K
R881	ERDS2TJ101T	1/4W 100
R884, 885	ERDS2TJ221T	1/4W 220
R891	ERDS2TJ473T	1/4W 47K
R893	ERDS2TJ103T	1/4W 10K
R896, 897	ERDS2TJ103T	1/4W 10K
R898	ERDS2TJ474T	1/4W 470K
R899	ERDS2TJ104T	1/4W 100K
R901	ERDS2TJ821T	1/4W 820
R902	ERDS2TG103T	1/4W 10K
R910	ERDS2TJ472T	1/4W 4.7K
R912	ERDS2TJ104T	1/4W 100K
R913	ERDS2TJ472T	1/4W 4.7K
R914	ERDS2TJ471T	1/4W 470
R916	ERDS2TJ104T	1/4W 100K
R924	ERDS2TJ471T	1/4W 470
R926, 927	ERDS2TJ472T	1/4W 4.7K
R929	ERDS2TG272T	1/4W 2.7K
R934, 935	ERDS2TG272T	1/4W 2.7K
R937	ERDS2TJ391T	1/4W 390
R938	ERDS2TJ104T	1/4W 100K
R940-942	ERDS2TJ103T	1/4W 10K
		CAPACITORS
C1	ECBT1H180JC5	50V 18P
C2	ECBT1H102KB5	50V 1000P
C3	ECBT1H330J5	50V 33P
C4	ECBT1H102KB5	50V 1000P
C5	ECBT1C103MS5	16V 0.01U
C6, 7	ECBT1H181KB5	50V 180P
C8	ECBT1H102KB5	50V 1000P
C9	ECBT1H4R7KC5	50V 4.7P
C10	ECBT1H2R2KC5	50V 2.2P
C11, 12	ECBT1H102KB5	50V 1000P

Ref. No.	Part No.	Values & Remarks
C14, 15	ECBT1H102KB5	50V 1000P
C18	ECBT1H150JC5	50V 15P
C19	ECBT1H100JC5	50V 10P
C20	ECFR1C473MR	16V 0.047U
C23	ECEA1HN010SB	50V 1U
C24	ECBT1C103MS5	16V 0.01U
C25	ECFR1C223MR	16V 0.022U
C26	ECEA1CU101B	16V 100U
C27	ECBT1C103MS5	16V 0.01U
C29	ECEA1HU010B	50V 1U
C30	ECBT1H270J5	50V 27P
C31	ECEA1AU470B	10V 47U
C32	ECFR1C223MR	16V 0.022U
C33, 34	ECEA1CU100B	16V 10U
C35	ECFR1C223MR	16V 0.022U
C36	ECBT1H331KB5	50V 330P
C37	ECFR1C683MR	16V 0.068U
C38, 39	ECFR1C823MR	16V 0.082U
C40, 41	ECFR1C123MR	16V 0.012U
C44	ECBT1H330J5	50V 33P
C45	ECFR1C223MR	16V 0.022U
C46	ECEA0JU101B	6.3V 100U
C47	ECFR1C473MR	16V 0.047U
C48	ECEA1CU100B	16V 10U
C49	ECBT1H270J5	50V 27P
C50	ECBT1H300J5	50V 30P
C51	ECBT1H102KB5	50V 1000P
C52	ECEA1EU3R3B	25V 3.3U
C53	ECEA1HU010B	50V 1U
C62	ECFR1C103MR	16V 0.01U
C63	ECBT1H150JC5	50V 15P
C64, 65	ECFR1C223MR	16V 0.022U
C66	ECBT1H102KB5	50V 1000P
C67	ECBT1H471KB5	50V 470P
C69	ECBT1C332MR5	16V 3300P
C71	ECBT1H102KB5	50V 1000P
C72	ECBT1H331KB5	50V 330P
C73	ECFR1C223MR	16V 0.022U
C74	ECBT1H470J5	50V 47P
C78	ECBT1H331KB5	50V 330P
C82	ECBT1C103MS5	16V 0.01U
C101	ECBT1H102KB5	50V 1000P
C104	ECFR1C333JR	16V 0.033U
C105, 106	ECBT1H471KB5	50V 470P
C107	ECFR1C183KR	16V 0.018U
C108	ECEA1HK010B	50V 1U
C109	ECEA1EK4R7B	25V 4.7U
C110	ECEA1HK010B	50V 1U
C111	ECBT1H102KB5	50V 1000P
C112	ECFR1C473MR	16V 0.047U
C113	ECEA1CK100B	16V 10U
C114	ECBT1C272MR5	16V 2700P

Ref. No.	Part No.	Values & Remarks
C115, 116	ECBT1H102KB5	50V 1000P
C117	ECEA1EK4R7B	25V 4.7U
C118	ECBT1H102KB5	50V 1000P
C119	ECBT0J223NS5	6.3V 0.022U
C124	ECEA0JU221B	6.3V 220U
C201	ECBT1H102KB5	50V 1000P
C204	ECFR1C333JR	16V 0.033U
C205, 206	ECBT1H471KB5	50V 470P
C207	ECFR1C183KR	16V 0.018U
C208	ECEA1HK010B	50V 1U
C209	ECEA1EK4R7B	25V 4.7U
C210	ECEA1HK010B	50V 1U
C211	ECBT1H102KB5	50V 1000P
C212	ECFR1C473MR	16V 0.047U
C213	ECEA1CK100B	16V 10U
C214	ECBT1C272MR5	16V 2700P
C215, 216	ECBT1H102KB5	50V 1000P
C217	ECEA1EK4R7B	25V 4.7U
C218	ECBT1H102KB5	50V 1000P
C219	ECBT0J223NS5	6.3V 0.022U
C224	ECEA0JU221B	6.3V 220U
C301	ECBT1C103MS5	16V 0.01U
C302	ECQV1H474JZ3	50V 0.47U
C303	ECQP2A272JZT	100V0.0027U
C304	ECQP2A152JZT	100V0.0015U
C305	ECBT1C103NS5	16V 0.01U
C306	ECQP2A392JZT	100V 3900P
C307	ECEA1HU010B	50V 1U
C308	ECQV1H473JZ3	50V 0.047U
C309	ECEA1AU101B	10V 100U
C310, 311	ECBT1H102KB5	50V 1000P
C312, 313	ECFR1C103KR	16V 0.01U
C314	ECEA0JKS101B	6.3V 100U
C315	ECEA1AU330B	10V 33U
C316	ECEA1AU101B	10V 100U
C318	ECEA1CK100B	16V 10U
C319	ECEA1HK0R1B	50V 0.1U
C320	ECFR1C223MR	16V 0.022U
C321	ECEA1HK010B	50V 1U
C322	ECEA1CU101B	16V 100U
C323	ECBT1C103MS5	16V 0.01U
C328	ECKF1H153MD	50V 0.015U
C329	ECEA0JU221B	6.3V 220U
C331	ECBT1H104ZF5	50V 0.1U
C332	ECEA1AU330B	10V 33U
C333	ECEA1HK0R1B	50V 0.1U
C335	ECEA0JU470B	6.3V 47U
C336, 337	ECBT1H681KB5	50V 680P
C401	ECEA1CK100B	16V 10U
C409	ECEA1AU222E	10V 2200U
C410	ECEA1AU101B	10V 100U
C411	ECEA0JU101B	6.3V 100U

Ref. No.	Part No.	Values & Remarks
C412	ECEA1HK010B	50V 1U
C413	ECBT1H102KB5	50V 1000P
C414	ECQV1H224JZ3	50V 0.22U
C470	ECEA1HU010B	50V 1U
C471	ECBT1H101KB5	50V 100P
C472, 473	ECEA1HK010B	50V 1U
C474	ECFR1C103MR	16V 0.01U
C477	ECEA1HKR22B	50V 0.22U
C478	ECFR1C473MR	16V 0.047U
C479	ECFR1C222MR	16V 2200P
C501	ECEA1CK100B	16V 10U
C509	ECEA1AU222E	10V 2200U
C510	ECEA1AU101B	10V 100U
C511	ECEA0JU101B	6.3V 100U
C512	ECEA1HK010B	50V 1U
C513	ECBT1H102KB5	50V 1000P
C514	ECQV1H224JZ3	50V 0.22U
C570	ECEA1HU010B	50V 1U
C571	ECBT1H101KB5	50V 100P
C572, 573	ECEA1HK010B	50V 1U
C574	ECFR1C103MR	16V 0.01U
C577	ECEA1HKR22B	50V 0.22U
C578	ECFR1C473MR	16V 0.047U
C579	ECFR1C222MR	16V 2200P
C601	ECBT1H101KB5	50V 100P
C602	ECEA1AK101B	10V 100U
C603	ECEA1CK100B	16V 10U
C604	ECEA1AK220B	10V 22U
C605	ECEA1AK101B	10V 100U
C606	ECEA1HK010B	50V 1U
C609	ECBT1H471KB5	50V 470P
C613	ECEA1EU101B	25V 100U
C614	ECEA1AU471B	10V 470U
C615	ECEA1EU472	25V 4700U
C619, 620	ECEA1EK4R7B	25V 4.7U
C621	ECEA1AU101B	10V 100U
C624	ECEA1AU101B	10V 100U
C625	ECEA1HK010B	50V 1U
C626	ECBT1H471KB5	50V 470P
C627, 628	ECEA1EK4R7B	25V 4.7U
C629	ECEA1CK100B	16V 10U
C631	ECEA1CU100B	16V 10U
C632	ECKR1H471KB5	50V 470P
C650	ECEA0JU471B	6.3V 470U
C680-683	ECKW1H473ZF5	50V 0.047U
C701	ECEA0JU471B	6.3V 470U
C702	ECEA1AU221BG	10V 220U
C703, 704	ECFR1C104MR	16V 0.1U
C705	ECEA1CN100SB	16V 10U
C706	ECFR1C104MR	16V 0.1U
C707	ECEA0JU101B	6.3V 100U
C708	ECBT1H681KB5	50V 680P

Ref. No.	Part No.	Values & Remarks
C710	ECEA1HU010BG	50V 1U
C711	ECBT1H470J5	50V 47P
C712	ECEA1HU010BG	50V 1U
C713	ECEA1HN010SB	50V 1U
C715	ECFR1C333KR	16V 0.033U
C716	ECEA1HN010SB	50V 1U
C717	ECFR1C333KR	16V 0.033U
C718	ECBT1H102KB5	50V 1000P
C720	ECEA1HNR47SB	50V 0.47U
C721	ECFR1C683MR	16V 0.068U
C722	ECEA1HNR47SB	50V 0.47U
C723	ECEA1AN220SB	10V 22U
C725	ECFR1C104MR	16V 0.1U
C726	ECQV1H334JZ3	50V 0.33U
C727	ECQV1H474JZ3	50V 0.47U
C728	ECEA1CU220BG	16V 22U
C730	ECEA1CU220BG	16V 22U
C733	ECBT1H270J5	50V 27P
C735	ECBT1H270J5	50V 27P
C736	ECBT1H104ZF5	50V 0.1U
C737	ECEA0JU471B	6.3V 470U
C738	ECEA1CU100BG	16V 10U
C741	ECBT1C103MR5	16V 0.01U
C742	ECEA0JU101B	6.3V 100U
C743	ECBT1H104ZF5	50V 0.1U
C747	ECBT1C332MR5	16V 3300P
C748	ECFR1C333KR	16V 0.033U
C750	ECEA0JU101B	6.3V 100U
C751	ECFR1C333KR	16V 0.033U
C752	ECEA1HUR33B	50V 0.33U
C753	ECEA1HPS010B	50V 1U
C755	ECEA1HPS010B	50V 1U
C756	ECBT1C332MR5	16V 3300P
C757	ECEA1CU100BG	16V 10U
C758	ECFR1C104MR	16V 0.1U
C760	ECFR1C104MR	16V 0.1U
C761	ECEA0JU471B	6.3V 470U
C762, 763	ECBT1H471KB5	50V 470P
C800-804	ECBT1H681KB5	50V 680P
C805	ECBT1H102KB5	50V 1000P
C806	ECEA0JU221B	6.3V 220U
C807	ECBT1H102KB5	50V 1000P
C808	ECEA0JU221	6.3V 220U
C809	ECBT1H120JC5	50V 12P
C810	ECBT1H220JC5	50V 22P
C811	ECBT1H681KB5	50V 680P
C813, 814	ECBT1H101KB5	50V 100P
C815	ECBT1H681KB5	50V 680P
C818, 819	ECBT1C103MS5	16V 0.01U
C820	ECEA0JU470B	6.3V 47U
C822	ECBT1H101KB5	50V 100P
C827	ECEA1AU101B	10V 100U

Ref. No.	Part No.	Values & Remarks
C829	ECEA1AU221B	10V 220U
C834	ECEA1AU221B	10V 220U
C862, 863	ECBT1H101KB5	50V 100P
C867	ECBT1H102KB5	50V 1000P
C869	ECBT1C103MS5	16V 0.01U
C873, 874	ECBT1H102KB5	50V 1000P
C875	ECEA1HK2R2B	50V 2.2U
C876	ECBT1H331KB5	50V 330P
C951	ECBT1H101KB5	50V 100P
C971	ECBT1H101KB5	50V 100P

Ref. No.	Part No.	Part Name & Description	Remarks
		CABINET PARTS	
1	RJP5G18ZA	CONNECTOR(CP301)	
2	RJP4G18ZA	CONNECTOR(CP302)	
3	RJP10G18ZA	CONNECTOR(CP307)	
4	RJP9G18ZA	CONNECTOR(CP309)	
5	RWJ1107075QQ	FLAT CABLE(W303)	
6	RWJ1109075QQ	FLAT CABLE(W304)	
7	RWJ4704215KQ	FLAT CABLE(W305)	
8	RWJ4704105KQ	FLAT CABLE(W306)	
9	RMK0059	CHASSIS	
10	XTV26+6F	SCREW	
11	XTV3+12G	SCREW	
12	RGW0056-K	KNOB, VOLUME	
13	RKK0010-K	BATTERY COVER	
14	EAS12P450B	SPEAKER	
15	RDG5782ZB	GEAR	
16	REX0148Y	SPEAKER CABLE	
17	RGU0273-K1	EJECT BUTTON, DECK2	
18	RGU0274-K1	EJECT BUTTON, DECK1	
19	RML0148	EJECT LEVER, DECK	
20	RUW170YA	SPRING	
21	XTV3+10G	SCREW	
23	RGU0207-K2	EJECT BUTTON, CD	
24	RKQ0038A-K	UPPER CABINET	
25	RME0025-2	SPRING	
26	RML0114	EJECT LEVER, CD	
28	XTN3+12GFZ	SCREW	
29	XTV3+60G	SCREW	
30	RMC1236ZB	SHIELD PLATE	
31	RJT031W008	CONNECTOR(CP1)	
32	RJT031W007	CONNECTOR(CP2)	
33	RJP2G17ZA	CONNECTOR(CP3)	
34	RDG5953ZC	GEAR	
35	RDG5954ZA	GEAR	
37	REX0088Y	CABLE ASS'Y(CW309)	
38	RGU0209A-K	BUTTON, DECK OPERATION	
39	RGU0276A-K	BUTTON, MODE etc.	
40	RGV0028-K	KNOB, TIMER REC. FM MODE	
41	RGV0029-K	KNOB, TONE	
43	RMB0017-1	SPRING	
44	RMK0076	CHASSIS	
46	RSC0072	SHIELD PLATE	
48	RUA867ZB	CHASSIS	
49	RUD129XA	SPRING	
50	RWJ1105080QQ	FLAT CABLE	
51	XQN17+C33	SCREW	
53	RJS5T4ZA	CONNECTOR(CM804)	
54	RJT005W007	CONNECTOR(CP701)	
55	RJT005W010	CONNECTOR(CP702, 703)	
57	RJT028W004	CONNECTOR(CP803)	

Ref. No.	Part No.	Part Name & Description	Remarks
58	RJU028W020	SOCKET(CS801, 802)	
60	RJU028W004	SOCKET(CS803)	
61	REX0087Y	CABLE ASS'Y(CW307)	
62	RJS4T6ZA	SOCKET(CM604)	
63	RJP4G9YA	CONNECTOR(CM6051)	
64	RJU028W004	CONNECTOR(CS601)	
65	RJU028W010	CONNECTOR(CS602)	
66	RJU028W020	CONNECTOR(CS603)	
67	RMY0040	HEAT SINK	
68	XTV3+10F	SCREW	
69	RJB0235B	P.C.B	
70	REX0149Y	CABLE ASS'Y	
71	REX0181	CABLE ASS'Y(W607)	
72	RJF28ZA	FUSE HOLDER	⚠
73	RJT028W004	CONNECTOR(CP601)	
74	RJT028W010	CONNECTOR(CP602)	
75	RJT028W020	CONNECTOR(CP603, 801, 802)	
76	RJP3G4YA	CONNECTOR(CP607)	
77	RJP4G4YA	CONNECTOR(CP608)	
80	RJU031W008	CONNECTOR(CS1)	
81	RJU031W007	CONNECTOR(CS2)	
82	RWJ4704140QK	FLAT CABLE(W604)	
83	RMA0069-3	ANGLE	
84	XTV3+6F	SCREW	
85	RJP4G9YA	CONNECTOR(CM6052)	
86	REX0182Y	CABLE ASS'Y	
87	RMN0048	CHASSIS	
88	RYH0001	HANDLE ASS'Y	
89	XEARR225DA-Y	TELESCOPIC ANTENNA	
92	XYN3+F12FY	SCREW	
93	RMK0058A	CHASSIS	
94	RFKHXDT5EG	REAR CABINET ASS'Y	(EG)
94	RFKHXDT5EB	REAR CABINET ASS'Y	(EB)
94A	RJC931ZC	BATTERY SPRING	
94B	REX0084	TERMINAL ASS'Y	
95	RFKGXDT5EG	FRONT CABINET ASS'Y	
95A	RGP0093A-K	BADGE	
96	RFKLXDT5NA	CD COVER ASS'Y	
96A	RYF0016	DISC HOLDER ASS'Y	
96B	RFKNXDT9A	MAGNET ASS'Y	
97	RFKLXDT5NB	CASSETTE LID ASS'Y(DECK1)	
98	RFKLXDT5NC	CASSETTE LID ASS'Y(DECK2)	
99	RJC511ZB	BATTERY TERMINAL	
100	RJC751ZA	BATTERY TERMINAL	
101	RFM156ZA	MOTOR ASS'Y	
102	SODD101-3Z	TRAVERSE DECK ASS'Y	
102A	SHGD112	RUBBER(A)	
102B	SHGD113-1	RUBBER(B)	
103	RHM281YA	SHAFT	
104	RJS16Q11ZA	CONNECTOR(CS705)	
105	RJP5G35ZA	CONNECTOR(CP705)	
106	RJP2G18ZA	CONNECTOR(CP701, 702, 703)	

Ref. No.	Part No.	Part Name & Description	Remarks
107	RJU005W010	CONNECTOR(CS702, 703)	
108	RMK0051	CHASSIS	
109	RJU005W007	CONNECTOR	
110	RJP3G1ZA	CONNECTOR(TP1, 2, 3)	
111	REX0219	CABLE ASS'Y(W704E)	
113	RJP2G17ZA	CONNECTOR(CP704)	
114	RJB0233B-2	P.C.B	

Ref. No.	Part No.	Part Name & Description	Remarks

CABINET PARTS LOCATION

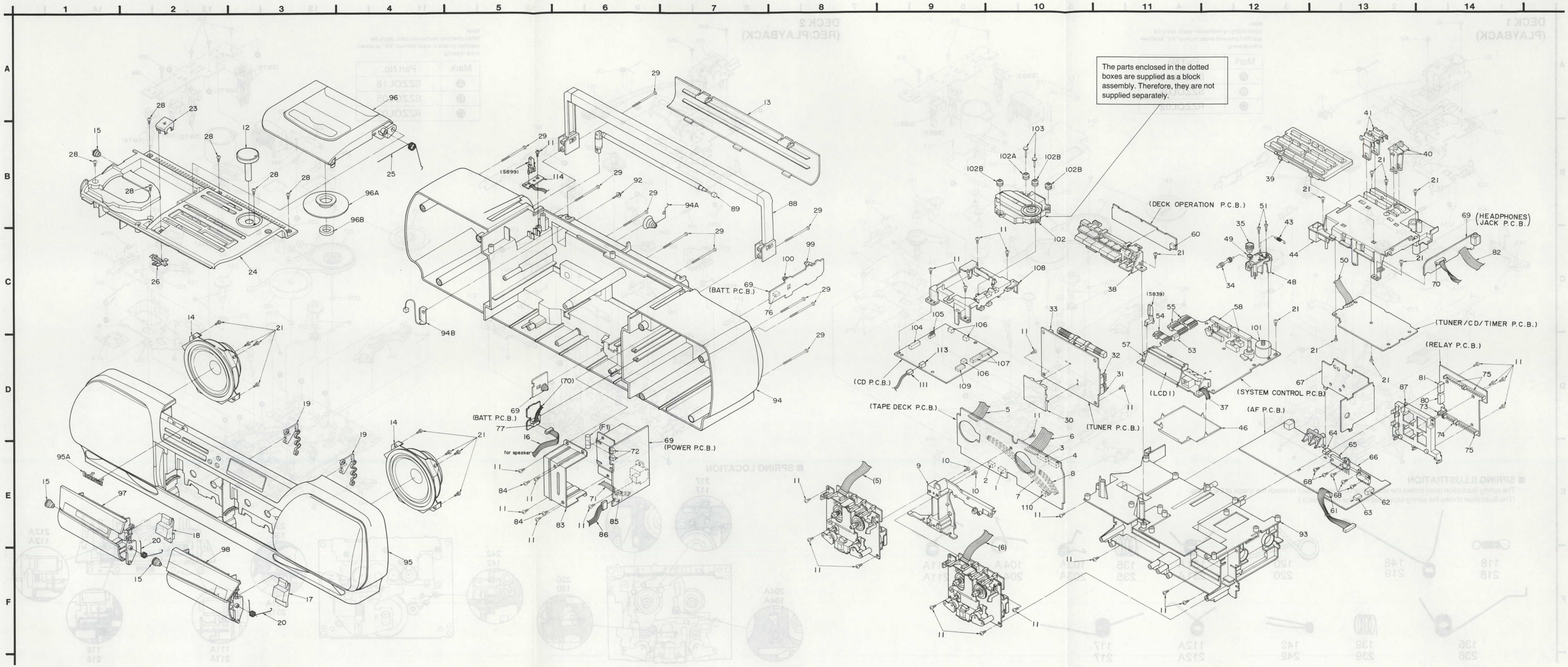

MECHANISM PARTS LOCATION

DECK 1 (PLAYBACK)

Note:
When changing mechanism parts, apply the specified grease to areas marked "XX" as shown in the drawing.

Mark	Part No.
A	SZZOL18
B	SZZOL05
C	RZZOL02

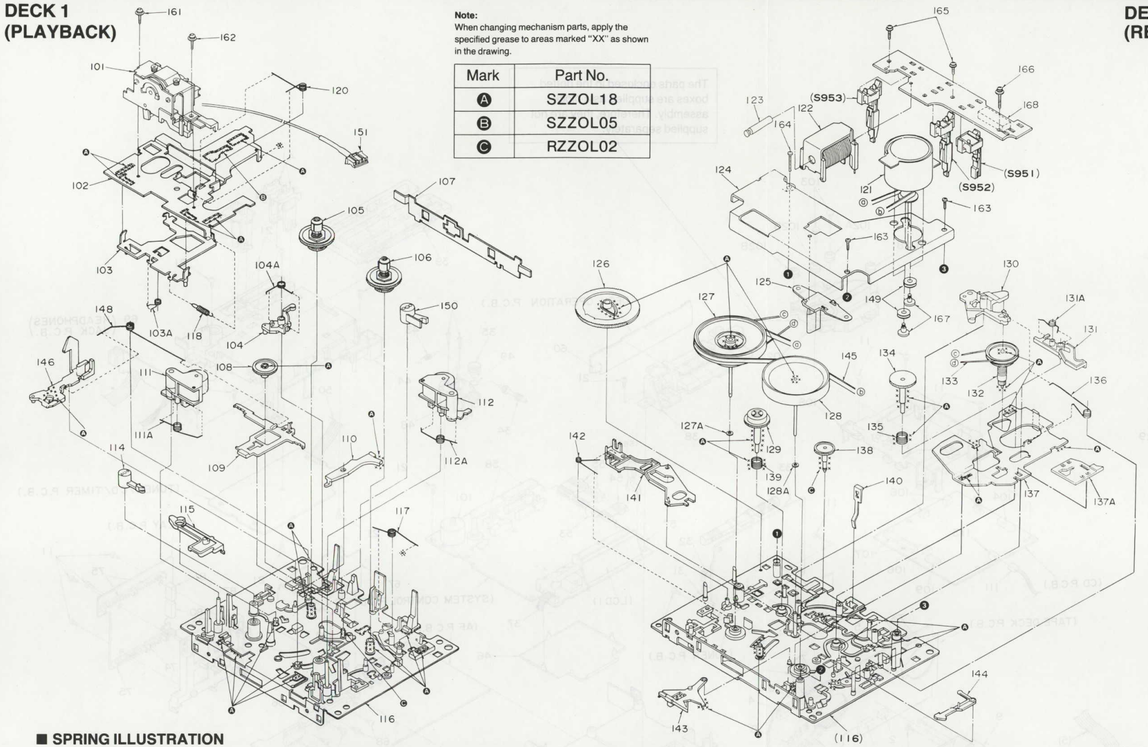

DECK 2 (REC/PLAYBACK)

Note:
When changing mechanism parts, apply the specified grease to areas marked "XX" as shown in the drawing.

Mark	Part No.
A	SZZOL18
B	SZZOL05
C	RZZOL02

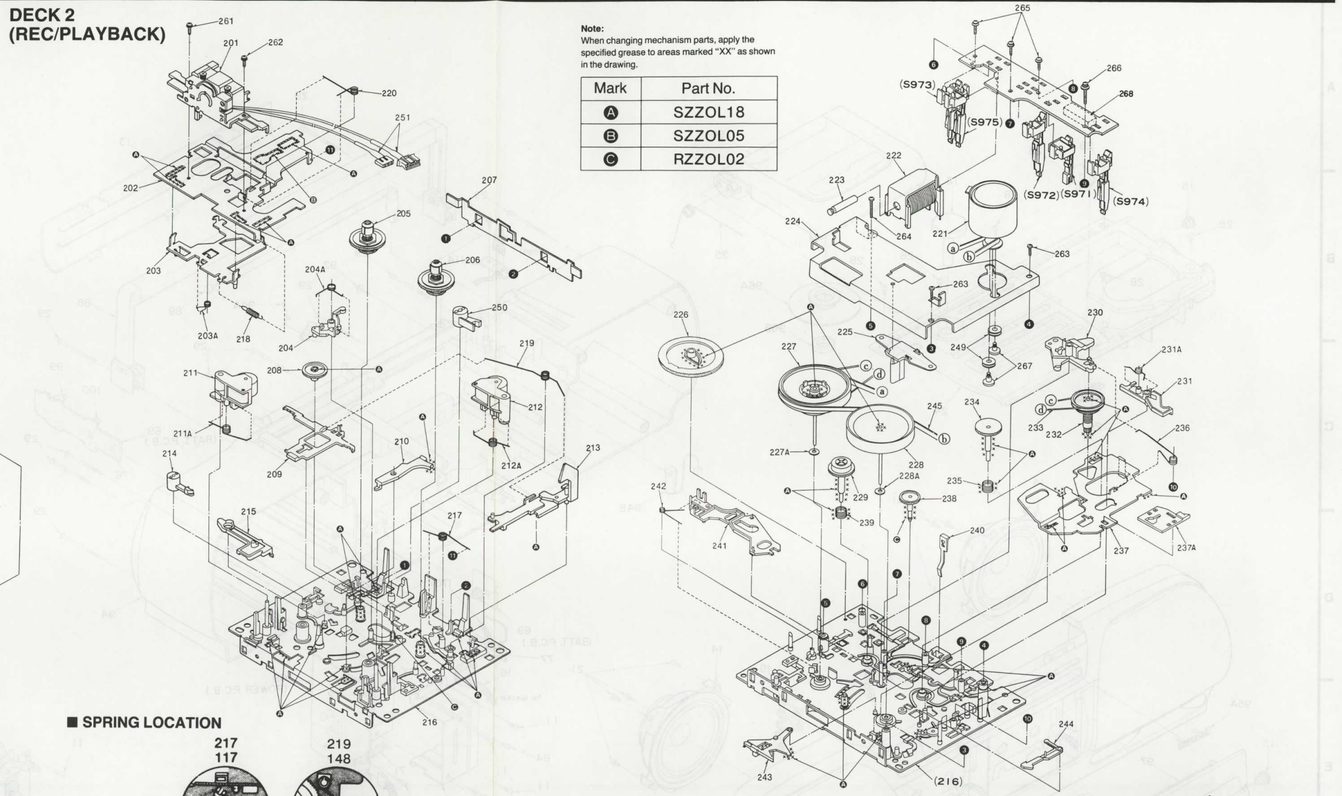

■ SPRING ILLUSTRATION

The spring illustration used shows the actual size so it can be used to check the shape of the spring.
(The illustration shows the spring separated from the mechanism.)

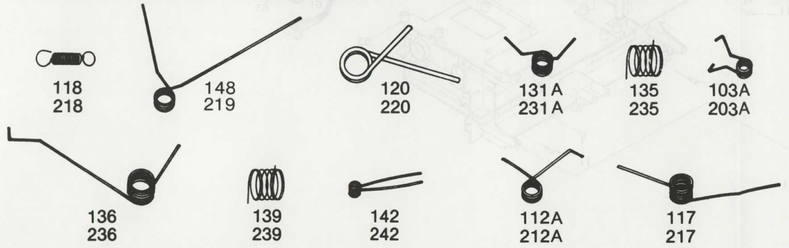

■ SPRING LOCATION

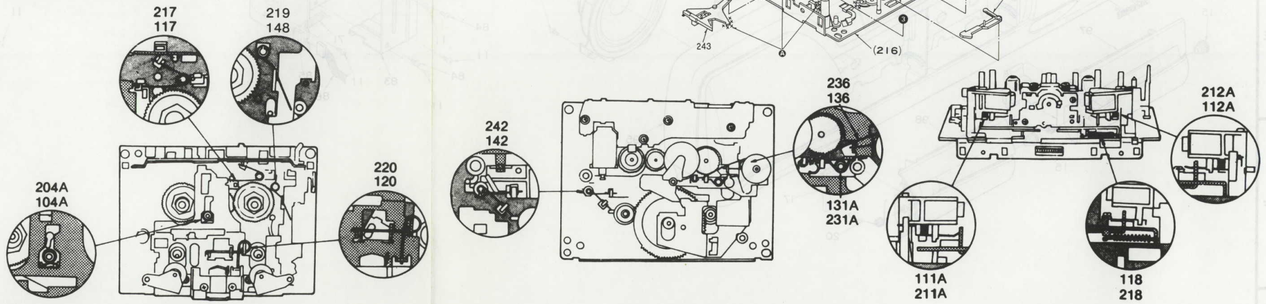

Ref. No.	Part No.	Part Name & Description	Remarks
		MECHANISM PARTS	
		DECK1(P.B)	
101	RXQ0051	HEAD ASS'Y	
102	RUA793ZF	CHASSIS	
103	RZLAR300A	LEVER ASS'Y	
103A	RUW143ZA	SPRING	
104	1UB0089Z	ARM	
104A	RUW148ZA	SPRING	
105	1DM0018ZB	REEL TABLE ASS'Y	
106	1DM0017ZB	REEL TABLE ASS'Y	
107	RML0069-1	LEVER	
108	RDG5772ZC	GEAR	
109	RUB508ZB	LEVER	
110	RUB506ZB	LEVER	
111	1UB0088ZB	PINCH ROLLER	
111A	RUW141ZA	SPRING	
112	1UB0087ZB	PINCH ROLLER	
112A	RUW140ZB	SPRING	
114	RNL1ZD	ARM	
115	RUB503ZD	LEVER	
116	RZUAR300A	CHASSIS ASS'Y	
117	RUW142ZA	SPRING	
118	RUD105ZA	SPRING	
120	RUW139ZA	SPRING	
121	RFM133ZA	MOTOR ASS'Y	
122	1UE0015ZB	RLUNGER	
123	RUB428ZE	SHAFT	
124	RUL1030YA	PLATE	
125	RMD5014ZC	SPACER	
126	RDG5927ZG	GEAR	
127	1DW0037ZB	FLYWHEEL ASS'Y	
127A	RNW139ZA	WASHER	
128	1DW0038ZB	FLYWHEEL ASS'Y	
128A	RNW141ZA	WASHER	
129	1DG0006ZB	GEAR ASS'Y	
130	RUB513ZD	LEVER	
131	1UB0091Z	LEVER	
131A	RUW146ZA	SPRING	
132	1DR0011ZB	PULLEY ASS'Y	
133	RDV90ZB	BELT	
134	RDG5769ZA	GEAR	
135	RUQ111ZB	SPRING	
136	RUW145ZA	SPRING	
137	1UB0090ZA	ROD	
137A	RUB512ZB	ROD	
138	RDG5773ZB	GEAR	
139	RUQ112ZA	SPRING	
140	RUS609ZC	SPRING	
141	RUB514ZC	LEVER	
142	RUW147ZA	SPRING	

Ref. No.	Part No.	Part Name & Description	Remarks
143	RUB515ZA	LEVER	
144	RUB509ZA	LEVER	
145	RDV108ZA	BELT	
146	RUB507ZD	LEVER	
148	RUW144ZA	SPRING	
149	RHG3032ZA	RUBBER	
150	RNL180ZB	LEVER	
151	REX0074	CABLE ASS'Y	
161	XTW2+6L	SCREW	
162	XTW2+8L	SCREW	
163	XTN26+7J	SCREW	
164	RHE5203ZA	SCREW	
165	XTW2+8S	SCREW	
166	XYC2+JF16	SCREW	
167	RHD26002	SCREW	
168	RJS7T7ZA	CONNECTOR(J951)	
		DECK2(R/P)	
201	RXQ0007	HEAD ASS'Y	
202	RUA793ZF	CHASSIS	
203	RZLAR300A	LEVER ASS'Y	
203A	RUW143ZA	SPRING	
204	1UB0089Z	ARM	
204A	RUW148ZA	SPRING	
205	1DM0018ZB	REEL TABLE ASS'Y	
206	1DM0017ZB	REEL TABLE ASS'Y	
207	RML0069-1	LEVER	
208	RDG5772ZC	GEAR	
209	RUB508ZB	LEVER	
210	RUB506ZB	LEVER	
211	1UB0088ZB	PINCH ROLLER	
211A	RUW141ZA	SPRING	
212	1UB0087ZB	PINCH ROLLER	
212A	RUW140ZB	SPRING	
213	RUB507ZD	LEVER	
214	RNL1ZD	ARM	
215	RUB503ZD	LEVER	
216	RZUAR300A	CHASSIS ASS'Y	
217	RUW142ZA	SPRING	
218	RUD105ZA	SPRING	
219	RUW144ZA	SPRING	
220	RUW139ZA	SPRING	
221	RFM133ZA	MOTOR ASS'Y	
222	1UE0015ZB	PLUNGER	
223	RUB428ZE	SHAFT	
224	RUL1030YA	PLATE	
225	RMD5014ZC	SPACER	
226	RDG5927ZG	GEAR	
227	1DW0037ZB	FLYWHEEL ASS'Y	
227A	RNW139ZA	WASHER	
228	1DW0038ZB	FLYWHEEL ASS'Y	

Ref. No.	Part No.	Part Name & Description	Remarks
228A	RUW141ZA	WASHER	
229	1DG0006ZB	GEAR ASS'Y	
230	RUB513ZD	LEVER	
231	1UB0091Z	LEVER	
231A	RUW146ZA	SPRING	
232	1DR0011ZB	PULLEY ASS'Y	
233	RDV90ZB	BELT	
234	RDG5769ZA	GEAR	
235	RUQ111ZB	SPRING	
236	RUW145ZA	SPRING	
237	1UB0090ZA	ROD	
237A	RUB512ZB	ROD	
238	RDG5773ZA	GEAR	
239	RUQ112ZA	SPRING	
240	RUS609ZC	SPRING	
241	RUB514ZC	LEVER	
242	RUW147ZA	SPRING	
243	RUB515ZA	LEVER	
244	RUB509ZA	LEVER	
245	RDV108ZA	BELT	
249	RHG3032ZA	RUBBER	
250	RNL180ZB	LEVER	
251	REX0062	CABLE ASS'Y	
261	XTW2+6L	SCREW	
262	XTW2+8L	SCREW	
263	XTN26+7J	SCREW	
264	RHE5203ZA	SCREW	
265	XTW2+8S	SCREW	
266	XYC2+JF16	SCREW	
267	RHD26002	SCREW	
268	RJS9T7ZA	SOCKET(J971)	

Ref. No.	Part No.	Part Name & Description	Remarks

Ref. No.	Part No.	Part Name & Description	Remarks
		PACKING MATERIAL	
P1	RPK0134	GIFT BOX	
P2	RPN0250	PAD	
		ACCESSORIES	
A1	RQT0390-E	INSTRUCTIONS MANUAL	(EB)
A1	RFKSXDT5EG	INSTRUCTIONS MANUAL	(EG)
A2	RJA20ZD-K	POWER CORD	(EG)⚠
A2	RJA86ZB-K	POWER CORD	(EB)⚠
A3	RAK-RX3005W	REMOTE CONTROLLER	
A3A	RKK0008	BATTERY COVER	

Printed in Japan
F900310000HS/KH

ORDER NO. AD9009274T0

Technical Information

INTRODUCTION OF NEW TEST FIXTURE

MODEL : RX-DT5

We extend our sincere thanks for your continured efforts in the sales and servicing of our products.

We would like to inform you that we have developed **EXTENSION CABLES** necessary troubleshooting and alignments of the above model.

Part Number	No. of conductors	Connect from	Connect to
RFKZXDT7	20	CS801	CP801
	20	CS802	CP802
	10	CS702	CP702
	10	CS703	CP703
	7	CS701	CP701

CONNECTION PROCEDURE

To connect the above cables, follow the procedure described below, in conjunction with the Service Manual.

Extension cable parts number: **RFKZXDT7** (consisting of one set of 5 cables).

Components:

- to connect the CD P.C.B. and operation P.C.B.:
  10-pin, 2 cables
  7-pin, 1 cable
- to connect the operation P.C.B. and the relay P.C.B.:
  20-pin, 2 cables

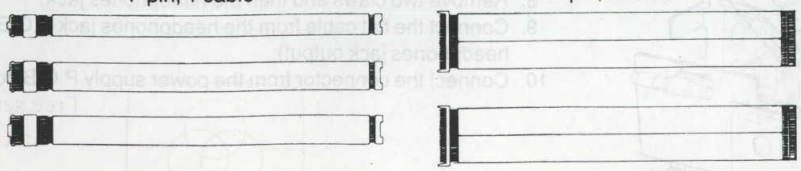

Panasonic®

•How to Connect the Cables to Check the Operation P.C.B.

1. Remove the P.C.B. unit by following the disassembly instructions in Ref. No. 8 in the REMOVAL OF THE P.C.B. UNIT. (See p. 11.)

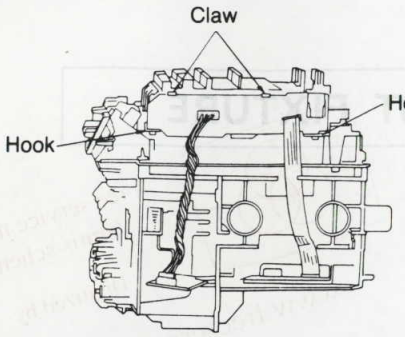

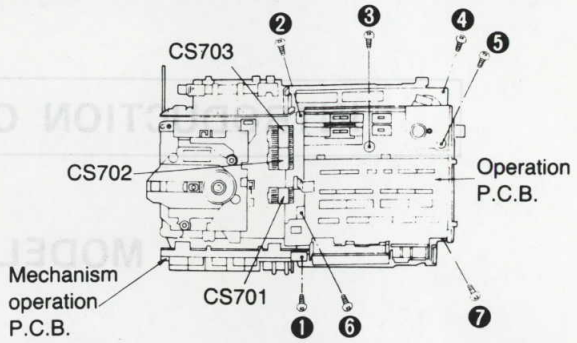

2. Remove two claws and two hooks and then the headphones jack P.C.B.
   •Do not disconnect connector CM604. (for headphones jack output.)

3. Remove three connectors (CS701, CS702 and CS703).
4. Remove seven screws (❶~❼).
5. Remove the operation P.C.B. together with the mechanism operation P.C.B.

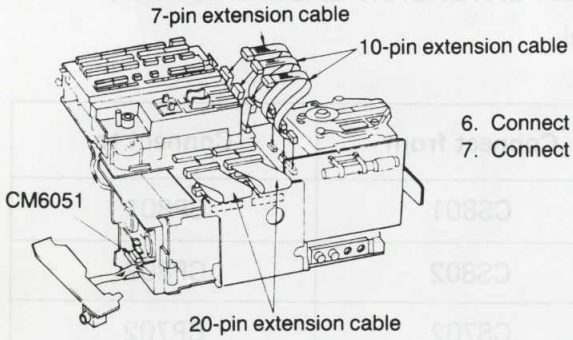

6. Connect the extension cables as shown in the figure on the left.
7. Connect connector CM6051 to CM6052 on the power supply P.C.B. (for power supply).

•How to Connect the Cables to Check the Tuner P.C.B.

1. Remove the P.C.B. UNIT by following the disassembly instructions in Ref. No. 8 in the REMOVAL OF THE P.C.B. UNIT. (See p. 11.)
2. Remove the relay P.C.B. by following the disassembly instructions in Ref. No. 10 in REMOVAL OF THE RELAY P.C.B. (See p. 12.)
3. Remove the tuner P.C.B. by following the disassembly instructions in Ref. No. 11 in REMOVAL OF THE TUNER P.C.B. (See p. 12.)
4. Remove the AF P.C.B. by following the disassembly instructions in Ref. No. 21 in REMOVAL OF THE AF P.C.B. (See p. 14.)

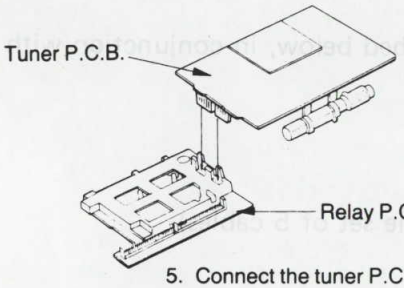

5. Connect the tuner P.C.B. and relay P.C.B.

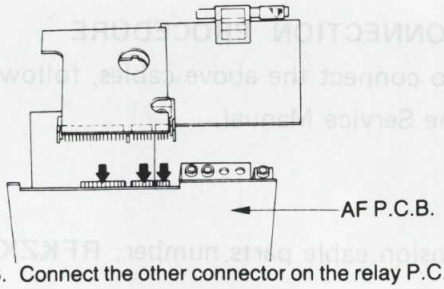

6. Connect the other connector on the relay P.C.B. to the AF P.C.B.

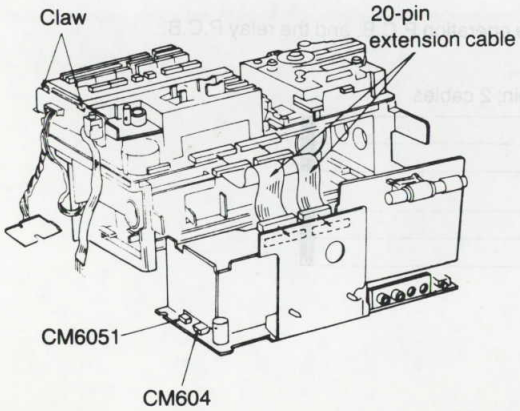

7. Use the 20-pin extension cable to connect the operation P.C.B. and the relay P.C.B.
8. Remove two claws and then the headphones jack.
9. Connect the flat cable from the headphones jack P.C.B. to CM604 (for headphones jack output).
10. Connect the connector from the power supply P.C.B. to CM6051.

Printed in Japan
K901002500 K.ISOMURA