ORDER NO. MD9204011C8

Service Manual

Portable Stereo Component CD System

Radio Cassette

RX-DT610

COMPACT disc DIGITAL AUDIO

MASH* multi-stage noise shaping

Colour

(K)	Black Type

Area

Suffix for Model No.	Area	Colour
(EB)	Great Britain	(K)
(EG)	F.R. Germany & Italy	
(GN)	Oceania	

Tape section: RX-FT510 Mechanism series (SG20W)
CD section: RX-DT55 Traverse deck series (S0DD110)

■ SPECIFICATIONS

General:

Power Requirement:	AC; 230~240 V, 50 Hz Battery; 15 V (10 R20/LR20, UM-1 batteries) Memory Back-up for Computer; 6 V (4 R6/LR6, UM-3 batteries)
Power Consumption:	52 W (AC only)
Power Output:	30 W × 2 ...PMPO
Speakers:	12 cm (5") × 2 (2.7Ω) 1.5 cm (0.5") × 2 (HIGH)
Jacks:	
Input:	MIC; 5mV (200~600Ω)
Output:	HEADPHONES; 32Ω, Ø3.5 SPEAKER; 2~8Ω CD OUT
Dimensions:	641 (W) × 252 (H) × 225 (D) mm (25 1/4" × 9 15/16" × 8 7/8") Main unit; 309 × 252 × 225 mm) (12 3/16" × 9 15/16" × 8 7/8") Speaker box; 170 × 239 × 188 mm (6 11/16" × 9 7/16" × 7 7/16")
Weight:	7.2 kg (15 lbs. 14 oz) without batteries

Disc Player Section:

Sampling Frequency:	44.1 kHz
D-A Conversion:	16-bit linear
Beam Source:	Semiconductor laser (wavelength 780 nm)
No. of Channels:	2 channels, stereo
Frequency Range:	20~20,000 Hz (0, –2 dB)
Dynamic Range:	86 dB
S/N Ratio:	95 dB (1 kHz)
Wow and Flutter:	Unmeasurable

Radio Section:

Frequency Range:	FM1; 87.50~108.00 MHz FM2; 87.50~108.00 MHz LW; 144~288 kHz MW; 522~1611 kHz
Intermediate Frequency:	FM; 10.7 MHz AM; 459 kHZ
Sensitivity:	FM; 12 dB/50 mW output (–3 dB Limit Sens.) MW; 53 dB/m/50 mW LW; 59 dB/m/50 mW

Tape Deck Section:

Frequency Range:	20~14,000 Hz
Recording System:	AC bias
Erasing System:	AC erase
Tape Speed:	4.8 cm/s (1 7/8 ips)
Monitor System:	Variable sound monitor
Track System:	4-track, 2-channel, stereo

***MASH**

- MASH (Multi-Stage Noise Shaping) is an effective oversampling D/A conversion technique which realizes a high S/N ratio and needs no highly complex manufacturing processes such as a laser trimming.
- MASH is a trademark of NTT (Nippon Telegraph and Telephone Corporation).

Notes:

1. Weights and dimensions shown are approximate.
2. Design and specifications are subject to change without notice.

Panasonic

■ CONTENTS

CAUTION:
THIS PRODUCT UTILIZES A LASER.
USE OF CONTROLS OR ADJUSTMENTS OR PERFORMANCES OR PROCEDURES OTHER THAN THOSE SPECIFIED HERIN MAY RESULT IN HAZARDOUS RADIATION EXPOSURE.

■ PRECAUTION OF LASER DIODE

CAUTION: This product utilizes a laser diode with the unit turned "ON" ,invisible laser radiation is emitted from the pick-up lens .

Wave Length: 780 nm
Maximum output radiation power from pick up: 100 μW/VDE

Laser radiation from the pick-up lens is within safety level ,but take precaution on the followings:

1. Do not disassemble the optical pick up unit ,since radiation from exposed laser diode is dangerous .
2. Do not adjust the variable resistor on the pickup unit .It has already been adjusted .
3. Do not look at the focus lens using optical instruments .
4. It is Not advisable to look at the pick up lens for a long period of time .

ACHTUNG: Dieses produkt enthält eine laserdiode. Im eingeschalteten zustand wird unsichtbare laserstrahlung von der lasereinheit abgestrahlt.

Wellenlänge: 780 nm
Maximale strehlungsleistung der lasereinheit: 100μW/VDE

Die strahlung an der lasereinheit ist ungefafirlich, wenn folgende punkte beachtet werden:

1. Die lasereinheit nicht zerlegen, da die strahlung an der freigelegten laserdiode gefährlich ist.
2. Den werksseitig justierten einstellregler der lasereinreit nicht verstellen.
3. Nicht mit optischen instrumenten in die fokussierlinse blicken.
4. Nicht über längere zeit in die fokussierlinse blicken.

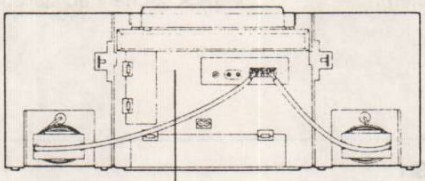

VORSICHT·Unsichtbare Laserstrahlung. wenn Abdeckung geöffnet und Sicherheitsverriegelung überbrückt. Nicht dem Strahl aussetzen.
(Im Inneren des Gerätes)

DANGER·Invisible laser radiation when open and interlock defeated. AVOID DIRECT EXPOSURE TO BEAM.
(Inside of product)

CLASS 1
LASER PRODUCT

LUOKAN 1 LASERLAITE
KLASS 1 LASER APPARAT

ADVARSEL: USYNLIG LASERSTRÅLING VED ÅBNING, NÅR SIKKERHEDSAFBRYDERE ER UDE AF FUNKTION. UNDGÅ UDSÆTTELSE FOR STRÅLING.
(Indersiden at apparatet)

VARO! Avattaessa ja suojalukitus ohitettaessa olet alttiina näkymättömälle lasersäteilylle. Älä katso säteeseen.

VARNING! Osynlig laserstrålning när denna del är öppnad och spärren är urkopplad. Betrakta ej strålen.

RX-DT610

■ LOCATION OF CONTROLS

• CD/GENERAL CONTROLS

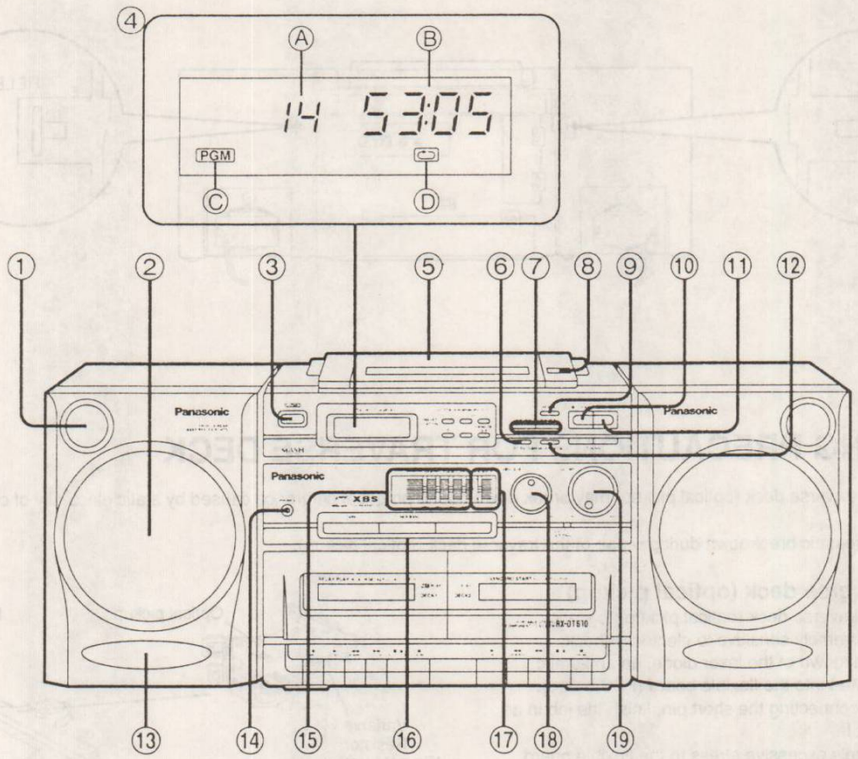

❶ Speakers [Tweeter]
❷ Speakers [Woofer]
❸ Operation switch (OPERATION)
❹ Display section
A : Track display
B : Playing time display
C : Program indicator (PGM)
D : Repeat indicator ( )
❺ Disc holder
❻ Edit pause button (EDIT PAUSE)
❼ Skip/search buttons (⏮ / ◀◀ • ▶▶ / ⏭)
❽ CD eject button (CD EJECT / ⏏)
❾ Repeat button (REPEAT)
❿ Stop/clear button (■ /CLEAR)
⓫ Play/pause button (▶/❚❚)
⓬ Memory/recall button (MEMORY/RECALL)
⓭ Bass reflex ports
⓮ Headphones jack (PHONES)
⓯ Graphic equalizer controls (GRAPHIC EQUALIZER)
⓰ Function select buttons (TAPE • TUNER/BAND • CD)
⓱ Balance Control (BALANCE)
⓲ Extra bass system control (XBS LEVEL)
⓳ Volume control (VOLUME)

• TUNER CONTROLS

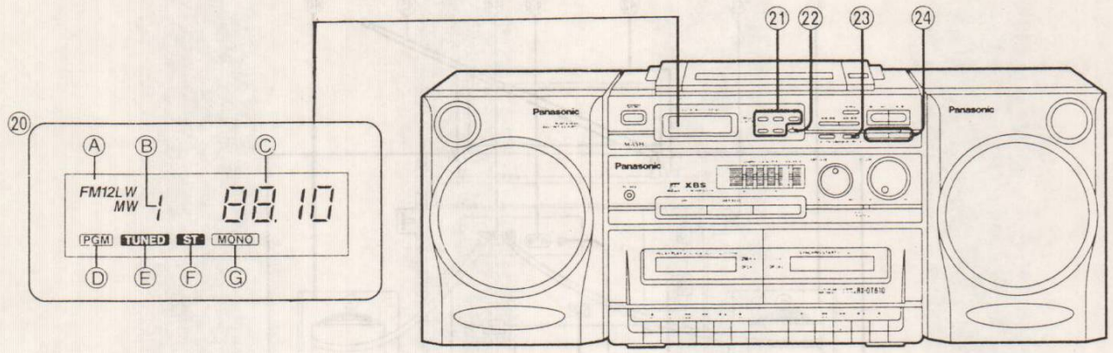

⓴ Display section
A : Band indicators (FM1, FM2, LW, MW)
B : Preset channel display
C : Frequency display
D : Program indicator (PGM)
E : Tuning indicator (TUNED)
F : Stereo indicator (ST)
G : Monaural indicator (MONO)
㉑ Memory channel buttons (PRESET STATION)
㉒ FM mode/beat proof button (FM MODE/B.P)
㉓ Memory/recall button (MEMORY/RECALL)
㉔ Tuning buttons (TUNING)

• DECK CONTROLS

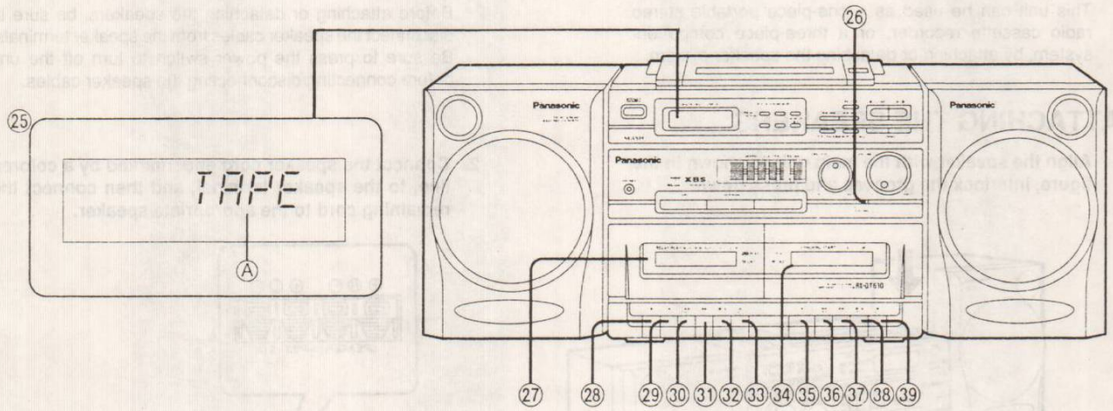

㉕ Display section
A : Tape mode indicator (TAPE)
㉖ Edit recording speed mode selector (EDITING)
㉗ Deck 1 cassette compartment cover
㉘ Record button (REC/ ●)
㉙ Playback button (PLAY/ ▶)
㉚ Rewind/review button (REW/REV/ ◀◀)
㉛ Fast forward/cue button (FF/CUE/ ▶▶)
㉜ Stop/eject button (STOP/EJECT/ ■ / ⏏)
㉝ Pause button (PAUSE/ ❚❚)
㉞ Deck 2 cassette compartment cover
㉟ Playback button (PLAY/ ▶)
㊱ Rewind/review button (REW/REV/ ◀◀)
㊲ Fast forward/cue button (FF/CUE/ ▶▶)
㊳ Stop/eject button (STOP/EJECT/ ■ / ⏏)
㊴ Pause button (PAUSE/ ❚❚)

• REAR PANEL SECTION

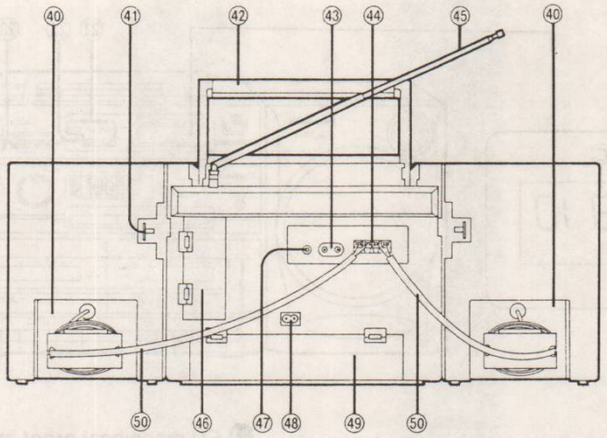

- 40 Speaker cable compartments
- 41 Speaker release levers
- 42 Handle
- 43 CD output jacks (CD OUT)
- 44 Speaker terminals (SPEAKERS)
- 45 Telescopic antenna
- 46 Memory back-up battery compartment cover
- 47 Mixing microphone jack (MIX MIC)
- 48 AC socket (AC IN~)
- 49 Battery compartment cover
- 50 Speaker cables

■ SPEAKER SYSTEM CONNECTIONS

This unit can be used as a one-piece portable stereo radio cassette recorder, or a three-piece component system, by attaching or detaching the speaker system.

Before attaching or detaching the speakers, be sure to disconnect the speaker cables from the speaker terminals. Be sure to press the power switch to turn off the unit before connecting/disconnecting the speaker cables.

• ATTACHING THE SPEAKERS

1. **Align the speaker with the main unit as shown in the figure, interlock the grooves and press down.**

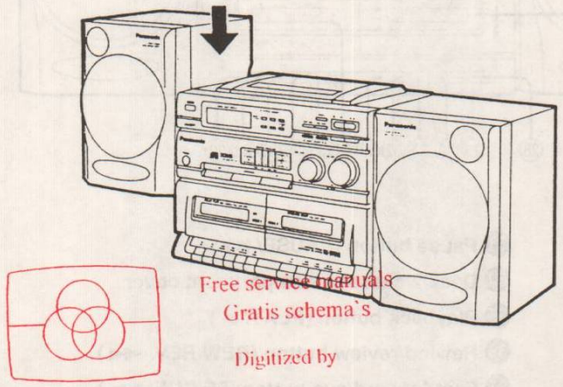

2. **Connect the speaker cord end, marked by a colored line, to the speaker terminal, and then connect the remaining cord to the appropriate speaker.**

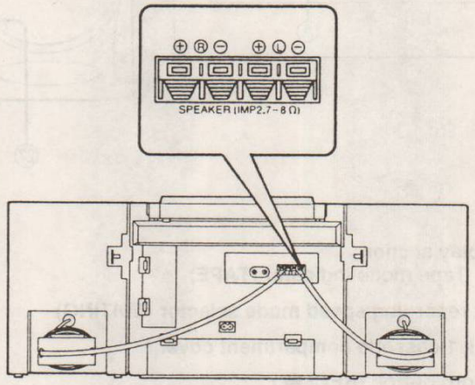

3. **When using the unit with the speakers attached, wind the speaker cables as shown.**
   Since a strong magnet is used for the speaker, keep magnetized commuter passes, tickets or personal credit cards, recorded tapes, watches, etc. away from the set. The speaker magnet in the set may damage them.

• DETACHING THE SPEAKERS

1. **Unlock the speaker release levers by pulling them in the direction shown below, and slide up each speaker.**
2. **Connect the speaker cables to the speaker terminals.**

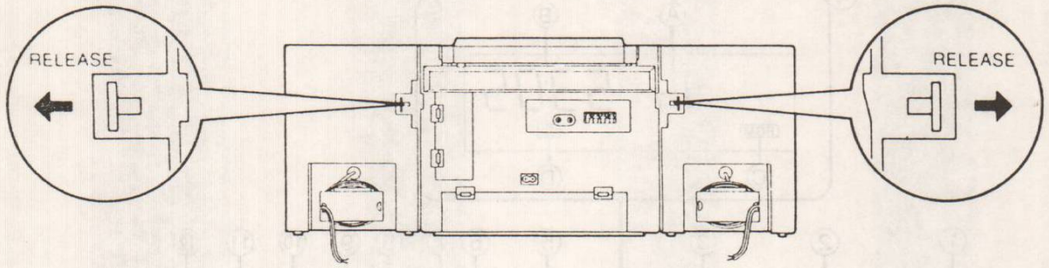

■ HANDLING PRECAUTIONS FOR TRAVERSE DECK

The laser diode in the traverse deck (optical pickup) may break down due to potential difference caused by static electricity of clothes or human body.
So, be careful of electrostatic breakdown during repair of the traverse deck (optical pickup).

•Handling of traverse deck (optical pickup)

1. Do not subject the traverse deck (optical pickup) to static electricity as it is extremely sensitive to electrical shock.
2. To prevent the breakdown of the laser diode, an anti-static shorting pin is inserted into the flexible board (FPC board). When removing or connecting the short pin, finish the job in as short time as possible.
3. Take care not to apply excessive stress to the flexible board (FPC board).
4. Do not turn the variable resistor (laser power adjustment). It has already been adjusted.

•Grounding for electrostatic breakdown prevention

1. Human body grounding
   Use the anti-static wrist strap to discharge the static electricity from your body.
2. Work table grounding
   Put a conductive material (sheet) or steel sheet on the area where the traverse deck (optical pickup) is placed, and ground the sheet.

Caution:
The static electricity of your clothes will not be grounded through the wrist strap. So, take care not to let your clothes touch the traverse deck (optical pickup).

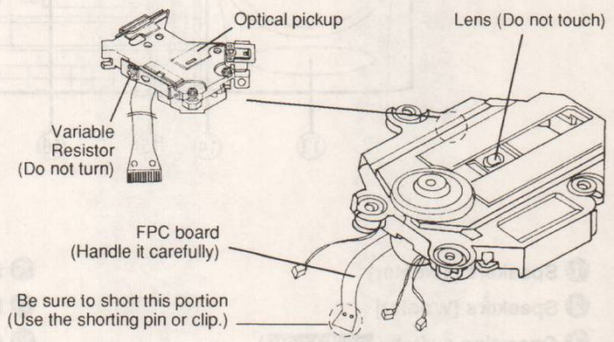

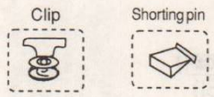

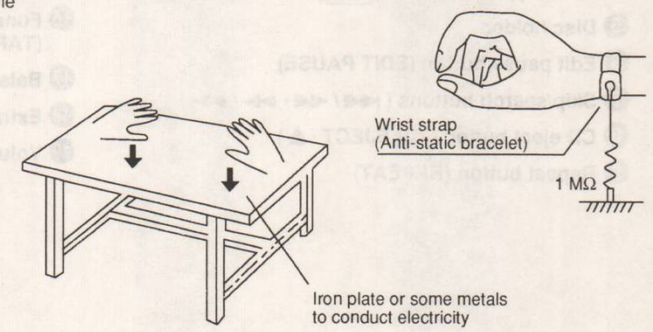

DISASSEMBLY INSTRUCTIONS

Ref. No 1 — Removal of the Front Cabinet

Procedure 1

1. Remove the battery cover.
2. Remove the 8 screws (❶~❽).

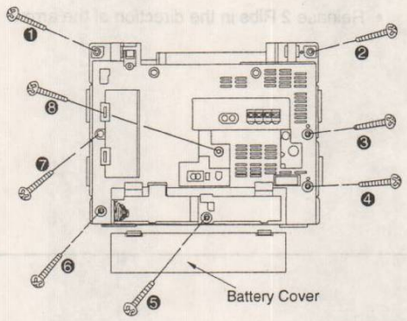

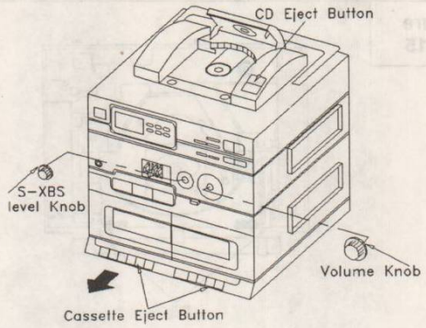

3. Pull out the S-XBS knob and Volume knob.
4. Press the Eject buttons on both tape deck 1 & 2.
5. Remove the front cabinet in the direction of arrow.

Ref. No 2 — Removal of the G. Equalizer P.C.B

Procedure 1 → 2

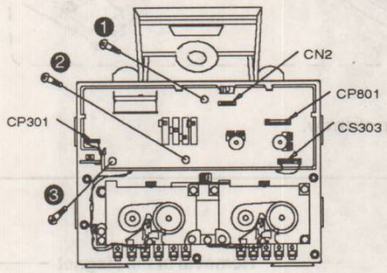

1. Release 4 connectors (CP301, CS303, CP801, CN2).
2. Remove 3 screws (❶ ~ ❸).
3. Remove the G.Equalizer P.C.B.

Ref. No 3 — Removal of Mechanism unit & Mechanism P.C.B

Procedure 1→ 2 → 3

1. Remove the 5 screws (❶~❺).
2. Remove the connectors (CP304, CP305, CS602).
3. Remove the bond & take out the mechanism unit.

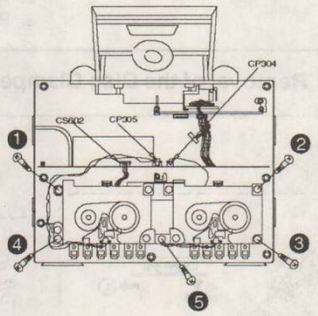

4. Remove solder points on motor terminal.
5. Remove 4 screws (❶~❹).
6. Cut wire-tie.
7. Release the 6 claws.

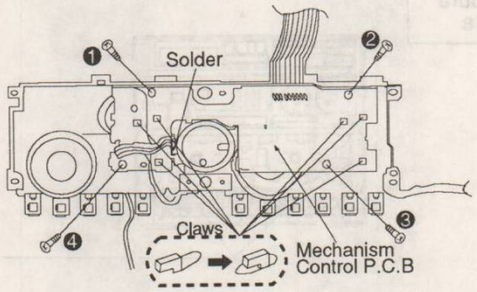

Ref. No 4 — Removal of Main P.C.B

Procedure 1 → 2 →4

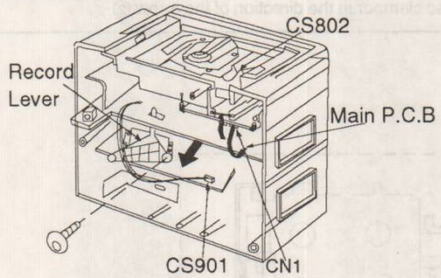

1. Remove CS802 from CD P.C.B.
2. Remove 1 screw from record lever.
3. Remove the lever.
4. Remove connector CS901 from the Power P.C.B.
5. Remove connector CN 1 from Tuner P.C.B.
6. Remove Main P.C.B in the direction of arrow.

Ref. No 5 — Removal of Tuner P.C.B

Procedure 1→ 2 → 5

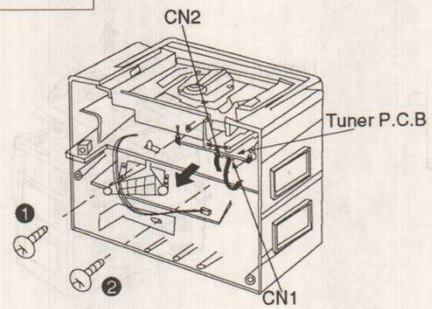

1. Remove 2 screws (❶ & ❷).
2. Remove 2 connectors CN2 & CN1.
3. Remove the Tuner P.C.B in the direction of arrow.

Ref. No 6 — Removal of Power P.C.B

Procedure 1→3→4→6

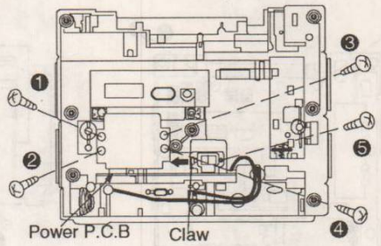

1. Remove 5 screws from transformer.
2. Remove the transformer shield plate.
3. Release the claw in the direction of arrow.
4. Remove the black bond.
5. Pull out the Power Supply P.C.B.

Ref. No 7 — Removal of the Battery Spring

Procedure 1 → 7

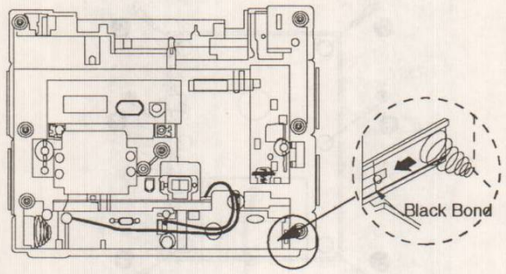

1. Remove the black bond.
2. Release the claw.
3. Pull out the battery spring in the direction of arrow.

Ref. No 8 — Removal of Backup Battery P.C.B

Procedure 1→ 2 → 3→ 4→ 5 → 8

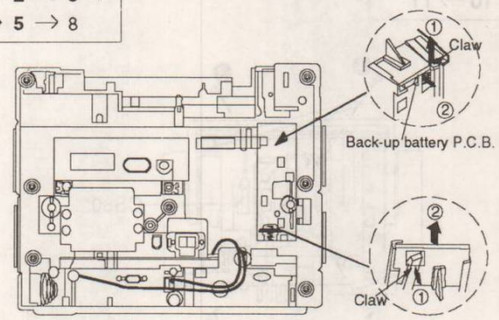

1. Remove the black bond.
2. Release the claw in the direction of arrow ①.
3. Remove the backup battery P.C.B in the direction of arrow ②.

Ref. No 9 — Removal of Battery P.C.B

Procedure 1 → 9

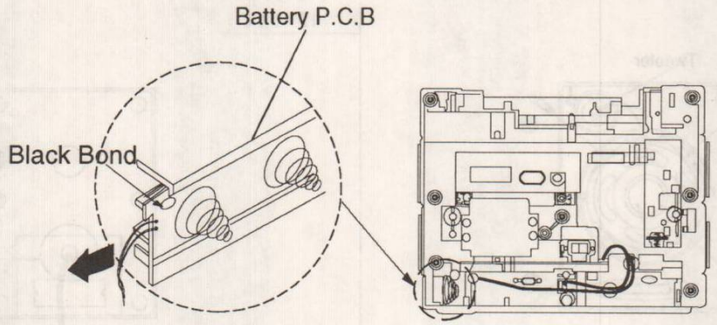

1. Remove the black bond.
2. Pull the battery P.C.B in the direction of arrow.

 RX-DT610

Ref. No 10	Removal of Upper Cabinet
Procedure 10	

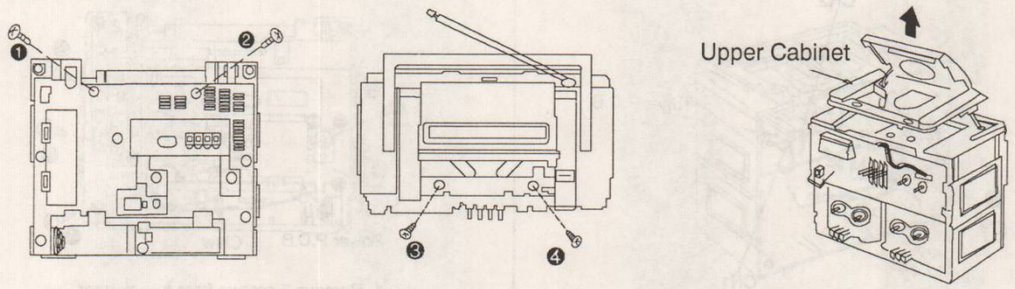

1. Remove 2 screws from back cabinet (❶ & ❷).
2. Press the CD eject button.
3. Remove 2 screws (❸ & ❹).
4. Remove the upper cabinet in the direction of arrow.

Ref. No 11	Removal of Traverse Unit
Procedure 10 → 11	

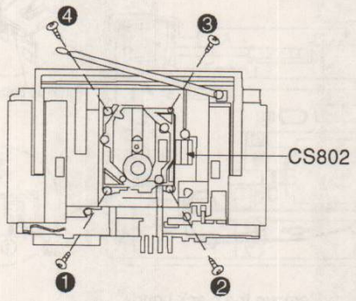

1. Remove 4 screws (❶ ~ ❹).
2. Release the connector CS802.

Ref. No 12	Removal of the Front Speaker Cabinet
Procedure 12	

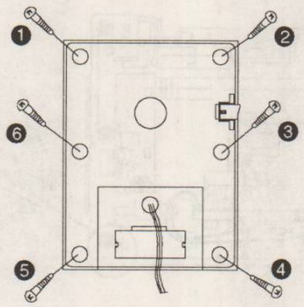

• Remove 6 screws (❶ ~ ❻).

Ref. No 13	Removal of the Woofer Speaker
Procedure 12 → 13	

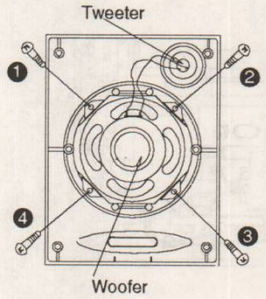

• Remove 4 screws (❶ ~ ❹).

Ref. No 14	Removal of the Bush
Procedure 12 → 14	

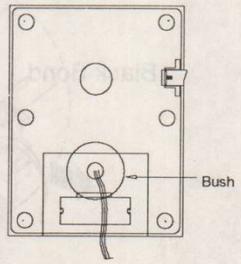

• Pull out the bush.

Ref. No. 15	Removal of the CD cover
Procedure 1→10→15	

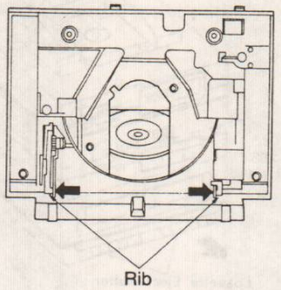

• Release 2 Ribs in the direction of the arrow.

Ref. No. 16	Removal of the CD Eject Button
Procedure 1→10→16	

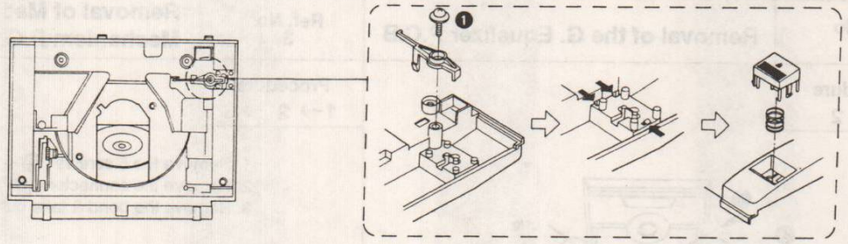

1. Remove the screw (❶).
2. Release 3 claws in the direction of arrow.
3. Remove the CD eject button.

Ref. No. 17	Removal of the Disc Clamper
Procedure 17	

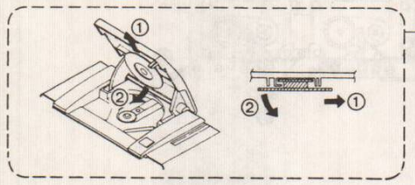

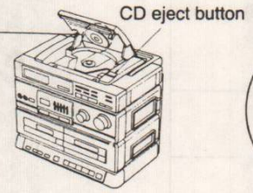

Removal of the Magnet

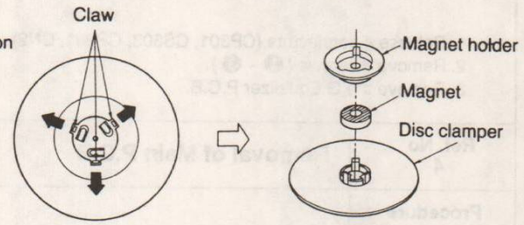

1. Press the CD eject button and then open the CD cover.
2. Slide the disc clamper in the direction of the arrow ① and then remove the disc clamper in the direction of the arrow ②.

Ref. No. 18	Removal of the Cassette Holder
Procedure 1→18	

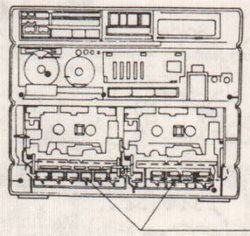

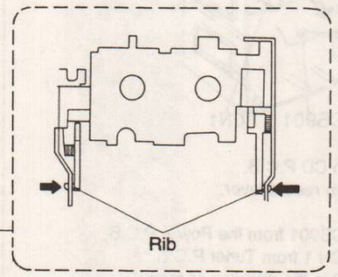

• Release 2 Ribs in the direction of the arrow.

Ref. No 19	Removal of Function Select Button
Procedure 1 → 19	

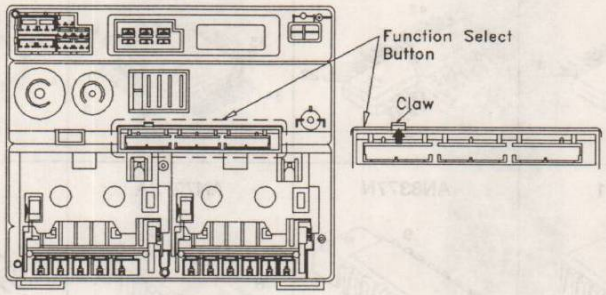

● Release the claw in the direction of arrow.

Ref. No 20	Removal of the Handle
Procedure 20	

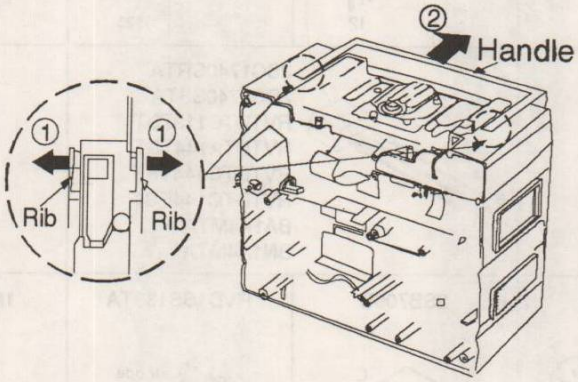

1. Release 4 ribs in the direction of the arrow ① .
2. Remove the handle in the direction of the arrow ② .

● CD Eject Lever Assembly

•CD eject lever assembly

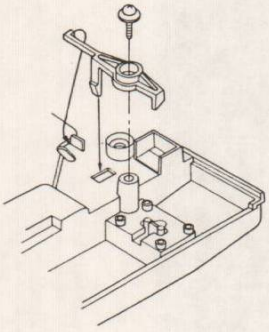

•CD cover assembly

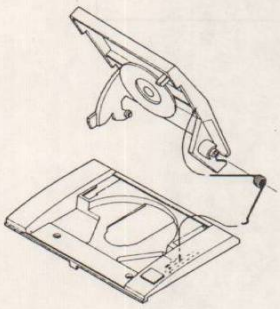

•Cassette holder assembly

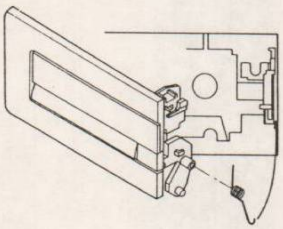

■ WHAT TO DO WHEN THE TAPE IS ENTANGLED

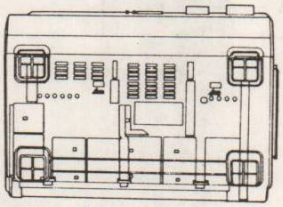

When the tape is caught in the pinch roller, etc. Release the tape by turning the pulley on the motor with the screwdriver in the direction of the arrow.

■ TERMINAL GUIDE OF IC'S, TRANSISTORS AND DIODES

TCA0372DM2R 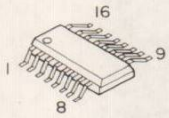 	MN6475 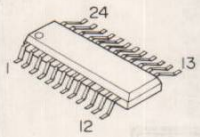 	AN8800SCE2 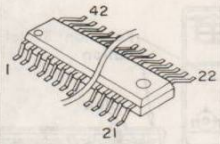 	MN6650 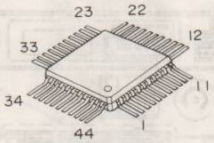 	MN6626 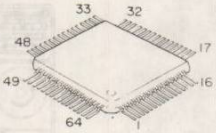 	M37410M6H220 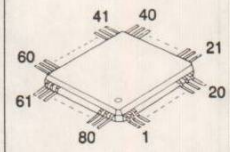
BU4066B 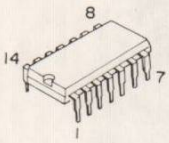 	LM7001 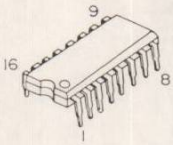 	AN8377N 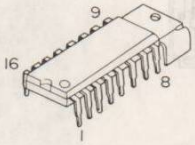 	AN7273A 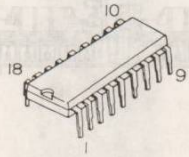 	BA3310N 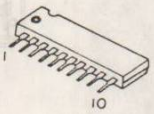 	BA3416BL 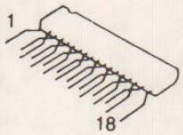
RVIBA1332L 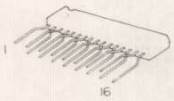 	BA3822LS-M  	BA3920 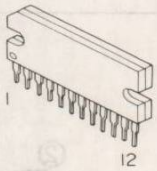 	AN7134N-R 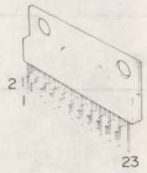 	S8054HN-T S81250PG-T 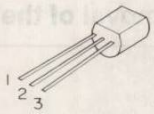 	2SK301QTA 
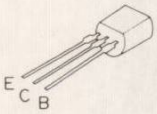 	2SA564RTA 2SC829BTA 2SC1684RTA 2SC2001KTA 2SC2001L1TA	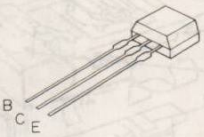 	2SC1740SRTA 2SC1740SSTA RVTDTC113ZST RVTDTA144TST RVTDTC144TST RVTDTC144EST BA1A4MTA BN1A4MTA	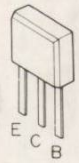 	BN1L3NTA 2SC2784FTA 2SC2785FTA 2SC2786MTA
2SK544F-AC 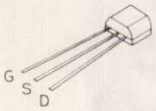 	2SB1185E 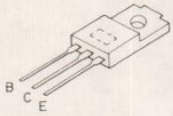 	2SB709S 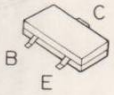 	RVD1SS133TA 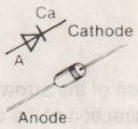 	1N5402BM21 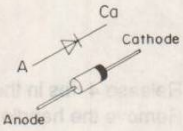 	1SV147T4MATU 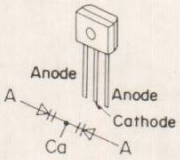
RVDSVC321 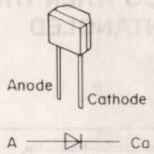 	MA110TW 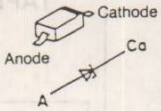 	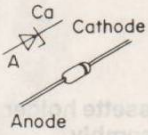 	RVDMTZ5R1BTA RVDMTZ5R6BTA RVDMTZ6R2BTA RVDMTZ6R8BTA RVDMTZ7R5BTA RVDMTZ10BTA RVDMTZ11BTA		

RX-DT610 RX-DT610

■ SCHEMATIC DIAGRAM

•TUNER AND CD CIRCUIT

: CD Signal Line : FM Signal Line : FM OSC Signal Line : AM OSC Signal Line : FM/AM Vcap Control Signal Line : +B Line

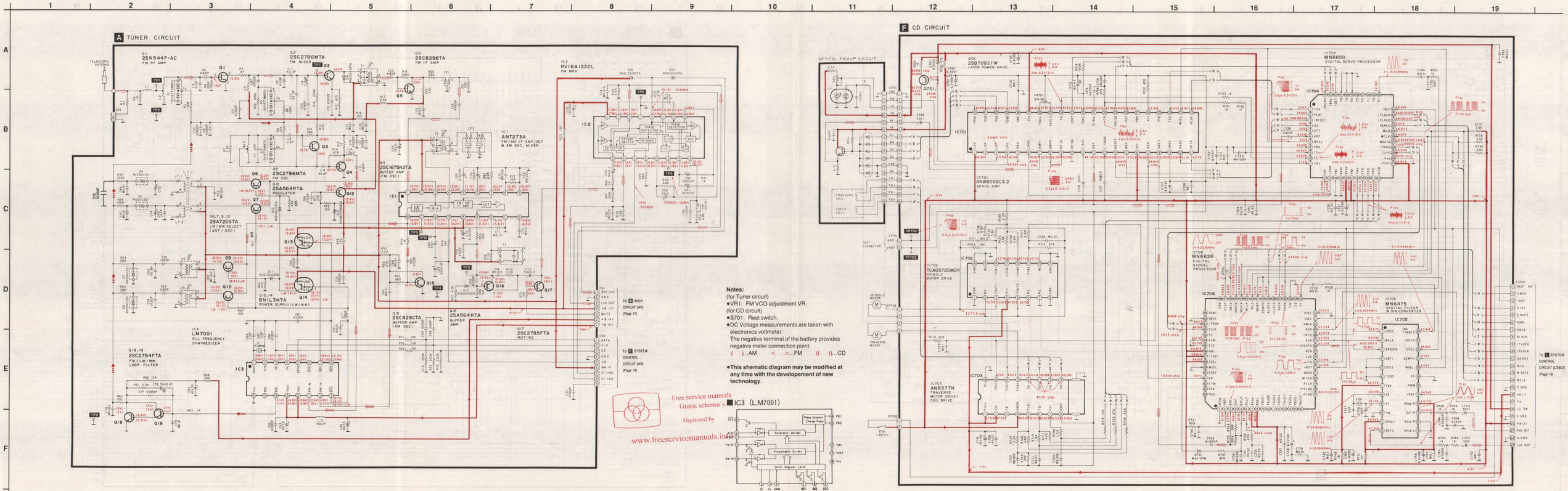

Notes:
(for Tuner circuit)
•VR1: FM VCO adjustment VR.
(for CD circuit)
•S701: Rest switch.
•DC Voltage measurements are taken with electronics voltmeter.
The negative terminal of the battery provides negative meter connection point.
( )...AM < >...FM (( ))...CD

•This shematic diagram may be modified at any time with the developement of new technology.

■ IC3 (LM7001)

RX-DT610 RX-DT610

■ SCHEMATIC DIAGRAM (G.EQ, Main, Power, Mecha Circuit)

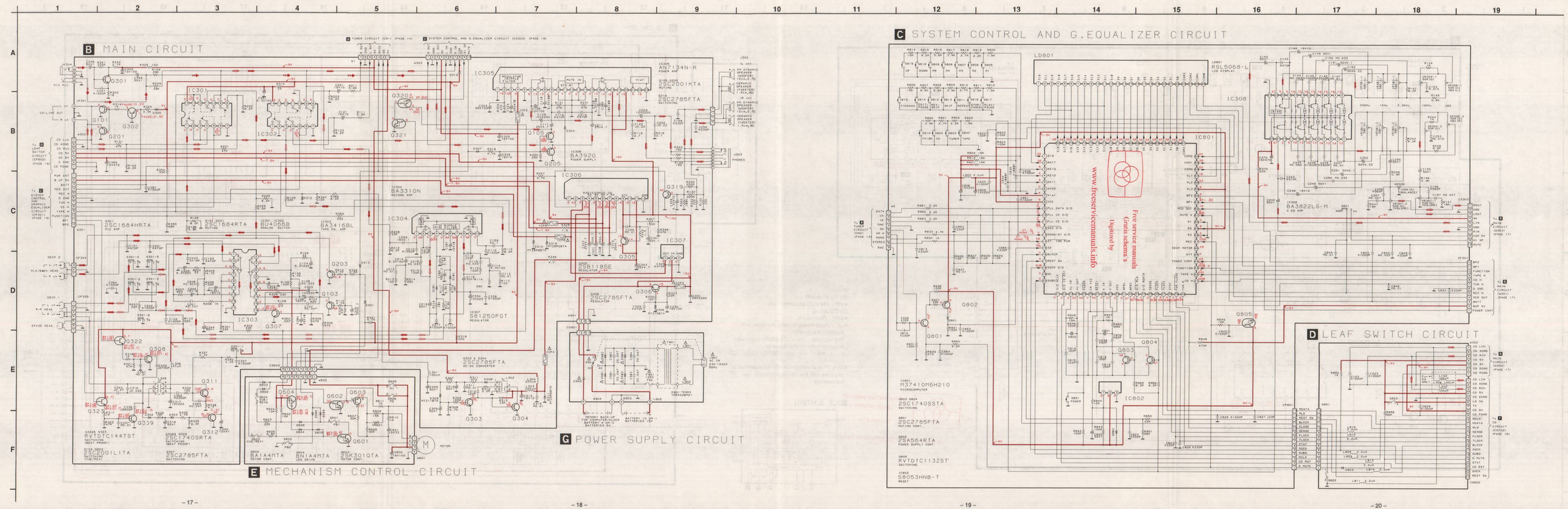

Notes :

- S301-1 ~ S301-6 : Record/Playback switch in "PLAYBACK" position. (R...RECORD, P...PLAYBACK).
- S601 : Deck 1 tape playback switch.
- S602 : Deck 2 tape playback switch.
- S603 : Deck 1 fastwind select switch.
- S604 : Deck 2 fastwind select switch.
- S605 : Deck 1 motor switch.
- S606 : Deck 2 motor switch.
- S801 : Power switch. (POWER)
- S802 : Function select switch. (TAPE)
- S803 : Function select switch. (TUNER)
- S804 : Function select switch. (CD)
- S805 : Preset station select switch. (STATION 1)
- S806 : Preset station select switch. (STATION 2)
- S807 : Preset station select switch. (STATION 3)
- S808 : Preset station select switch. (STATION 4)
- S809 : Preset station select switch. (STATION 5)
- S810 : FM mode and beat proof switch. (FM/BP)
- S811 : CD repeat switch. (REPEAT)
- S812 : CD skip and search switch. (▶▶▌)
- S813 : CD skip and search switch. (▌◀◀)
- S814 : Edit pause switch. (EDIT PAUSE)
- S815 : Memory and recall switch. (MEMORY/RECALL)
- S816 : CD stop and clear switch. (■ /CLEAR)
- S817 : CD play and pause switch. (▶ /❚❚)
- S818 : Tuning switch. (-)
- S819 : Tuning switch. (+)
- S821 : Edit select switch. (NOR/HIGH)
- S823 : CD cover open/close detect switch.
- S901 : AC/DC select switch in "AC" position.
- VR301 : Graphic Equalizer VR (330Hz).
- VR302 : Graphic Equalizer VR (1KHz).
- VR303 : Graphic Equalizer VR (3.3KHz).
- VR304 : Graphic Equalizer VR (10KHz).
- VR305 : Balance control VR (BALANCE)
- VR306 : S-XBS control VR.
- VR307 : Volume control VR.(VOLUME)
- VR 601 : Tape speed adjustment VR.
- DC voltage measurement are taken with electronic voltmeter. The negative terminal of the battery provides negative meter connection point.

: Tuner Signal Line
: CD Signal Line
: Tape Playback Signal Line
: AF Signal Line
: Recording Signal Line
: +B Line
: MIC. Signal Line

No mark ...TAPE PLAYBACK (DECK2)
<< >> ...HIGH SPEED EDITING
[ ] ...TAPE RECORDING
▭ ...MUTING

- Battery Current :

Vol.min	144mA	(AM)	Vol.max	900mA	(AM)
	146mA	(FM)		740mA	(FM)
	205mA	(PLAYBACK)		1.24A	(PLAYBACK)
	269mA	(RECORDING)		1.36A	(RECORDING)
	490mA	(CD)		1470mA	(CD)

Measurement instruction
(AM:74dB/m 30%Mod
FM: 60dB 30%Mod
TAPE: 315Hz, 0dB
CD: 1kHz, 0dB)

- Important Safety Notice:
  Component identified by ⚠ mark have special characteristics important for safety.
  When replacing any of these components ,use only manufacturer's specified parts.

- **This schematic diagram may be modified at any time with the development of new technology.**

■ INTERNAL CONNECTIONS OF LCD (LIQUID CRYSTAL DISPLAY)

LD801(RSL5068-L)

• COMMON

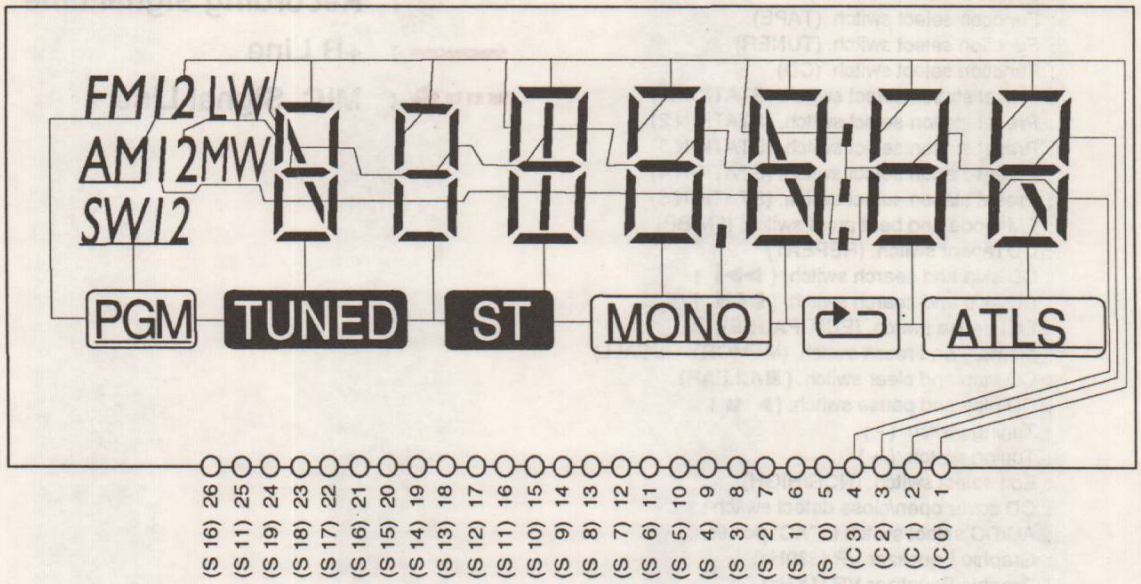

• SEGMENT

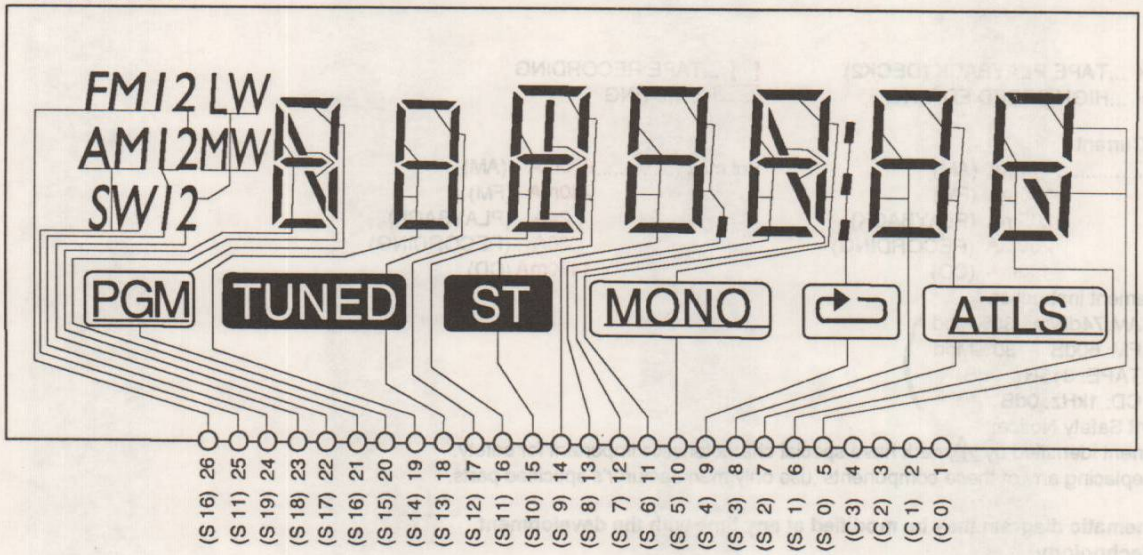

■ CIRCUIT BOARD DIAGRAM

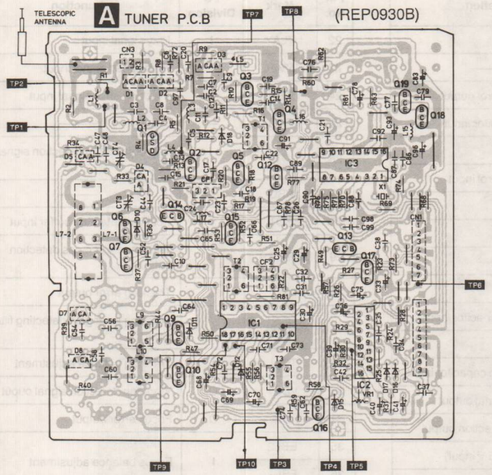

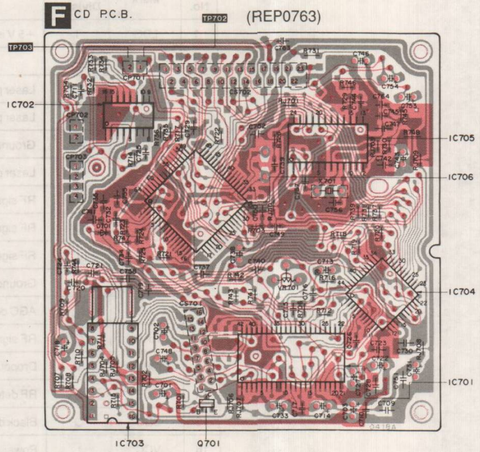

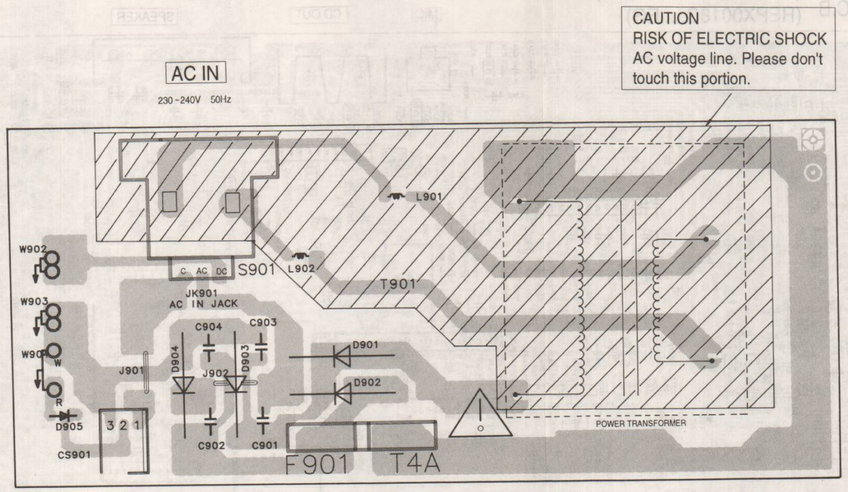

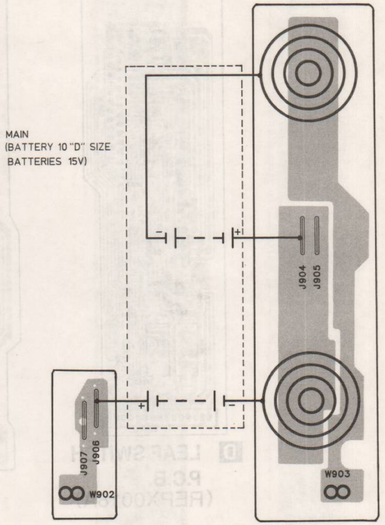

G POWER SUPPLY P.C.B (REPX0019B)

E MECHANISM CONTROL P.C.B (REPX0028A)

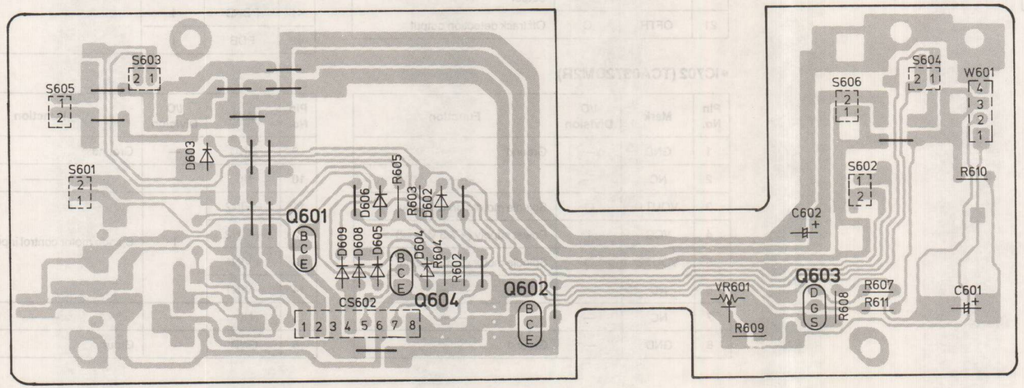

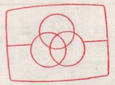

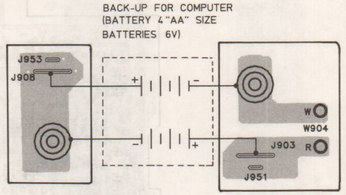

Notes:
1. The circuit shown in ( ) on the conductor indicates printed circuit on the back side of the printed circuit board.
2. The circuit shown in ( ) on the conductor indicates printed circuit on the front side of the printed circuit board.
3. The symbols (●) shown in the circuit board indicate connection points between conductors on the front side and back side of the circuit board.

●The circuit board diagram may be modified at any time with the development of new technology.

■ CIRCUIT BOARD DIAGRAM

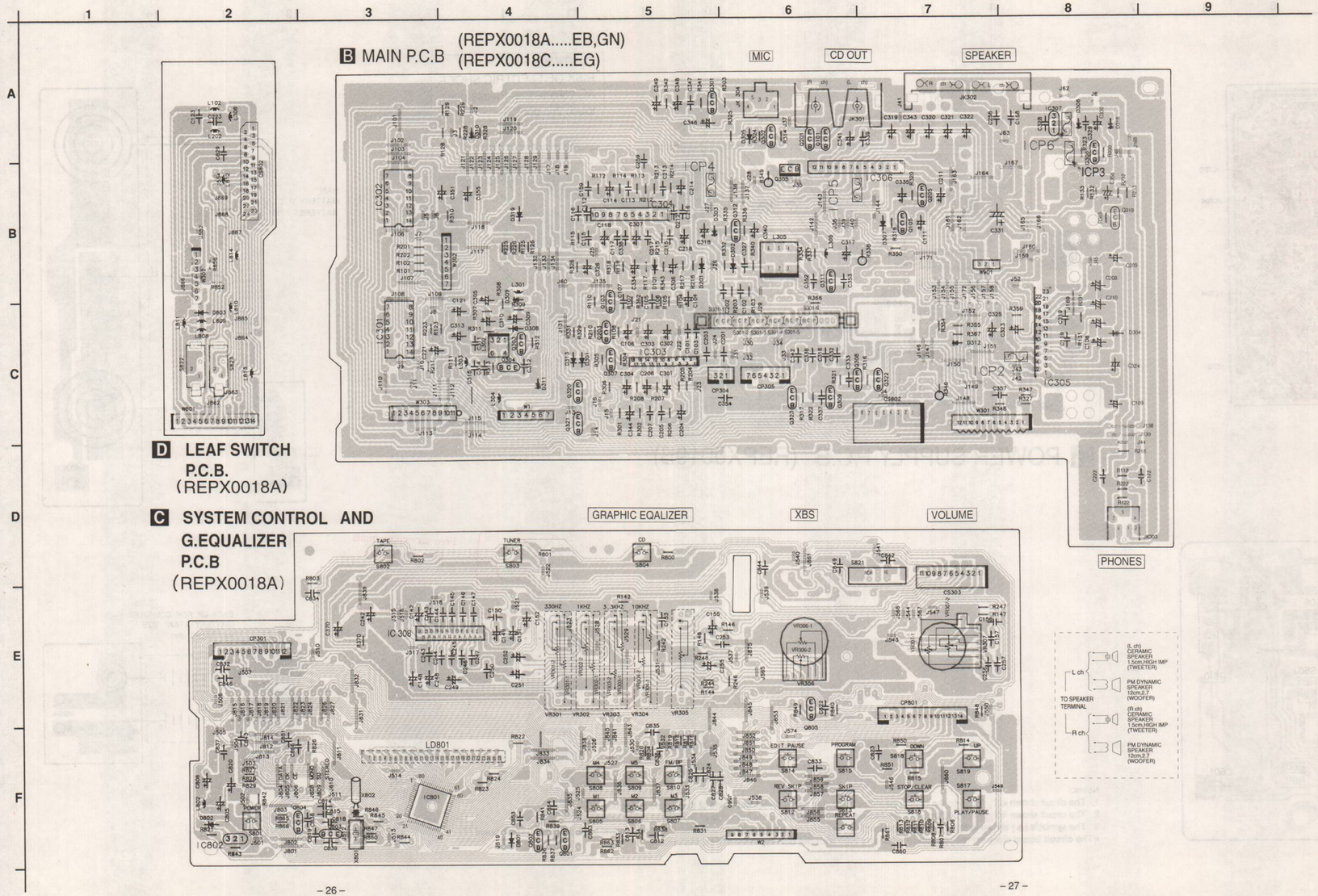

■ FUNCTION OF IC TERMINALS

•IC 701 (AN8800SCE2)

Pin No.	Mark	I/O Division	Function
1	LDG	I	+5 V input
2	LDP	—	——
3	LD	O	Laser power control output
4	LPD	I	Laser power monitor input
5	GND	—	Ground terminal
6	LDON	I	Laser power control input
7	AMPI	I	RF signal input
8	AMPO	O	RF signal output
9	RFIN	I	RF signal input
10	RFEQ	—	Ground
11	C.AGC	I	AGC detecting capacitor input
12	ARF	O	RF signal output
13	C.SBDO	I	Dropout detecting capacitor input
14	RFDET	O	RF detections signal output
15	BDO	O	Black dropout detection output
16	VCC	I	Power supply (+5 V input)
17	SDO	O	System dropont detection output
18	VAD+	O	A/D converter reference voltage output
19	VREF	O	Reference voltage output
20	VAD−	O	A/D converter reference voltage output
21	OFTR	O	Off track detection output
22	PLAY	I	Play signal input
23	WVEL	I	High speed signal input
24	TES	I	Tracking error signal input
25	PTO	—	——
26	PTI	I	Traverse speed detection signal input
27	PBO	—	——
28	POT	I	Position detecting buffer input
29	CROSS	O	Tracking error cross detection output
30	TE	O	Tracking error output
31	TEBAL	I	Tracking error gain detecting filter input
32	TBAL	I	Tracking balance adjustment
33	VDET	O	Vibration detection signal ouput
34	FE	O	Focus error output
35	EBL2	I	Focus balance adjustment
36	FBL1		
37	VCC	I	Power supply (+5 V input)
38	GND	—	Ground
39	PDBD	I	Photo detector current input
40	PDA	I	
41	PDAD	I	
42	PDB	I	

•IC702 (TCA0372DM2R)

Pin No.	Mark	I/O Division	Function
1	GND	—	Ground
2	NC	—	——
3	VOUT1	O	Spindle motor control output
4	VCC	I	Power supply (+7.5 V input)
5	VOUT2	O	Spindle motor control output
6	NC	—	——
7	NC	—	——
8	GND	—	Ground
9	GND	—	Ground
10	NC	—	——
11	−VIN2	I	Spinde motor control input
12	+VIN2		
13	+VIN1		
14	−VIN1		
15	NC	—	——
16	GND	—	Ground

RX-DT610

RX-DT610

•IC703 (AN8377N): Motor Dirve

Pin No.	Mark	I/O Division	Function
1	PVCC	I	Driver power supply (+8.9 input)
2	VCC	I	Power supply (+8.9 V input)
3	TB	O	External transistor base driving output
4	VMON	O	Voltage output
5	TVDI	I	Traverse error signal input
6	FDI	I	Focus error signal input
7	TDI	I	Tracking error signal input
8	VREF	I	Reference voltage input
9	TD−	O	Inverting output of tracking driver
10	TD+	O	Non-inverting output of tracking driver
11	FD−	O	Inverting output of focus driver
12	FD+	O	Non-inverting output of focus driver
13	TVD−	O	Inverting output of traverse driver
14	TVD+	O	Non-inverting output of traverse driver
15	RESET	O	Reset signal output
16	PC	I	PC input (connect to GND)

•IC706 (MN6626)

Pin No.	Mark	I/O Division	Function
1	AVSS	—	Ground
2	IREF	I	Reference current input
3	ARF	I	RF signal input
4	DRF	I	DSL bias input
5	DSLF	O	DSL loop filter
6	PLLF	I	PLL loop filter
7	AVDD	I	Power supply (+5 V input)
8	RSEL	I	+5 V input
9 ~ 16	TBUS7 ~ TBUSO	—	Test terminal (Ground)
17	FLAG	—	——
18	IPFLAG		
19	FCLK		
20	BTYCK		
21	WDCK		
22	/RST	I	Reset signal input
23	TX	O	Digital audio interface signal output
24	LDG	—	——
25	RDG		
26	SRDATA	O	Serial data output
27	SCK	O	Serial bit clock output
28	LRCK	O	Clock output
29	XCK	O	Clock output (f=16.9344 MHz)
30	PMCK	—	——
31	CSEL	I	+5 V input
32	PSEL	—	Ground
33	×1	I	Clock input (f=16.9344 MHz)
34	×2	—	——
35	VSS	—	Ground
36	SUBQ	O	Sub-code (Q data) output
37	SQCK	I	Sub-code (Q data) clock input f=7.3 kHz
38	/CLDCK	—	——
39	BLKCK	O	Sub-code block (Q data) clock f=75 Hz
40	DEMPH	O	De-emphasis ON signal output
41	MEMP	I	Enphasis signal input
42	MLD	I	Command load signal input
43	MCLK	I	Command clock signal input
44	MDATA	I	Command data input
45	DMUTE	I	Muting control signal input
46	SMCK	O	Clock output (f=4.2336 MHz)
47	STAT	O	Status signal output
48	CRC	—	——
49	SUBC	—	——
50	SBCK	I	Clock for sub-code serial output
51	/TRON	I	Tracking servo ON signal input
52	CLVS	O	Spindle servo signal output
53	PC	—	——
54	ECM	O	Spindle motor control signal output
55	ECS	O	Spindle motor control signal output
56	VDD	I	Power supply (+5 V input)
57	/TEST	I	+5 V input
58	SSEL	I	+5 V input
59	MSEL	—	——
60	RESY	—	——
61	DO	I	Drop out signal input
62	EFM	—	——
63	PCK		
64	PDO		

•IC704 (MN6650)

Pin No.	Mark	I/O Division	Function
1	TES	O	Tracking error signal output
2	PLAY	O	Play signal output
3	RFDET	I	RF detection signal input
4	DO	I	Dropout signal input
5	OFT	I	Off track signal input
6	ARF	I	RF signal input
7	WVEL	O	High speed status signal output
8	PBO	I	Potension buffer signal input
9	TE	I	Tracking error signal input
10	FE	I	Focus error signal input
11	VR2	I	A/D reference voltage input
12	VR1	I	A/D reference voltage input
13	LDON	O	Laser power control signal output
14	VSS	—	Ground
15	AVSS	—	Ground
16	AVDD	I	Power supply (+5 V input)
17	VDD	I	Power supply (+5 V input)
18	TRV	O	Traverse servo control output
19	VTD	O	Traverse drive output
20	FOD	O	Focus drive output
21	TRD	O	Tracking drive output
22	KICK	O	Track kick signal output
23	/TEST	I	+5 V input
24	VSS	—	Ground
25	CLVS	I	Spindle servo signal input
26	/TRON	O	Tracking servo signal output
27	MDATA	I	Command data input
28	MCLK	I	Command clock signal input
29	MLD	I	Command load signal input
30	SENSE	O	Sense signal output
31	/FLOCK	O	Focus servo signal output
32	/TLOCK	I	Tracking servo signal output
33	/RST	I	Reset signal input (L: Reset)
34	XI	I	Clock input (fXI=16.9344 MHz)
35	TO	—	Open
36	T1		
37	T2		
38	T3		
39	T4	—	Ground
40	T5		
41	T6		
42	VDET	I	Vibration detecting signal input
43	TBAL	O	Tracking balance adjustment output
44	TRCRS	I	Track cross signal input

•IC705 (MN6475)

Pin No.	Mark	I/O Division	Function
1	LRCK	I	Clock input
2	BCLK	I	Serial data bit clock input
3	SRDATA	I	Serial data input
4	COT1	—	Ground
5	COT2		
6	TEST		
7	VDD	I	Power supply (+5 V input)
8	X2	—	Clock (f=33.8688 MHz)
9	X1		
10	VSS	—	Ground
11	AVDDL	I	Power supply (+5 V input)
12	OUT.L	O	AF signal output (Lch)
13	AVSS.L	—	Ground
14	AVSS.R	—	Ground
15	OUT.R	O	AF signal output (Rch)
16	AVDD.R	I	Power supply input
17	/RST	I	Reset signal input
18	PWM	—	——
19	TP	—	Ground
20	WVEL	I	High speed status signal input
21	DEMPH	I	De-emphasis signal input
22	CSEL	I	+5 V input
23	192FS	—	——
24	768FS	O	Clock output (f=16.9344 MHz)

•IC801 (M37410M6H220)

Pin No.	Mark	Function
1	S19	LCD segment signal ouput
2	BATT	Battery state signal input
3 ~ 5	KEY3 ~ KEY1	Key source
6	AVSS	GND
7	VREF	A/D converter reference voltage (GND)
8	VCC	Power supply (+5V)
9	PLL DATA	PLL tuner data signal output
10	PLL CK	PLL tuner clock signal output
11	PLL CE	PLL tuner strove signal output
12	SW2	————
13	MONO/ST	Tuner stereo/mono select signal ouput
14	ST. IND	Tuner stereo signal input
15	SD	Auto-stop signal detect input
16	BLKCK	CD subcode block clock signal input
17	RESET SW	Reset switch (S701) signal input
18	SQCK	CD subcode clock output
19	NC	————
20	SUBQ	CD subcode data input
21	MCLK	CD signal process IC control signal output
22	CD RST	CD reset signal output
23	XeIN	Clock input (32.7KHz)
24	XeOUT	Clock output (32.7KHz)
25	POWER	Main switch control signal input
26	CNVSS	GND
27	RESET	Power on reset signal input
28	XIN	Clock input
29	XOUT	Clock output
30	VSS	GND
31	MPB1	Microprocessor beat proof 1
32	MPB2	Microprocessor beat proof 2
33	MLD	CD signal process strove signal output
34	MDATA	CD signal process IC data output
35	SENSE	CD sense signal input
36	FLOCK	CD focus lock signal input
37	TLOCK	CD tracking signal input
38	STAT	CD status signal input
39	CLOSE	CD cover open/close detection signal input
40	TUN H	Input selector control signal output (TUNER)
41	CD H	Input selector control signal output (CD)
42	TAPE H	Input selector control signal output (TAPE)
43	FUNCTION	Power supply control signal output
44	POWER CONT	Power AMP control signal output
45	ATT	————
46	DECK MOTOR	————
47	REC	REC detecting signal input
48 ~ 50	R3 ~ R1	Region select signal input
51	MUTE A	AF muting signal output
52	MCD OUT	CD line out control (Muting)
53	BP1	Beat proof
54	BP2	Beat proof
55	VL3	LCD bias reference voltage V3
56	VL2	LCD bias reference voltage V2
57	VL1	LCD bias reference voltage V1
58 ~ 61	COM0 ~ COM3	LCD common signal output
62 ~ 80	S0 ~ S18	LCD segment signal output

■ BLOCK DIAGRAM OF CD CIRCUIT

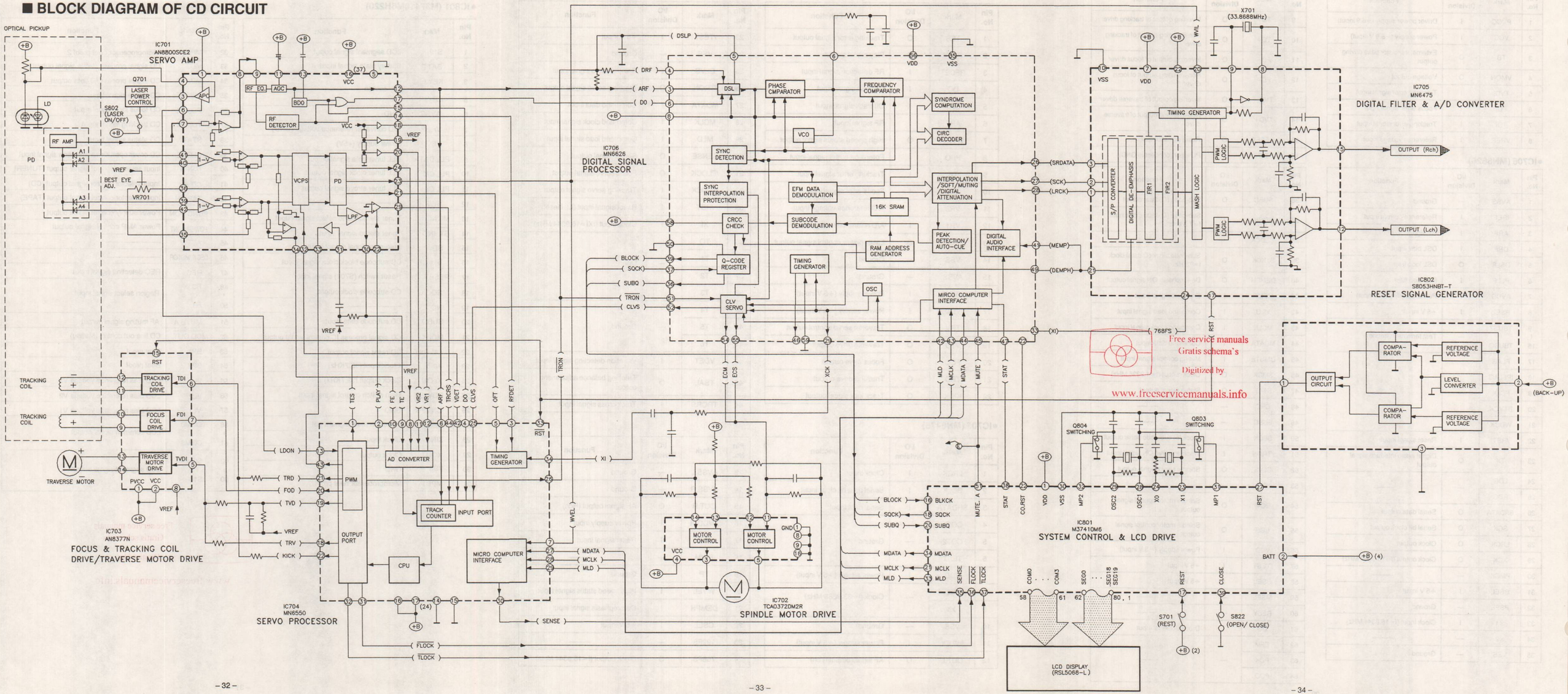

■ BLOCK DIAGRAM

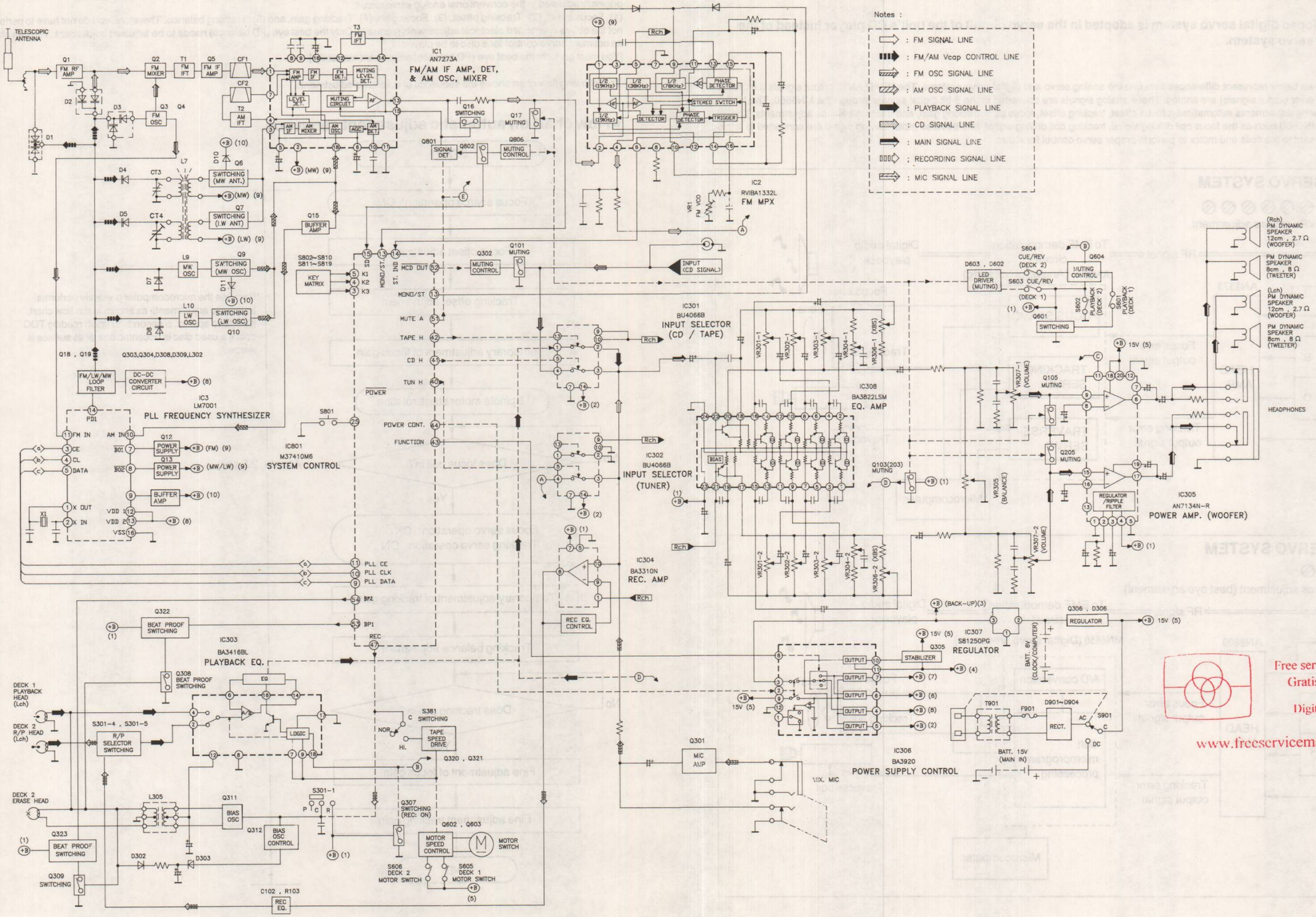

■ DIGITAL SERVO SYSTEM

The newly-developed digital servo system is adopted in the servo circuit of the unit's CD player instead of the ordinary analog servo system.

1. The diagrams shown below represent differences between the analog servo and digital servo systems. The HEAD AMP. output signals (i.e., focus error and tracking error output signals) are analog. These analog signals are converted to the 8-bit digital signals through the MN6650. The MN6650 performs the following adjustments automatically; focus offset, tracking offset, focus gain, tracking gain, and tracking balance adjustments. The outputs from the MN6650 such as the focus coil driving signal, tracking coil driving signal, and traverse motor driving signal are converted to analog signals again and sent to the coils and motor to perform proper servo control for a disc.

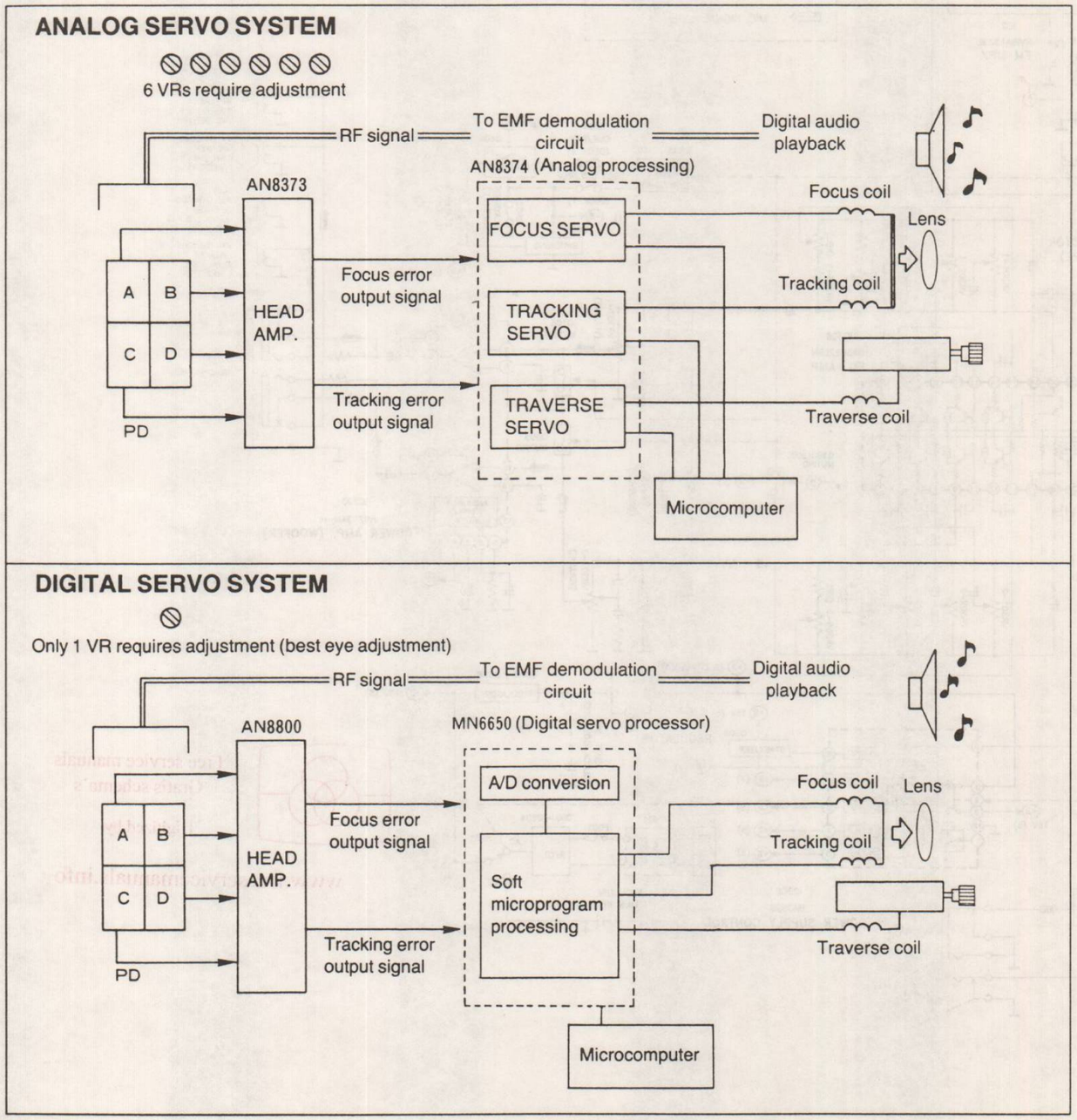

2. The servo processor IC MN6650 of the newly-developed digital servo circuit automatically performs the following adjustments which were originally adjusted in the conventional analog servo circuit:
(1) Focus offset, (2) Tracking offset, (3) Focus gain, (4) Tracking gain, and (5) Tracking balance. Therefore, you do not have to perform not the above-mentioned electrical adjustments manually. Only the best eye (PD balance) needs to be adjusted adjustment. You can obtain an optimum servo control for a disc to be played.
[You must perform the best eye (PD balance) adjustment manually.]

The following flow chart shows the sequence of automatic adjustments.

•Flow chart on automatic adjustment sequence

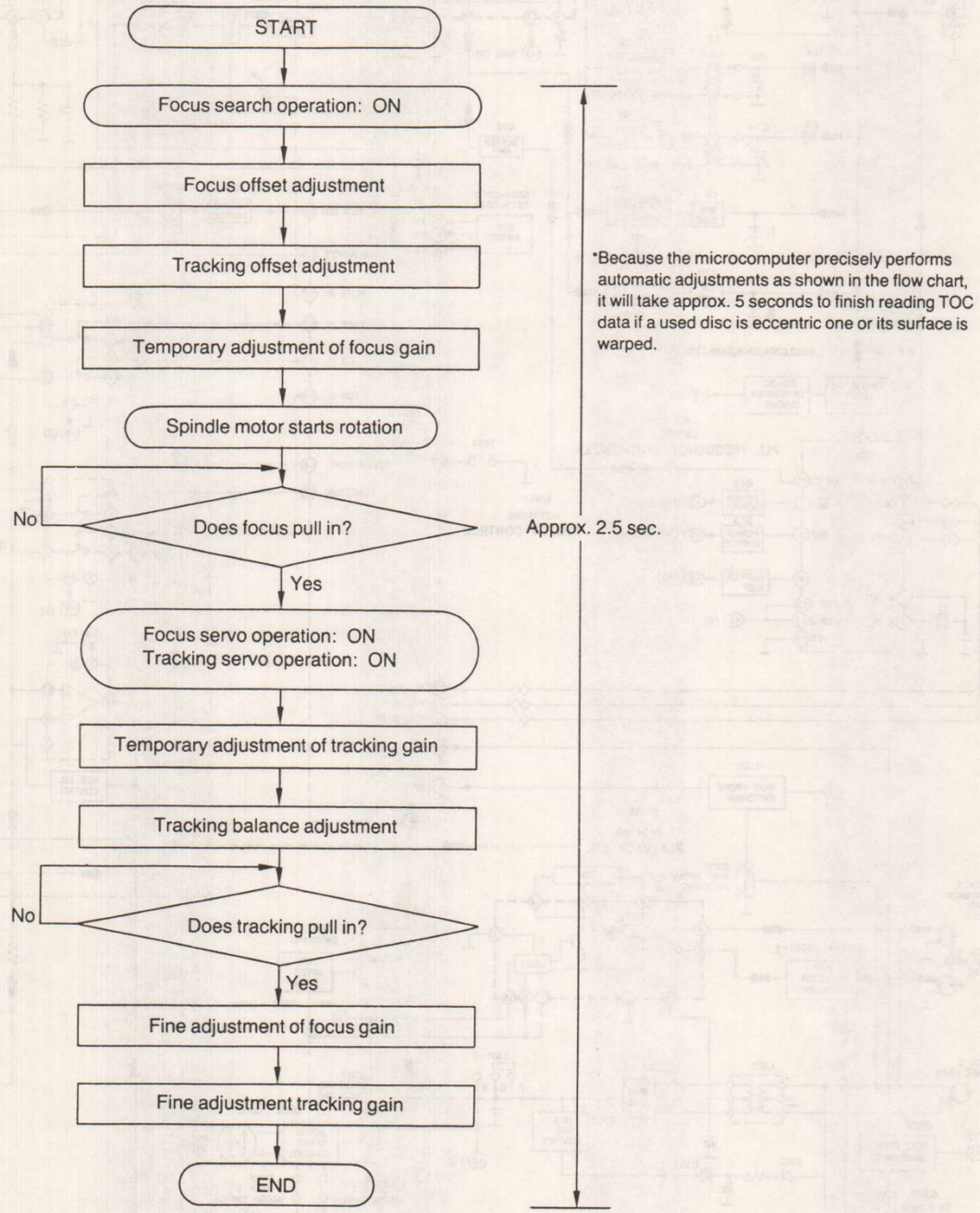

■ WIRE CONNECTION DIAGRAM

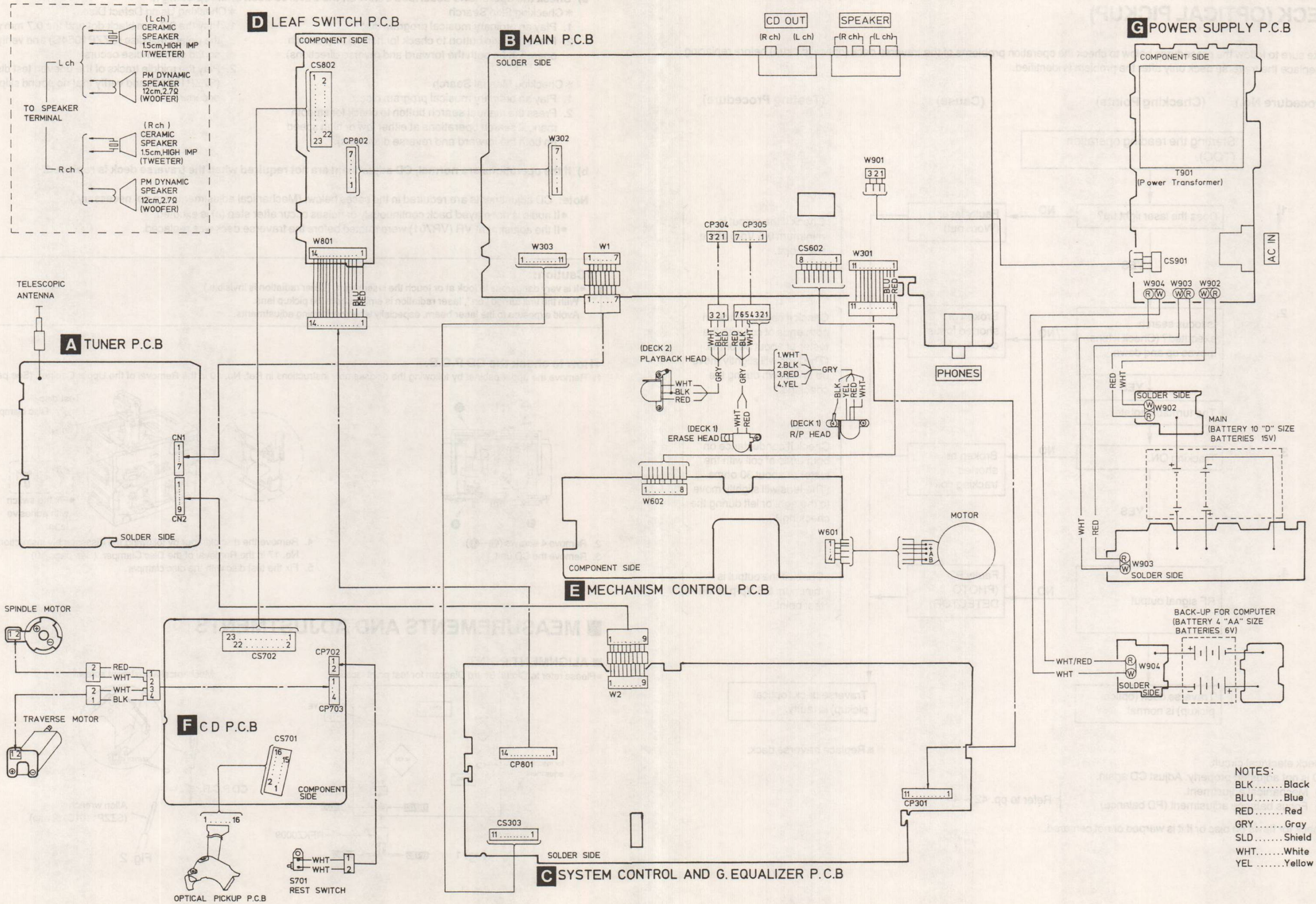

NOTES:
BLK.....Black
BLU.....Blue
RED.....Red
GRY.....Gray
SLD.....Shield Wire
WHT.....White
YEL.....Yellow

■ CHECKING THE OPERATION PROBLEMS ON THE TRAVERSE DECK (OPTICAL PICKUP)

Make sure to follow the procedures below to check the operation problems of the traverse deck (optical pickup) before replacing it. Replace the traverse deck only after the problem is identified.

(Procedure No.) (Checking Points) (Cause) (Testing Procedure)

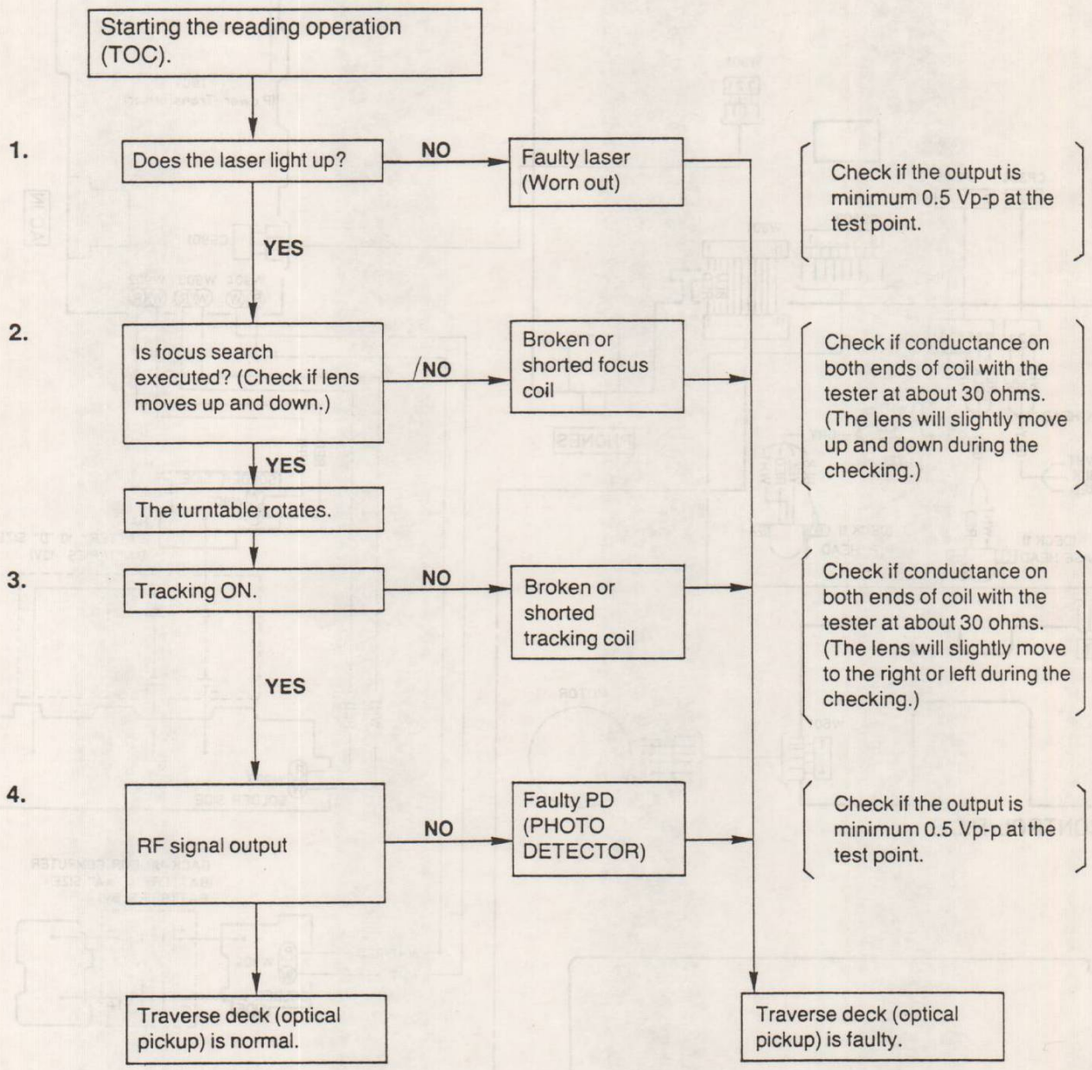

※Replace traverse deck.

- Check electrical circuit.
- CD is not adjusted properly. Adjust CD again.
  (1) Mechanical adjustment.
  (2) Focus balance adjustment (PD balance)
  } Refer to pp. 42 ~ 44
- Check for flaws on disc or if it is warped or not centered.

※Checking Operations of Replaced Traverse Deck (New Traverse Deck)

a) Check the operations described below on the traverse deck after replacing it.

∗Checking Skip Search
1. Play an ordinary musical program disc.
2. Press the skip button to check for normal skip search operation (in both the forward and reverse directions).

∗Checking Manual Search
1. Play an ordinary musical program disc.
2. Press the manual search button to check for smooth manual search operations at either low or high speed (in both the forward and reverse directions).

∗Checking Using Defect Disc.
1. Play the 0.7 mm black dot and the 0.7 mm wedge on the defect test disc (SZZP1054C) and verify that no sound skip or noise occurs.
2. Play the middle tracks of the uneven test disc (SZZP1056C) and verify that no sound skip or noise occurs.

b) If the operations are normal, CD adjustment are not required when the traverse deck is replaced.

Note: CD adjustments are required in the cases below. (Mechanical adjustments are not necessary.)
- If audio is not played back continuously or noises occur after step (a) is excuted.
- If the adjustment VR (VR701) were rotated before the traverse deck was replaced.

Caution:
- It is very dangerous to look at or touch the laser beam. (Laser radiation is invisible.)
  With the unit turned "on", laser radiation is emitted from the pickup lens.
  Avoid exposure to the laser beam, especially when performing adjustments.

●How to check the CD P.C.B.

1. Remove the upper cabinet by following the disassembly instructions in Ref. No. 10 in the Removal of the Upper Cabinet. (See page 9)

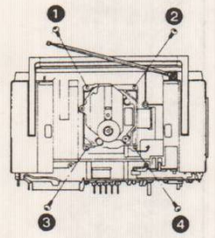

2. Remove 4 screws (❶~❹).
3. Remove the CD unit.

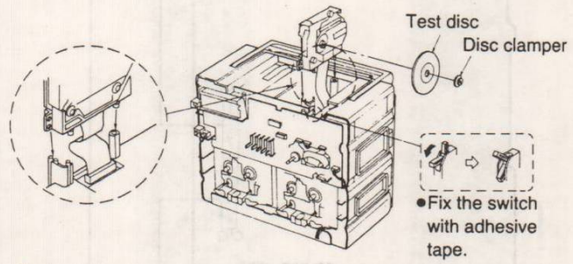

4. Remove the disc clamper by following the disassembly instructions in Ref. No. 17 in the Removal of the Disc Clamper. (See page 10)
5. Fix the test disc with the disc clamper.

■ MEASUREMENTS AND ADJUSTMENTS

■ ALIGNMENT POINT

●Please refer to Circuit Board Diagram for test point location

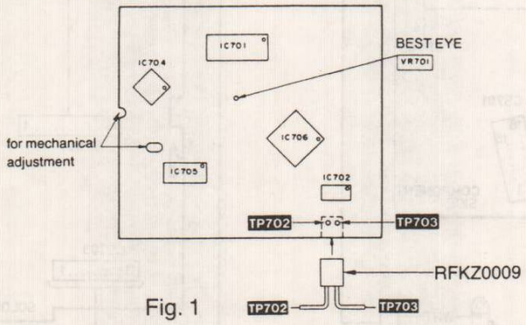

Fig. 1

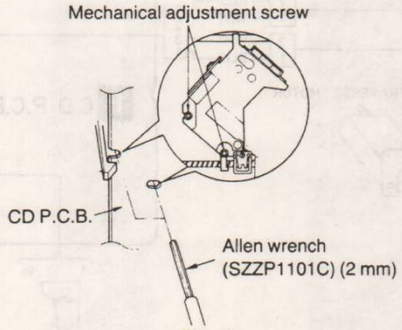

Fig. 2

<CD SECTION>

■ The optional extension cable kit composed of a 23-pin flat cable and a 2-pin connector should be used to perform measurement and adjustment of the unit's CD P.C.B.

Part number of the Extention Cable Kit: RFKZ0009

2-pin connector ..... ×1

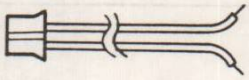

23-pin flat cable ..... ×1

Not use

•HOW TO ADJUST THE CD P.C.B.

1. Attach the CD unit and load the test disc by following the steps in the section "How to check the CD P.C.B."

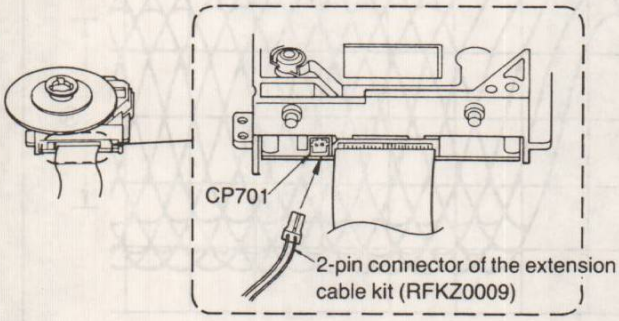

2. Connect the 2-pin connector of the extension cable kit (RFKZ0009) to CP701 as shown in the figure.

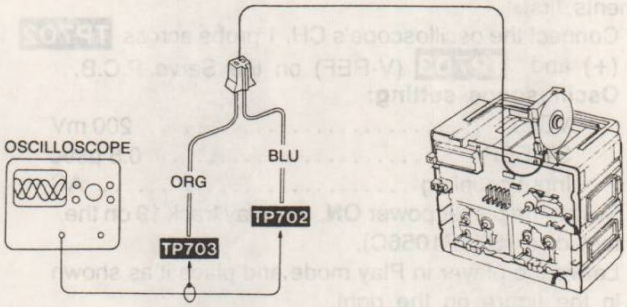

Notes:
BLU...BLUE
ORG...ORANGE

3. Connect the 2-pin connector's orange and blue wires respectively to an oscilloscope as shown in the figure.

•HOW TO ADJUST THE CD P.C.B. IF THE EXTENSION CABLE KIT IS NOT AVAILABLE

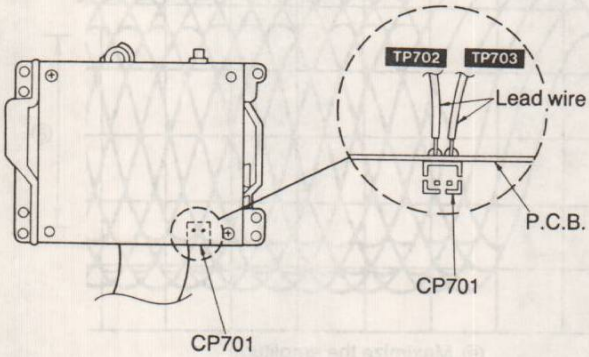

1. Solder the lead wire to the connector (CP701) as shown in the figure.

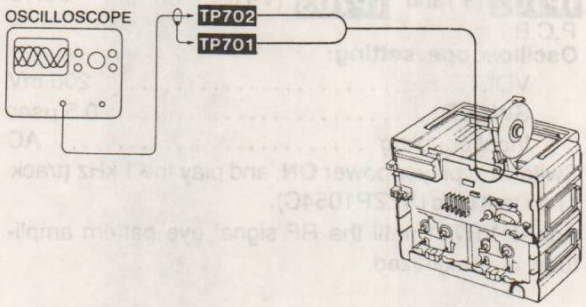

2. Attach the CD unit and load the test disc by following the steps in the section "How to check the CD P.C.B.".

•ALIGNMENT INSTRUCTION

READ CAREFULLY BEFORE ATTEMPTING ALIGNMENT	
•Set power source voltage to 15 V DC. •Set power switch to ON. •Set function switch to CD.	•Set graphic equalizer control to center. •Set S-XBS control to minimum. •Output of signal generator should be no higher than necessary to obtain an output reading.

Caution:
- It is very dangerous to look at or touch the laser beam. (Laser radiation is invisible.)
  With the unit turned "on", laser radiation is emitted from the pickup lens.
  Avoid exposure to the laser beam, especially when performing adjustments.

Measuring Instruments and Special Tools

- Test disc
  1. Playability test disc (SZZP1054C)
  2. Uneven test disc (SZZP1056C)
- Allen wrench (M2.0) (SZZP1101C)
- Oscilloscope
- Lock paint (RZZOL01)

(1) MECHANICAL ADJUSTMENT

- When the traverse deck is replaced, making adjustments is not necessary. (The traverse deck ass'y is already adjusted.)
- Make adjustments to improve playability when the traverse deck has not been replaced. Make the electrical adjustments first.

1. Connect the oscilloscope's CH. 1 probe across **TP702** (+) and **TP703** (V-REF) on the Servo P.C.B.
   Oscilloscope setting:
   VOLT ..... 200 mV
   SWEEP ..... 0.5 µsec
   Input coupling ..... AC
2. Switch the player power **ON**, and play track **19** on the test disc (SZZP1056C).
3. Leave the player in Play mode and place it as shown in the figure on the right.
4. Alternately adjust the two mechanical adjusting screws with the 2.0 mm allen wrench (SZZP1101C) until the RF signal amplitude variation on the oscilloscope is minimized. (Shown in Fig. 2, page 42)
5. After completing the adjustment, lock the **mechanical adjustments** with lock paint (RZZOL01).

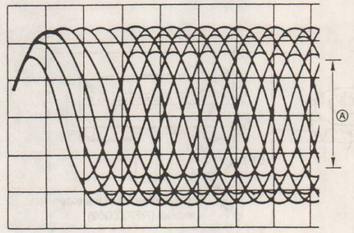

Ⓐ Minimize the variation of amplitude.

(2) BEST EYE (PD BALANCE) ADJUSTMENT

1. Connect the oscilloscope's CH. 1 probe across **TP702** (+) and **TP703** (V-REF) on the Servo P.C.B.
   Oscilloscope setting:
   VOLT ..... 200 mV
   SWEEP ..... 0.5 µsec
   Input coupling ..... AC
2. Switch the player power **ON**, and play the 1 kHz (track 1) on test disc (SZZP1054C).
3. Adjust **VR701** until the RF signal eye pattern amplitude is maximized.

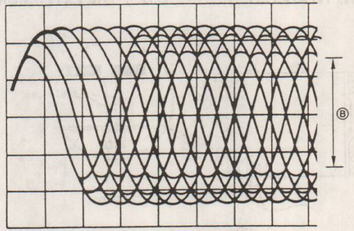

Ⓑ Maximize the amplitude

(3) CHECK OF PLAY OPERATION AFTER ADJUSTMENT

•Checking Skip Search
1. Play an ordinary musical program disc.
2. Press the skip button to check for normal skip search operation (in both the forward and reverse directions).

•Checking Manual Search
1. Play an ordinary musical program disc.
2. Press the manual search button to check for smooth manual search operations at either low or high speed (in both the forward and reverse directions).

•Checking Playability
1. Play the 0.7 mm black dot and the 0.7 mm wedge on the test disc (SZZP1054C) and verify that no sound skip or noise occurs.
2. Play the middle tracks of the uneven test disc and verify that no sound skip or noise occurs.

<TUNER SECTION>

■ ALIGNMENT INSTRUCTIONS

READ CAREFULLY BEFORE ATTEMPTING ALIGNMENT

1. Set volume control to maximum.
2. Set S-XBS control to minimum.
3. Set function selector to TUNER/BAND or TAPE.
4. Set power source voltage to 15V DC.
5. Set band switch to MW/FM/LW
6. Set graphic equalizer controls to center.
7. Set balance control to center.
8. Output of signal generator should be no higher than necessary to obtain an output reading.

■ AM-IF ALIGNMENT

SIGNAL GENERATOR or SWEEP GENERATOR		RADIO DIAL SETTING	INDICATOR (ELECTRONIC VOLTMETER or OSCILLOSCOPE)	ADJUSTMENT (Shown in Fig. 2)	REMARKS
CONNECTIONS	FREQUENCY				
Fashion a loop of several turns of wire and radiate a signal into the loop ant. of receiver.	459 kHz 30% Mod. at 400Hz	Point of non-interference. (on/about 600Hz)	Headphones Jack (32Ω) (Fabricate the plug as shown in Fig. 3 and then connect the lead wires of the plug to the measuring instrument.)	T2 (AM IFT)	Adjust for maximum output.

■ MW-RF ALIGNMENT

Fashion a loop of several turns of wire and radiate a signal into the loop ant. of receiver.	522kHz	Tuning capacitor fully closed.	•	L9 (MW OSC Coil)	Adjust L9, for 1.2 ± 0.15V reading on DC voltmeter.
•	1611kHz	Tuning capacitor fully open.	•	——	7.7V ± 0.8V
•	603kHz	Tune to signal	Headphones Jack (32Ω) (Fabricate the plug as shown in Fig. 3 and then connect the lead wires of the plug to the measuring instrument.)	(*1) L7 (AM ANT Coil)	Adjust for maximum output. Adjust L3 by moving coil along the ferrite core.
•	1,404kHz	•	•	CT3 (MW ANT Trimmer)	Adjust for maximum output.

(*1) Fix antenna coil with wax after completing alignment.

■ FM-IF ALIGNMENT

SIGNAL GENERATOR or SWEEP GENERATOR		RADIO DIAL SETTING	INDICATOR (ELECTRONIC VOLTMETER or OSCILLOSCOPE)	ADJUSTMENT (Shown in Fig. 2)	REMARKS
CONNECTIONS	FREQUENCY				
Connect to test point **TP7** through ceramic capacitor (0.001µF). Negative side to test point **TP2**.	10.7 MHz (SWEEP)	Point of interference. (on/about 90 MHz)	Connect vert. amp. scope to test point **TP3**. Negative side to test point **TP4**.	T1 (FM 1st)	Wave form is shown in Fig. 4.
•	•	•	•	T3 (FM 2nd)	Wave form is shown in Fig. 5.

■ "ZERO" VOLTAGE ALIGNMENT

FM SIGNAL GENERATOR SOURCE CONNECTION	EQUIPMENT CONNECTION ELECTRONIC COUNTER	ADJUSTMENT (Refer to Fig. 2)	SPECIFICATION	REMARKS
98 MHz, 60 dB(CW) Connect to test point **TP1** through FM dummy antenna. Negative side to **TP2**	**TP9** ...(+) **TP10** ...(–)	T3	0 ± 30mV	Adjust T3, for 0 ± 30mV reading on DC voltmeter.

■ FM-RF ALIGNMENT

SIGNAL GENERATOR or SWEEP GENERATOR		RADIO DIAL SETTING	INDICATOR (ELECTRONIC VOLTMETER or OSCILLOSCOPE)	ADJUSTMENT (Shown in Fig. 2)	REMARKS
CONNECTIONS	FREQUENCY				
Connect to test point **TP1** through FM dummy antenna. Negative side to test point **TP2**.	87.5MHz	Tune to signal	**TP3** ...(+) **TP4** ...(–)	——	2.4 V ± 0.8V
•	108.0 MHz	•	•	——	5.5 V ± 0.8 V
•	90 MHz	•	Headphones Jack (32Ω) (Fabricate the plug as shown in Fig. 3 and then connect the lead wires of the plug to the measuring instrument.)	——	(*2) Adjust for Maximum Output.
•	106MHz	Tune to signal	•	——	•

(*2) Four output responses will be present; Proper tuning is the center frequency.

■ LW-RF ALIGNMENT

SIGNAL GENERATOR or SWEEP GENERATOR		RADIO DIAL SETTING	INDICATOR (ELECTRONIC VOLTMETER or OSCILLOSCOPE)	ADJUSTMENT (Shown in Fig. 2)	REMARKS
CONNECTIONS	FREQUENCY				
Connect to test point **TP1** through FM dummy antenna. Negative side to test point **TP2**.	144 kHz	Tune to signal	**TP3** ...(+) **TP4** ...(–)	L10 (LW OSC Coil)	(*2) Adjust for Maximum Output.
•	288 kHz	•	•	——	6.8 V ± 0.8 V
•	162 kHz	•	Headphones Jack (32Ω) (Fabricate the plug as shown in Fig. 3 and then connect the lead wires of the plug to the measuring instrument.)	L7 (LW ANT Coil)	(*2) Adjust for Maximum Output.
•	270 kHz	•	•	CT4 (LW ANT Trimmer)	•

(*3) Four output responses will be present; Proper tuning is the center frequency.

■ HEAD AZIMUTH ALIGNMENT

TEST TAPE	EQUIPMENT CONNECTION ELECTRONIC COUNTER	ADJUSTMENT	REMARKS
QZZCFM (8 kHz, -20 dB)	Headphones Jack (32Ω) (Fabricate the plug as shown in Fig. 3 and then connect the lead wires of the plug to the measuring instrument.)	Azimuth screw (Shown in Fig. 7)	1. Test equipment connection is shown in Fig.6. 2. Playback the azimuth adjusted part (8kHz,-20dB) of the test tape (QZZCFM) and regulate the angle adjusting screw so that the outputs of L-CH and R-CH are maximized. (When the adjusting positions are different with L-CH and R-CH,find a position where the outputs of L-CH and R-CH are balanced, and then make the adjustment.) 3. At the same time, draw a lissajous waveform and eliminate phase deflection. 4. After the adjustment, apply screw-lock to the angle adjusting value.

SEPARATION ALIGNMENT

FM SIGNAL GENERATOR SOURCE CONNECTION	EQUIPMENT CONNECTION ELECTRONIC COUNTER	ADJUSTMENT	SPECIFICATION	REMARKS
98 MHz, 60 dB(CW) Connect to test point TP1 through FM dummy antenna. Negative side to TP2	TP5...(+) TP6...(−)	VR1	19 kHz	Adjust VR1,for 19kHz ± 50Hz reading on frequency counter

TAPE SPEED ADJUSTMENT

TEST TAPE	EQUIPMENT CONNECTION ELECTRONIC COUNTER	ADJUSTMENT	REMARKS
QZZCWAT (3 kHz)	Headphones Jack (32Ω) (Fabricate the plug as shown in Fig. 3 and then connect the lead wires of the plug to the measuring instrument.)	VR601 (Shown in Fig. 1)	**Normal Speed Adjustment** 1. Insert a test tape (QZZCWAT) in Deck 2 and play it back. 2. Adjust **VR601** until the measured value becomes **3000 ± 30Hz.** 3. Check Deck 1 in the same way to make sure it satisfies the specification. Deck 1 ... 50 Hz of the speed of Deck 2. If it doesn't ,repeat step 1 and 2 above. Note: This set uses one drive motor, so be sure to perform the adjustment in Deck 2. High Speed Measurement 4. Insert the playback tape into Deck 2 and the editing tape into Deck 1. 5. Set the Editing Mode Selector to the "HIGH" position. 6. Press the Deck 1 Pause button, then press the Record Button. 7. Press the Deck 2 Playback Button. * Editing is started by means of the Synchro-Start function. 8. Check to ensure that the measured speed is within 5100~5700.

ALIGNMENT POINT

- Please refer to Circuit Board and Wiring Connection Diagram for test point locations.

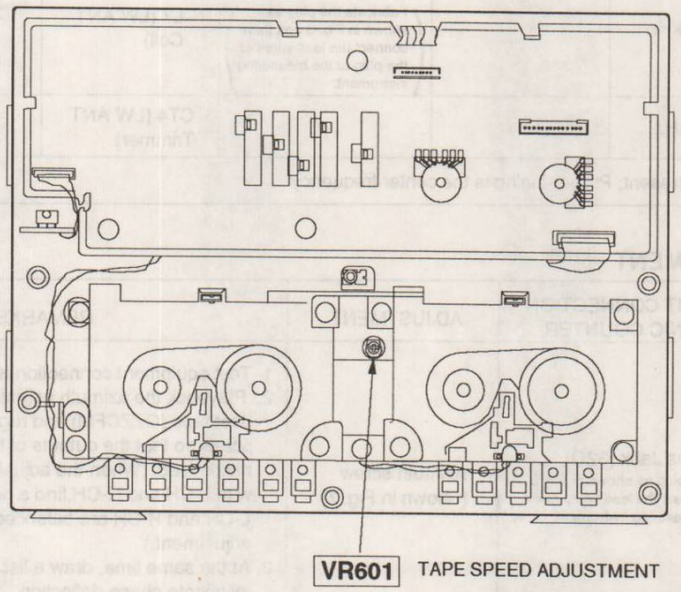

Fig. 1

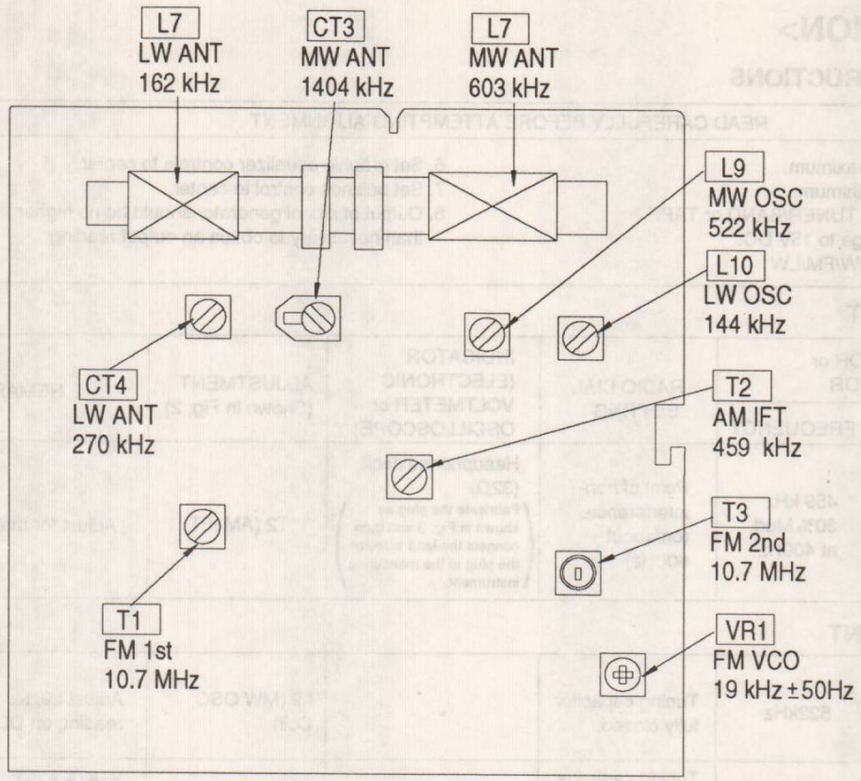

Fig. 2

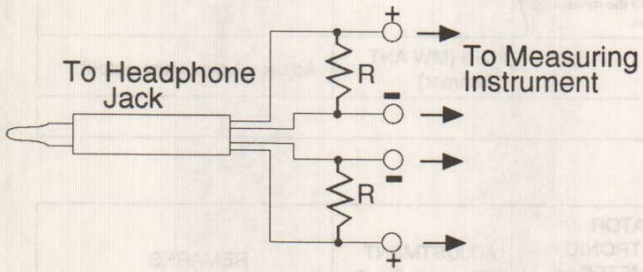

Fig. 3

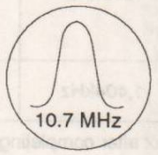

Fig. 4

Fig. 5

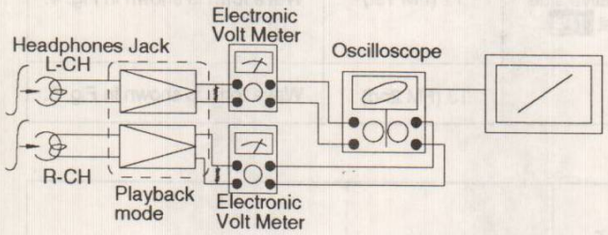

Fig. 6

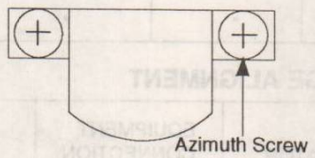

Fig. 7

■ TROUBLESHOOTING GUIDE

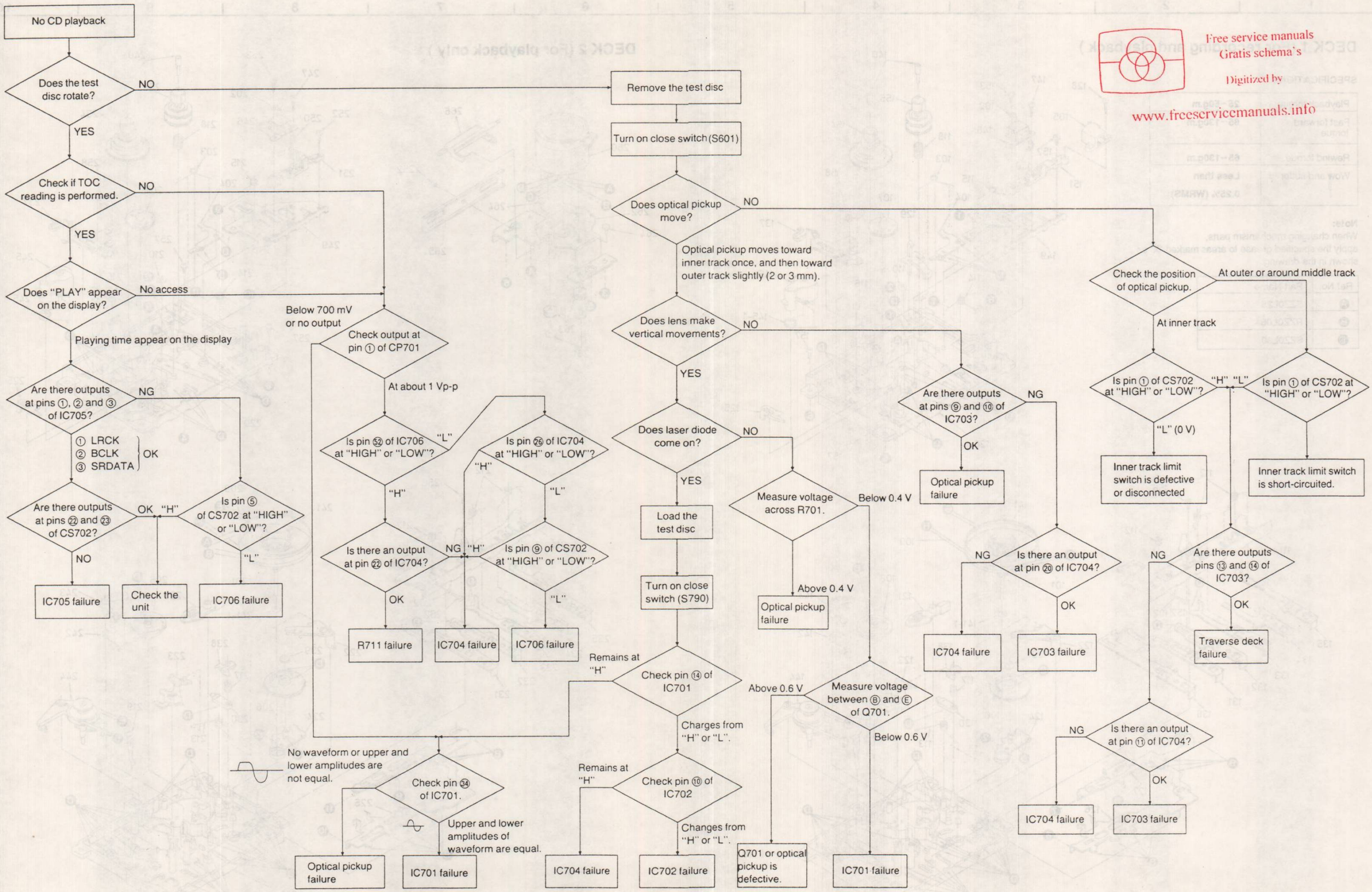

■ MECHANISM PARTS LOCATION (RAA0910)

DECK 1 (For recording and playback)

SPECIFICATIONS

Playback torque	25~50g.m
Fast forward torque	65~130g.m
Rewind torque	65~130g.m
Wow and flutter	Less than 0.25% (WRMS)

Note:
When changing mechanism parts, apply the specified grease to areas marked "X" as shown in the drawing .

Ref.No.	Part Name
Ⓐ	SZZ0L25
Ⓑ	RZZ0L06
Ⓓ	SZZ0L30

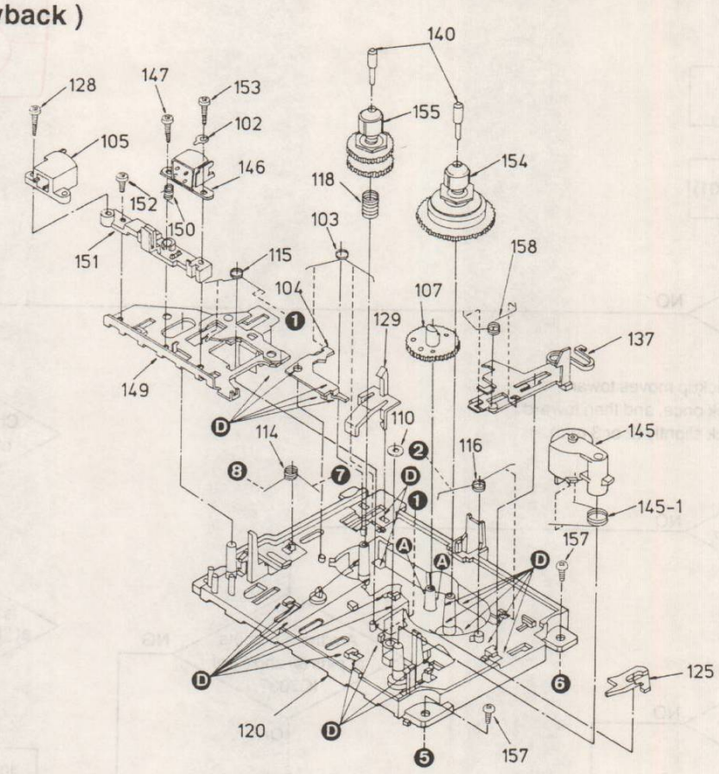

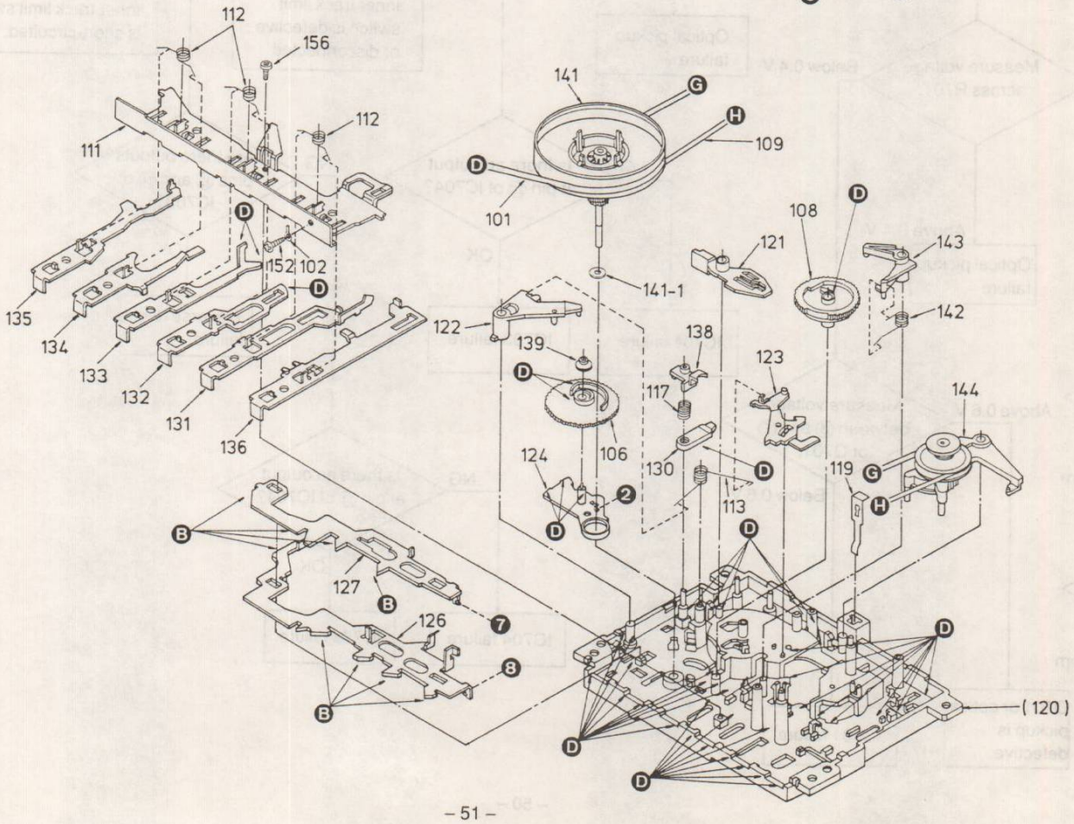

DECK 2 (For playback only)

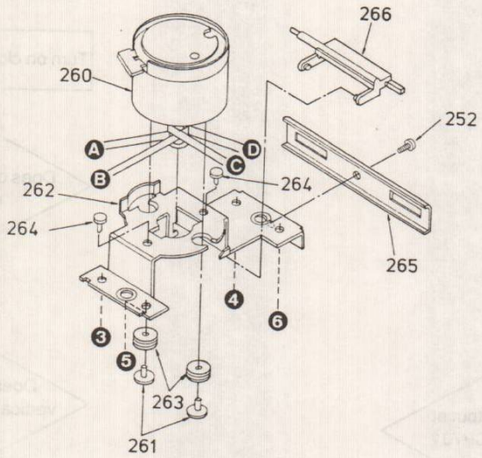

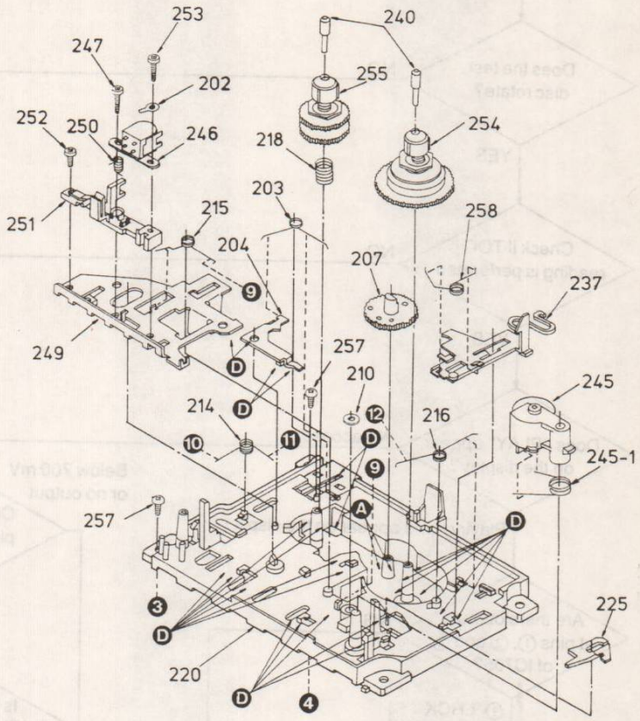

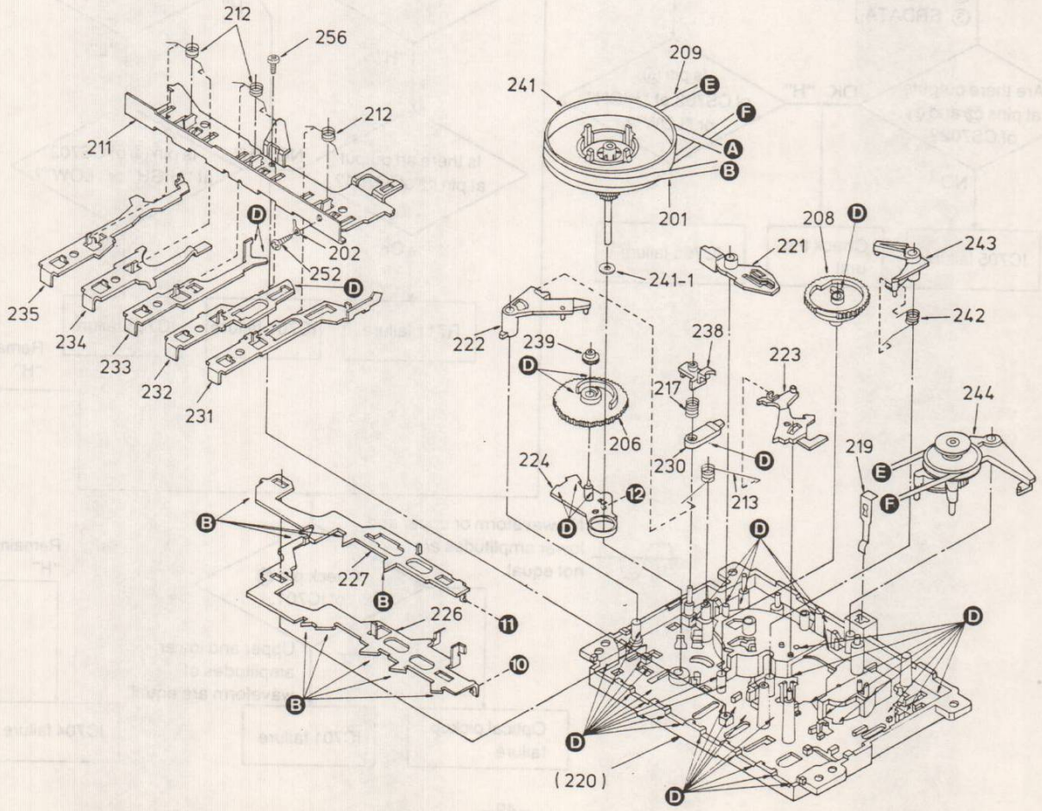

 RX-DT610

■ SPRING LOCATION

<DECK 1, 2>

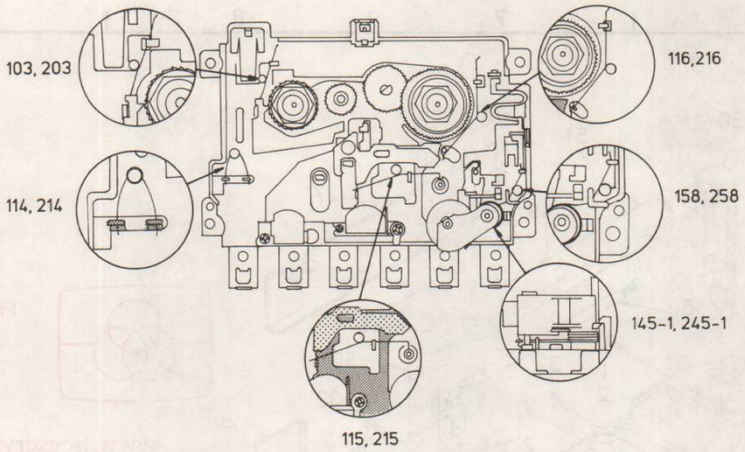

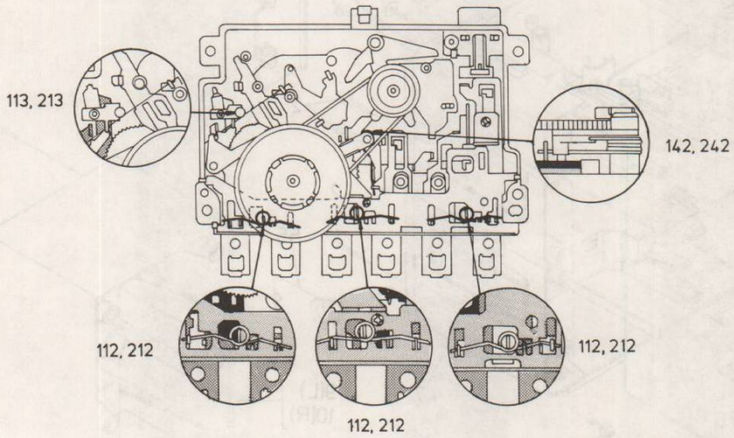

■ SPRING ILLUSTRATION

- The illustration shows the actual size of the springs so it can be used to check their shapes. (The illustration shows the springs separated from the mechanism).

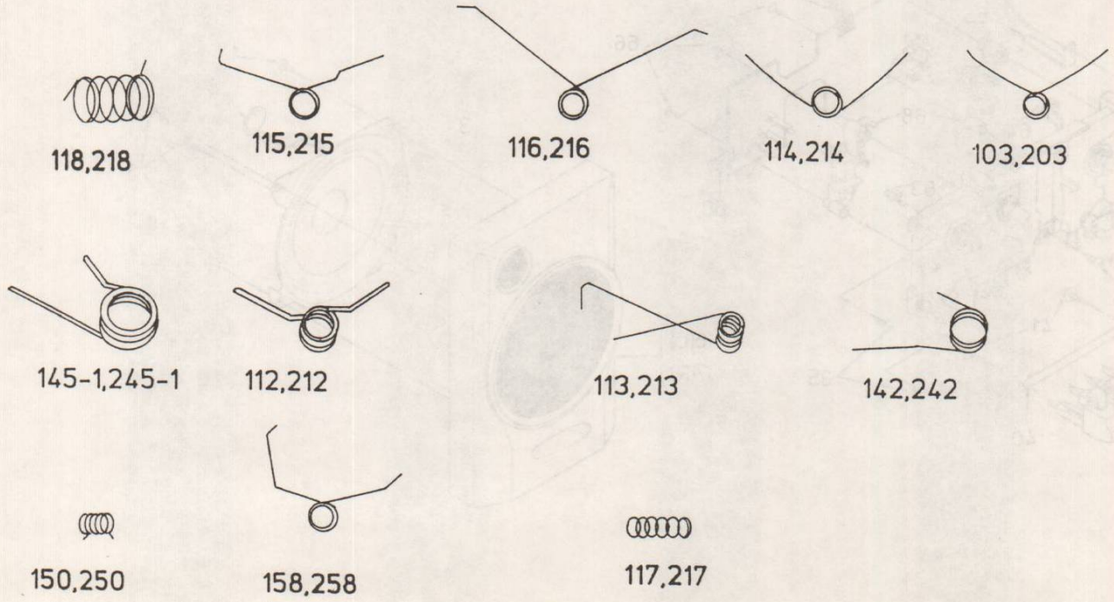

■ MECHANISM PARTS LIST

Ref. No.	Part No.	Part Name & Description	Remarks
		MECHANISM	
101	RDV0007	MAIN BELT	[M]
102	RJR0033	TERMINAL	[M]
103	RMB0109-1	SPRING	[M]
104	RML0116	BRAKE ANGLE	
105	RBR2CG002-S	E HEAD	[M]
106	RDG0057	GEAR	[M]
107	RDG0059	GEAR	[M]
108	RDK0005	GEAR	[M]
109	RDV0006-1	BELT	[M]
110	RHW16009	WASHER	[M]
111	RMA0109	ANGLE	[M]
112	RMB0043-1	SPRING	[M]
113	RMB0045	SPRING	[M]
114	RMB0046-1	SPRING	[M]
115	RMB0047	SPRING	[M]
116	RMB0048	SPRING	[M]
117	RMB0053	SPRING	[M]
118	RMB0125	SPRING	[M]
119	RMC0061	SPRING	[M]
120	RFKRCT090P-K	CHASSIS ASS'Y	[M]
121	RML0071	LEVER	[M]
122	RML0072	LEVER	[M]
123	RML0073-1	LEVER	[M]
124	RML0074	LEVER	[M]
125	RML0076	LEVER	[M]
126	RML0077	LEVER	[M]
127	RML0078	LEVER	[M]
128	XTN2+6J	SCREW	
129	RML0081-1	LEVER	[M]
130	RML0082	LEVER	[M]
131	RMM0023	PLAY ROD	[M]
132	RMM0024	REW ROD	[M]
133	RMM0025	FF ROD	[M]
134	RMM0026	STOP ROD	[M]
135	RMM0027	PAUSE ROD	[M]
136	RMM0028	REC ROD	[M]
137	RMM0029	EJECT ROD	[M]
138	RMR0211	STOPPER	[M]
139	RMR0227	STOPPER	[M]
140	RMS0055	PIN	[M]
141	RXF0012	FLYWHEEL ASS'Y	[M]
141-1	RHW21008	WASHER	[M]
142	RMB0044	SPRING	[M]
143	RML0075	LEVER	[M]
144	RXP0014	PULLEY ASS'Y	[M]
145	RXP0015	ROLLER ASS'Y	[M]
145-1	RMB0049	SPRING	[M]
146	RBR4CM001-M	R/P HEAD	[M]
147	RHD20003	SCREW	[M]
149	RFKRGHM09LEK	HEAD BASE ASS'Y	[M]
150	RMB0059	SPRING	[M]
151	RMR0159	GUIDE	[M]
152	XTN2+4F	SCREW	
153	XTN2+8F	SCREW	
154	RXR0004	TAKE UP REEL ASS'Y	[M]
155	RXR0005	SUPPLY REEL ASS'Y	[M]
156	XTN2+6J	SCREW	
157	XTW26+6L	SCREW	
158	RME0098-2	SPRING	[M]

Ref. No.	Part No.	Part Name & Description	Remarks
201	RDV0009	MAIN BELT	[M]
202	RJR0033	TERMINAL	[M]
203	RMB0109-1	SPRING	[M]
204	RML0116	BRAKE ANGLE	
206	RDG0057	GEAR	[M]
207	RDG0059	GEAR	[M]
208	RDK0005	GEAR	[M]
209	RDV0006-1	BELT	[M]
210	RHW16009	WASHER	[M]
211	RMA0109	ANGLE	[M]
212	RMB0043-1	SPRING	[M]
213	RMB0045	SPRING	[M]
214	RMB0046-1	SPRING	[M]
215	RMB0165	SPRING	[M]
216	RMB0048	SPRING	[M]
217	RMB0053	SPRING	[M]
218	RMB0125	SPRING	[M]
219	RMC0061	SPRING	[M]
220	RFKRCT090P-K	CHASSIS ASS'Y	[M]
221	RML0071	LEVER	[M]
222	RML0072	LEVER	[M]
223	RML0073-1	LEVER	[M]
224	RML0074	LEVER	[M]
225	RML0076	LEVER	[M]
226	RML0077	LEVER	[M]
227	RML0078	LEVER	[M]
230	RML0082	LEVER	[M]
231	RMM0023	PLAY ROD	
232	RMM0024	REW ROD	[M]
233	RMM0025	FF ROD	[M]
234	RMM0026	STOP ROD	[M]
235	RMM0027	PAUSE ROD	[M]
237	RMM0029	EJECT ROD	[M]
238	RMR0211	STOPPER	[M]
239	RMR0227	STOPPER	[M]
240	RMS0055	PIN	[M]
241	RXF0012	FLYWHEEL ASS'Y	[M]
241-1	RHW21008	WASHER	[M]
242	RMB0044	SPRING	[M]
243	RML0075	LEVER	[M]
244	RXP0014	PULLEY ASS'Y	[M]
245	RXP0015	ROLLER ASS'Y	[M]
245-1	RMB0049	SPRING	[M]
246	RBR4CM001-M	P HEAD	[M]
247	RHD20003	SCREW	[M]
249	RFKRGHM09LEK	HEAD BASE	[M]
250	RMB0059	SPRING	[M]
251	RMR0149	GUIDE	[M]
252	XTN2+4F	SCREW	
253	XTN2+8F	SCREW	
254	RXR0004	TAKE UP REEL ASS'Y	[M]
255	RXR0005	SUPPLY REEL ASS'Y	[M]
256	XTN2+6J	SCREW	
257	XTW26+6L	SCREW	
258	RME0098-2	SPRING	[M]
260	RFKPCT090P-K	DC MOTOR ASS'Y	[M]
261	RHD26002	SCREW	
262	RMA0122	ANGLE	
263	RMG0102	RUBBER SPACER	[M]
264	RMG0131	RUBBER SPACER	[M]
265	RMA0121	ANGLE	
266	RML0085	LEVER	[M]

■ CABINET PARTS LOCATION

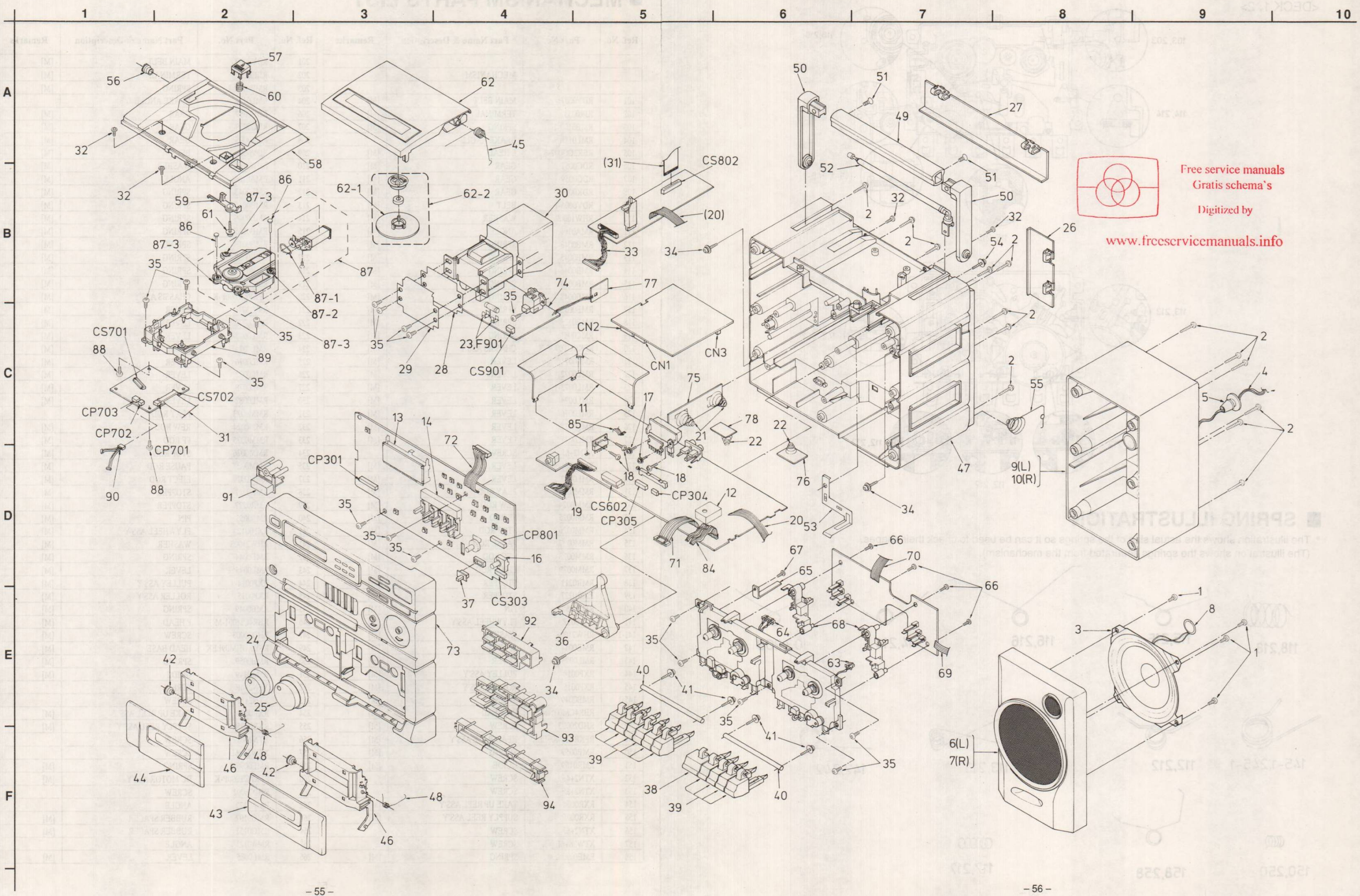

REPLACEMENT PARTS LIST

Notes:
* Important safety notice:
  Components identified by ⚠ mark have special characteristics important for safety.
  Furthermore, special parts which have purposes of fire-retardant (resistors) ,high-quality sound (capacitors) ,low-noise (resistors) ,etc. are used,
  When replacing any of these components ,be sure to use only manufacturer's specified parts shown in the parts list.
* The parenthesized indications in the Remarks columns specify the areas. (Refer to the cover page for area)
  Parts without these indications can be used for all areas.
* [M] Indicates in the Remarks columns indicates parts supplied by **MESA.**

Ref No.	Part No.	Part Name & Description	Remarks
		CABINET & CHASSIS	
1	XTV3+10G	SP. SCREW	
2	XTV3+20G-M	CASING SCREW	[M]
3	EAS12P515K-G	SPEAKER	[M]
4	RJE297ZA	SPEAKER CORD	[M]
5	RHG2152ZA	CORD BUSHING	[M]
6	RFKGXDT610PA	SP.FRONT CAB.ASS'Y(L)	[M]
7	RFKGXDT610PB	SP.FRONT CAB.ASS'Y(R)	[M]
8	RAT0002	TWEETER PLATE	[M]
9	RFKHXDT610PA	SP.REAR CAB.ASS'Y(L)	[M]
10	RFKHXDT610PB	SP.REAR CAB.ASS'Y(R)	[M]
11	RMY0064	HEAT SINK	[M]
12	RMC1227ZA	SHIELD CAN	[M]
13	RUL1135ZA	LCD HOLD PLATE	[M]
14	RSCX0009	SHIELD PLATE	[M]
16	RSCX0006	SHIELD PLATE	[M]
17	XTW3+10F	SCREW	
18	XTV3+8F	SCREW FOR MOUNTING	
19	REXX0027	WIRE ASS'Y	[M]
21	RJC511ZBS	UM-1 BATT SPRING	[M]
22	RJC70031YB	UM-3 BATT SPRING	[M]
23	RJF28ZA	FUSE HOLDER	
24	RGW0103-K	XBS KNOB	[M]
25	RGW0102-K	VOL KNOB	[M]
26	RKK0035-K	BATTERY COVER (UM-3)	[M]
27	RKK347ZB-0	BATTERY COVER (UM-1)	[M]
28	RMC1257ZA	TRANS SHIELD PLATE	[M]
29	RSC0094	TRANS SHIELD PLATE	[M]
30	RSC0163-2	TRANS SHIELD PLATE	[M]
31	REE0270	FFC WIRE	[M]
32	XTN3+10CFZ	SCREW	
33	REXX0018	WIRE ASS'Y	[M]
34	XTWS3+10Q	SCREW	
35	XTV3+12G-M	SCREW	
36	RML0197	RECORD LEVER	[M]
37	RGVX0007-K	EDITING KNOB	[M]
38	RGU0482-K	MECHA BUTTON (L)	[M]
39	RGU0481-K	MECHA BUTTON (S)	[M]
40	SUX102	MECHA BUTTON SHAFT	[M]
41	XTWS3+8T	SCREW FOR SHAFT	

Ref No.	Part No.	Part Name & Description	Remarks
42	RDG5874ZB	GEAR	[M]
43	RFKLXDT610PA	CASS.PANEL ASS'Y(R)	[M]
44	RFKLXDT610PB	CASS.PANEL ASS'Y(L)	[M]
45	RUW217ZA	OPEN SPRING	[M]
46	RFKLXDT610PK	CASS.HOLDER ASS'Y	[M]
47	RFKHXDT610EB	REAR CABINET ASS'Y	[M] (EB,GN)
47	RFKHXDT610EG	REAR CABINET ASS'Y	[M] (EG)
48	RUS781ZA	OPEN SPRING	[M]
49	RKH0012-K	HANDLE BAR	[M]
50	RKX0021-K	HANDLE ARM	[M]
51	XTC3+10CFN	HANDLE SCREW	
52	XEARR175FD-Y	ROD ANTENNA	[M]
53	RMAX0005	R.ANT PLATE	[M]
54	XYN3+F8FY	R.ANT SCREW	
55	RJC931ZC	BATTERY SPRING	
56	RDG5782YC	DAMPER GEAR	[M]
57	RBC1412ZA-0	CD EJECT BUTTON	[M]
58	RKQ0076-K1	DISC TRAY	[M]
59	RUL1136ZA	CD EJECT LEVER	[M]
60	RUS780ZA	CD EJECT SPRING	[M]
61	XTW3+10P	SCREW	
62	RFKKXDT610PA	CD COVER ASS'Y	[M]
62-1	RFKNXDT680PA	DISC PAD ASS'Y	[M]
62-2	RFKNXDT680PB	DISC HOLDER ASS'Y	[M]
63	REXX0029	WIRE ASS'Y	[M]
64	REX0274	WIRE ASS'Y	[M]
65	RMC0076	REC ANGLE	[M]
66	XTN2+14GF	SCREW	[M]
67	XTN2+4F	SCREW	
68	RMR0368	CHASSIS	[M]
71	REX0302	WIRE ASS'Y	[M]
72	REXX0020	WIRE ASS'Y	[M]
73	RFKGXDT610E	FRONT CABINET ASS'Y	[M]
74	RFKBXDT610VA	P.C.B.	[M]
75	RFKBXDT610VB	P.C.B.	[M]
76	RFKBXDT610VC	P.C.B.	[M]
77	RFKBXDT610VD	P.C.B.	[M]
78	RFKBXDT610VE	P.C.B.	[M]
86	RMS0123-1	PIN	
87	SODD110Z	TRAVERSE DECK ASS'Y	
87-1	RDV0014	BELT	
87-2	SHGD112	RUBBER	

Ref No.	Part No.	Part Name & Description	Remarks
87-3	SHGD113-1	RUBBER	
88	XTV26+6G	SCREW	
89	RMK0105	CHASSIS	
90	REE0217-1	WIRE ASS'Y	
91	RGUX0013-K	POWER BUTTON	[M]
92	RGUX0014-K	PRE SET BUTTON	[M]
93	RGUX0015-K	CD/TUNER BUTTON	[M]
94	RGUX0016-K	FUNCTION BUTTON	[M]
		INTEGRATED CIRCUIT(S)	
IC 1	AN7273A	I.C,FM/AM IF	
IC 2	RVIBA1332L	I.C,FM MPX	
IC 3	LM7001	I.C,PLL	
IC301	BU4066B	I.C,ANALOG SW	
IC302	BU4066B	I.C,ANALOG SW	
IC303	BA3416BL	I.C,TAPE EQ AMP	
IC304	BA3310N	I.C,REC AMP	
IC305	AN7134N-R	I.C,POWER AMP	
IC306	BA3920	IC.,POWER SUPPLY CNTL	
IC307	S81250PG-T	I.C,5V REGULATOR	
IC308	BA3822LS-M	I.C,G.EQ AMP	[M]
IC701	AN8800SCE2	I.C,SERVO AMP	
IC702	TCA0372DM2R	I.C,SPLINDLE M.DRIVE	
IC703	AN8377N	I.C,TRAVERSE M.DRIVE	
IC704	MN6650	I.C,DIGITAL SERVO PRO.	
IC705	MN6475	I.C,DIGITAL FILTER	
IC706	MN6626	I.C,DIGITAL SIGNAL PRO.	
IC801	M37410M6H220	I.C,MICRO-COM	[M]
IC802	S8054HN-T	I.C,RESET	
		IC PROTECTOR	
ICP2	RAHICPN10TA	IC PROTECTOR	⚠
ICP3	RAHICPN5TA	IC PROTECTOR	⚠
ICP4	RAHICPN5TA	IC PROTECTOR	⚠
ICP5	RAHICPN20TA	IC PROTECTOR	⚠
ICP6	RAHICPN5TA	IC PROTECTOR	⚠
		TRANSISTOR(S)	
Q 1	2SK544F-AC	TRANSISTOR	
Q 2	2SC2786MTA	TRANSISTOR	
Q 3	2SC2786MTA	TRANSISTOR	
Q 4	2SC1675KTA	TRANSISTOR	[M]
Q 5	2SC829BTA	TRANSISTOR	
Q 6	2SA720STA	TRANSISTOR	[M]

Ref No.	Part No.	Part Name & Description	Remarks
Q 7	2SA720STA	TRANSISTOR	[M]
Q 9	2SA720STA	TRANSISTOR	[M]
Q 10	2SA720STA	TRANSISTOR	[M]
Q 12	2SA564RTA	TRANSISTOR	
Q 13	BN1L3NTA	TRANSISTOR	[M]
Q 14	BN1L3NTA	TRANSISTOR	[M]
Q 15	2SC829CTA	TRANSISTOR	
Q 16	2SA564RTA	TRANSISTOR	
Q 17	2SC2785FTA	TRANSISTOR	
Q 18	2SC2784FTA	TRANSISTOR	[M]
Q 19	2SC2784FTA	TRANSISTOR	[M]
Q101	2SC1684RTA	TRANSISTOR	
Q103	2SC2001L1TA	TRANSISTOR	
Q105	2SC2001KTA	TRANSISTOR	
Q201	2SC1684RTA	TRANSISTOR	
Q203	2SC2001L1TA	TRANSISTOR	
Q205	2SC2001KTA	TRANSISTOR	
Q301	2SC1684HRTA	TRANSISTOR	
Q302	RVTDTA144TST	TRANSISTOR	
Q303	2SC2785FTA	TRANSISTOR	
Q304	2SC2785FTA	TRANSISTOR	
Q305	2SB1185E	TRANSISTOR	
Q306	2SC2785FTA	TRANSISTOR	
Q307	2SC2785FTA	TRANSISTOR	
Q308	2SC1740SRTA	TRANSISTOR	
Q309	2SC1740SRTA	TRANSISTOR	
Q311	2SC2001L1TA	TRANSISTOR	
Q312	2SC1740SRTA	TRANSISTOR	
Q319	2SC2785FTA	TRANSISTOR	
Q320	RVTDTA144EST	TRANSISTOR	
Q321	RVTDTC144EST	TRANSISTOR	
Q322	RVTDTC124TST	TRANSISTOR	
Q323	RVTDTC124TST	TRANSISTOR	
Q601	BA1A4MTA	TRANSISTOR	[M]
Q602	BA1A4MTA	TRANSISTOR	[M]
Q603	2SK301QTA	TRANSISTOR	[M]
Q604	BN1A4MTA	TRANSISTOR	[M]
Q701	2SB709S	TRANSISTOR	
Q801	2SC2785FTA	TRANSISTOR	
Q802	2SA564RTA	TRANSISTOR	
Q803	2SC1740SSTA	TRANSISTOR	
Q804	2SC1740SSTA	TRANSISTOR	
Q805	RVTDTC113ZST	TRANSISTOR	
		DIODE(S)	
D 1	1SV147T4MATU	DIODE	

Ref No.	Part No.	Part Name & Description	Remarks
D 2	1SV147T4MATU	DIODE	
D 3	1SV147T4MATU	DIODE	
D 4	RVDSVC321	DIODE	
D 5	RVDSVC321	DIODE	
D 7	RVDSVC321	DIODE	
D 8	RVDSVC321	DIODE	
D 10	RVD1SS133TA	DIODE	
D 11	RVD1SS133TA	DIODE	
D 12	RVDMTZ5R6BTA	DIODE	
D 15	RVD1SS133TA	DIODE	
D 16	RVD1SS133TA	DIODE	
D 17	RVD1SS133TA	DIODE	
D 18	RVD1SS133TA	DIODE	
D101	RVD1SS133TA	DIODE	
D201	RVD1SS133TA	DIODE	
D301	RVD1SS133TA	DIODE	
D302	RVD1SS133TA	DIODE	
D303	RVDMTZ7R5BTA	DIODE	
D304	RVD1SS133TA	DIODE	
D305	RVD1SS133TA	DIODE	
D306	RVDMTZ10BTA	DIODE	
D307	RVD1SS133TA	DIODE	
D308	RVD1SS133TA	DIODE	
D309	RVDMTZ11BTA	DIODE	
D310	RVDMTZ6R8BTA	DIODE	
D311	RVDMTZ6R8BTA	DIODE	
D312	RVDMTZ5R1BTA	DIODE	
D313	RVD1SS133TA	DIODE	
D318	RVDMTZ6R2BTA	DIODE	
D319	RVD1SS133TA	DIODE	
D602	RVD1SS133TA	DIODE	
D603	RVD1SS133TA	DIODE	
D604	RVD1SS133TA	DIODE	
D605	RVD1SS133TA	DIODE	
D606	RVD1SS133TA	DIODE	
D608	RVD1SS133TA	DIODE	
D609	RVD1SS133TA	DIODE	
D701	MA110TW	DIODE	
D801	RVD1SS133TA	DIODE	
D802	RVD1SS133TA	DIODE	
D803	RVD1SS133TA	DIODE	
D901	1N5402BM21	DIODE	⚠
D902	1N5402BM21	DIODE	⚠
D903	1N5402BM21	DIODE	⚠
D904	1N5402BM21	DIODE	⚠
D905	RVD1SR35TR	DIODE	⚠

Ref No.	Part No.	Part Name & Description	Remarks
		VARIABLE RESISTOR(S)	
VR1	EVNDXAA00B14	V.R,FM VCO	
VR301	EWAJQAW05G54	V.R,G.EQ	[M]
VR302	EWAJQAW05G54	V.R,G.EQ	[M]
VR303	EWAJQAW05G54	V.R,G.EQ	[M]
VR304	EWAJQAW05G54	V.R,G.EQ	[M]
VR305	EWAJUAW05G15	V.R,BALANCE	[M]
VR306	EWC2UAF2054D	V.R,S-XBS	[M]
VR307	EWCT5AF20B54	V.R,VOLUME	[M]
VR601	EVNDXAA00B24	V.R,TAPE SPEED	
VR701	EVNDXAA00B14	V.R,BEST EYE ADJ.	
		COIL(S)	
L 1	RLQY30S4W	RF CHOKE COIL	[M]
L 2	RLA4Y001-E	FM ANT COIL	[M]
L 3	RLA4Y002-E	FM ANT COIL	[M]
L 4	RLQZP1R2KT-Y	COIL	
L 7	RLV6C004-0Z	F. ANT COIL	[M]
L 9	RL02B126-M	AM OSC COIL	[M]
L 10	RL01B15-M	LW OSC COIL	[M]
L 15	RLQZP101KT-Y	COIL	
L 16	RLQZP1R2KT-Y	COIL	[M]
L 17	RLQZP100KT-Y	COIL	
L102	RLQZP101KT-Y	COIL	(EG)
L202	RLQZP101KT-Y	COIL	(EG)
L301	RLQZP100KT-Y	COIL	
L302	RL09B007-M	DD CONVERTER COIL	
L303	RLQZP221KT-Y	COIL	
L304	RLQZP221KT-Y	COIL	
L305	RL08R001-T	REC BIAS OSC COIL	[M]
L306	RLQZB470KT-D	RF CHOKE COIL	
L308	RLQZP101KT-Y	COIL	(EG)
L802	RLQZP2R2KT-Y	COIL	
L808	RLQZP2R2KT-Y	COIL	
L809	RLQZP2R2KT-Y	COIL	
L810	RLQZP2R2KT-Y	COIL	
L811	RLQZP2R2KT-Y	COIL	
L812	RLQZP2R2KT-Y	COIL	
L813	RLQZP2R2KT-Y	COIL	
L814	RLQZP2R2KT-Y	COIL	
L901	RLL500050T-Y	RF CHOKE COIL	⚠
L902	RLL500050T-Y	RF CHOKE COIL	⚠

Ref No.	Part No.	Part Name & Description	Remarks
		DISPLAY	
LD801	RSL5068-L	LCD	[M]
		TRANSFORMER(S)	
T1	RLI4B153-M	FM IFT	
T2	RLI2B153-M	AM IFT	
T3	SLI4B524-Z	FM DET COIL	
T901	RLT5L5A4A-X	POWER TRANSFORMER	[M] ⚠
		FILTER(S)	
CF1	RLFFETWNA01L	CERAMIC FILTER,FM	
CF2	RVFSFZ459HL3	CERAMIC FILTER,AM	[M]
		OSCILLATOR(S)	
X 1	SVQ49U722T-S	XTAL 7.2MHZ	
X701	RSXZ33M8M01T	OSCILLATOR	
X801	RSXZ4M19M01T	CERAMIC RESONATOR	[M]
X802	RSXD32K7S02	RESONATOR(32.7KHZ)	[M]
		FUSE(S)	
F901	XBA2C40TB0	FUSE	⚠
		SWITCH(ES)	
S301	RSH2G03WA-A	SW,PB/REC	[M]
S601	RSH1A004-1	SW,PB1	[M]
S602	RSH1A004-1	SW,PB2	[M]
S603	RSH1A004-1	SW,CUE/REV1	[M]
S604	RSH1A004-1	SW,CUE/REV2	[M]
S605	RSH1A013-J	SW,M1	[M]
S606	RSH1A013-J	SW,M2	[M]
S701	SSHD5-E	SW,REST	
S801	EVQ21405R	SW,POWER	
S802	EVQ21405R	SW,TAPE	
S803	EVQ21405R	SW,TUNERTACT SW	
S804	EVQ21405R	SW,CD	
S805	EVQ21405R	SW,STATION 1	
S806	EVQ21405R	SW,STATION 2	
S807	EVQ21405R	SW,STATION 3	
S808	EVQ21405R	SW,STATION 4	
S809	EVQ21405R	SW,STATION 5	
S810	EVQ21405R	SW,FM/BP	

Ref No.	Part No.	Part Name & Description	Remarks
S811	EVQ21405R	SW,REPEAT	
S812	EVQ21405R	SW,REV/SKIP	
S813	EVQ21405R	SW,SKIP	
S814	EVQ21405R	SW,EDIT PAUSE	
S815	EVQ21405R	SW,MEMORY/RECALL	
S816	EVQ21405R	SW,PAUSE/CLEAR	
S817	EVQ21405R	SW,PLAY/STOP	
S818	EVQ21405R	SW,TUNE DOWN	
S819	EVQ21405R	SW,TUNE UP	
S821	RSS2B73ZA-H	SW,REC NOR/H1	
S822	RSH1A012-U	SW,CD LEAF	
S823	RSH1A012-U	SW,CD LEAF	
S901	RJJ1SE01-H	SW,AC/DC SELECT (J901)	⚠
		JACK(S)	
J301	RJF1099ZA	JACK,CD/LINE-OUT	
J302	RJF1098ZA-H	JACK,SP.TERMINAL	[M]
J303	RJJD7S2YA-C	JACK,H.P JACK	
J304	RJJ1D25ZA-C	JACK,MIC	
J901	RJJ1SE01-H	JACK,AC IN(S901)	⚠
		CONNECTOR(S)	
CN1	SJT3711	CONNECTOR (7P)	
CN2	SJT3909	CONNECTOR (9P)	
CN3	RJP2G18ZA	CONNECTOR (2P)	
CP301	RJP12G18ZA	CONNECTOR (12P)	
CP304	RJP3G18ZA	CONNECTOR (3P)	
CP305	RJP7G18ZA	CONNECTOR	
CP701	RJP2G17ZA	PLUG	
CP702	RJP2G17ZA	PLUG	
CP703	RJP4G17ZA	PLUG	
CP801	RJP14G18ZA	CONNECTOR (14P)	[M]
CS303	RJS11T4ZA	CONNECTOR (11P)	
CS602	RJS8T6ZA	CONNECTOR (8P)	[M]
CS701	RJU035T016-1	CONNECTOR	
CS702	RJS1A6723	CONNECTOR	
CS802	RJS1A6823	CONNECTOR (23P)	
CS901	RJS3T6ZA	CONNECTOR (3P)	[M]
		TRIMMER(S)	
CT3	RCV10AF1T-S	TRIMMER CAPACITOR	[M]
CT4	ECRLA030E53R	TRIMMER CAPACITOR	

RX-DT610

Ref No.	Part No.	Part Name & Description	Remarks
		ACCESSORIES	
A1	RQT1435-G	INSTRUCTION MANUAL	[M] (EB)
A1	RFKSXDT610EG	INSTR' MANUAL ASS'Y	[M] (EG)
A1	RQT1640-L	INSTRUCTION MANUAL	[M] (GN)
A2	RJA0019-U	AC POWER CORD	[M] (EG) ⚠
A2	RJA0015-K	AC POWER CORD	[M] (GN) ⚠
A2	RJA86ZC-K	AC POWER CORD	[M] (EB) ⚠
		PACKING MATERIALS	
P1	RPGX0017	GIFT BOX	[M]
P2	RPNX0004	POLYFOAM	[M]
P3	RPH3SZA	MIRAMAT SHEET	[M]

Ref No.	Part No.	Part Name & Description	Remarks

■ RESISTORS & CAPACITOR

Notes:
* Capacitance values are in microfarads(μF) unless specified otherwise,P=Pico-farads(pF) F=Farads(F)
* Resistance values are in ohms, unless specified otherwise, 1K=1,000(OHM), 1M=1,000K(OHM)
* Bracketed indications in Ref.No. columns specify the area (Refer to the first page for area). Parts without these indication can be used for all areas.

Ref.No.	Part No.	Values & Remarks
	RESISTORS	
R1	ERDS2TJ470T	47 1/4W
R2	ERDS2TJ102T	1K 1/4W
R3	ERDS2TJ104T	100K 1/4W
R4	ERDS2TJ104T	100K 1/4W
R5	ERDS2TJ470T	47 1/4W
R7	ERDS2TJ222T	2.2K 1/4W
R8	ERDS2TJ104T	100K 1/4W
R9	ERDS2TJ103T	10K 1/4W
R10	ERDS2TJ563T	56K 1/4W
R11	ERDS2TJ471T	470 1/4W
R12	ERDS2TJ224T	220K 1/4W
R13	ERDS2TJ471T	470 1/4W
R14	ERDS2TJ473T	47K 1/4W
R15	ERDS2TJ102T	1K 1/4W
R16	ERDS2TJ101T	100 1/4W
R17	ERDS2TJ332T	3.3K 1/4W
R18	ERDS2TJ334T	330K 1/4W
R19	ERDS2TJ331T	330 1/4W
R20	ERDS2TJ331T	330 1/4W
R21	ERDS2TJ331T	330 1/4W
R22	ERDS2TJ103T	10K 1/4W
R22	ERDS2TJ103T	10K 1/4W
R23	ERDS2TJ151T	150 1/4W
R24	ERDS2TJ562T	5.6K 1/4W
R25	ERDS2TJ332T	3.3K 1/4W
R26	ERDS2TJ102T	1K 1/4W
R27	ERDS2TJ104T	100K 1/4W
R28	ERDS2TJ562T	5.6K 1/4W
R29	ERDS2TJ681T	680 1/4W
R30	ERDS2TJ683T	68K 1/4W
R31	ERDS2TJ102T	1K 1/4W
R32	ERDS2TJ682T	6.8K 1/4W
R33	ERDS2TJ104T	100K 1/4W
R34	ERDS2TJ104T	100K 1/4W
R36	ERDS2TJ223T	22K 1/4W
R37	ERDS2TJ223T	22K 1/4W
R39	ERDS2TJ104T	100K 1/4W
R40	ERDS2TJ104T	100K 1/4W

Ref.No.	Part No.	Values & Remarks
R44	ERDS2TJ103T	10K 1/4W
R47	ERDS2TJ103T	10K 1/4W
R49	ERDS2TJ121T	120 1/4W
R50	ERDS2TJ102T	1K 1/4W
R51	ERDS2TJ222T	2.2K 1/4W
R52	ERDS2TJ471T	470 1/4W
R53	ERDS2TJ683T	68K 1/4W
R54	ERDS2TJ153T	15K 1/4W
R55	ERDS2TJ561T	560 1/4W
R56	ERDS2TJ272T	2.7K 1/4W
R57	ERDS2TJ472T	4.7K 1/4W
R58	ERDS2TJ103T	10K 1/4W
R59	ERDS2TJ222T	2.2K 1/4W
R60	ERDS2TJ151T	150 1/4W
R61	ERDS2TJ222T	2.2K 1/4W
R62	ERDS2TJ103T	10K 1/4W
R63	ERDS2TJ102T	1K 1/4W
R68	ERDS2TJ391T	390 1/4W
R69	ERDS2TJ103T	10K 1/4W
R70	ERDS2TJ103T	10K 1/4W
R71	ERDS2TJ103T	10K 1/4W
R72	ERDS2TJ104T	100K 1/4W
R73	ERDS2TJ103T	10K 1/4W
R74	ERDS2TJ224T	220K 1/4W
R75	ERDS2TJ224T	220K 1/4W
R76	ERDS2TJ224T	220K 1/4W
R77	ERDS2TJ472T	4.7K 1/4W
R78	ERDS2TJ103T	10K 1/4W
R81	ERDS2TJ222T	2.2K 1/4W
R101	ERDS2TJ473T	47K 1/4W
R102	ERDS2TJ822T	8.2K 1/4W
R103	ERDS2TJ223T	22K 1/4W
R104	ERDS2TJ330T	33 1/4W
R105	ERDS2TJ472T	4.7K 1/4W
R106	ERDS2TJ104T	100K 1/4W
R107	ERDS2TJ821T	820 1/4W
R108	ERDS2TJ102T	1K 1/4W
R110	ERDS2TJ472T	4.7K 1/4W
R111	ERDS2TJ562T	5.6K 1/4W
R112	ERDS2TJ822T	8.2K 1/4W
R113	ERDS2TJ101T	100 1/4W

Ref.No.	Part No.	Values & Remarks
R114	ERDS2TJ391T	390 1/4W
R115	ERDS2TJ104T	100K 1/4W
R116	ERDS2TJ103T	10K 1/4W
R117	ERDS2TJ682T	6.8K 1/4W
R118	ERDS2TJ2R7T	2.7 1/4W
R122	ERDS2TJ151T	150 1/4W
R123	ERDS2TJ822T	8.2K 1/4W
R125	ERDS2TJ223T	22K 1/4W
R126	ERDS2TJ103T	10K 1/4W
R128	ERDS2TJ333T	33K 1/4W
R129	ERDS2TJ393T	39K 1/4W
R131	ERDS2TJ473T	47K 1/4W
R132	ERDS2TJ224T	220K 1/4W
R133	ERDS2TJ221T	220 1/4W
R142	ERDS2TJ822T	8.2K 1/4W
R144	ERDS2TJ102T	1K 1/4W
R146	ERDS2TJ392T	3.9K 1/4W
R147	ERDS2TJ183T	18K 1/4W
R148	ERDS2TJ682T	6.8K 1/4W
R201	ERDS2TJ473T	47K 1/4W
R202	ERDS2TJ822T	8.2K 1/4W
R203	ERDS2TJ223T	22K 1/4W
R204	ERDS2TJ330T	33 1/4W
R205	ERDS2TJ472T	4.7K 1/4W
R206	ERDS2TJ104T	100K 1/4W
R207	ERDS2TJ821T	820 1/4W
R208	ERDS2TJ102T	1K 1/4W
R210	ERDS2TJ472T	4.7K 1/4W
R211	ERDS2TJ562T	5.6K 1/4W
R212	ERDS2TJ822T	8.2K 1/4W
R213	ERDS2TJ101T	100 1/4W
R214	ERDS2TJ391T	390 1/4W
R215	ERDS2TJ104T	100K 1/4W
R216	ERDS2TJ103T	10K 1/4W
R217	ERDS2TJ682T	6.8K 1/4W
R218	ERDS2TJ2R7T	2.7 1/4W
R222	ERDS2TJ151T	150 1/4W
R223	ERDS2TJ822T	8.2K 1/4W
R225	ERDS2TJ223T	22K 1/4W
R226	ERDS2TJ103T	10K 1/4W
R228	ERDS2TJ333T	33K 1/4W

Ref.No.	Part No.	Values & Remarks
R229	ERDS2TJ393T	39K 1/4W
R231	ERDS2TJ473T	47K 1/4W
R232	ERDS2TJ224T	220K 1/4W
R233	ERDS2TJ221T	220 1/4W
R242	ERDS2TJ822T	8.2K 1/4W
R244	ERDS2TJ102T	1K 1/4W
R246	ERDS2TJ392T	3.9K 1/4W
R247	ERDS2TJ183T	18K 1/4W
R248	ERDS2TJ682T	6.8K 1/4W
R301	ERDS2TJ333T	33K 1/4W
R302	ERDS2TJ333T	33K 1/4W
R303	ERDS2TJ180T	18 1/4W
R304	ERDS2TJ333T	33K 1/4W
R305	ERDS2TJ473T	47K 1/4W
R306	ERDS2TJ473T	47K 1/4W
R307	ERDS2TJ471T	470 1/4W
R308	ERDS2TJ472T	4.7K 1/4W
R309	ERDS2TJ104T	100K 1/4W
R310	ERDS2TJ330T	33 1/4W
R311	ERDS2TJ471T	470 1/4W
R312	ERDS2TJ222T	2.2K 1/4W
R313	ERDS2TJ333T	33K 1/4W
R314	ERDS2TJ102T	1K 1/4W
R316	ERDS2TJ181T	180 1/4W
R317	ERDS2TJ181T	180 1/4W
R318	ERDS2TJ221T	220 1/4W
R319	ERDS2TJ472T	4.7K 1/4W
R320	ERDS2TJ333T	33K 1/4W
R321	ERDS2TJ473T	47K 1/4W
R322	ERDS2TJ473T	47K 1/4W
R323	ERDS2TJ223T	22K 1/4W
R324	ERDS2TJ332T	3.3K 1/4W
R325	ERDS2TJ101T	100 1/4W
R326	ERDS2TJ333T	33K 1/4W
R327	ERDS2TJ472T	4.7K 1/4W
R328	ERDS2TJ1R5T	1.5 1/4W
R329	ERDS2TJ222T	2.2K 1/4W
R330	ERDS2TJ101T	100 1/4W
R331	ERDS2TJ472T	4.7K 1/4W
R332	ERDS2TJ103T	10K 1/4W
R334	ERDS2TJ101T	100 1/4W
R335	ERDS2TJ472T	4.7K 1/4W
R336	ERDS2TJ332T	3.3K 1/4W
R337	ERDS2TJ472T	4.7K 1/4W
R338	ERD2FCVJ4R7T	4.7 1/4W
R340	ERDS2TJ472T	4.7K 1/4W
R341	ERDS2TJ334T	330K 1/4W

Ref.No.	Part No.	Values & Remarks
R342	ERDS2TJ272T	2.7K 1/4W
R343	ERDS2TJ395T	3.9M 1/4W
R346	ERX12SJ4R7E	4.7 1/2W [M]
R347	ERDS2TJ154T	150K 1/4W
R348	ERDS2TJ473T	47K 1/4W
R349	ERX12SJ1R5E	1.5 1/2W [M]
R350	ERDS2TJ331T	330 1/4W
R354	ERDS2TJ333T	33K 1/4W
R355	ERDS2TJ683T	68K 1/4W
R359	ERDS2TJ473T	47K 1/4W
R362	ERDS2TJ221T	220 1/4W
R365	ERDS2TJ104T	100K 1/4W
R366	ERDS2TJ822T	8.2K 1/4W
R367	ERDS2TJ103T	10K 1/4W
R370	ERDS2TJ221T	220 1/4W
R602	ERDS2TJ103T	10K 1/4W
R603	ERDS2TJ223T	22K 1/4W
R604	ERDS2TJ103T	10K 1/4W
R605	ERDS2TJ682T	6.8K 1/4W
R607	ERDS2TJ303T	30K 1/4W [M]
R608	ERDS2TJ303T	30K 1/4W [M]
R609	ERDS2TJ153T	15K 1/4W
R610	ERDS2TJ102T	1K 1/4W
R611	ERDS2TJ105T	1M 1/4W
R701	ERJ6GEYJ100	10 1/10W
R702	ERJ6GEYJ471V	470 1/10W
R703	ERJ6GEYJ102V	1K 1/10W
R704	ERJ6GEYJ103V	10K 1/10W
R706	ERJ6GEYJ473V	47K 1/10W
R707	ERJ6GEYJ222V	2.2K 1/10W
R708	ERJ6GEYJ683V	68K 1/10W
R709	ERJ6GEYJ122V	1.2K 1/10W
R710	ERJ6GEYJ182V	1.8K 1/10W
R711	ERJ6GEYJ473V	47K 1/10W
R712	ERJ6GEYJ471V	470 1/10W
R714	ERJ6GEYJ473V	47K 1/10W
R715	ERJ6GEYJ223V	22K 1/10W
R716	ERJ6GEYJ104V	100K 1/10W
R717	ERJ6GEYJ682V	6.8K 1/10W
R718	ERJ6GEYJ223V	22K 1/10W
R719	ERJ6GEYJ123V	12K 1/10W
R720	ERJ6GEYJ 273V	27K 1/10W
R721	ERJ6GEYJ823	82K 1/10W
R722	ERJ6GEYJ102V	1K 1/10W
R723,724	ERJ6GEYJ104V	100K 1/10W
R725	ERJ6GEYJ471V	470 1/10W
R726	ERJ6GEYJ102V	1K 1/10W

Ref.No.	Part No.	Values & Remarks
R729,730	ERJ6GEYJ102V	1K 1/10W
R731	ERJ8GEYJ470V	47 1/8W
R732	ERJ6GEYJ562V	5.6K 1/10W
R733	ERJ6GEYJ332V	3.3K 1/10W
R734	ERJ6GEYJ562V	5.6K 1/10W
R735	ERJ6GEYJ222V	2.2K 1/10W
R736	ERJ6GEYJ682V	6.8K 1/10W
R737-739	ERJ6GEYJ562V	5.6K 1/10W
R741-743	ERJ6GEYJ102V	1K 1/10W
R744	ERJ6GEYJ393V	39K 1/10W
R745,746	ERJ6GEYJ102V	1K 1/10W
R747	ERJ6GEYJ473V	47K 1/10W
R748	ERJ8GEYJ180V	18 1/8W
R800	ERDS2TJ392T	3.9K 1/4W
R801	ERDS2TJ272T	2.7K 1/4W
R802	ERDS2TJ222T	2.2K 1/4W
R803	ERDS2TJ152T	1.5K 1/4W
R804	ERDS2TJ153T	15K 1/4W
R806	ERDS2TJ153T	15K 1/4W
R807	ERDS2TJ822T	8.2K 1/4W
R808	ERDS2TJ562T	5.6K 1/4W
R809	ERDS2TJ392T	3.9K 1/4W
R810	ERDS2TJ272T	2.7K 1/4W
R811	ERDS2TJ222T	2.2K 1/4W
R812	ERDS2TJ152T	1.5K 1/4W
R813	ERDS2TJ153T	15K 1/4W
R814	ERDS2TJ153T	15K 1/4W
R815	ERDS2TJ822T	8.2K 1/4W
R816	ERDS2TJ562T	5.6K 1/4W
R817	ERDS2TJ392T	3.9K 1/4W
R818	ERDS2TJ272T	2.7K 1/4W
R819	ERDS2TJ222T	2.2K 1/4W
R820	ERDS2TJ152T	1.5K 1/4W
R821	ERDS2TJ153T	15K 1/4W
R822	ERDS2TJ104T	100K 1/4W
R823	ERDS2TJ104T	100K 1/4W
R824	ERDS2TJ104T	100K 1/4W
R826	ERDS2TJ103T	10K 1/4W
R827	ERDS2TJ103T	10K 1/4W
R828	ERDS2TJ103T	10K 1/4W
R829	ERDS2TJ103T	10K 1/4W
R831	ERDS2TJ104T	100K 1/4W
R833	ERDS2TJ472T	4.7K 1/4W
R834	ERDS2TJ102T	1K 1/4W
R836	ERDS2TJ104T	100K 1/4W
R837	ERDS2TJ333T	33K 1/4W
R838	ERDS2TJ824T	820K 1/4W

Ref.No.	Part No.	Values & Remarks
R839	ERDS2TJ471T	470 1/4W
R840	ERDS2TJ822T	8.2K 1/4W
R841	ERDS2TJ104T	100K 1/4W
R842	ERDS2TJ104T	100K 1/4W
R843	ERDS2TJ104T	100K 1/4W
R844	ERDS2TJ103T	10K 1/4W
R845	ERDS2TJ106T	10M 1/4W
R846	ERDS2TJ334T	330K 1/4W
R847	ERDS2TJ105T	1M 1/4W
R848	ERDS2TJ474T	470K 1/4W
R849	ERDS2TJ103T	10K 1/4W
R850	ERDS2TJ223T	22K 1/4W
R851	ERDS2TJ563T	56K 1/4W
R852	ERDS2TJ102T	1K 1/4W
R856	ERDS2TJ563T	56K 1/4W
R860	ERDS2TJ681T	680 1/4W
R861	ERDS2TJ222T	2.2K 1/4W
R862	ERDS2TJ222T	2.2K 1/4W
R863	ERDS2TJ222T	2.2K 1/4W
R865	ERDS2TJ822T	8.2K 1/4W
R866	ERDS2TJ822T	8.2K 1/4W
	CAPACITORS	
C2	ECBT1H102KB5	0.001 50V
C3	ECCR1H120KC5	12P 50V
C4	ECBT1H101KB5	100P 50V
C5	ECBT1H102KB5	0.001 50V
C6	ECBT1H102KB5	0.001 50V
C7	ECBT1H100JC5	10P 50V
C8	ECBT1H3R9KC5	3.9P 50V
C9	ECBT1H150JC5	15P 50V
C10	ECBT1H102KB5	0.001 50V
C11	ECBT1H3R3KC5	3.3P 50V
C12	ECBT1H2R2KC5	2.2P 50V
C13	ECBT1H181KB5	180P 50V
C14	ECBT1H6R8KC5	6.8P 50V
C15	ECBT1H102KB5	0.001 50V
C17	ECBT1C103MS5	0.01 16V
C18	ECBT1C103MS5	0.01 16V
C19	ECBT1H102KB5	0.001 50V
C20	ECBT1H102KB5	0.001 50V
C21	ECBT1H181KB5	180P 50V
C22	ECBT1H181KB5	180P 50V
C23	ECBT1C103MS5	0.01 16V
C24	ECBT1H102KB5	0.001 50V
C25	ECEA1CU100B	10 16V

Ref.No.	Part No.	Values & Remarks
C26	ECBT1H331KB5	330P 50V
C29	ECEA0JU101B	100 6.3V
C30	ECEA1EU4R7B	4.7 25V
C31	ECFR1C223MR	0.022 16V
C32	ECFR1C223MR	0.022 16V
C33	ECEA1AU101B	100 10V
C34	ECFR1C153MR	0.015 16V
C35	ECBT1C103MS5	0.01 16V
C36	ECEA1HU2R2B	2.2 50V
C37	ECBT1H102KB5	0.001 50V
C38	ECFR1C153MR	0.015 16V
C39	ECEA1HU010B	1 50V
C40	ECEA1HUR47B	0.47 50V
C41	ECEA1HUR47B	0.47 50V
C42	ECQP2A102JZT	0.001 100V
C44	ECBT1C103MS5	0.01 16V
C47	ECBT1C103MS5	0.01 16V
C48	ECBT1H470J5	47P 50V
C52	ECFR1C223MR	0.022 16V
C54	ECBT1H6R8KC5	6.8P 50V
C56	ECQP2A391JZT	390P 100V
C58	ECQP2A121JZT	120P 100V
C60	ECQP2A181JZT	180P 100V
C62	ECBT1H101KB5	100P 50V
C64	ECFR1C223MR	0.022 16V
C65	ECBT1H121KB5	120P 50V
C66	ECBT1C103MS5	0.01 16V
C67	ECBT1C103MS5	0.01 16V
C68	ECEA1HU010B	1 50V
C69	ECEA1HUR47B	0.47 50V
C70	ECEA0JU101B	100 6.3V
C71	ECKR1H103MD5	0.01 50V
C72	ECBT1H101KB5	100P 50V
C73	ECKR1H103MD5	0.01 50V
C74	ECBT0J153MS5	0.015 6.3V
C75	ECEA1HU2R2B	2.2 50V
C76	ECFW1C223MDY	0.022 16V
C77	ECBT1H102KB5	0.001 50V
C78	ECEA1HNR47SB	0.47 50V
C79	ECBT1C103MS5	0.01 16V
C83	ECEA1CU330B	33 16V
C86	ECBT1H150JC5	15P 50V
C87	ECBT1H150JC5	15P 50V
C88	ECBT1H331KB5	330P 50V
C89	ECBT1H331KB5	330P 50V
C90	ECBT1H331KB5	330P 50V
C91	ECEA1CU100B	10 16V

Ref.No.	Part No.	Values & Remarks
C92	ECBT1H102KB5	0.001 50V
C93	ECEA1CU330B	33 16V
C96	ECEA1CU330B	33 16V
C97	ECBT1H102KB5	0.001 50V
C98	ECBT1H101KB5	100P 50V
C99	ECBT1H331KB5	330P 50V
C101	ECBT1H471KB5	470P 50V
C102	ECBT1H102KB5	0.001 50V
C103	ECBT1H471KB5	470P 50V
C104	ECEA0JU221B	220 6.3V
C105	ECFR1C333KR	0.033 16V
C106	ECEA1CU100B	10 16V
C107	ECFR1C473KR	0.047 16V
C108	ECEA1AU101B	100 10V
C109	ECEA1AU222B	2200 10V
C110	ECEA0JU101B	100 6.3V
C111	ECEA1EU4R7B	4.7 25V
C112	ECBT1H102KB5	0.001 50V
C113	ECFR1C103MR	0.01 16V
C114	ECEA0JU101B	100 6.3V
C115	ECFR1C333KR	0.033 16V
C116	ECBT1H330J5	33P 50V
C117	ECBT1H102KB5	0.001 50V
C118	ECEA1HU010B	1 50V
C119	ECBT1H471KB5	470P 50V
C121	ECEA1CU100B	10 16V
C122	ECQV1H224JZ3	0.22 50V
C123	ECBT1H102KB5	0.001 50V
C142	ECEA1HK010B	1 50V
C143	ECBT1H471KB5	470P 50V
C144	ECFR1C473MR	0.047 16V
C145	ECBT1H102KB5	0.001 50V
C146	ECBT1C332MR5	3300P 16V
C147	ECBT1C103MS5	0.01 16V
C148	ECEA1CU100B	10 16V
C149	ECEA1HU2R2B	2.2 50V
C150	ECFR1C333MR	0.033 16V
C151	ECEA1HU0R1B	0.1 50V
C152	ECEA1HUR33B	0.33 50V
C153	ECFR1C153MR	0.015 16V
C155	ECEA1HU010B	1 50V
C156	ECBT1H561KB5	560P 50V
C157	ECFR1C473MR	0.047 16V
C158	ECBT1H331KB5	330P 50V
C159	ECFR1C104JR	0.1 16V
C201	ECBT1H471KB5	470P 50V
C202	ECBT1H102KB5	0.001 50V

Ref.No.	Part No.	Values & Remarks
C203	ECBT1H471KB5	470P 50V
C204	ECEA0JU221B	220 6.3V
C205	ECFR1C333KR	0.033 16V
C206	ECEA1CU100B	10 16V
C207	ECFR1C473KR	0.047 16V
C208	ECEA1AU101B	100 10V
C209	ECEA1AU222B	2200 10V
C210	ECEA0JU101B	100 6.3V
C211	ECEA1EU4R7B	4.7 25V
C212	ECBT1H102KB5	0.001 50V
C213	ECFR1C103MR	0.01 16V
C214	ECEA0JU101B	100 6.3V
C215	ECFR1C333KR	0.033 16V
C216	ECBT1H330J5	33P 50V
C217	ECBT1H102KB5	0.001 50V
C218	ECEA1HU010B	1 50V
C219	ECBT1H471KB5	470P 50V
C221	ECEA1CU100B	10 16V
C222	ECQV1H224JZ3	0.22 50V
C223	ECBT1H102KB5	0.001 50V
C242	ECEA1HK010B	1 50V
C243	ECBT1H471KB5	470P 50V
C244	ECFR1C473MR	0.047 16V
C245	ECBT1H102KB5	0.001 50V
C246	ECBT1C332MR5	3300P 16V
C247	ECBT1C103MS5	0.01 16V
C248	ECEA1CU100B	10 16V
C249	ECEA1HU2R2B	2.2 50V
C250	ECFR1C333MR	0.033 16V
C251	ECEA1HU0R1B	0.1 50V
C252	ECEA1HUR33B	0.33 50V
C253	ECFR1C153MR	0.015 16V
C255	ECEA1HU010B	1 50V
C256	ECBT1H561KB5	560P 50V
C257	ECFR1C473MR	0.047 16V
C258	ECBT1H331KB5	330P 50V
C259	ECFR1C104JR	0.1 16V
C301	ECEA1CU100B	10 16V
C302	ECEA1AU330B	33 10V
C303	ECEA1AU221B	220 10V
C304	ECEA1CU100B	10 16V
C305	ECEA1HU010B	1 50V
C306	ECEA1HU2R2B	2.2 50V
C307	ECEA1CU100B	10 16V
C309	ECEA1HU010B	1 50V
C310	ECEA1HU010B	1 50V
C311	ECBT1C103MS5	0.01 16V

Ref.No.	Part No.	Values & Remarks
C312	ECBT1H220JC5	22P 50V
C313	ECEA1CU100B	10 16V
C314	ECBT1C103MS5	0.01 16V
C315	ECBT1C103MS5	0.01 16V
C316	ECQP1223JZ	0.022 100V
C317	ECEA1AU221B	220 10V
C318	ECEA1HU010B	1 50V
C319	ECEA1EU4R7B	4.7 25V
C320	ECEA1EU4R7B	4.7 25V
C321	ECEA1EU4R7B	4.7 25V
C322	ECEA1EU4R7B	4.7 25V
C323	ECEA1EU101B	100 25V
C324	ECEA1CU471B	470 16V
C325	ECEA1CU101B	100 16V
C326	ECEA1EU4R7B	4.7 25V
C327	ECBT1H102KB5	0.001 50V
C328	ECBT1H471KB5	470P 50V
C329	ECBT1H471KB5	470P 50V
C330	ECEA1CU101B	100 16V
C331	ECA1EM332EV	3300P 25V [M]
C332	ECQP1392JZ	3900P 100V
C333	ECBT1C103MS5	0.01 16V
C334	ECEA1AU221B	220 10V
C335	ECEA1CU100B	10 16V
C336	ECQP1123JZ	0.012 100V
C337	ECBT1C103MS5	0.01 16V
C338	ECBT1H102KB5	0.001 50V
C339	ECBT1C103MS5	0.01 16V
C340	ECEA1AU470B	47 10V
C341	ECEA1HU0R1B	0.1 50V
C342	ECQV1H474JZ3	0.47 50V
C343	ECEA1EU4R7B	4.7 25V
C344	ECEA1HU010B	1 50V
C346	ECEA1HU010B	1 50V
C347	ECBT1H102KB5	0.001 50V
C348	ECEA1HU010B	1 50V
C349	ECEA1AU101B	100 10V
C351	ECEA0JU101B	100 6.3V
C352	ECBT1C332MR5	3300P 16V
C353	ECFR1C473KR	0.047 16V
C354	ECBT1H102KB5	0.001 50V
C355	ECEA1AU471B	470 10V
C357	ECBT1H102KB5	0.001 50V
C358	ECEA0JU471B	470 6.3V
C370	ECEA1CU471B	470 16V
C601	ECEA1CU330B	33 16V
C602	ECEA1EFS101	100 25V [M]

Ref.No.	Part No.	Values & Remarks
C701	ECEA0JKA220	22 6.3V
C702	ECEA0JKS470	47 6.3V
C703	ECEA0JKS101I	100 6.3V
C709	ECUV1C224KBM	0.22 16V
C710	ECUV1C104MBM	0.1 16V
C711	ECUV1E103MBN	0.01 25V
C713	ECEA1CSN4R7I	4.7 16V
C714	ECEA1HKS010	1 50V
C715	ECUV1H472KBN	4700P 50V
C716	ECUV1C473KBN	0.047 16V
C717	ECUV1H681KBN	680P 50V
C718	ECEA1AKS101I	100 10V
C719	ECUV1E103MBN	0.01 25V
C720	ECUV1E153MBN	0.015 25V
C721	ECUV1E103MBN	0.01 25V
C722	ECEA0JKS470	47 6.3V
C723	ECUV1C104MBM	0.1 16V
C724	ECUV1E333MBN	0.033 25V
C725	ECUV1E103MBN	0.01 25V
C726	ECUV1H471KBN	470P 50V
C727	ECEA0JKS470	47 6.3V
C728,729	ECUV1C104MBM	0.1 16V
C730	ECUV1C224KBM	0.22 16V
C731	ECEA0JKS331I	330 6.3V
C732	ECUV1H102MBN	1000P 50V
C733	ECEA0JKS101I	100 6.3V
C734	ECUV1E223MBN	0.022 25V
C735	ECUV1C224KBM	0.22 16V
C737	ECUV1C224KBM	0.22 16V
C738	ECEA0JKS101I	100 6.3V
C739	ECUV1E103MBN	0.01 25V
C740	ECUV1H472MBN	4700P 50V
C741	ECUV1C224KBM	0.22 16V
C742	ECUV1C104MBM	0.1 16V
C743	ECEA0JKS331I	330 6.3V
C744,745	ECUV1H102KBN	1000P 50V
C746	ECEA0JKS101I	100 6.3V
C747	ECUV1C104MBM	0.1 16V
C748	ECEA1HKS010	1 50V
C749	ECUV1E103MBN	0.01 25V
C750	ECUV1H050DCN	5P 50V
C751	ECUV1C224KBM	0.22 16V
C752	ECUV1C104MBM	0.1 16V
C753,754	ECEA1HKS010	1 50V
C755	ECUV1C104MBM	0.1 16V
C756,757	ECUV1H050DCN	5P 50V
C758	ECUV1C224KBM	0.22 16V

ORDER NO. MD9209080S8

Service Manual

Supplement

Portable Stereo Component CD System

Radio Cassette

RX-DT610

Colour

(K) . . . . . Black Type

Area

Suffix for Model No.	Area	Colour
(EB)	Great Britain	(K)
(EG)	Continental Europe	
(GN)	Oceania	

•Please file and use this Supplement Manual together with the Service Manual for Model No.RX-DT610 EB,EG & GN-K, Order No. MD9204011C8
•This supplement is intended to provide additional information or corrections to the existing Service Manual for Model No. RX-DT610 EB,EG & GN-K. Be sure to update your Service Manual for future reference.
•Please ignore page 17 & 18 of the original Service Manual and refer to page 3 & 4 of this supplement Service Manual.

CORRECTION

Notes: 1.Important Safety notice:
Components identified by ⚠ mark have special characteristics important for safety.
Furthermore, special parts which have purposes of fire-retardant (resistors), high-quality sound (capacitors), low-noise (resistors) ,etc. are used
When replacing any of these components ,be sure to use only manufacturer's specified parts shown in the parts list.
2.[M] indicates parts that are supplied by **MESA**.

Ref. No.	Parts Name & Description	Change of Parts Number: Original	Change of Parts Number: Supplement	Remarks
CABINET & CHASSIS				
28	TRANS SHIELD PLATE [M]	RMC1257ZA	———	DELETED
95	GROUND PLATE [M]	———	RSCX0011	ADDED
CONNECTOR(S)				
CS501	CONNECTOR	———	RJS2T7ZA	ADDED
COIL(S)				
L16	COIL [M]	RLQZP1R2KT-Y	RLQZP1R2JT-Y	CORRECTED
CAPACITORS				
C42	CAPACITOR 0.001 100V	ECQP2A102JZT	ECQP1102JZT	CHANGED
C56	CAPACITOR 390P 100V	ECQP2A391JZT	ECQP1391JZT	CHANGED

Panasonic

SCHEMATIC DIAGRAM (Page 17,20)

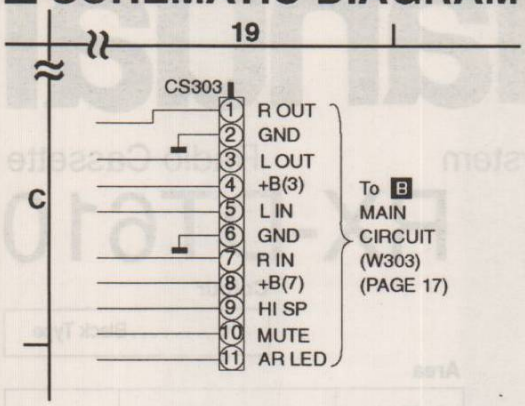

RX-DT610 (ORIGINAL)

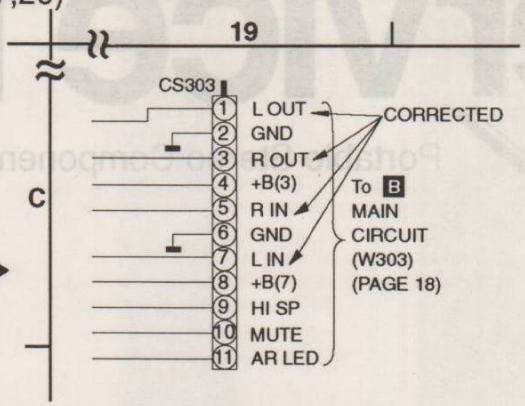

RX-DT610 (SUPPLEMENT)

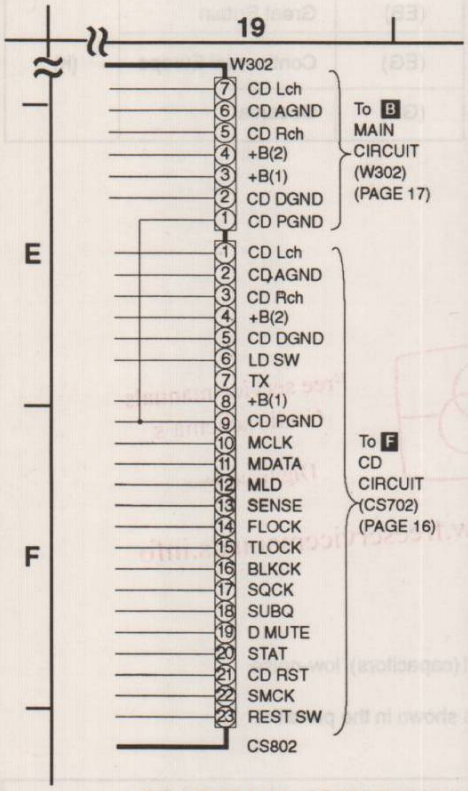

RX-DT610 (ORIGINAL)

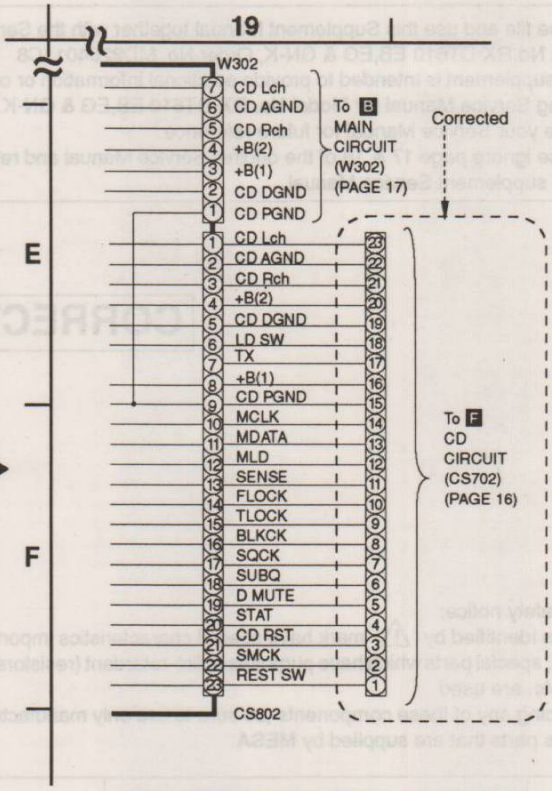

RX-DT610 (SUPPLEMENT)

■ SCHEMATIC DIAGRAM (G.EQ, Main, Power, Mecha Circuit)

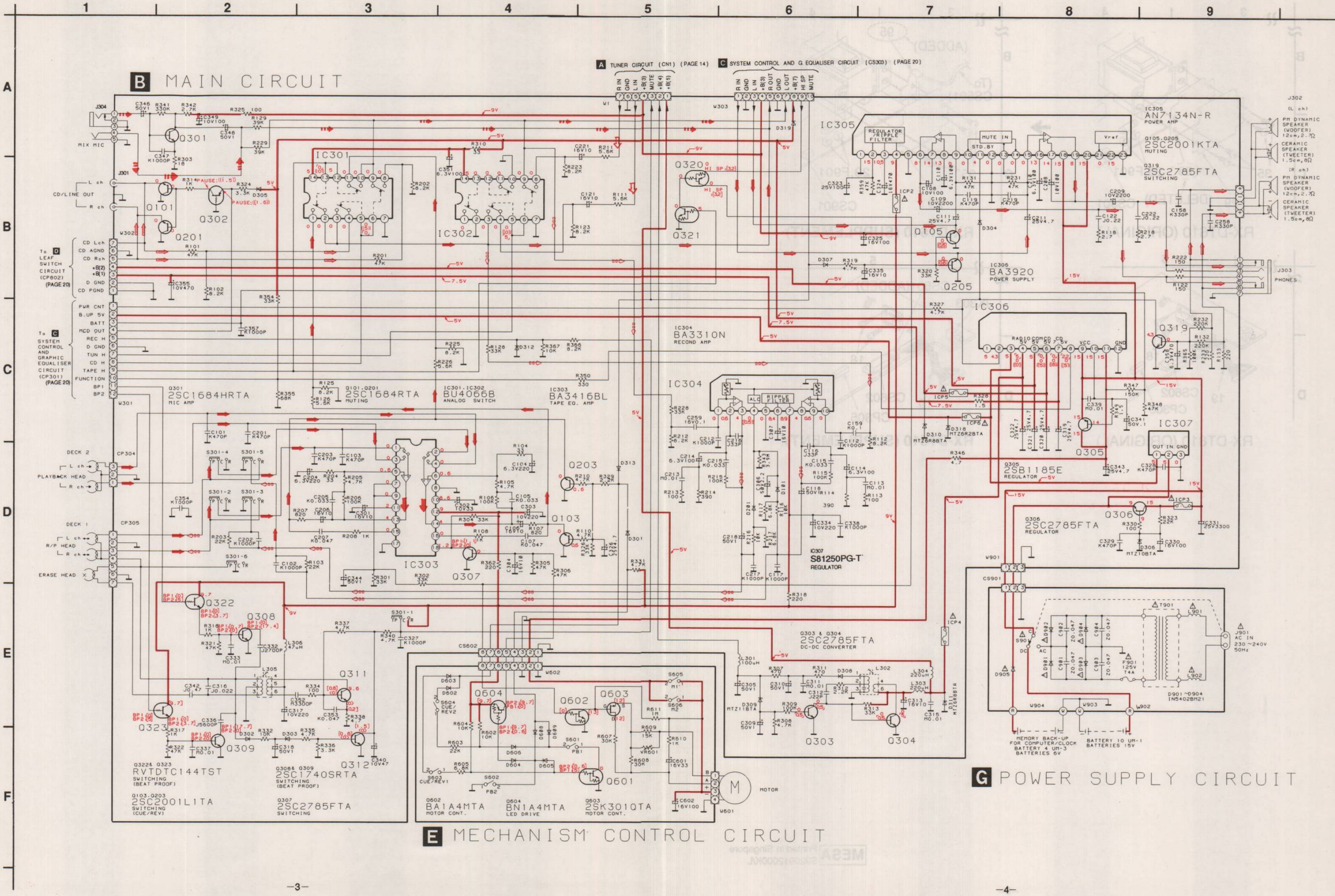

■ CABINET PARTS LOCATION (Page 55,56)

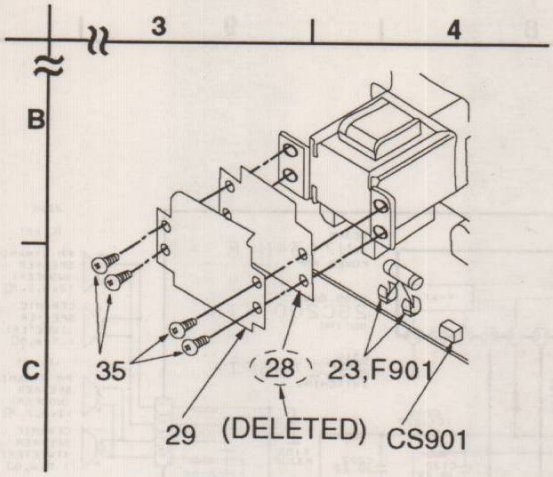

RX-DT610 (ORIGINAL)

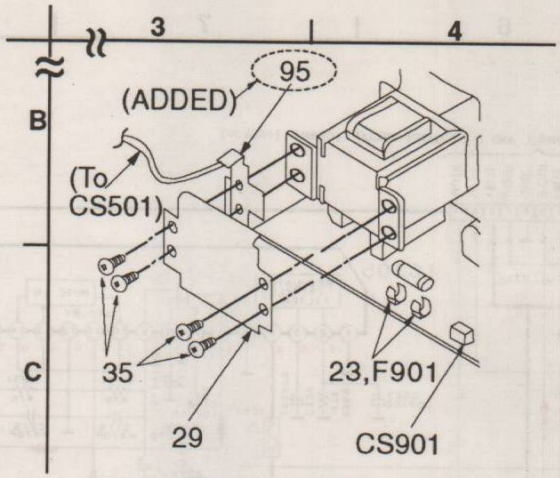

RX-DT610 (SUPPLEMENT)

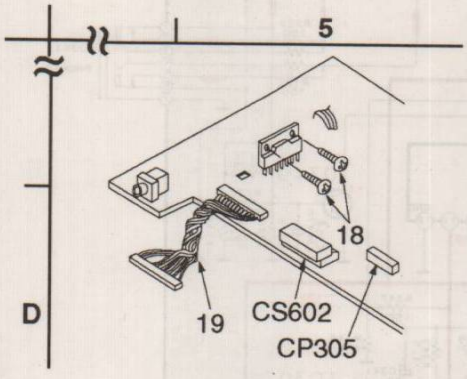

RX-DT610 (ORIGINAL)

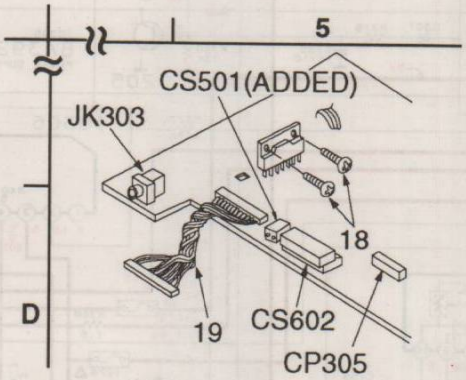

RX-DT610 (SUPPLEMENT)

MESA Printed in Singapore
S920912000K/L