PMX1207007CE

# Service Manual

## CD Stereo System

## Model No. SA-AKX74LM-K

Product Color: (K)...Black Type

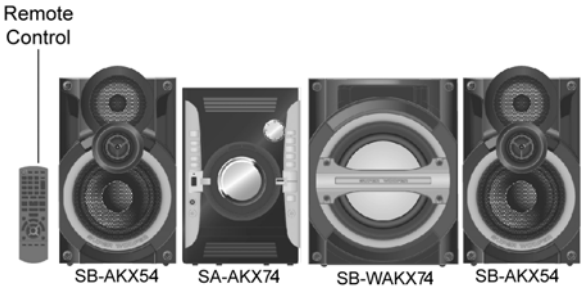


**Please refer to the original service manual for:**
- **CD Mechanism Unit (BRS11C), Order No. PSG1201019AE**
- **Speaker system SB-AKX74LM-K, Order No. PMX1207006CE**

### ⚠ WARNING

This service information is designed for experienced repair technicians only and is not designed for use by the general public.
It does not contain warnings or cautions to advise non-technical individuals of potential dangers in attempting to service a product.
Products powered by electricity should be serviced or repaired only by experienced professional technicians. Any attempt to service or repair the product or products dealt with in this service information by anyone else could result in serious injury or death.

### IMPORTANT SAFETY NOTICE

There are special components used in this equipment which are important for safety. These parts are marked by ⚠ in the Schematic Diagrams, Circuit Board Diagrams, Exploded Views and Replacement Parts List. It is essential that these critical parts should be replaced with manufacturer's specified parts to prevent shock, fire or other hazards. Do not modify the original design without permission of manufacturer.

Panasonic®

© Panasonic Corporation 2012. All rights reserved. Unauthorized copying and distribution is a violation of law.

**Please refer to the original service manual for:**
- **CD Mechanism Unit (BRS11C), Order No. PSG1201019AE**
- **Speaker system SB-AKX74LM-K, Order No. PMX1207006CE**

Nota: El idioma original de este Manual de Servicio es en idioma inglés, sin embargo algunas notas aquí mencionadas serán escritas en español para mejor descripción para Centros de Servicio de México.

# TABLE OF CONTENTS


**1 Safety Precautions**
- 1.1. General Guidelines
- 1.3. Before Repair and Adjustment
- 1.4. Protection Circuitry
- 1.5. Caution For Fuse Replacement
- 1.6. Safety Parts Information

**2 Warning**
- 2.1. Prevention of Electrostatic Discharge (ESD) to Electrostatic Sensitive (ES) Devices
- 2.2. Precaution of Laser Diode
- 2.3. Service caution based on Legal restrictions
- 2.4. Handling Precautions for Traverse Unit

**3 Service Navigation**
- 3.1. Service Information

**4 Specifications**

**5 General/Introduction**
- 5.1. Media Information

**6 Location of Controls and Components**
- 6.1. Remote Control Key Button Operation
- 6.2. Main Unit Key Button Operation

**7 Installation Instructions**
- 7.1. Speaker and A/C Connection

**8 Service Mode**
- 8.1. Cold-Start
- 8.2. Doctor Mode Table
- 8.3. Reliability Test Mode (CD Mechanism Unit (BRS11C))
- 8.4. Self-Diagnostic Mode
- 8.5. Self-Diagnostic Error Code Table

8.6. Sales Demonstration Lock Function
**9 Troubleshooting Guide**
9.1. Part Location
9.2. Troubleshooting Guide for F61 and/or F76
9.3. D-Amp IC Operation & Control
**10 Service Fixture & Tools**
**11 Disassembly and Assembly Instructions**
11.1. Disassembly Flow Chart
11.2. Main Components and P.C.B. Locations
11.3. Disassembly of Top Cabinet
11.4. Disassembly of Front Panel Unit
11.5. Disassembly of Mic P.C.B.
11.6. Disassembly of Panel P.C.B.
11.7. Disassembly of Memory LED P.C.B.
11.8. Disassembly of Remote Sensor P.C.B.
11.9. Disassembly of USB P.C.B.
11.10. Disassembly of Music Port P.C.B.
11.11. Disassembly of Top Bar LED P.C.B.
11.12. Disassembly of Bottom Bar LED P.C.B.
11.13. Disassembly of Main P.C.B.
11.14. Replacement of Voltage Regulator IC (IC2010)
11.15. Replacement of Voltage Regulator IC (IC2011)
11.16. Replacement of Audio Digital Amp IC (IC5800)
11.17. Replacement of Audio Digital Amp IC (IC5700)
11.18. Disassembly of D-Amp P.C.B.
11.19. Replacement of Audio Digital Amp IC (IC5900)
11.20. Disassembly of SMPS P.C.B.
11.21. Replacement of Switching Regulator IC (IC5701)
11.22. Replacement of Rectifier Diode (D5702)
11.23. Replacement of Rectifier Diode (D5801)
11.24. Replacement of Rectifier Diode (D5802)
11.25. Replacement of Regulator Diode (D5803)
11.26. Disassembly of CD Mechanism Unit (BRS11C)
11.27. Disassembly of CD Interface P.C.B.
11.28. Disassembly of CD Servo P.C.B.
11.29. Disassembly of Rear Panel
**12 Service Position**
12.1. Checking and Repairing of Main P.C.B.
12.2. Checking and Repairing of D-Amp P.C.B.
12.3. Checking and Repairing of Panel P.C.B.
12.4. Checking and Repairing of SMPS P.C.B. -
12.5. Checking and Repairing of CD Servo P.C.B. (Side A)
12.6. Checking and Repairing of CD Servo P.C.B. (Side B)
**13 Simplified Block Diagram**
13.1. Power Block Diagram
**14 Block Diagram**
14.1. Servo & System Control
14.2. IC Terminal Chart
14.3. Audio
14.4. Power Supply
**15 Wiring Connection Diagram**
**16 Schematic Diagram**
16.1. Schematic Diagram Notes
16.2. CD Servo Circuit
16.3. Main(MICON) Circuit
16.4. Main(D-Amp) Circuit
16.5. Panel Circuit
16.6. Remote Sensor, USB, Music Port , Memory LED, Top Bar LED and Bottom Bar LED Circuit
16.7. CD Interface, Mic and Voltage Selector Circuit
16.8. D-Amp Circuit
16.9. SMPS Circuit
**17 Printed Circuit Board**
17.1. CD Servo P.C.B.
17.2. Main P.C.B. (Side A)
17.3. Main P.C.B. (Side B)
17.4. Panel, Remote Sensor, USB and Music Port P.C.B.
17.5. Memory LED, CD Interface, Top Bar LED, Bottom Bar LED and Mic P.C.B.
17.7. SMPS and D-Amp P.C.B.
**18 Appendix Information of Schematic Diagram**
18.1. Voltage & Waveform Chart
18.2. Illustration of ICs, Transistor and Diode
18.3. Terminal Function of ICs
**19 Exploded View and Replacement Parts List**
19.1. Exploded View and Mechanical replacement Part List
19.2. Electrical Replacement Part List

# 1 Safety Precautions

## 1.1. General Guidelines

1. When servicing, observe the original lead dress. If a short circuit is found, replace all parts which have been overheated or damaged by the short circuit.
2. After servicing, see to it that all the protective devices such as insulation barriers, insulation papers shields are properly installed.
3. After servicing, carry out the following leakage current checks to prevent the customer from being exposed to shock hazards.

### 1.1.1. Leakage Current Cold Check

1. Unplug the AC cord and connect a jumper between the two prongs on the plug.
2. Measure the resistance value, with an ohmmeter, between the jumpered AC plug and each exposed metallic cabinet part on the equipment such as screwheads, connectors, control shafts, etc. When the exposed metallic part has a return path to the chassis, the reading should be between 1MΩ and 5.2MΩ.
   When the exposed metal does not have a return path to the chassis, the reading must be ∞

### 1.1.2. Leakage Current Hot Check

1. Plug the AC cord directly into the AC outlet. Do not use an isolation transformer for this check.
2. Connect a 1.5kΩ, 10 watts resistor, in parallel with a 0.15μF capacitors, between each exposed metallic part on the set and a good earth ground such as a water pipe, as shown in Figure 1.
3. Use an AC voltmeter, with 1000 ohms/volt or more sensitivity, to measure the potential across the resistor.
4. Check each exposed metallic part, and measure the voltage at each point.
5. Reverse the AC plug in the AC outlet and repeat each of the above measurements.
6. The potential at any point should not exceed 0.75 volts RMS. A leakage current tester (Simpson Model 229 or equivalent) may be used to make the hot checks, leakage current must not exceed 1/2 milliamp. In case a measurement is outside of the limits specified, there is a possibility of a shock hazard, and the equipment should be repaired and rechecked before it is returned to the customer.

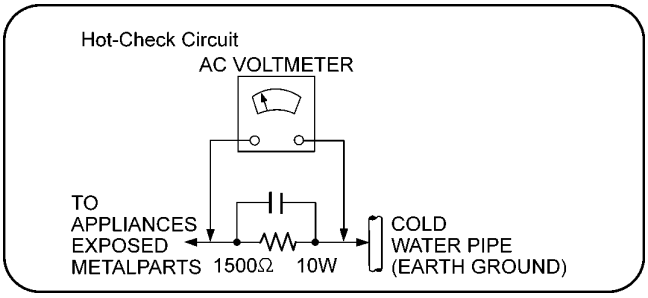


Figure 1

## 1.3. Before Repair and Adjustment

Disconnect AC power to discharge unit AC Capacitors as such (C5700, C5701, C5703, C5708) through a 10 Ω, 10 W resistor to ground.

**Caution:**

DO NOT SHORT-CIRCUIT DIRECTLY (with a screwdriver blade, for instance), as this may destroy solid state devices.

After repairs are completed, restore power gradually using a variac, to avoid overcurrent.

Current consumption at AC 127 V, 60 Hz in Power ON, FM Tuner, No Signal, volume minimal mode should be ~ 750 mA.

## 1.4. Protection Circuitry

The protection circuitry may have operated if either of the following conditions are noticed:

- No sound is heard when the power is turned on.
- Sound stops during a performance.

The function of this circuitry is to prevent circuitry damage if, for example, the positive and negative speaker connection wires are "shorted", or if speaker systems with an impedance less than the indicated rated impedance of the amplifier are used.

If this occurs, follow the procedure outlines below:

1. Turn off the power.
2. Determine the cause of the problem and correct it.
3. Turn on the power once again after one minute.

**Note:**

When the protection circuitry functions, the unit will not operate unless the power is first turned off and then on again.

## 1.5. Caution For Fuse Replacement

### CAUTION:

Replace with the same type fuse:
(Manufacturer: LITTELFUSE, INC, Type: 233, F1, 8A, 125V)

# 1.6. Safety Parts Information

**Safety Parts List:**

There are special components used in this equipment which are important for safety.

These parts are marked by ⚠ in the Schematic Diagrams, Exploded View & Replacement Parts List. It is essential that these critical parts should be replaced with manufacturer's specified parts to prevent shock, fire or other hazards. Do not modify the original design without permission of manufacturer.

**Modelo:** **SC-AKX74LM-K**

| Safety | Nombre del componente | Número de Parte |
|---|---|---|
| ⚠ | **CABLE TOMACORRIENTE.** | **K2CB2YY00059** |
| ⚠ | CONECTOR TOMACORRIENTE | **K2AB2B000007** |
| ⚠ | TRANSFORMADOR DE PODER | **G4DYZ0000060** |
| ⚠ | TRANSFORMADOR DE RESPALDO | **ETS19AB2E6AG** |
| ⚠ | FUSIBLE PRIMARIO | **K5D802APA008** |
| ⚠ | ZNR | **ERZV05Z471CS** |
| ⚠ | CAPACITOR DE AC | **F1BAF1020020** |
| ⚠ | CAPACITOR DE AC | **F0CAF224A105** |
| ⚠ | CAPACITOR DE AC | **F0CAF104A105** |
| ⚠ | CAPACITOR DE AC | **F1BAF471A013** |
| ⚠ | OPTOACOPLADOR | **B3PBA0000579** |
| ⚠ | PCB SMPS ✧ | **RJB3568A**<br>**RJB3568A-1** |
| ⚠ | BOBINA PRIMARIO | **G0B932H00002** |
| ⚠ | GAB. MET. SIN DOBLAR | **RKMX1011Z-KL** |
| ⚠ | BRS1C CD UNIT | **RD-DDL100-PX** |
| ⚠ | REAR PANEL | **RXTM0002H-A** |
| ⚠ | INSTRUCTIVO | ~~RQTM0189~~<br>RQTM0189-1 |
| ⚠ | OPTOACOPLADOR | **B3PBA0000503** |

Nota: El Optoacoplador B3PBA0000503 cambiara por el B3PBA0000597 con la TI A12031 Running Change

✧ La pista de SMPS Cambiara Con la TI A12037 de RJB3568A a RJB3568A -1 ( Running Change )

# 2 Warning

## 2.1. Prevention of Electrostatic Discharge (ESD) to Electrostatic Sensitive (ES) Devices

Some semiconductor (solid state) devices can be damaged easily by static electricity. Such components commonly are called Electrostatically Sensitive (ES) Devices. Examples of typical ES devices are integrated circuits and some field-effect transistors and semiconductor "chip" components. The following techniques should be used to help reduce the incidence of component damage caused by electrostatic discharge (ESD).

1. Immediately before handling any semiconductor component or semiconductor-equipped assembly, drain off any ESD on your body by touching a known earth ground. Alternatively, obtain and wear a commercially available discharging ESD wrist strap, which should be removed for potential shock reasons prior to applying power to the unit under test.
2. After removing an electrical assembly equipped with ES devices, place the assembly on a conductive surface such as aluminum foil, to prevent electrostatic charge buildup or exposure of the assembly.
3. Use only a grounded-tip soldering iron to solder or unsolder ES devices.
4. Use only an anti-static solder removal device. Some solder removal devices not classified as “anti-static (ESD protected)” can generate electrical charge sufficient to damage ES devices.
5. Do not use freon-propelled chemicals. These can generate electrical charges sufficient to damage ES devices.
6. Do not remove a replacement ES device from its protective package until immediately before you are ready to install it. (Most replacement ES devices are packaged with leads electrically shorted together by conductive foam, aluminum foil or comparable conductive material).
7. Immediately before removing the protective material from the leads of a replacement ES device, touch the protective material to the chassis or circuit assembly into which the device will be installed.

   **Caution:**

   Be sure no power is applied to the chassis or circuit, and observe all other safety precautions.
8. Minimize bodily motions when handling unpackaged replacement ES devices. (Otherwise harmless motion such as the brushing together of your clothes fabric or the lifting of your foot from a carpeted floor can generate static electricity (ESD) sufficient to damage an ES device).

## 2.2. Precaution of Laser Diode

**CAUTION:**
THIS PRODUCT UTILIZES A LASER.
USE OF CONTROLS OR ADJUSTMENTS OR PERFORMANCE OF PROCEDURES OTHER THAN THOSE SPECIFIED HEREIN MAY RESULT IN HAZARDOUS RADIATION EXPOSURE.

**Caution:**

This product utilizes a laser diode with the unit turned “on”, invisible laser radiation is emitted from the pickup lens.
Wavelength: 790 nm (CD)
Maximum output radiation power from pickup: 100 μW/VDE
Laser radiation from the pickup unit is safety level, but be sure the followings:

1. Do not disassemble the pickup unit, since radiation from exposed laser diode is dangerous.
2. Do not adjust the variable resistor on the pickup unit. It was already adjusted.
3. Do not look at the focus lens using optical instruments.
4. Recommend not to look at pickup lens for a long time.

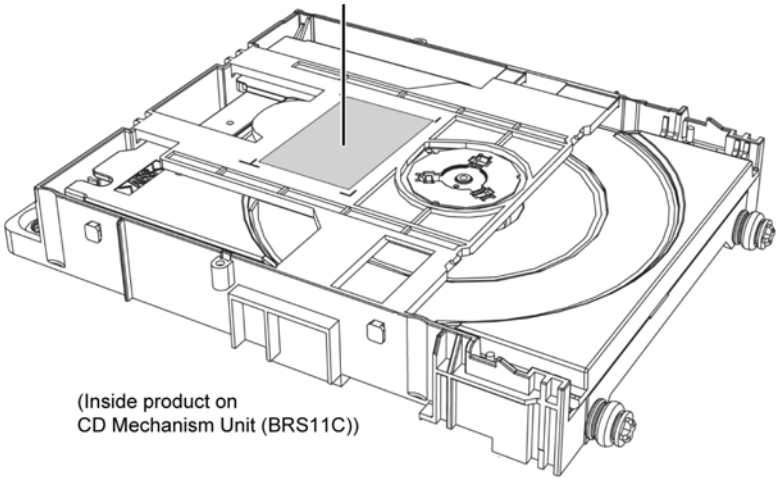

## 2.3. Service caution based on Legal restrictions

### 2.3.1. General description about Lead Free Solder (PbF)

The lead free solder has been used in the mounting process of all electrical components on the printed circuit boards used for this equipment in considering the globally environmental conservation.

The normal solder is the alloy of tin (Sn) and lead (Pb). On the other hand, the lead free solder is the alloy mainly consists of tin (Sn), silver (Ag) and Copper (Cu), and the melting point of the lead free solder is higher approx.30 degrees C (86°F) more than that of the normal solder.

**Definition of PCB Lead Free Solder being used**

| | |
|---|---|
| The letter of “PbF” is printed either foil side or components side on the PCB using the lead free solder.<br><br>(See right figure) | PbF |

**Service caution for repair work using Lead Free Solder (PbF)**

- The lead free solder has to be used when repairing the equipment for which the lead free solder is used.
  (Definition: The letter of “PbF” is printed on the PCB using the lead free solder.)
- To put lead free solder, it should be well molten and mixed with the original lead free solder.
- Remove the remaining lead free solder on the PCB cleanly for soldering of the new IC.
- Since the melting point of the lead free solder is higher than that of the normal lead solder, it takes the longer time to melt the lead free solder.
- Use the soldering iron (more than 70W) equipped with the temperature control after setting the temperature at 350±30 degrees C (662±86°F).

**Recommended Lead Free Solder (Service Parts Route.)**

- The following 3 types of lead free solder are available through the service parts route.
  RFKZ03D01K----------(0.3mm 100g Reel)
  RFKZ06D01K----------(0.6mm 100g Reel)
  RFKZ10D01K----------(1.0mm 100g Reel)

**Note**

* Ingredient: tin (Sn), 96.5%, silver (Ag) 3.0%, Copper (Cu) 0.5%, Cobalt (Co) / Germanium (Ge) 0.1 to 0.3%

## 2.4. Handling Precautions for Traverse Unit

The laser diode in the optical pickup unit may break down due to static electricity of clothes or human body. Special care must be taken avoid caution to electrostatic breakdown when servicing and handling the laser diode in the traverse unit.

### 2.4.1. Cautions to Be Taken in Handling the Optical Pickup Unit

The laser diode in the optical pickup unit may be damaged due to electrostatic discharge generating from clothes or human body. Special care must be taken avoid caution to electrostatic discharge damage when servicing the laser diode.

1. Do not give a considerable shock to the optical pickup unit as it has an extremely high-precise structure.
2. To prevent the laser diode from the electrostatic discharge damage, the flexible cable of the optical pickup unit removed should be short-circuited with a short pin or a clip.
3. The flexible cable may be cut off if an excessive force is applied to it. Use caution when handling the flexible cable.
4. The antistatic FPC is connected to the new optical pickup unit. After replacing the optical pickup unit and connecting the flexible cable, cut off the antistatic FPC.

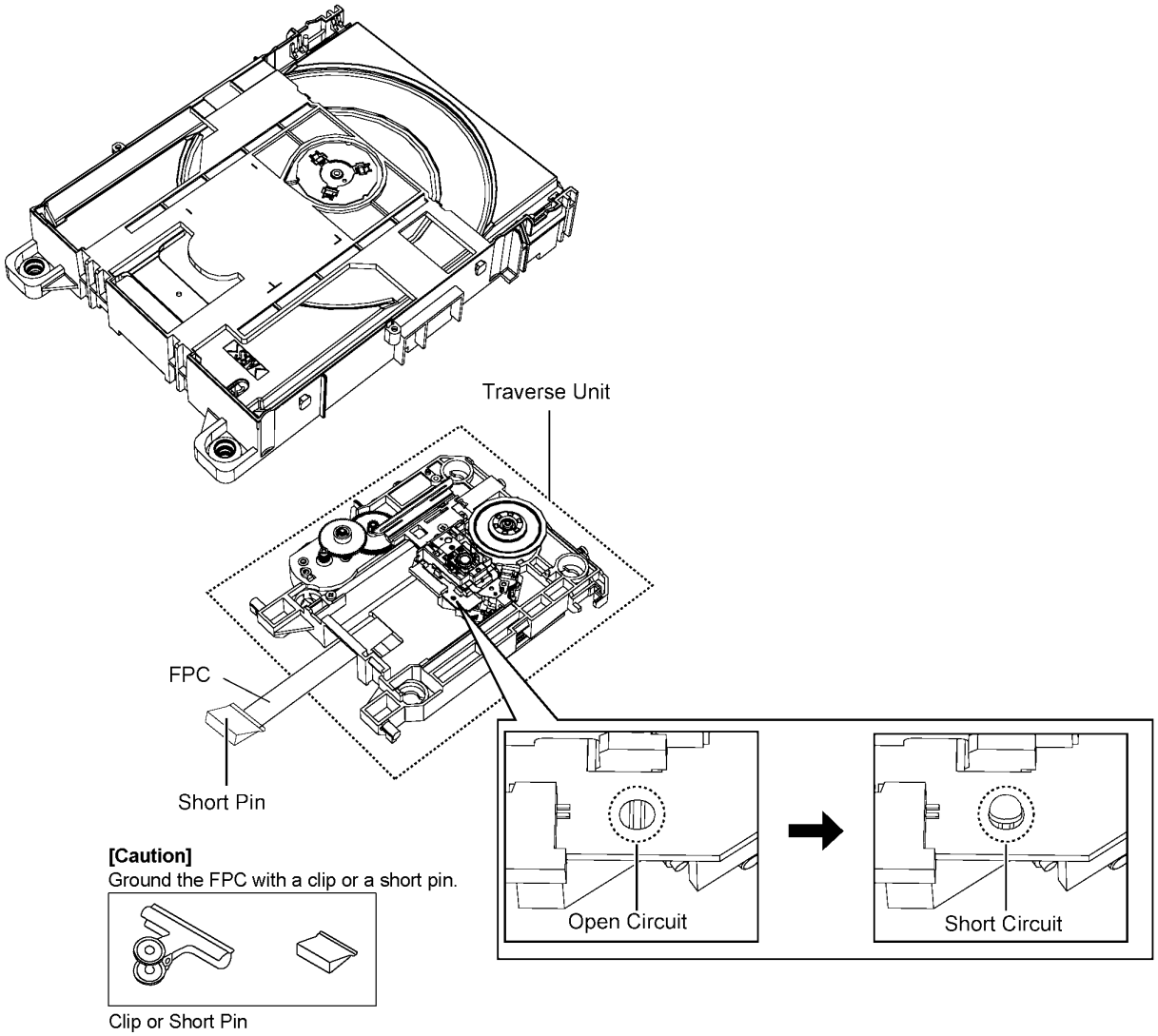


Figure A

## 2.4.2. Grounding for electrostatic breakdown prevention

Some devices such as the DVD player use the optical pickup (laser diode) and the optical pickup will be damaged by static electricity in the working environment. Proceed servicing works under the working environment where grounding works is completed.

### 2.4.2.1. Worktable grounding

1. Put a conductive material (sheet) or iron sheet on the area where the optical pickup is placed, and ground the sheet.

### 2.4.2.2. Human body grounding

1. Use the anti-static wrist strap to discharge the static electricity form your body.

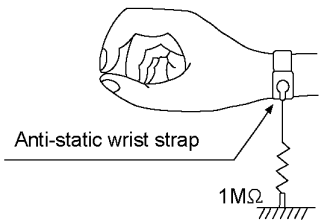


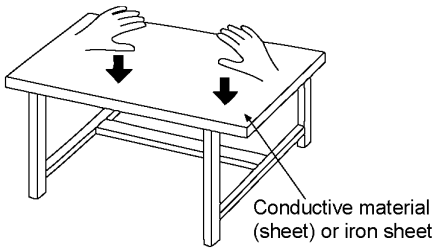

# 3 Service Navigation

## 3.1. Service Information

This service manual contains technical information which will allow service personnel's to understand and service this model. Please place orders using the parts list and not the drawing reference numbers.

If the circuit is changed or modified, this information will be followed by supplement service manual to be filed with original service manual.

- **CD Mechanism Unit (BRS11C):**

1) This model uses CD Mechanism Unit (BRS11C).

- **Micro-processor:**

1) The following components are supplied as an assembled part.
   - Micro-processor IC, IC2003 (MN101EF16KXW) Este material se encuentra sin programar, debe ser programado.

- **Speaker System:**

1) This model uses Speaker System, SB-AKX54, SB-WAKX74LM-K.

# 4 Specifications

## Sección del amplificador

AKX74

**Potencia de salida RMS en modo estéreo**

Canal frontal alto (ambos canales controlados)
145 W por canal (5 Ω), 1 kHz, 10% THD
190 W por canal (5 Ω), 1 kHz, 30% THD

Canal frontal bajo (ambos canales controlados)
180 W por canal (4 Ω), 1 kHz, 10% THD
235 W por canal (4 Ω), 1 kHz, 30% THD

Subwoofer Ch
250 W por canal (8 Ω), 100 Hz, 10% THD
300 W por canal (8 Ω), 100 Hz, 30% THD

Potencia total RMS del modo estéreo
900 W (10% THD)
1150 W (30% THD)

**Potencia de salida PMPO** 12700 W

## Sección del sintonizador, terminales

**Emisoras preconfiguradas** 30 emisoras de FM
15 emisoras de AM

**Modulación de frecuencia (FM)**

Gama de frecuencias
87,5 MHz a 108,0 MHz (en pasos de 100 kHz)
87,9 MHz a 107,9 MHz (en pasos de 200 kHz)

Terminales de la antena 75 Ω (desbalanceado)

**Modulación de amplitud (AM)**

Gama de frecuencias
520 kHz a 1710 kHz (en pasos de 10 kHz)

**Toma de micrófono**

Sensibilidad 0,7 mV, 1,1 kΩ
Terminal Mono, toma de 3,5 mm (1 sistema)

**Puerto de música (frontal)**

Sensibilidad 100 mV, 4,7 kΩ
Terminal Estéreo, toma de 3.5 mm

**Entrada AUX** Clavija jack RCA

## Sección de discos compactos

**Discos reproducidos (8 cm o 12 cm)**
CD, CD-R/RW (CD-DA, MP3※)

**Lector**

Longitud de onda 790 nm (CD)
Potencia de láser CLASS 1 (CD)

**Salida de audio (Disco)**

Número de canales
AKX74 2,1 canales (FL, FR, SW)
AKX54 2 canales (FL, FR)

FL = Canal frontal izquierdo
FR = Canal frontal derecho
SW = Canal de subwoofer

※ MPEG-1 Layer 3

## Sección de memoria

**Memoria**

Tamaño de la memoria 2 GB
Compatibilidad con formato de archivos de medios
MP3 (*.mp3)

**Cómo grabar en la memoria**

Velocidad de bits 128 kbps
Velocidad de grabación en la memoria
1x, 3x (CD solamente)
Formato de archivo de grabación MP3 (*.mp3)
Capacidad de total de canciones grabadas (Usa 128 kbps, aproximadamente 1 canción = 4 minutos) 510 canciones

## Sección de USB

**Puerto USB**

Estándar USB USB 2,0 velocidad total
Compatibilidad con formato de archivos de medios
MP3 (*.mp3)
Sistema de archivo de dispositivo USB
FAT12, FAT16, FAT32
Energía puerto USB 500 mA (máx.)
Velocidad de bits 16 kbps a 320 kbps (reproducción)

**Cómo grabar en el USB**

Velocidad de bits 128 kbps
Velocidad de grabación USB 1x, 3x (CD solamente)
Formato de archivo de grabación MP3 (*.mp3)

## Generalidades

**Fuente de alimentación** ~127 V, 60 Hz
**Consumo de energía**
132 W

**Dimensiones (An x Al x Prf)** 220 mm x 334 mm x 245 mm
**Peso** 3,4 kg

**Gama de temperaturas de funcionamiento**
0°C a +40°C

**Gama de humedades de funcionamiento**
35% a 80% humedad relativa (sin condensación)

**Consumo de energía en modo normal**

**132Wh/día (considerando 1 hora de uso al día).**

**Consumo de energía en modo de espera**

**4,6Wh/día (considerando 23 horas en modo de espera al día).**

**Nota:**

- Las especificaciones están sujetas a cambios sin previo aviso.
  El peso y las dimensiones son aproximados.
- La distorsión armónica total se mide con el analizador de espectro digital.

# 5 General/Introduction

## 5.1. Media Information

**NOTE on MP3**

- Files are treated as tracks and folders are treated as albums.
- This unit can access up to 999 tracks, 255 albums and 20 sessions.
- Disc must conform to ISO9660 level 1 or 2 (except for extended formats).
- To play in a certain order, prefix the folder and file names with 3-digits numbers in the order you want to play them.

**Limitations on MP3 play**

- If you have recorded MP3 on the same disc as CD-DA, only the format recorded in the first session can be played.
- Some MP3s may not be played due to the condition of the disc or recording.
- Recordings will not necessarily be played in the order you recorded them.

**NOTE on CDs**

- This unit can access up to 99 tracks.
- This unit can play MP3 files and CD-DA format audio CD-R/RW that have been finalized.
- It may not be able to play some CD-R/RW due to the condition of the recording.
- Do not use irregularly shaped disc.
- Do not use disc with labels and stickers that are coming off or with adhesive exuding from under labels and stickers.
- Do not attach extra labels or stickers on the disc.
- Do not write anything on the disc.

**NOTE on USB**

**Compatible devices**

- USB mass storage devices that support bulk-only transfer.
- USB mass storage devices that support USB 2.0 full speed.

**Supported format**

- Folders are defined as album.
- Files are defined as track.
- Track must have the extension ".mp3" or ".MP3".
- CBI (Control/Bulk/Interrupt) is not supported.
- NTFS file system is not supported. (only FAT 12/16/32 file system is supported).
- Some files can fail to work because of the sector size.

**Note:**

- Maximum album: 255 albums (include albums without MP3 tracks).
- Maximum track: 2500 tracks
- Maximum track in one album: 999 tracks

# 6 Location of Controls and Components

## 6.1. Remote Control Key Button Operation

❶ **Standby/on switch** [⏻], [⏻/I]
Press to switch the unit from on to standby mode or vice versa. In standby mode, the unit is still consuming a small amount of power.

❷ Alphanumeric buttons
To select a 2-digit number
Example: 16: [≧10] → [1] → [6]
To set a character
Example: B: [2] → [2]

❸ Delete a programmed track
Delete a selected track in a playlist

❹ Select audio source

❺ Basic playback control

❻ Select the sound effects

❼ Start the title search for internal memory

❽ View content information
**Decrease the brightness of the display panel**
Press and hold the button to use this function.
To cancel, press and hold the button again.

❾ Recording operation control

❿ Set the play timer and record timer

⓫ Set the clock and timer

⓬ Set the sleep timer
**Automatically switch off the system**
When you are in disc, USB or internal memory source, the auto off function switches off the system if you do not use the system for 30 minutes.
Press and hold the button to use this function.
To cancel, press and hold the button again.

⓭ Set the program function

⓮ Adjust the volume of the system

⓯ **Mute the sound of the system**
Press the button again to cancel.
"MUTE" is also canceled when you adjust the volume or when you switch off the system.

⓰ Set the play menu item
Set the radio menu item

⓱ Make playlist for internal memory

⓲ Select the option

⓳ Set the edit mode for USB and internal memory

## 6.2. Main Unit Key Button Operation

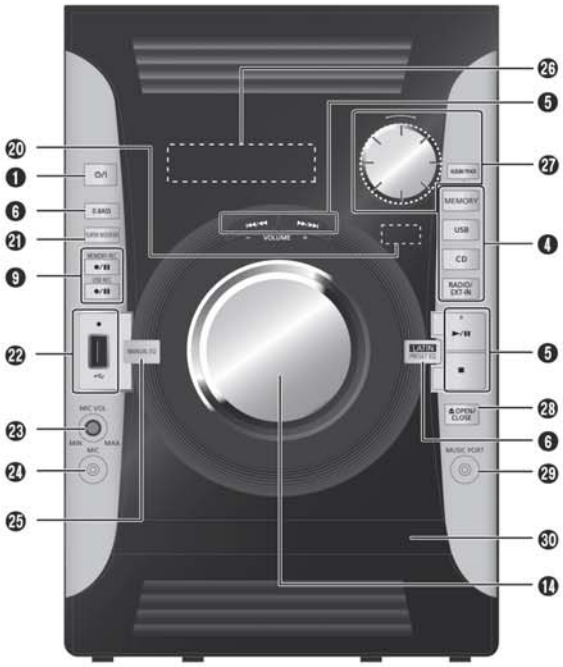


❶ **Standby/on switch** [⏻], [⏻/I]
Press to switch the unit from on to standby mode or vice versa. In standby mode, the unit is still consuming a small amount of power.

❹ Select audio source

❺ Basic playback control

❻ Select the sound effects

❾ Recording operation control

⓮ Adjust the volume of the system

⓴ Remote control sensor

㉑ Set Super Woofer function

㉒ USB port (⭠)
USB recording indicator

㉓ Adjust the volume of the microphone

㉔ Microphone jack

㉕ Select the bass, mid or treble effect

㉖ Display panel

㉗ **Browse tracks or albums**

(CD)
Turn the knob to browse the track.
Press [▶/❚❚] to start playback from the selection.

(MP3)
Press [ALBUM/TRACK] to select album or track and then turn the knob to browse.
Press [▶/❚❚] to start playback from the selection.

㉘ Open or close the disc tray

㉙ Music port jack

㉚ Disc tray

# 7 Installation Instructions

## 7.1. Speaker and A/C Connection

### Making the connections

**Conserving power**
The system consumes approximately 0.3 W when it is in standby mode. Disconnect the power supply if you do not use the system.
Some settings will be lost after you disconnect the system. You have to set them again.

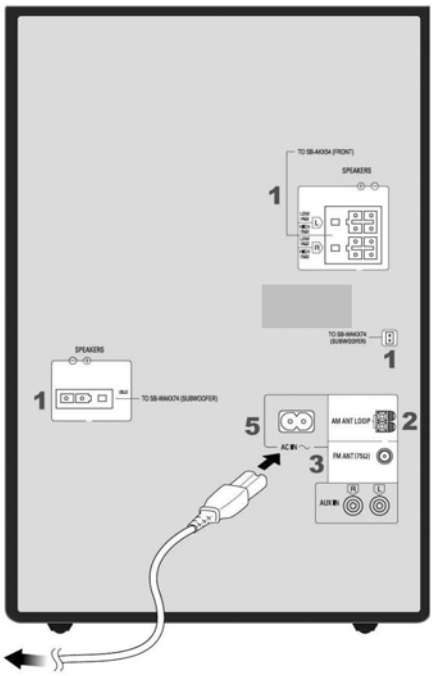


**1 Connect the speakers.**
***Front speakers***

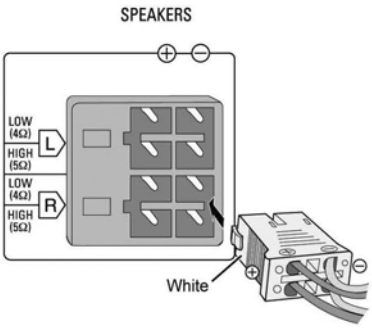


***Subwoofer***

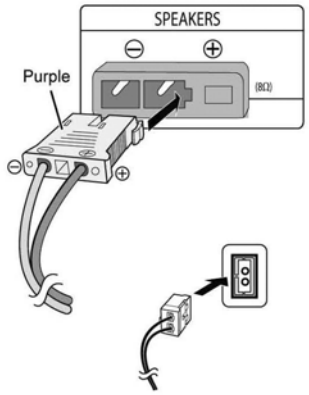


**2 Connect the AM loop antenna.**
Stand the antenna up on its base until it clicks.

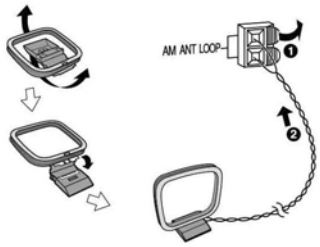


**3 Connect the FM indoor antenna.**
Place the antenna where reception is best.

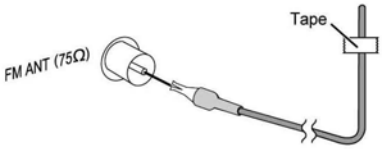


**4 Set the voltage.**

Use a flat-head screwdriver to set the voltage selector to the AC voltage in your area.

**5 Connect the AC power supply cord.**

# 8 Service Mode

## 8.1. Cold-Start

Here is the procedure to carry out cold-start or initialize to shipping mode.

1. Unplug AC power cord
2. Press & hold [POWER] button
3. Plug AC power cord while [POWER] button being pressed
   FL Display will show "_ _ _ _ _ _ _ _"
4. Release [POWER] button

## 8.2. Doctor Mode Table

### 8.2.1. Doctor Mode Table 1

| Item | | FL Display | Key Operation |
|---|---|---|---|
| Mode Name | Description | | Front Key |
| Doctor Mode | To enter into Doctor Mode | NO DISC | In CD Mode:<br>1. Press [■] button on main unit follow by [4] and [7] on remote control.<br>2. To exit, press [DELETE] button on remote control or, press [POWER, ⏻/I] button on Main Unit |
| EEPROM checksum check | Displaying of<br>1. Year Develop.<br>2. Model Type.<br>3. ROM Type.<br>4. Firmware Version. | 2U0 - YYY<br>① ② ③ ④ (Decimal)<br>Version No. (001 ~ 999) → specific for each firmware | In CD mode:<br>1. Enter Doctor Mode |
| Cold Start | To active cold start upon next AC power up when reset start is execute the next time . | -- -- -- -- -- -- -- -- | In Doctor Mode :<br>1. Press [SLEEP] button on remote control. |

## 8.2.2. Doctor Mode Table 2

| Item | | FL Display | Key Operation |
|---|---|---|---|
| Mode Name | Description | | Front Key |
| Volume Setting Check | To check the volume setting of a main unit. | VOL - 0 0 0<br>Volume<br>Press [7]: VOL50<br>Press [8]: VOL35<br>Press [9]: VOL0 | In Doctor Mode :<br>1. Press [7], [8], [9] button on remote control. |
| FL Display Check | To check the FL segment display<br>All segment will light up while all LED blink at 0.5s,intervals.(if any) | A.OFF SLEEP MONO 1ALBUM 1TR<br>USB DAB PGM RND | In Doctor mode :<br>1. Press [1] button on remote control.<br>2. To cancel, press [0 ] on remote control. |
| BRS11C Reliability Test (Traverse) | To determine CD Mechanism BRS11C Access Inner & Outer disc operation.<br>In this mode,ensure the CD is in the main unit.<br>Note: Refer to Section 8.3 Fig 2. for process flow . | 0000000000<br>The counter will increment by one . When reach 9999 will change to 0000<br>Cancellation Display<br>CANCEL | In Doctor Mode :<br>1. Press [10]→[1]→[2] button on remote control.<br>2. To cancel, press [0] on remote control. |
| BRS11C Reliability Test (Combination) | To determine CD Mechanism Unit (BRS11C) Open/Close & Access Inner & Outer Disc Operation.<br>In this mode,ensure the CD is in the main unit.<br>Note: Refer to Section 8.3 Fig 3. for process flow . | 0000000000<br>The counter will increment by one . When reach 9999 will change to 0000<br>Cancellation Display<br>CANCEL | In Doctor Mode :<br>1. Press [10]→[1]→[5] button on remote control.<br>2. To cancel, press [0] on remote control. |
| BRS11C Reliability Test (Loading) | To determine CD Mechanism Unit (BRS11C) Open/Close operation.<br>In this mode, the tray will open & close.<br>Note: Refer to Section 8.3 Fig 1 for process flow . | 0000000000<br>The counter will increment by one . When reach 9999 will change to 0000<br>Cancellation Display<br>CANCEL | In Doctor Mode :<br>1. Press [10]→[2]→[1] button on remote control.<br>2. To cancel, press [0] on remote control. |

## 8.2.3. Doctor Mode Table 3

| Item | | FL Display | Key Operation |
|---|---|---|---|
| Mode Name | Description | | Front Key |
| CD<br>Self- Adjustment<br>(AJST)<br>Result Display | i. Function: To display result of self-adjustment for CD .<br>• This is used for servicing and analysis. | 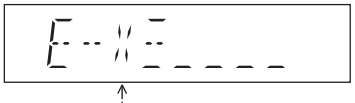 <br>Display of auto adjustment result<br><br>Reference table:<br>(ERROR Code / Status Condition)<br>0 1 2 4 6 8 A C E F<br>AOC1/AOC2: O ※ O O O O O O O -<br>ABC2/ABC1: O - X O X O X O X -<br>2nd AOC1: O - O X X O O X X -<br>FAGC/T AGC: O - O O O X X X X -<br>AGC2: O - O O O O O O O △<br><br>O: OK ;<br>X: NG (In case that time out happens.)<br>※ Either one of FO AOC, TR AOC and FO coarse AGC is NG .<br>△: If the AGC is NG (ignore others). | In Doctor Mode:<br>1. Press [10]→[1]→[4] button on remote control .<br><br>2. To cancel, press [0] on remote control . |
| CD LSI<br>Ve rsion Check | For checking CD LSI Version and checksum information. | 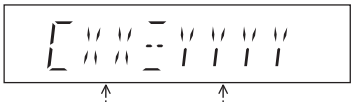 <br>Version (Decimal ) C hecksum (Hex)<br><br>(Display 1)<br> <br>ROM Version<br>after 2 sec<br>(Display 2)<br> 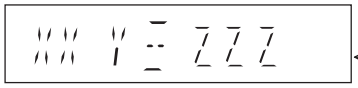 <br>Year Develop ROM Type Version (Decimal) | In Doctor Mode :<br>1. Press [4] button on remote control .<br><br>2. To cancel, press [0] on remote control . |

## 8.3. Reliability Test Mode (CD Mechanism Unit (BRS11C))

Below is the process flow chart of the aging test for the CD Mechanism Unit (BRS11C).

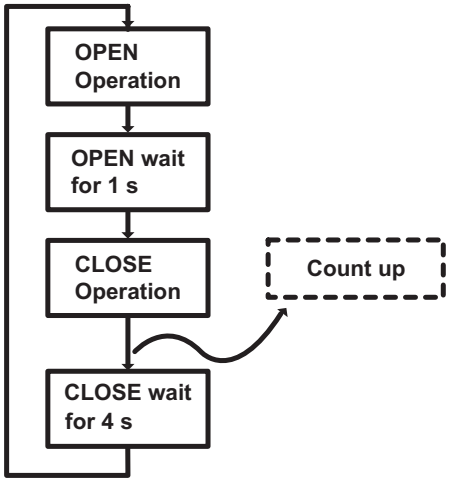


Fig. 1. Reliability Test (Loading)

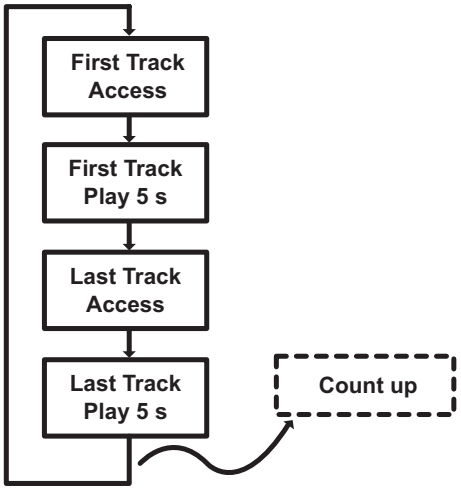


Fig. 2. Reliability Test (Traverse)

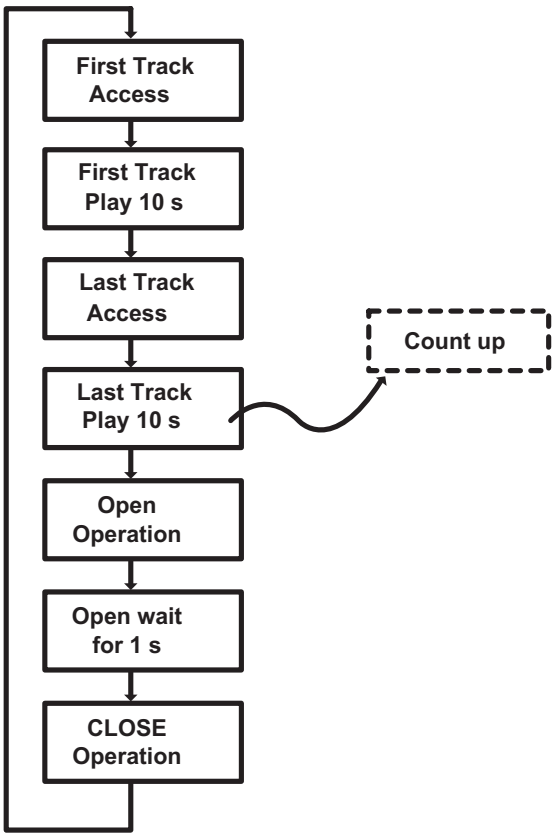


Fig. 3. Reliability Test (Combination)

## 8.4. Self-Diagnostic Mode

| Item | | FL Display | Key Operation |
|---|---|---|---|
| Mode Name | Description | | Front Key |
| Self Diagnostic Mode | To enter into self diagnostic checking | | Step 1: Select CD mode (Ensure no disc is inserted).<br><br>Step 2: Press & hold [■] follow by [▶▶/▶▶I] on main unit for 2 seconds. |
| Error code information | System will perform a check on any unusual/error code from the memory | Example: F26 | Step 1: In self diagnostic mode, Press [■] on main unit.<br><br>To exit, press [⏻/I] on main unit or remote control. |
| Delete error code | To clear the stored in memory (EEPROM IC) | CLEAR | Step 1: In self diagnostic mode, Press [0] on remote control.<br><br>To exit, press [⏻/I] on main unit or remote control. |

## 8.5. Self-Diagnostic Error Code Table

Self-Diagnostic Function (Refer Section 8.4. Self-Diagnostic Mode) provides information on any problems occurring for the unit and its respective components by displaying the error codes. These error code such as U**, H** and F** are stored in memory and held unless it is cleared.

The error code is automatically display after entering into self-diagnostic mode.

### 8.5.1. Power Supply Error Code Table

| Error Code | Diagnosis Contents | Description of error | Automatic FL Display | Remarks |
|---|---|---|---|---|
| F61 | Power Amp IC output abnormal | Upon power on, PCONT=HIGH, DC_DET_AMP after checking LSI. | F61 | Press [■] on main unit for next error. |
| F76 | | DC_DET_PWR | F76 | |
| F61-76 | | Both DCDET (NG) | F61-F76 | |
| F26 | | Communication between CD servo LSI and micro-P abnormal (iPod, Radio, USB) | F26 | |

### 8.5.2. CD Mechanism Error Code Table (CD Mechanism Unit (BRS11C))

| Error Code | Diagnostic Contents | Descriptionof error | Automatic FL Display | Remarks |
|---|---|---|---|---|
| CD H15 | CD Open Abnormal | During operation POS_SW_R On fail to be detected with 4 sec. Error No. shall be clear by force or during cold start. | CD H15 | Press [■] on main unit for next error. |
| CD H16 | CD Closing Abnormal | During operation POS_SW_CEN On fail to be detected with 4 sec. Error No. shall be clear by force or during cold start. | CD H16 | Press [■] on main unit for next error. |
| F26 | Communication between CD servo LSI and micro-p abnormal. | During switch to CD function, if SENSE = “L” within failsafe time of 20ms. | F26 | Press [■] on main unit for next error. |

## 8.6. Sales Demonstration Lock Function

### 8.6.1. Entering into sales Demo Mode

Here is the procedures to enter into Sales Demonstration Lock.
Step 1: Turn on the unit.
Step 2: Select to any mode function.
Step 3: Press [⏏OPEN/CLOSE] key then [▶/❚❚] key at the same time,press and hold both [⏏OPEN/CLOSE] and [▶/❚❚] keys for 5 sec.
Step 4: The display will show upon entering into this mode for 2 sec..

Note: [⏏OPEN/CLOSE] button is invalid and the main unit displays “LOCKED” while the lock function mode is entered.

### 8.6.2. Cancellation

Step 1: Turn on the unit.
Step 2: Select to any mode function.
Step 3: Press [⏏OPEN/CLOSE] key then [▶/❚❚] key at the same time,press and hold both [⏏OPEN/CLOSE] and [▶/❚❚] keys for 5 sec.
Step 4: The display will show upon entering into this mode for 2 sec..

# 9 Troubleshooting Guide

## 9.1. Part Location

### 9.1.1. SMPS P.C.B.

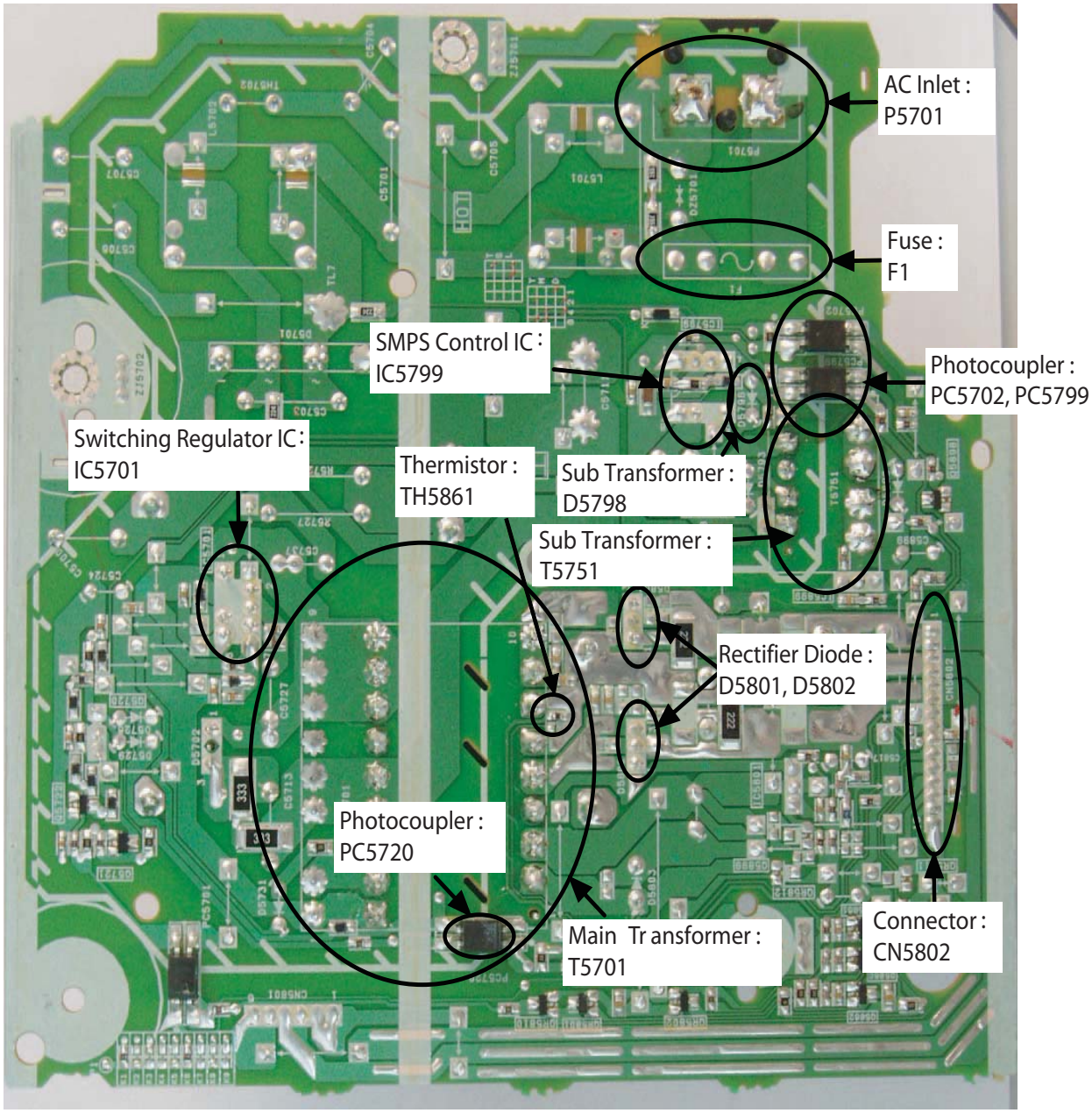


Fig. 1 SMPS P.C.B.

### 9.1.2. Main P.C.B. (Front Side)

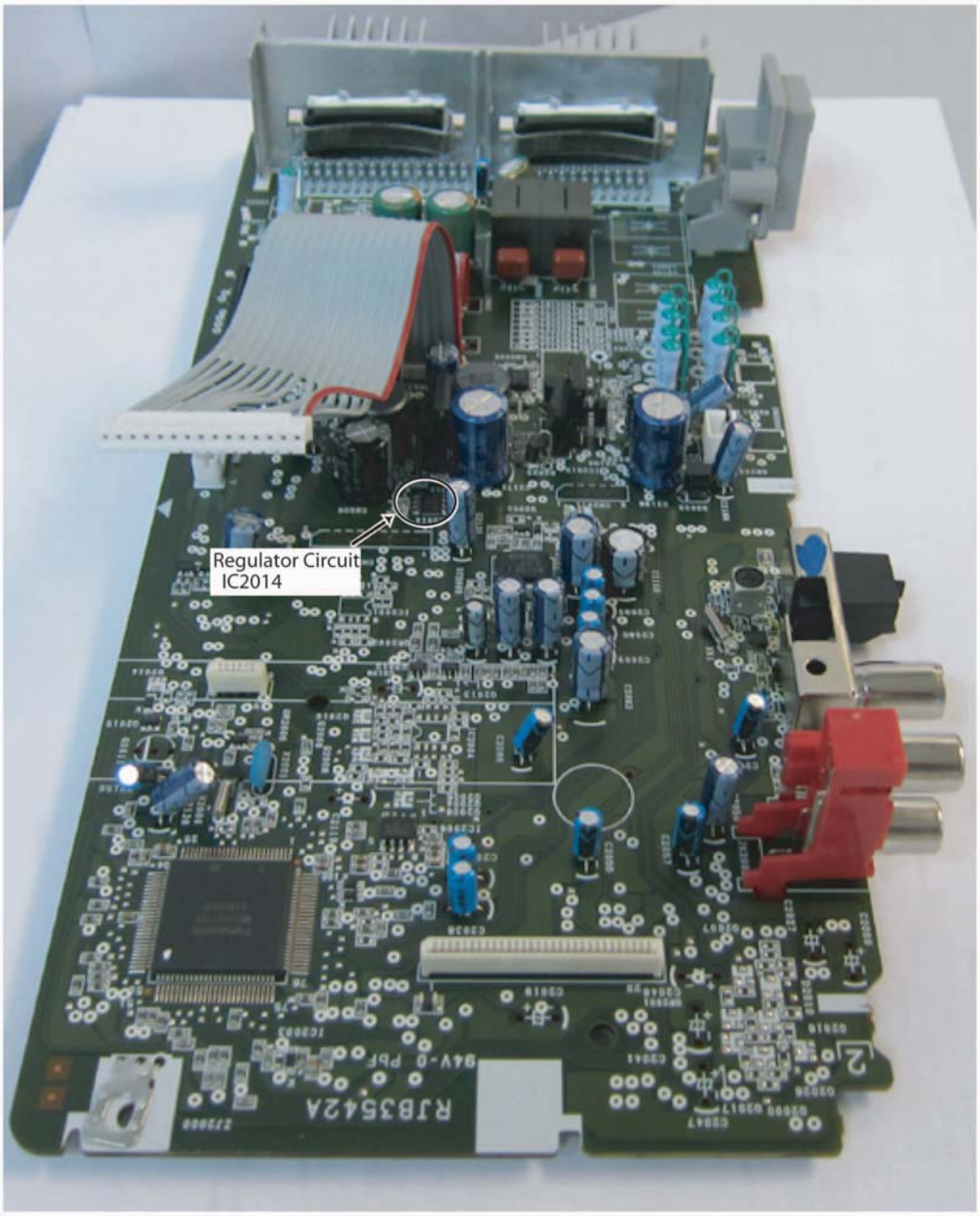


Fig. 2 Main P.C.B. (Front Side)

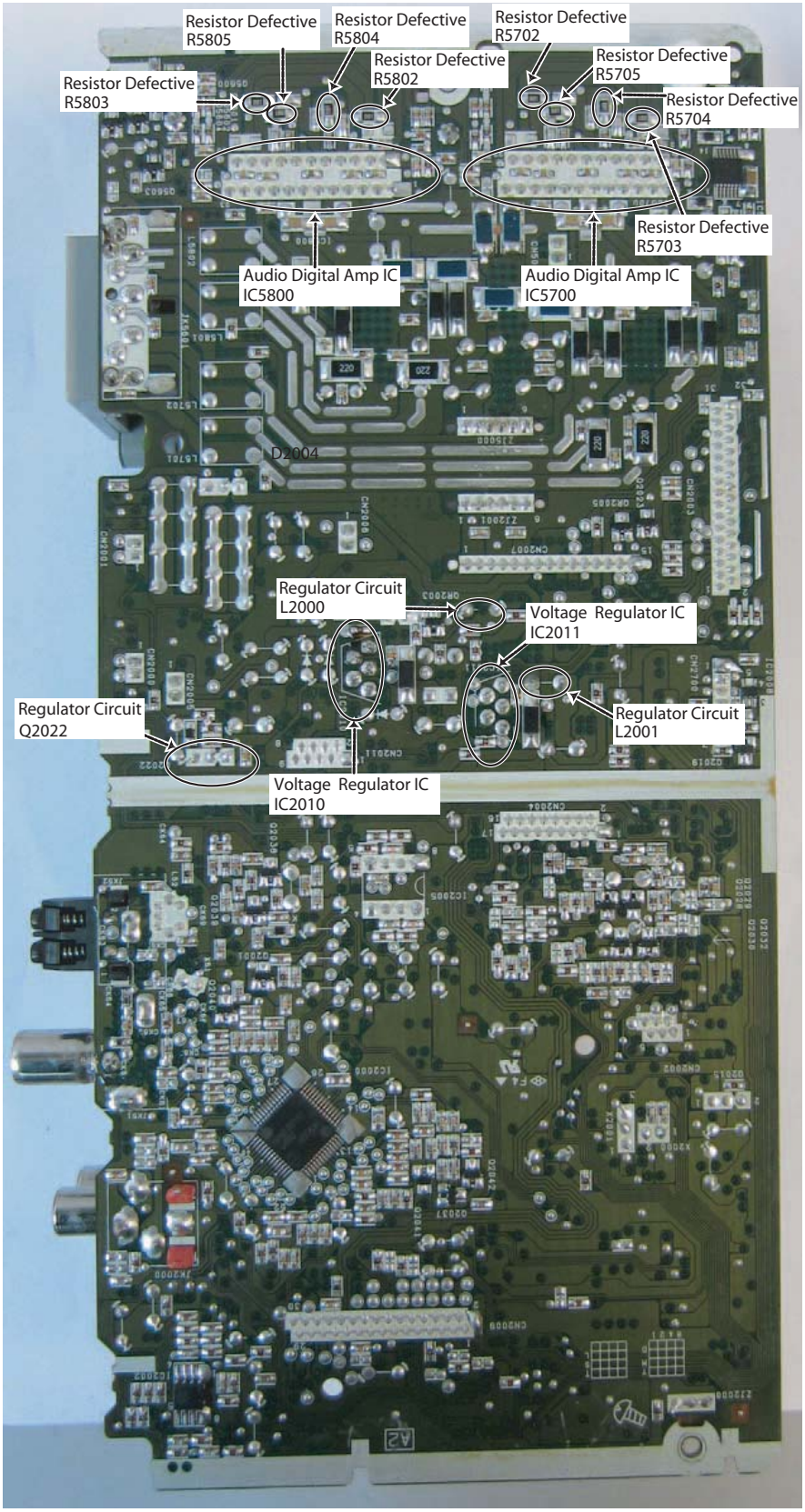


Fig. 3 Main P.C.B. (Back Side)

### 9.1.3. D-AMP P.C.B.

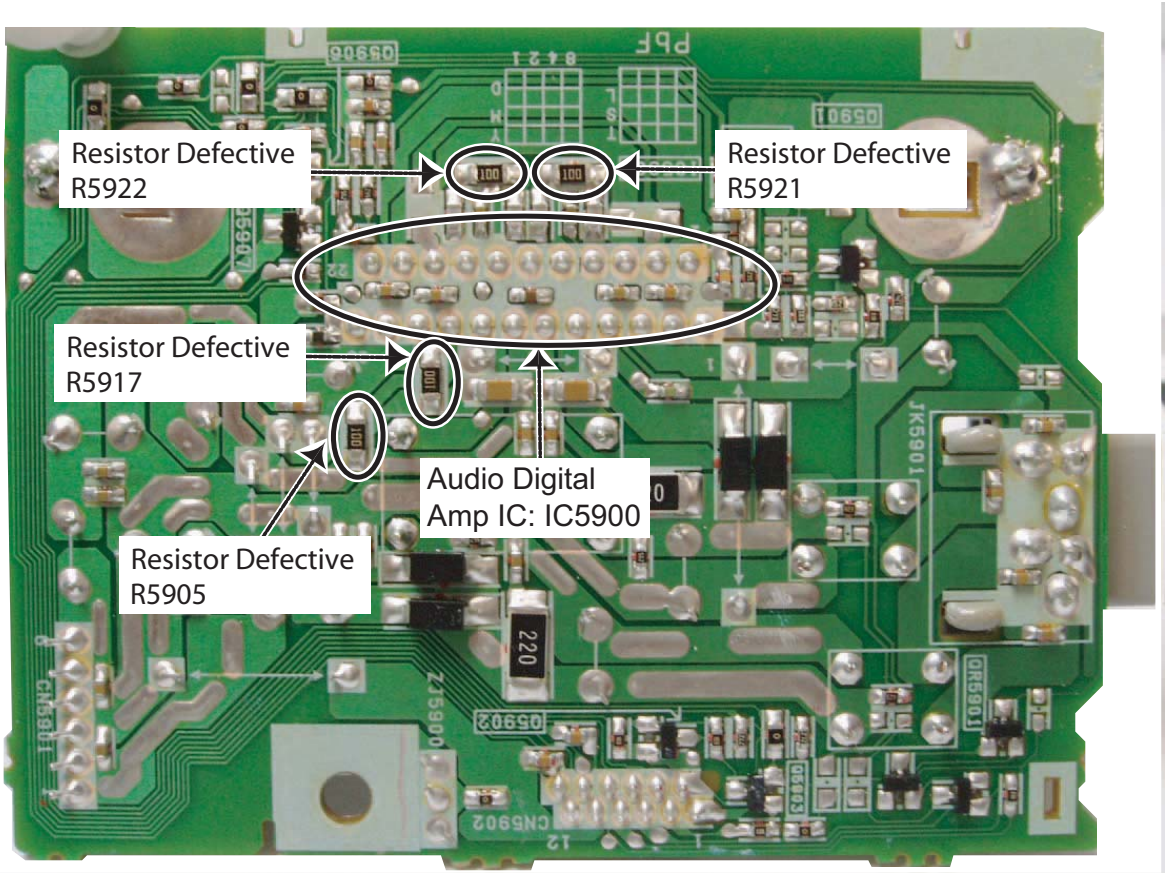


Fig. 4 D-Amp P.C.B.

## 9.2. Troubleshooting Guide for F61 and/or F76

This section illustrates the checking procedures when upon detecting the error of “F61” and/or “F76” after power up of the unit. It is for purpose of troubleshooting and checking in SMPS, Main & D-Amp P.C.B.

| Symptom | | Checking Items | | Possible Fault(s) | Remarks |
|---|---|---|---|---|---|
| Set cannot ON | 1 | AC Cord | 1 | AC Cord Faulty, Loose connection. | Refer to Section 9.1.1 Fig. 1. SMPS P.C.B. |
| | 2 | AC Inlet, P5701 | 2 | P5701 solder crack, dry joint. | |
| | 3 | Fuse, F1 | 3 | Fuse, F1 Open . | |
| | 4 | Photocoupler | 4 | PC5702/PC5799 solder crack. | |
| | | PC5702, PC5799 | | Dry joint, short circuit, open circuit. | |
| | 5 | Switching Regulator | 5 | IC5701 Faulty . | |
| | | IC, IC5701 | | | |
| | 6 | Main Transformer T5751 | 6a | T5751 Faulty. | |
| | | | 6b | Switching Mode Power Supply Control IC (IC5799) faulty. | |
| | | | 6c | D5798 faulty. | |
| | | | | | |
| Set can ON then F61 | 1 | Speaker Output | 1 | Faulty speaker unit, Loose connection, Short. | Refer to Section 9.1.2 Fig. 3. Main P.C.B. and Section 9.1.3 Fig. 4. D-Amp P.C.B. |
| | | | | | |
| | 2 | D-AMP circuit | 2a | D-AMP IC, IC5700, IC5800, IC5900 defective. | |
| | | | | (Check DC voltage at speaker terminals, 3V and above defective) | |
| | | | 2b | DC Voltage ok but no sound, check DC Voltage at Pin 1 . | |
| | | | | 5V ok condition, 2.5V or 0V defective. | |
| | | | 2c | 2a, 2b ok but no sound, check PWM waveform at Pin 10 and Pin 14 . | |
| | | | | If no PWM, 12 resistors defective. | |
| | | | | For IC5700 (R5702, R5703, R5704, R5705). | |
| | | | | For IC5800 (R5802, R5803, R5804, R5805). | |
| | | | | For IC5900 (R5905, R5917, R5921, R5922). | |
| | | | | | |
| Set can ON then F76 | 1 | Main Transformer T5701 | 1a | Short circuit between Pin 11 and Pin 12 . | Refer to Section 9.1.1 Fig. 1. SMPS P.C.B. |
| | | | 1b | Short circuit between Pin 13 and Pin 14 . | |
| | | | 1c | Short circuit between Pin 16 and Pin 17 . | |
| | | | | | |
| | 2 | Regulator Circuits | 2a | IC2010 faulty (No +9V output). | Refer to Section 9.1.2 Fig. 2. and Fig.3. Main P.C.B. |
| | | | 2b | L2000 Open. | |
| | | | 2c | Q2022 faulty (No +5V output). | |
| | | | 2d | IC2014 faulty (No +3.3V output). | |
| | | | 2e | IC2011 faulty (No +5V output). | |
| | | | 2f | L2001 Open. | |
| | | | | | |
| | 3 | Photocoupler | 3 | PC5720 solder crack, | Refer to Section 9.1.1 Fig. 1. SMPS P.C.B. |
| | | PC5720 | | Dry joint, short circuit, open circuit. | |
| | | | | | |
| Set can ON working normally for some time then F76 | 1 | Rectifier Diode D5801 | 1a | Improper contact between D5801 to Heatsink. | Refer to Section 9.1.1 Fig. 1. SMPS P.C.B. |
| | | Rectifier Diode D5802 | | Improper contact between D5802 to Heatsink. | |
| | 2 | Thermistor TH5860, | 1b | Set trigger temperature protection. | |
| | | TH5861 | | | |

## 9.3. D-Amp IC Operation & Control

**D-AMP IC Operation & Control**

1) D-AMP IC (C1AB0000497) was used for this model (AKX74).
2) Three control pins (signal send from micro-processor IC) were used to control the D-AMP IC operation such as muting, standby and normal operation. They are described as below: -

| No | Pin no | Signal name | Function |
|---|---|---|---|
| 1 | 4 | F_HOP | Frequency Hop control. |
| 2 | 6 | MODE_DA | Digital Amp On/Off control. |
| 3 | 3 | MUTE_F | Digital Amp Muting control |

**Table 1: Digital AMP Pin Control.**

Here is detailed description of the three control pins for the D-AMP IC

A) **MODE_DA** & **MUTE_F** were used to switch the D-AMP IC in the following muting status:

- L(Low/OFF): Standby / OFF
- H (High/ON): Operating or Mute

Below is the logic for the two pins used for the control of the D-AMP IC.

| No | MODE_DA | MUTE_F | Digital AMP IC mode status |
|---|---|---|---|
| 1 | L | X | OFF (0V) |
| 2 | H | H | Mute (2.5V) |
| 3 | H | L | Operating(5V) |

**Table 2:** Digital AMP IC Mode Status.

Note: Standby/OFF condition of D.AMP IC is available / activated only during the following event: Switching of Frequency Hoping, power off and start up (when the unit is undergoing the transition from standby to normal operation mode)

B) **F_HOP** is used to control the D-AMP operation to avoid interference with AM source by controlling the frequency source used. It will switch from one frequency to the other, depending on the tuned AM frequency.

For 9 KHz Step

| AM Band Frequency | F_HOP | Switching Frequency |
|---|---|---|
| 522 ~ 558 | H | 301 |
| 567 ~ 639 | H | 350 |
| 648 ~ 855 | L | 301 |
| 864 ~ 945 | H | 350 |
| 954 ~ 1152 | L | 301 |
| 1161 ~ 1242 | H | 350 |
| 1251 ~ 1449 | L | 301 |
| 1458 ~ 1539 | H | 350 |
| 1548 ~ 1629 | L | 301 |

**Table 3: F_HOP Control during 9 kHz Step**

For 10 KHz Step

| AM Band Frequency | F_HOP | Switching Frequency |
|---|---|---|
| 520 ~ 560 | H | 301 |
| 570 ~640 | H | 350 |
| 650 ~ 860 | L | 301 |
| 870 ~ 950 | H | 350 |
| 960 ~ 1160 | L | 301 |

| | | |
|---|---|---|
| 1170 ~ 1250 | H | 350 |
| 1260 ~ 1450 | L | 301 |
| 1460 ~ 1540 | H | 350 |
| 1550 ~ 1710 | L | 301 |

**Table 4: F_HOP Control during 10 kHz Step**

Note: During activating, the 3 control pins namely MUTE_F, MUTE_A and MODE_DA must be used to cover the "Pop" sound cause by F-HOP switching.

# 10 Service Fixture & Tools

Prepare service tools before process service position.

| Ref. No | Service Tools | | Remarks |
|---|---|---|---|
| SFT1 | Main P.C.B. (CN2007) - SMPS P.C.B. (CN5802) | REX1527(15P Cable Wire) | |

# 11 Disassembly and Assembly Instructions

- **Illustration is based on SA-AKX74PH-K.**

**Caution Note:**

- **This section describes the disassembly and/or assembly procedures for all major printed circuit boards & main components for the unit. (You may refer to the section of "Main components and P.C.B Locations" as described in the service manual)**
- **Before carrying out the disassembly process, please ensure all the safety precautions & procedures are followed.**
- **During the disassembly and/or assembly process, please handle with care as there may be chassis components with sharp edges.**
- **Avoid touching heatsinks due to its high temperature after prolong use. (See caution as described below)**

**CAUTION: HOT!!**
**PLEASE DO NOT**
**TOUCH THE HEAT SINK**

- **During disassembly and assembly, please ensure proper service tools, equipments or jigs is being used.**
- **During replacement of component parts, please refer to the section of "Replacement Parts List" as described in the service manual.**
- **Select items from the following indexes when disassembly or replacement are required.**
- Disassembly of Top Cabinet
- Disassembly of Front Panel Unit
- Disassembly of Mic P.C.B.
- Disassembly of Panel P.C.B.
- Disassembly of Memory LED P.C.B.
- Disassembly of Remote Sensor P.C.B.
- Disassembly of USB P.C.B.
- Disassembly of Music Port P.C.B.
- Disassembly of Top Bar LED P.C.B.
- Disassembly of Bottom Bar LED P.C.B.
- Disassembly of Main P.C.B.
- Replacement of Voltage Regulator (IC2010)
- Replacement of Voltage Regulator (IC2011)
- Replacement of Audio Digital Amp IC (IC5800)
- Replacement of Audio Digital Amp IC (IC5700)
- Disassembly of D-Amp P.C.B.
- Replacement of Audio Digital Amp (IC5900)
- Disassembly of SMPS P.C.B.
- Replacement of Switching Regulator IC (IC5701)
- Replacement of Rectifier Diode (D5702)
- Replacement of Rectifier Diode (D5801)
- Replacement of Rectifier Diode (D5802)
- Replacement of Rectifier Diode (D5803)
- Disassembly of CD Mechanism Unit (BRS11C)
- Disassembly of CD Interface P.C.B.
- Disassembly of CD Servo P.C.B.
- Disassembly of Rear Panel

**CAUTION NOTE:**
Please use original screw and at correct locations.

Below shown is part no. of different screw types used:

- ⓐ :RHD30007-K2J
- ⓑ :RHD30119-S
- ⓒ :RHD26046
- ⓓ :RHD30111-31
- ⓔ :XTB3+10JFJ
- ⓕ :RHDX30005-J
- ⓖ :RHDX031008

## 11.1. Disassembly Flow Chart

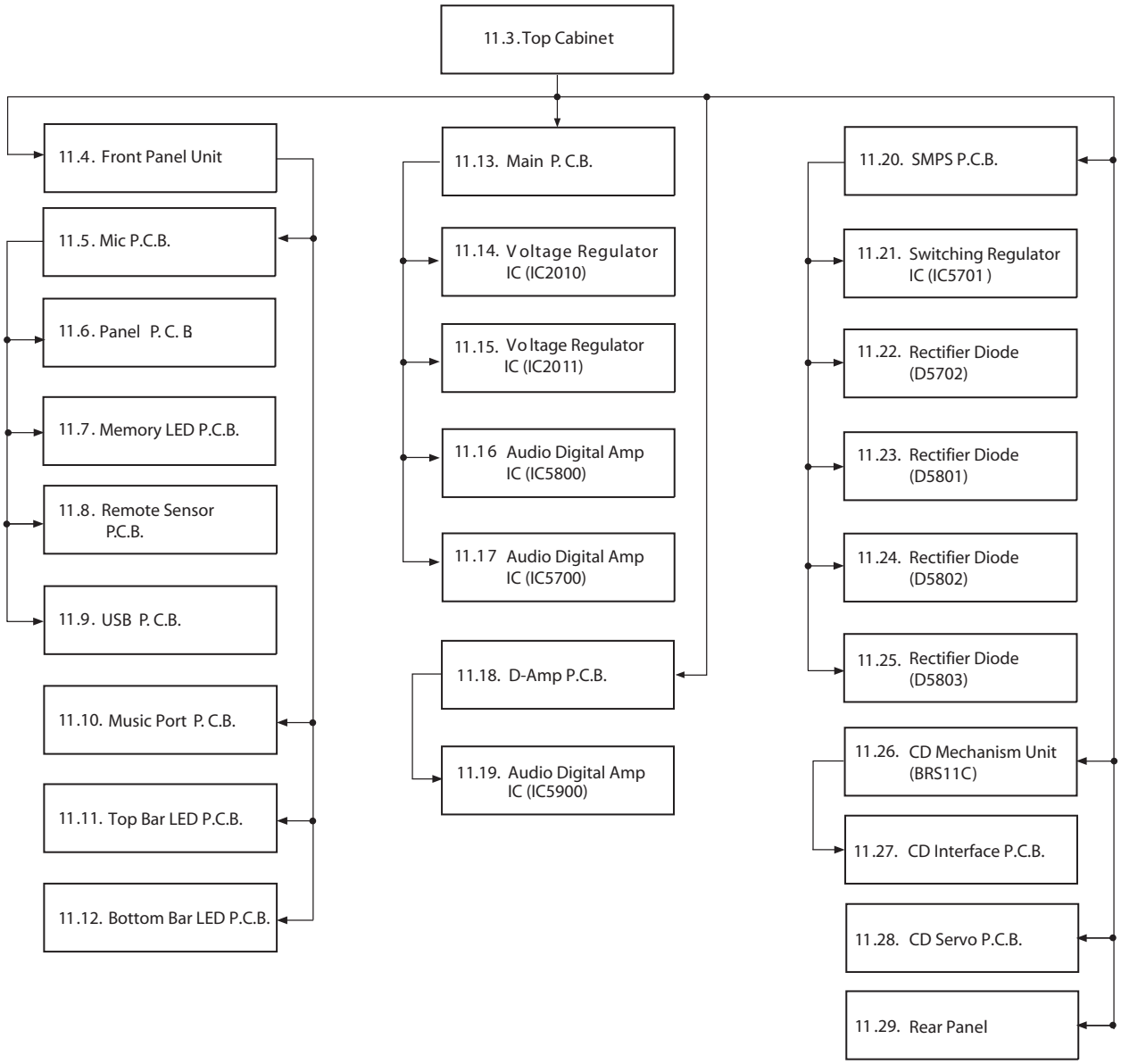

## 11.2. Main Components and P.C.B. Locations

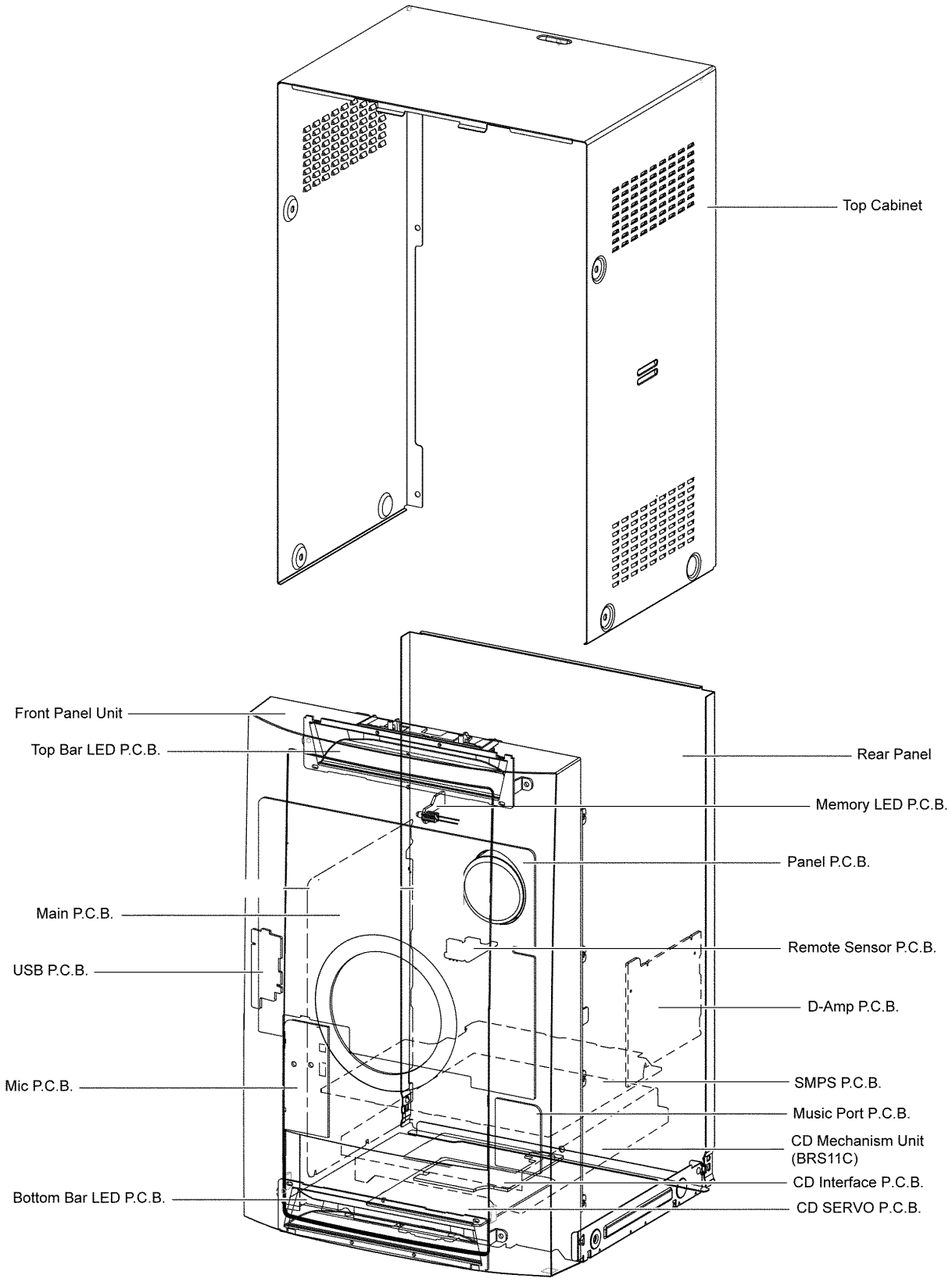

## 11.3. Disassembly of Top Cabinet

**Step 1** Remove 2 screws on each side.

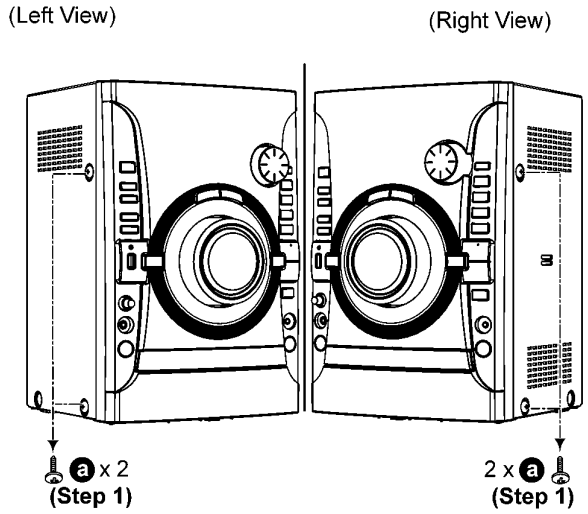


**Step 2** Remove 5 screws.
**Step 3** Slightly pull both side of Top Cabinet outwards as arrow shown.

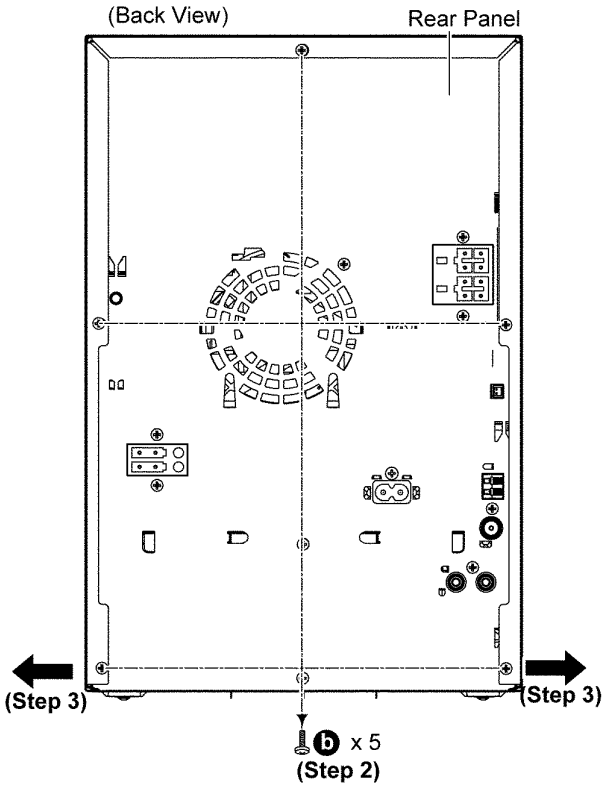


**Step 4** Slightly lift up both side of Top Cabinet in an outward direction as shown.
**Step 5** Remove the Top Cabinet.

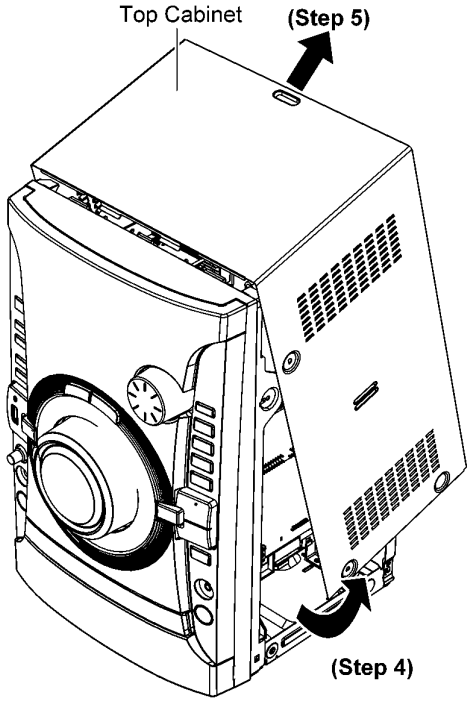


**Caution: During assembling, ensure that the catches of the Top Cabinet catches are properly located & inserted into the Front Panel Unit as shown.**

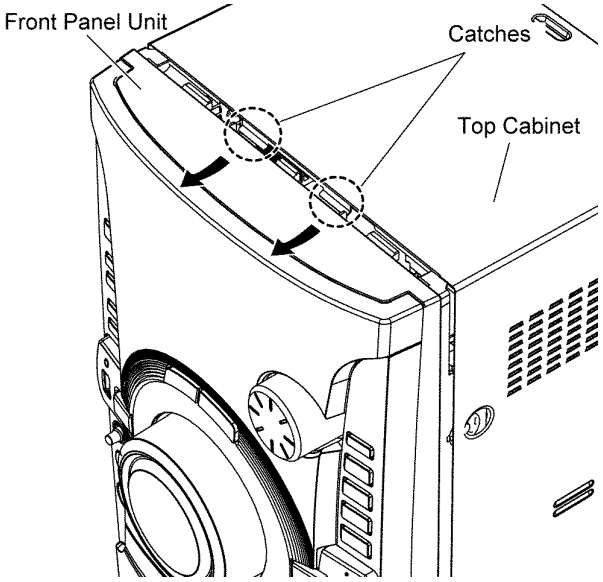

## 11.4. Disassembly of Front Panel Unit

- **Refer to "Disassembly of Top Cabinet".**

**Step 1** Detach 27P FFC at the connector (CN2003) on Main P.C.B.
**Step 2** Detach 5P Cable Wire at the connector (CN2700) on Main P.C.B.

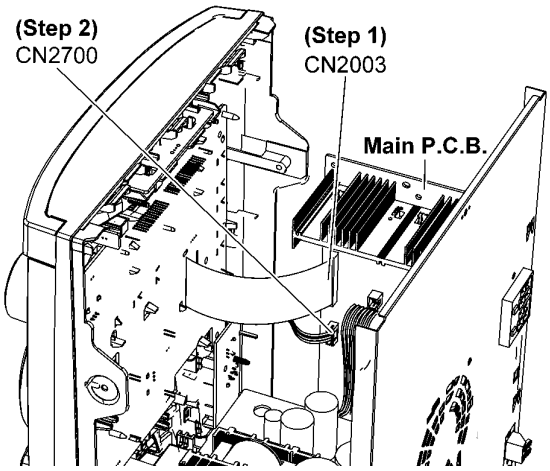


**Step 3** Remove 1 screw at the SMPS Inner Chassis Unit.

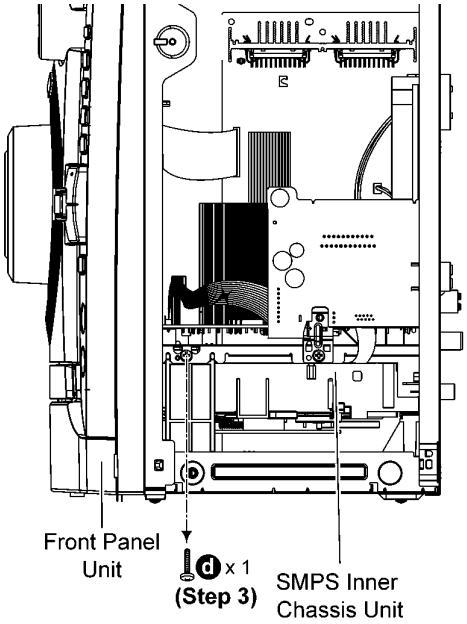


**Step 4** Push inwards slightly at the Bottom Chassis as arrow shown and release tab at left side of the Front Panel Unit.

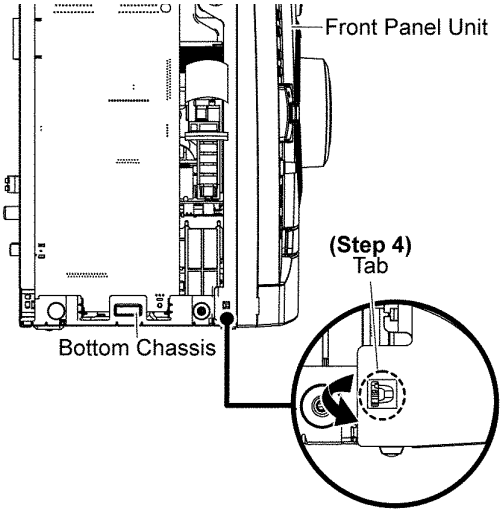


**Step 5** Release tabs at the bottom of the unit.

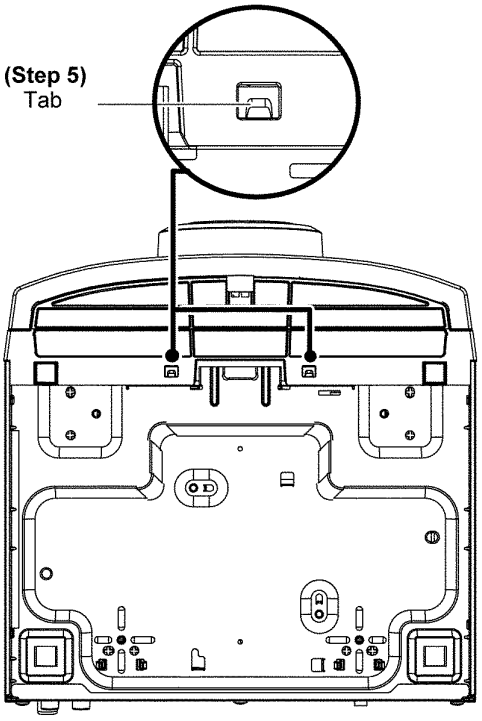

**Step 6** Push inwards slightly at the Bottom Chassis and release tab at right side of the Front Panel Unit.

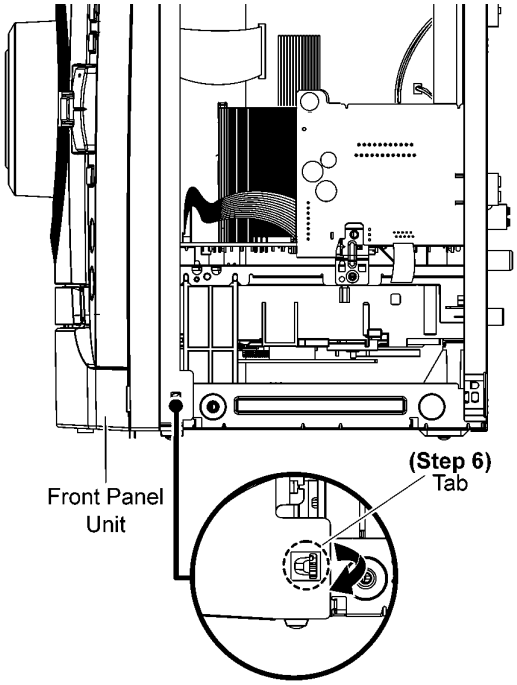


**Step 7** Remove the Front Panel Unit

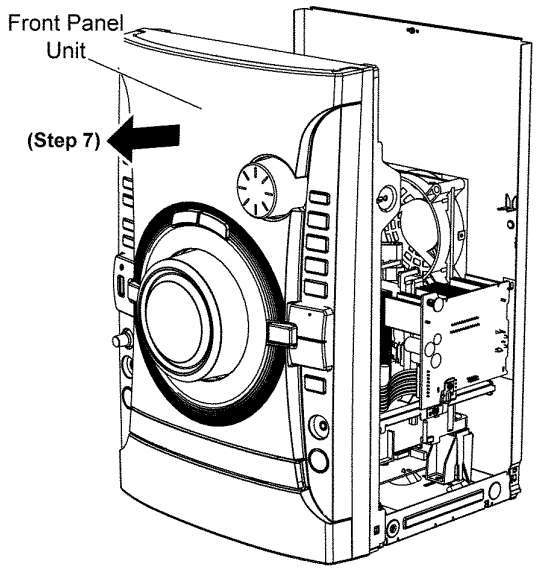


## 11.5. Disassembly of Mic P.C.B.

- **Refer to "Disassembly of Top Cabinet".**
- **Refer to "Disassembly of Front Panel Unit".**

**Step 1** Remove the Mic knob.

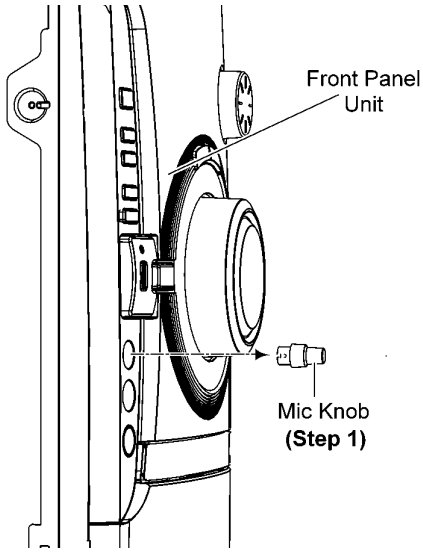


**Step 2** Remove 1 screw at the Mic P.C.B..
**Step 3** Desolder 4P Cable Wire at the connector (ZJ6500) at the Mic P.C.B..
**Step 4** Release 1 catch.
**Step 5** Remove the Mic P.C.B..

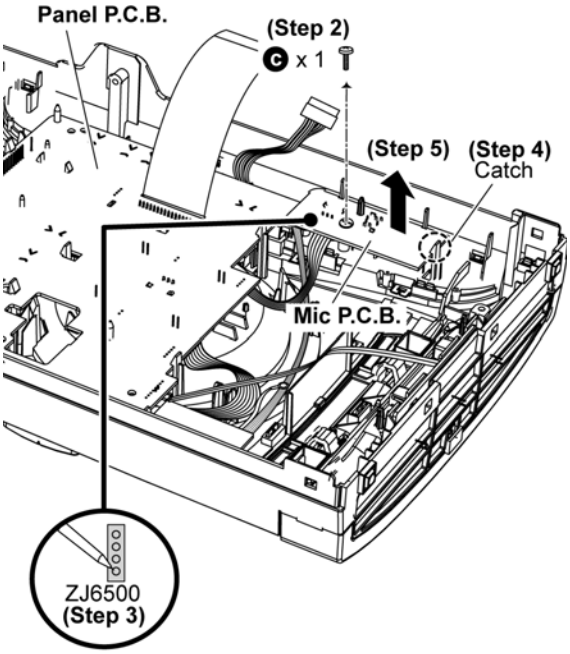

## 11.6. Disassembly of Panel P.C.B.

- **Refer to "Disassembly of Top Cabinet".**
- **Refer to "Disassembly of Front Panel Unit".**
- **Refer to "Disassembly of Mic P.C.B.".**

**Step 1** Remove the Volume Knob.
**Step 2** Remove the Skip Knob.

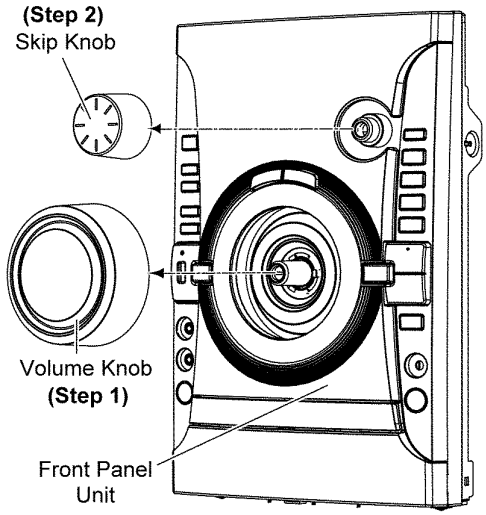


**Step 3** Remove 6 screws.
**Step 4** Detach 2P Cable Wire at the connector (CN6006) on the Panel P.C.B..
**Step 5** Detach 2P Cable Wire at the connector (CN6004) on the Panel P.C.B..

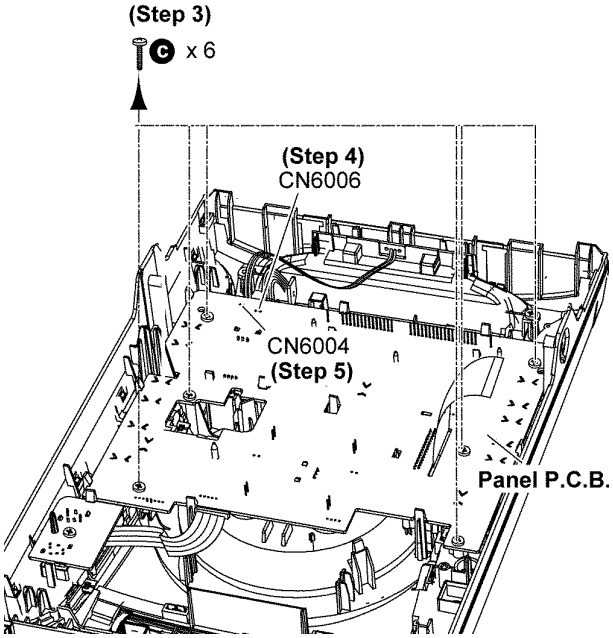


**Step 6** Release catches by following the sequences (1-11).

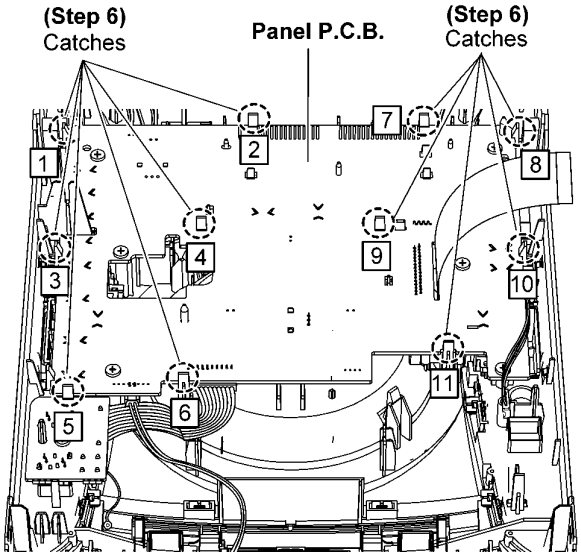


**Step 7** Lift up to remove the Panel P.C.B..

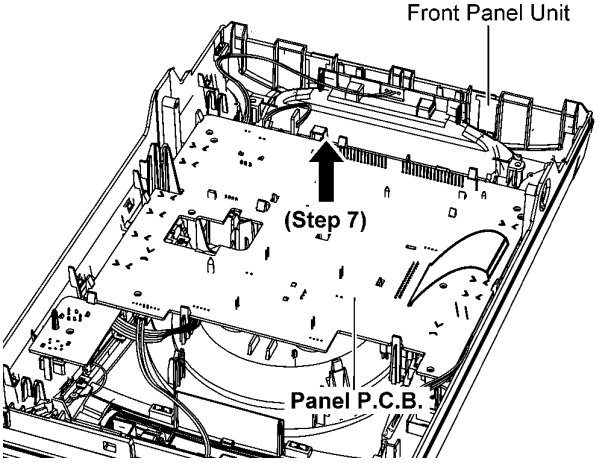


**Step 8** Desolder 4P Cable Wire at the connector (ZJ6002) on the Panel P.C.B..

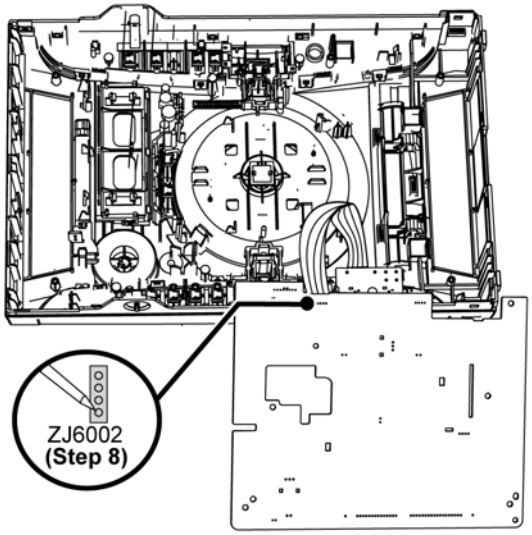

**Caution: During assembling, ensure that the Panel P.C.B. is seated properly through the guides & fully catched.**

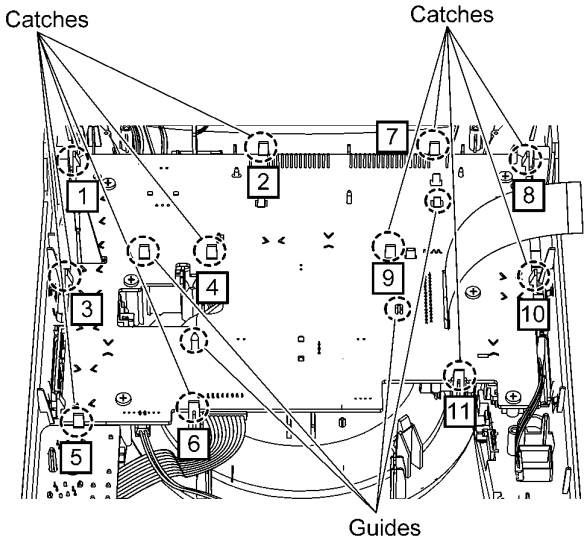


## 11.7. Disassembly of Memory LED P.C.B.

- **Refer to "Disassembly of Top Cabinet".**
- **Refer to "Disassembly of Front Panel Unit".**
- **Refer to "Disassembly of Panel P.C.B.".**

**Step 1** Release 2 catches.

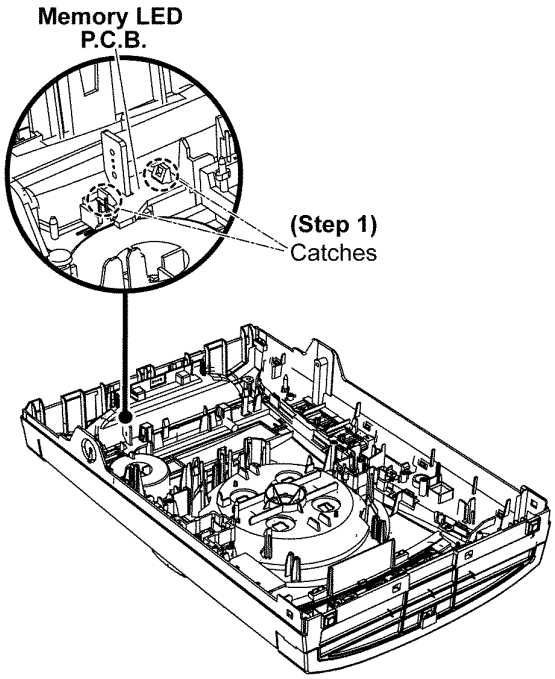


## 11.8. Disassembly of Remote Sensor P.C.B.

- **Refer to "Disassembly of Top Cabinet".**
- **Refer to "Disassembly of Front Panel Unit".**
- **Refer to "Disassembly of Panel P.C.B.".**

**Step 1** Remove the Remote Sensor P.C.B..

**Caution: During assembling, ensure that the Remote Sensor P.C.B. is properly inserted & fully connected to the Panel P.C.B..**

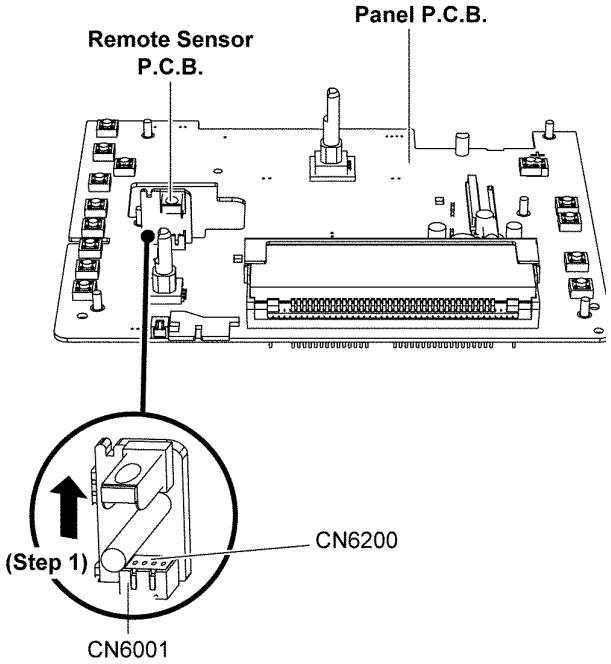

## 11.9. Disassembly of USB P.C.B.

- **Refer to “Disassembly of Top Cabinet”.**
- **Refer to “Disassembly of Front Panel Unit”.**
- **Refer to “Disassembly of Panel P.C.B.”.**

**Step 1** Remove 1 screw.
**Step 2** Remove the USB Unit.

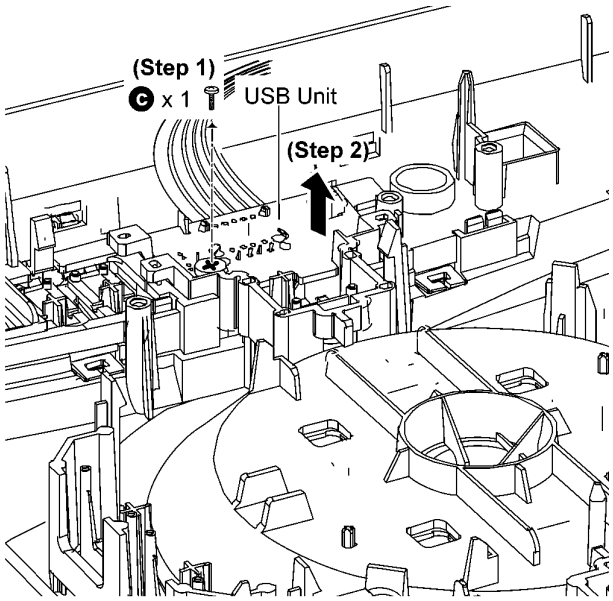


**Step 3** Release 1 catch.
**Step 4** Remove the USB P.C.B..

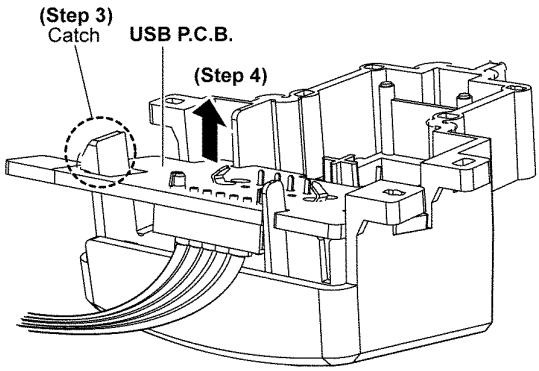


## 11.10. Disassembly of Music Port P.C.B.

- **Refer to “Disassembly of Top Cabinet”.**
- **Refer to “Disassembly of Front Panel Unit”.**

**Step 1** Remove 1 screw.
**Step 2** Release 1 catch.
**Step 3** Desolder 8P Cable Wire at ZJ6401 on the Panel P.C.B..
**Step 4** Remove the Music Port P.C.B..
**Caution: During assembling, ensure that the Music Port P.C.B. is properly located & fully catched onto the Front Panel Unit.**

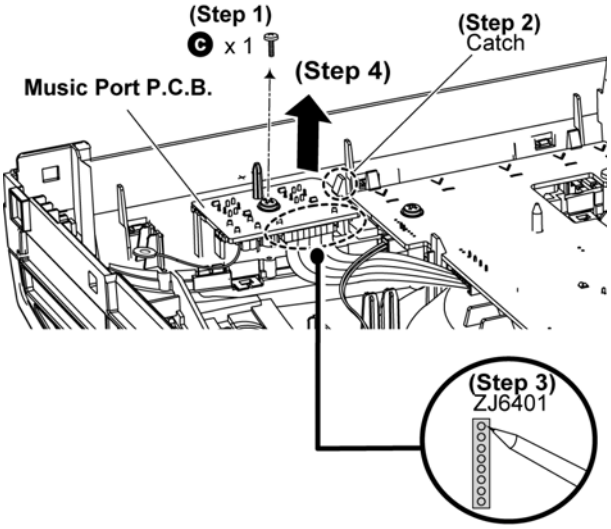

## 11.11. Disassembly of Top Bar LED P.C.B.

- **Refer to "Disassembly of Top Cabinet".**
- **Refer to "Disassembly of Front Panel Unit".**

**Step 1** Remove 2 screws.
**Step 2** Lift up the Lighting Cover.

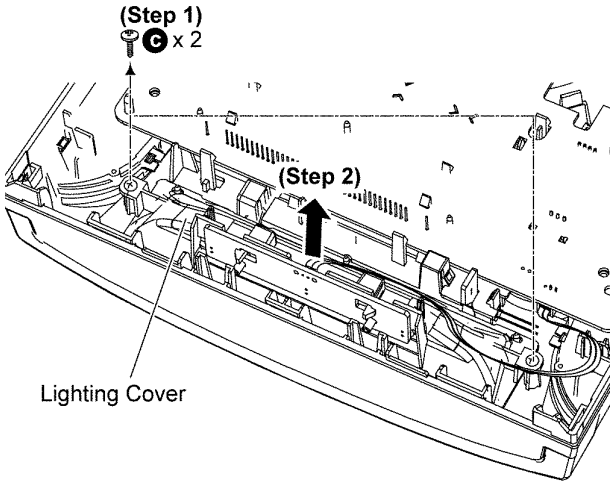


**Step 3** Release 2 catches.
**Step 4** Remove the Top Bar LED P.C.B..

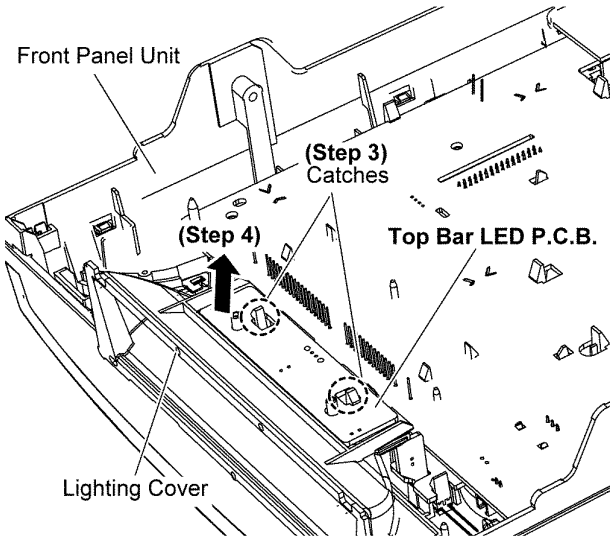


**Step 5** Place the Top Bar LED P.C.B. on the insulated material.
**Step 6** Desolder 2P Cable Wire at ZJ6600 on the Top bar LED P.C.B..

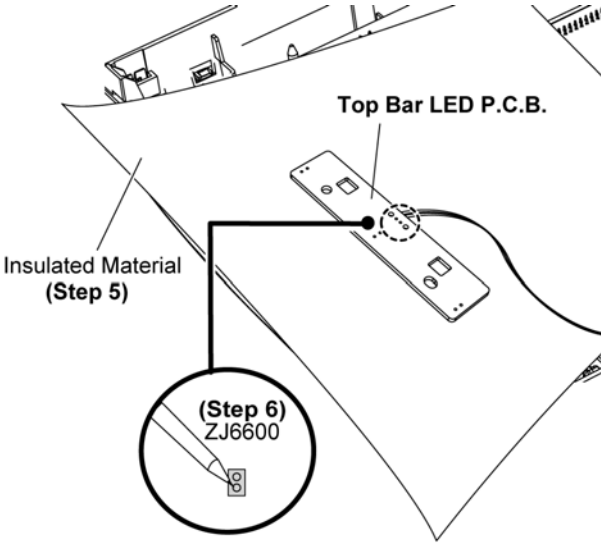

## 11.12. Disassembly of Bottom Bar LED P.C.B.

- **Refer to "Disassembly of Top Cabinet".**
- **Refer to "Disassembly of Front Panel Unit".**

**Step 1** Remove 2 screws.
**Step 2** Lift up the Lighting Cover.

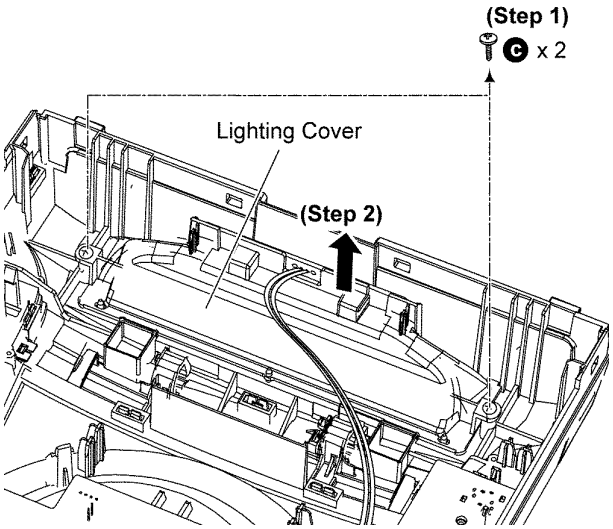


**Step 3** Release 2 catches.
**Step 4** Remove the Bottom Bar LED P.C.B..

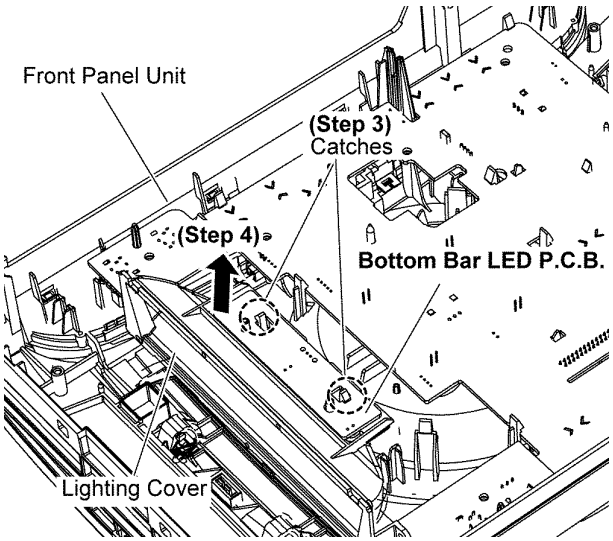


**Step 5** Place the Bottom Bar LED P.C.B. on the insulated material.
**Step 6** Desolder 2P Cable Wire at ZJ6700 on the Bottom Bar LED P.C.B..

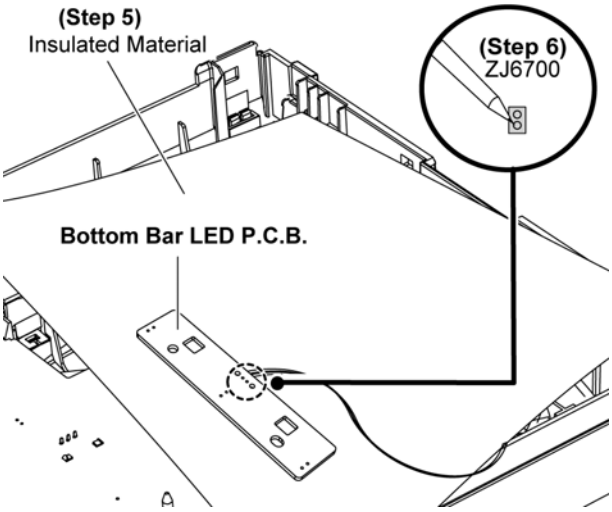


## 11.13. Disassembly of Main P.C.B.

- **Refer to "Disassembly of Top Cabinet".**
- **Refer to "Disassembly of Front Panel Unit".**

**Step 1** Detach 15P Cable Wire at the connector (CN5802) on the SMPS P.C.B..

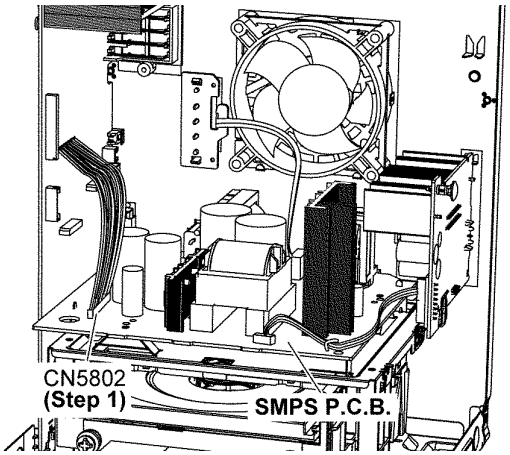

**Step 2** Remove 4 screws.

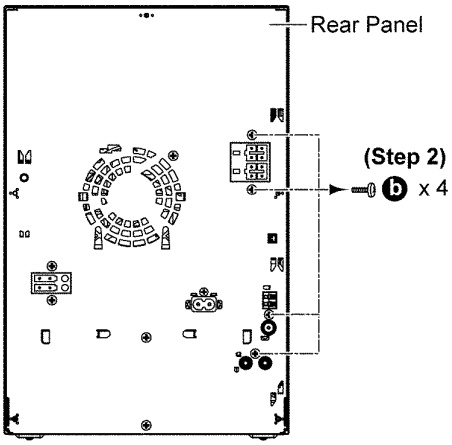


**Step 3** Remove 1 screw.
**Step 4** Slightly lift up the Main P.C.B. from the slots at the Bottom Chassis according to arrow shown.

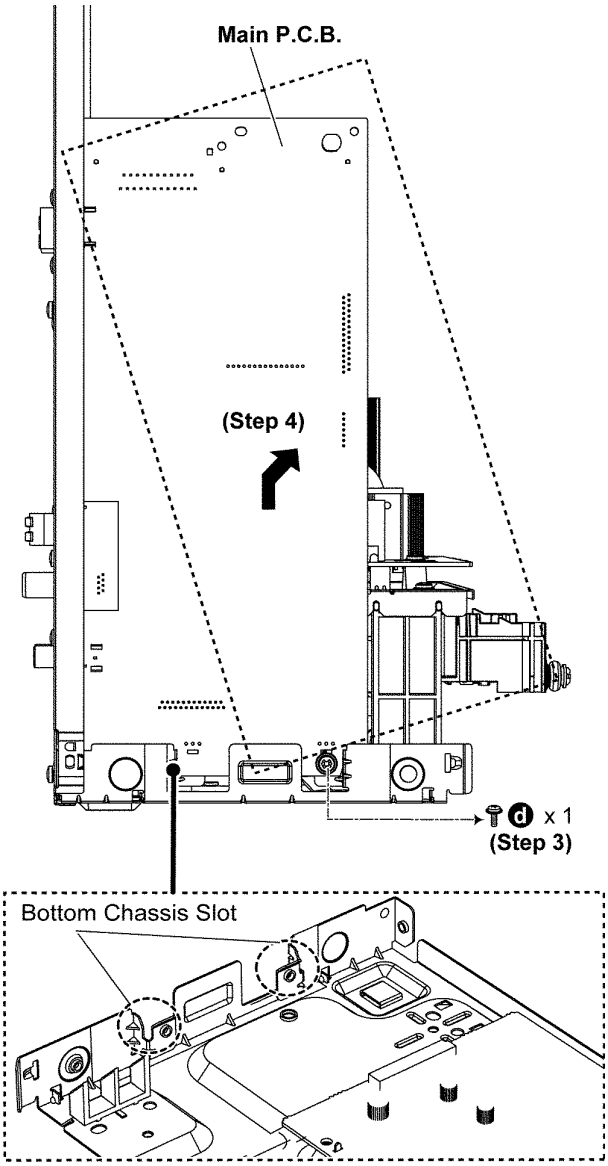


**Step 5** Detach 2P Wire at the connector (CN2005) on the Main P.C.B..

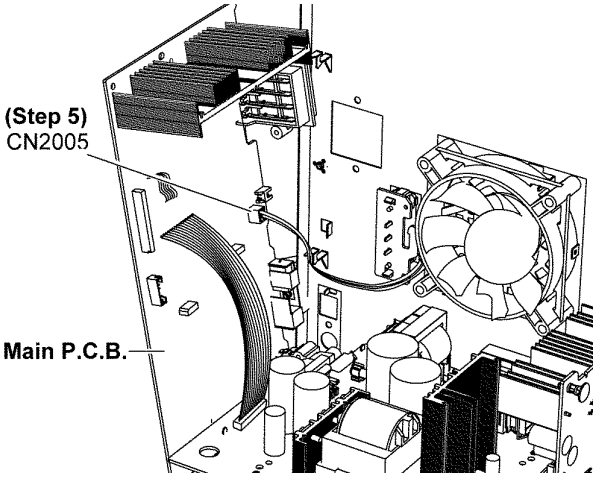


**Step 6** Detach 9P FFC at the connector (CN2011) on Main P.C.B..
**Step 7** Detach 30P FFC at the connector (CN2009) on Main P.C.B..
**Step 8** Remove the Main P.C.B..

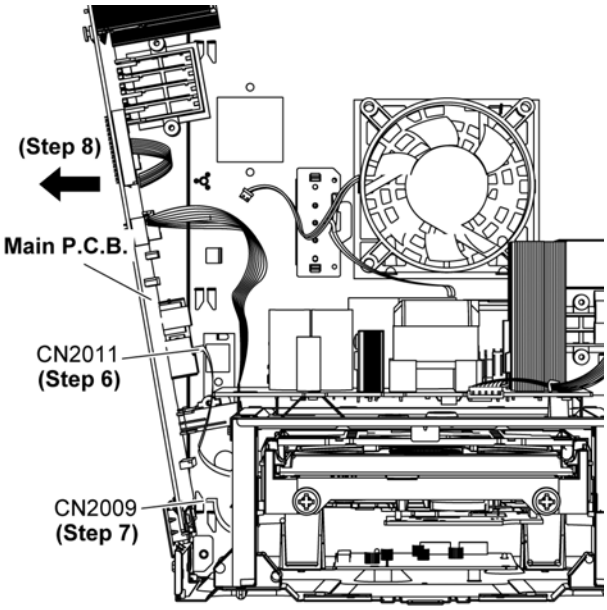

**Caution: During assembling, ensure that the earth plate is bended flat against the Main P.C.B. properly before inserting into the slots of the bottom chassis..**

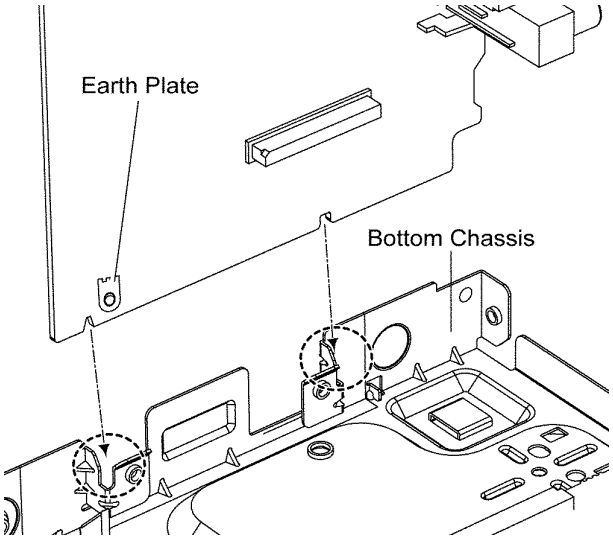


## 11.14. Replacement of Voltage Regulator IC (IC2010)

- **Refer to "Disassembly of Main P.C.B.".**

### 11.14.1. Disassembly of Voltage Regulator IC (IC2010)

**Step 1** Desolder pins of the Voltage Regulator IC (IC2010) on the solder side of the Main P.C.B..

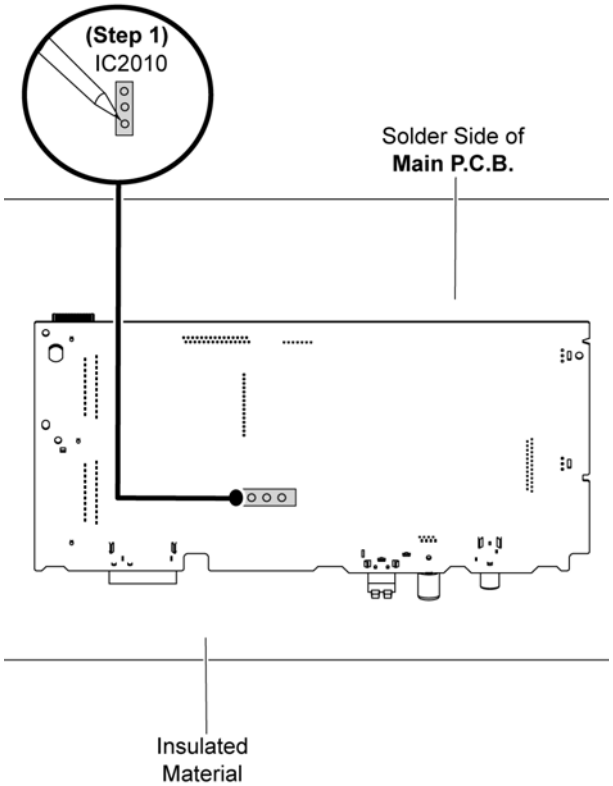


**Step 2** Remove the Voltage Regulator IC (IC2010) from the Main P.C.B..

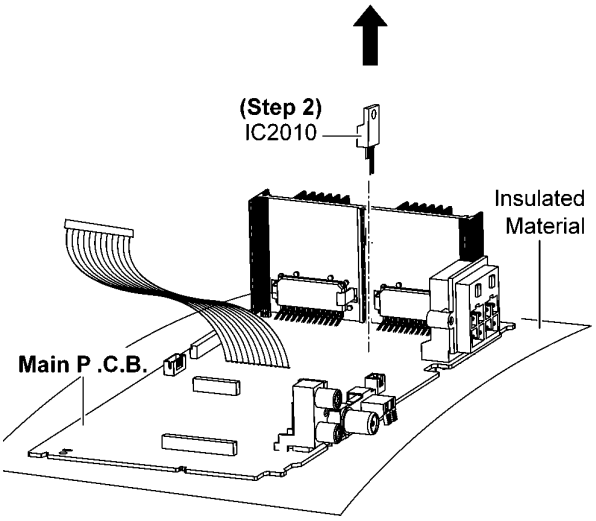


### 11.14.2. Assembly of Voltage Regulator IC (IC2010)

**Step 1** Fix the Voltage Regulator IC(IC2010) on the Main P.C.B..

**Caution: Ensure pins of the Voltage Regulator IC (IC2010) are properly inserted into the Main P.C.B..**

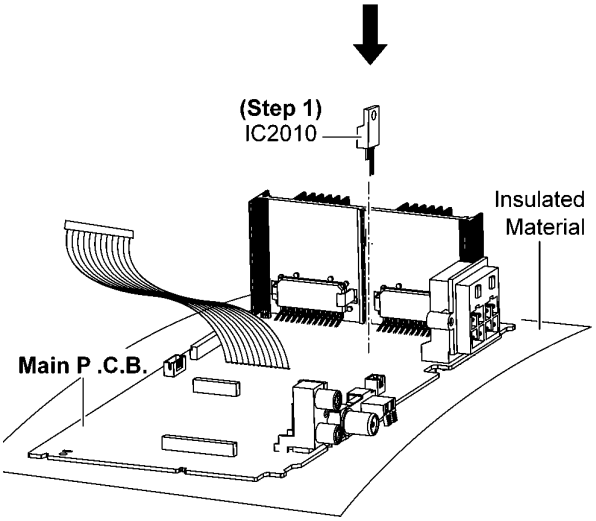

**Step 2** Solder pins of the Voltage Regulator IC (IC2010) on the solder side of the Main P.C.B..

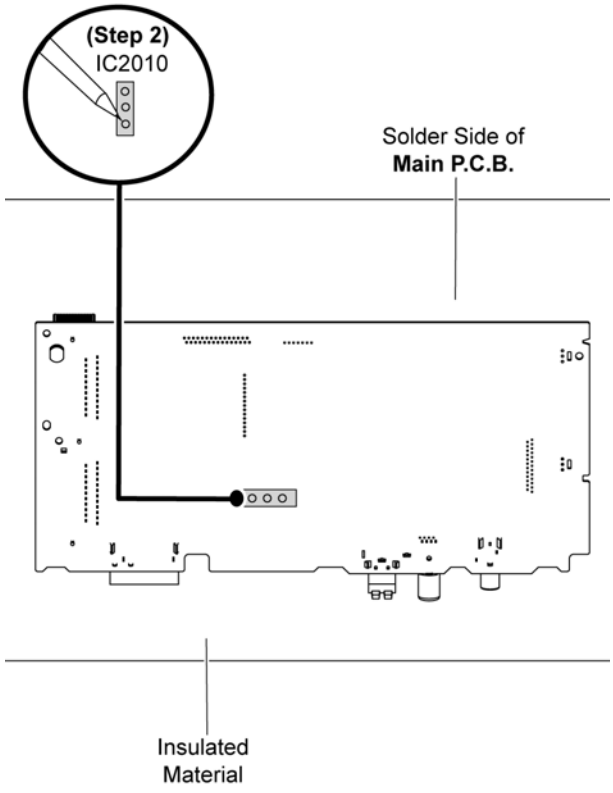


## 11.15. Replacement of Voltage Regulator IC (IC2011)

- **Refer to "Disassembly of Main P.C.B.".**

### 11.15.1. Disassembly of Voltage Regulator IC (IC2011)

**Step 1** Desolder pins of the Voltage Regulator IC (IC2011) on the solder side of the Main P.C.B..

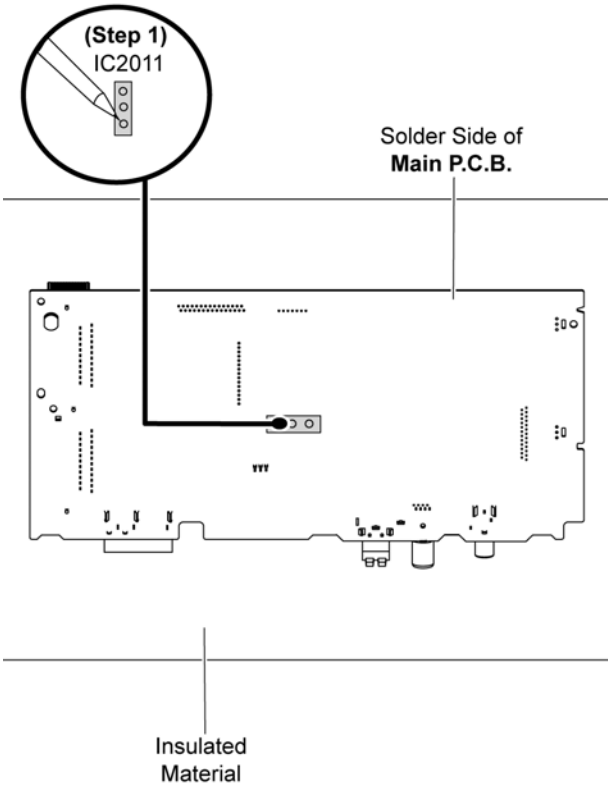


**Step 2** Remove the Voltage Regulator IC (IC2011) from the Main P.C.B..

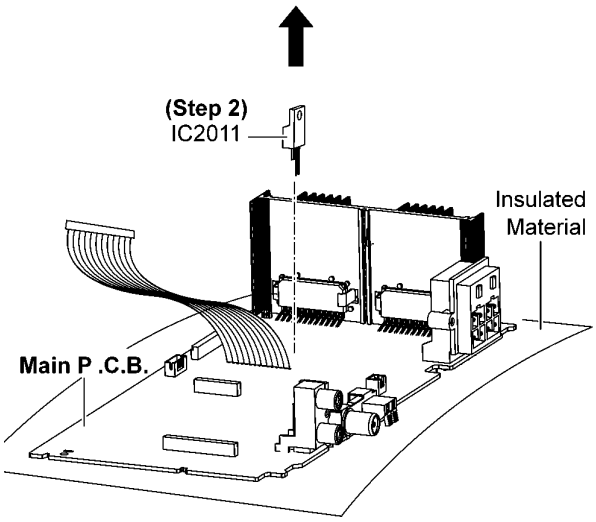

### 11.15.2. Assembly of Voltage Regulator IC (IC2011)

**Step 1** Fix the Voltage Regulator IC(IC2011) on Main P.C.B..

**Caution: Ensure pins of the Voltage Regulator IC (IC2011) are properly inserted into the Main P.C.B..**

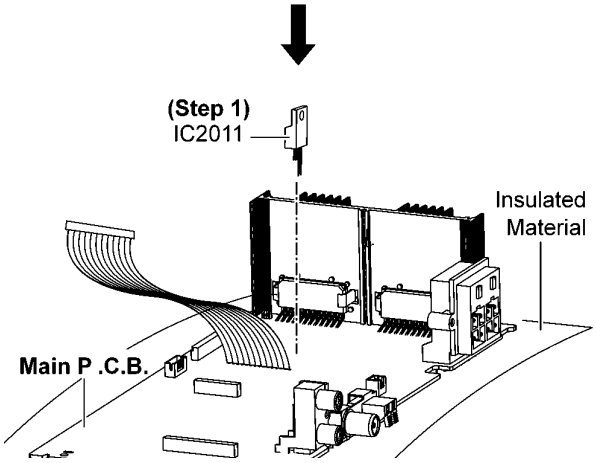


**Step 2** Solder pins of the Voltage Regulator IC (IC2011) on the solder side of the Main P.C.B..

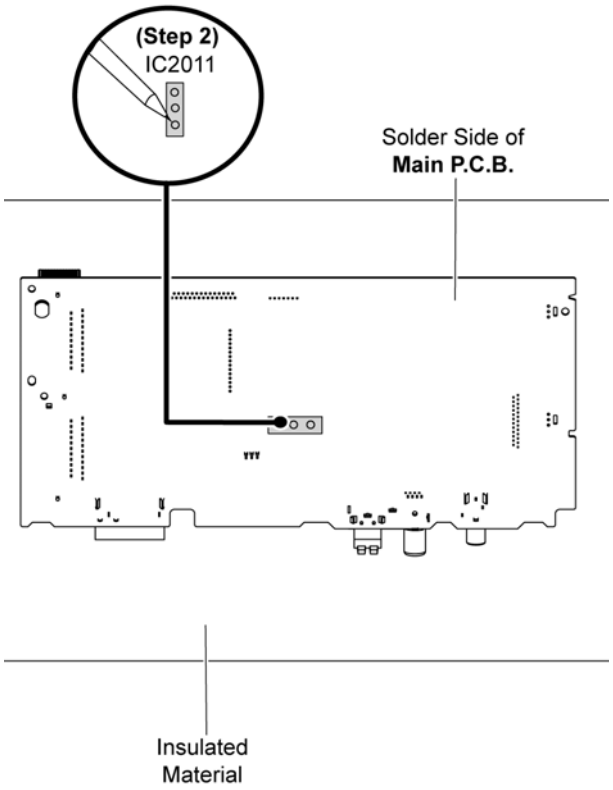


## 11.16. Replacement of Audio Digital Amp IC (IC5800)

- **Refer to "Disassembly of Main P.C.B.".**

### 11.16.1. Disassembly of Audio Digital Amp IC (IC5800)

**Step 1** Desolder pins of the Audio Digital Amp IC (IC5800) on the solder side of the Main P.C.B..

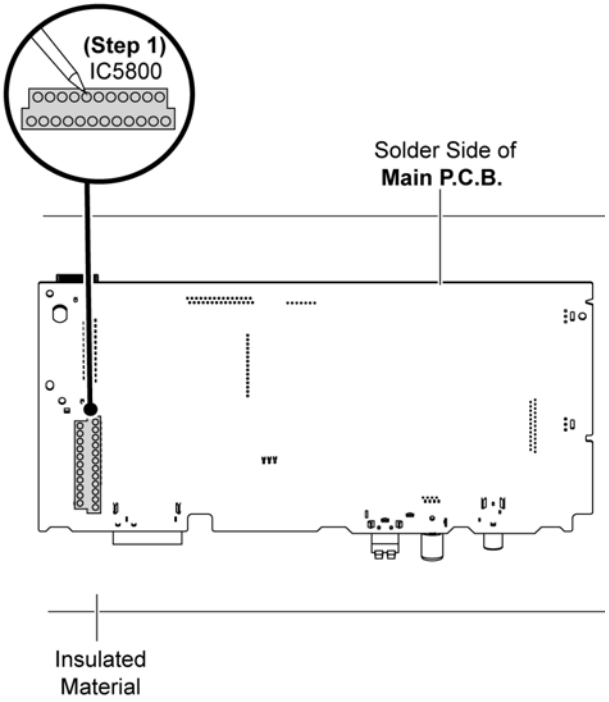


**Step 2** Release 2 catches of the Heatsink Clip.

**Caution: During releasing of the 2 catches, avoid touching the Heatsink due to it's high temperature after prolonged use. Touching it may lead to injuries.**

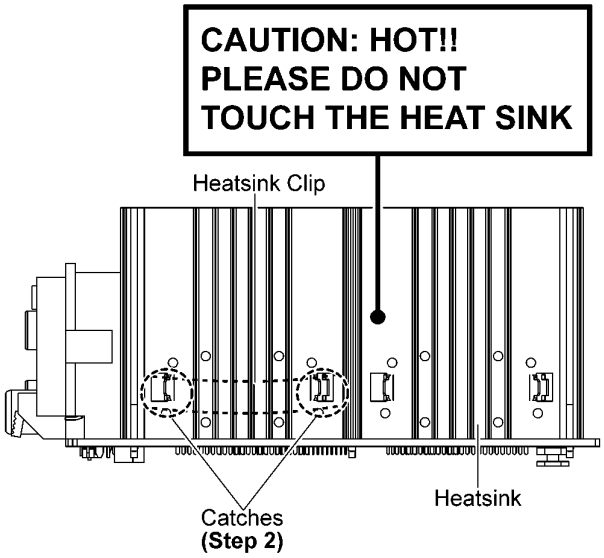

**Step 3** Remove the Heatsink Clip.
**Step 4** Remove the Audio Digital Amp IC (IC5800).

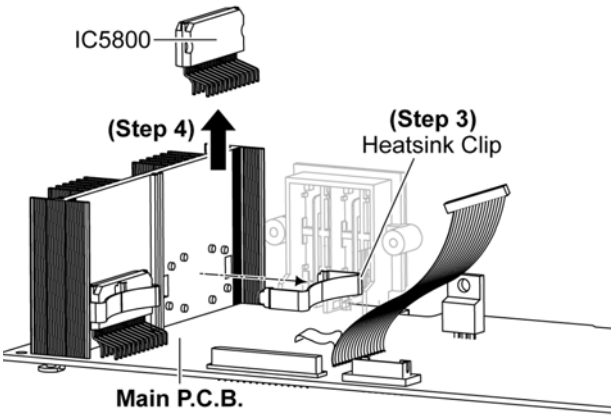


## 11.16.2. Assembly of Audio Digital Amp IC (IC5800)

**Step 1** Apply grease to the Heatsink.
**Step 2** Fix the Audio Digital Amp IC (IC5800) on the Main P.C.B..
**Caution: Ensure pins of the Audio Digital Amp IC (IC5800) are properly inserted into the Main P.C.B..**
**Step 3** Fix the Heatsink Clip to the Heatsink.
**Caution: During assembling, ensure that the Heatsink Clip is catched onto the Heatsink properly.**

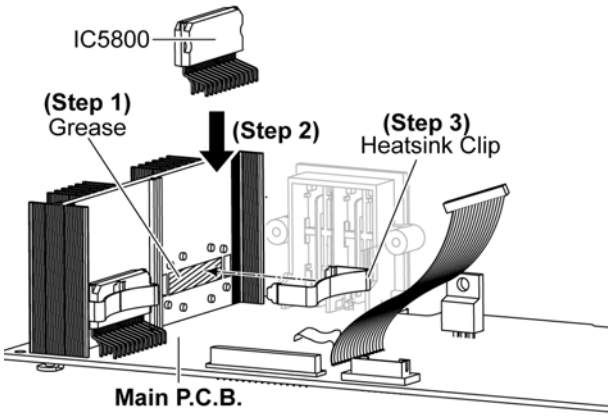


**Step 4** Solder pins of the Audio Digital Amp IC (IC5800) on the solder side of the Main P.C.B..

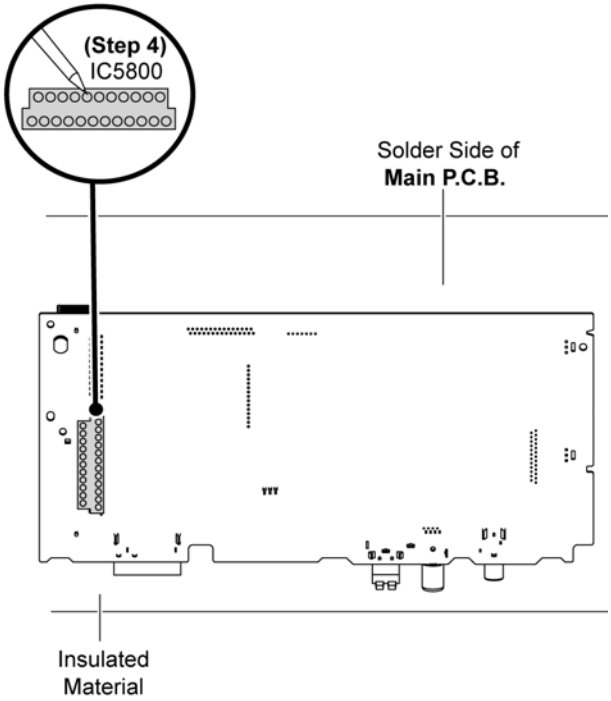

## 11.17. Replacement of Audio Digital Amp IC (IC5700)

- **Refer to "Disassembly of Main P.C.B.".**

### 11.17.1. Disassembly of Audio Digital Amp IC (IC5700)

**Step 1** Desolder pins of the Audio Digital Amp IC (IC5700) on the solder side of the Main P.C.B..

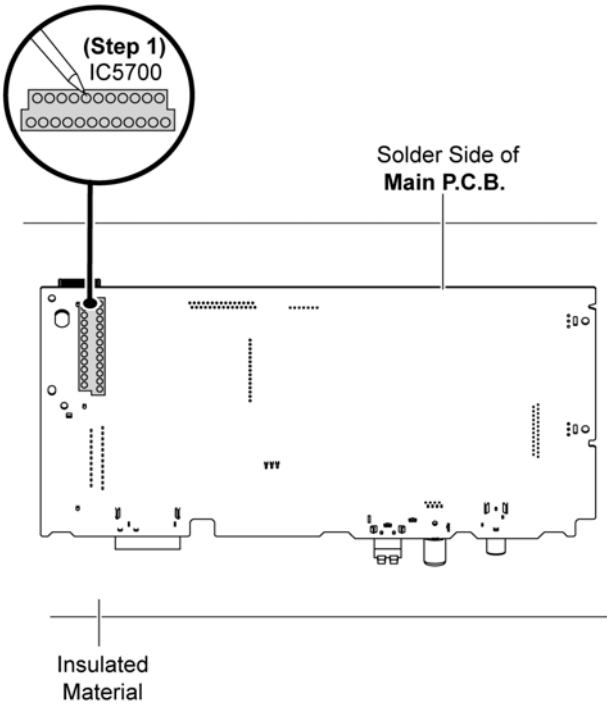


**Step 2** Release 2 catches of the Heatsink Clip.

**Caution: During releasing of the 2 catches, avoid touching the Heatsink due to it's high temperature after prolonged use. Touching it may lead to injuries.**

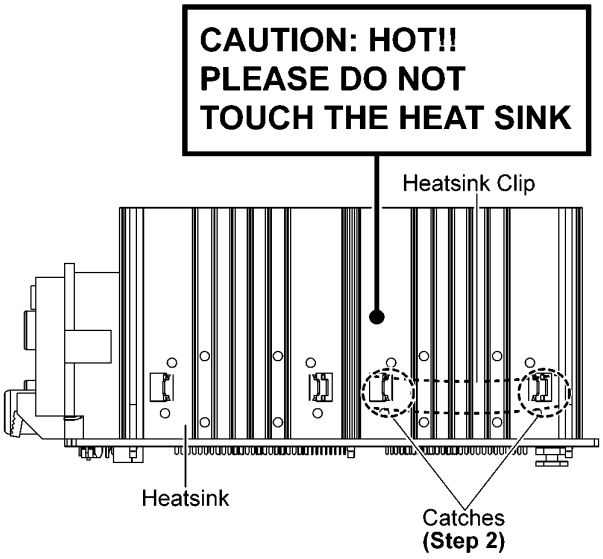


**Step 3** Remove the Heatsink Clip.

**Step 4** Remove the Audio Digital Amp IC (IC5700).

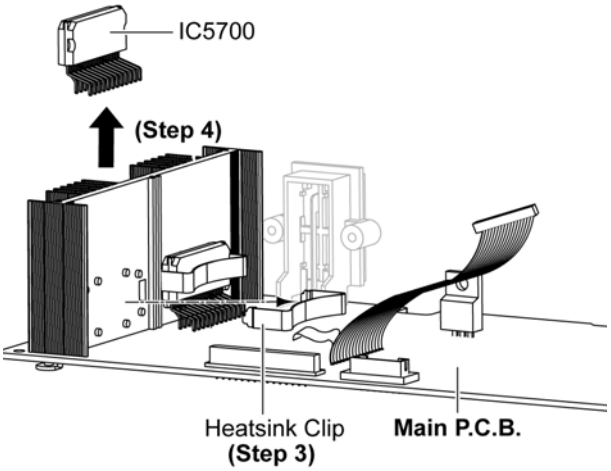

### 11.17.2. Assembly of Audio Digital Amp IC (IC5700)

**Step 1** Apply grease to the Heatsink.

**Step 2** Fix the Audio Digital Amp IC (IC5700) on the Main P.C.B.

**Caution: Ensure pins of the Audio Digital Amp IC (IC5700) are properly inserted into the Main P.C.B..**

**Step 3** Fix the Heatsink Clip to the Heatsink.

**Caution: During assembling, ensure that the Heatsink Clip is catched onto the Heatsink properly.**

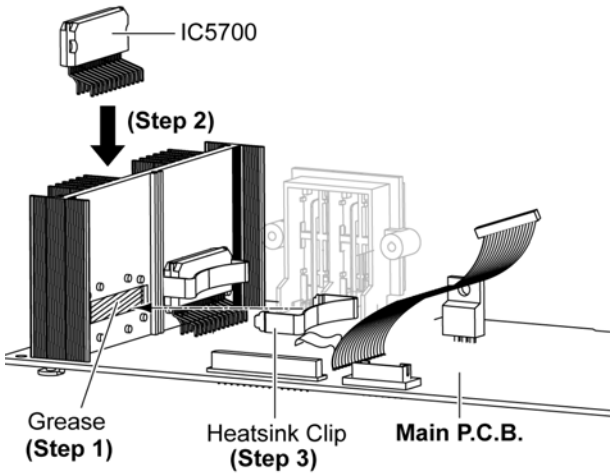


**Step 4** Solder pins of the Audio Digital Amp IC (IC5700) on the solder side of the Main P.C.B..

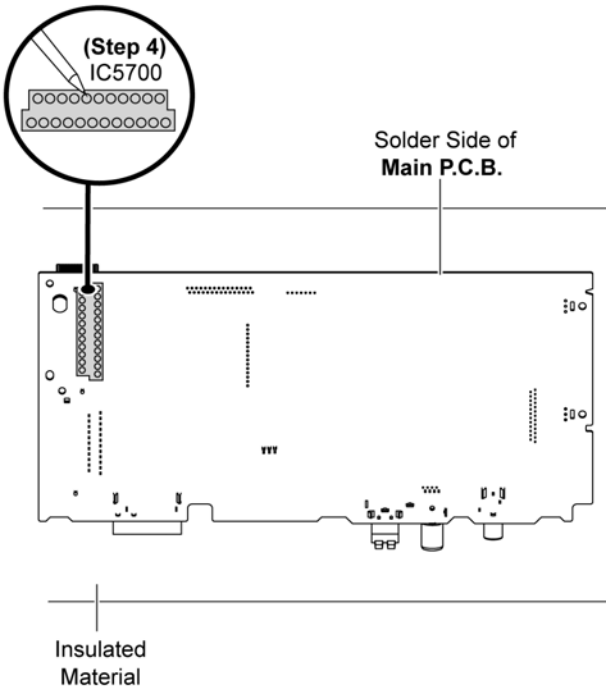


## 11.18. Disassembly of D-Amp P.C.B.

- **Refer to "Disassembly of Top Cabinet".**
- **Refer to "Disassembly of Front Panel Unit".**

**Step 1** Remove 2 screws.

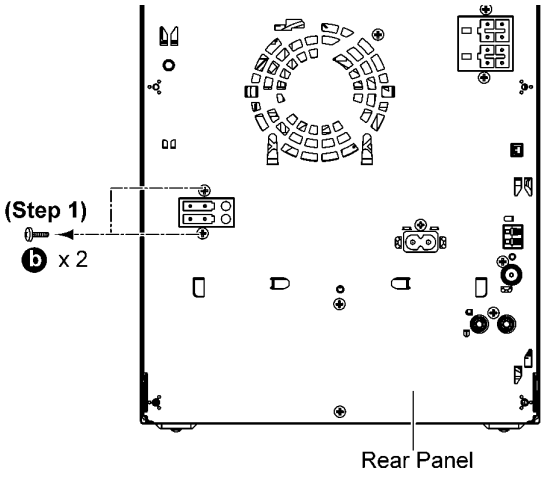


**Step 2** Lift up the Wire Clamper.

**Step 3** Detach 6P Cable Wire at the connector (CN5801) on the SMPS P.C.B..

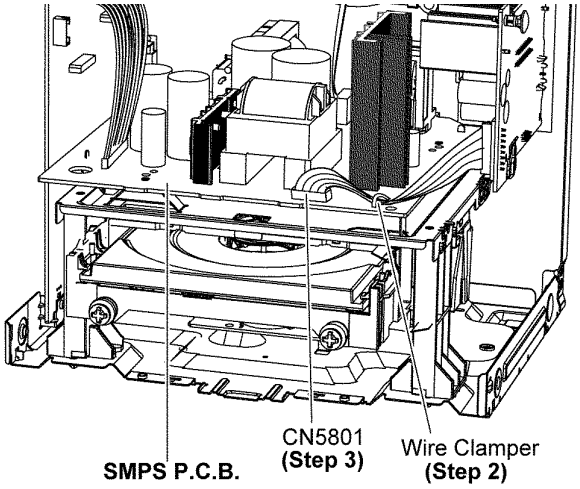

**Step 4** Remove 1 screw.

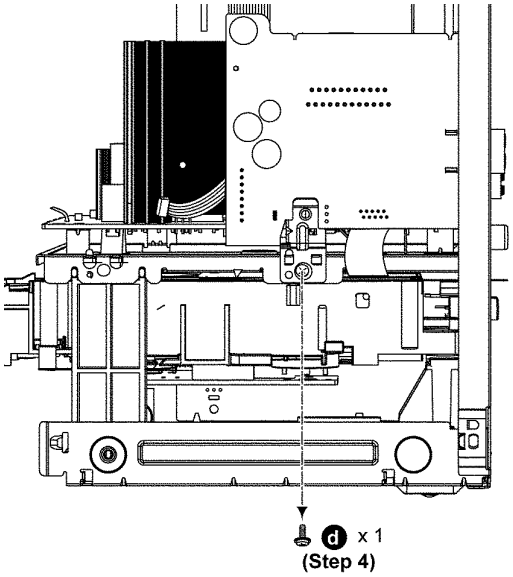


**Step 5** Slightly lift up & remove the D-Amp Unit as arrow shown.

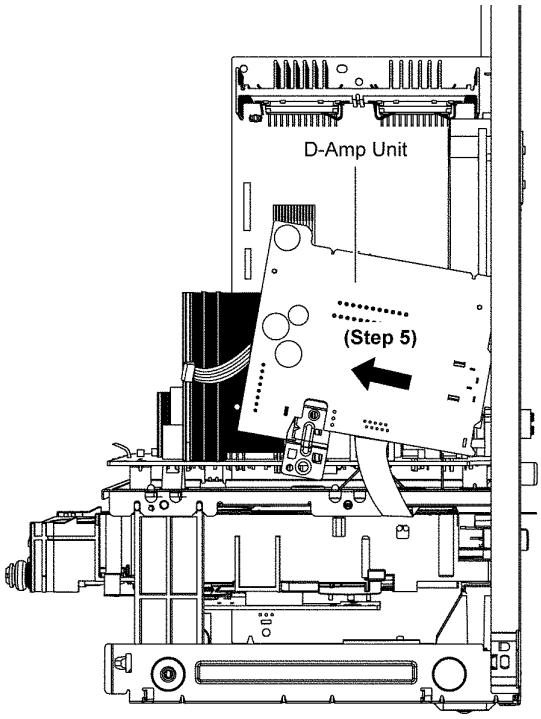


**Caution: During assembling, ensure that the D-Amp Bracket is seated properly on the locator of Inner Chassis.**

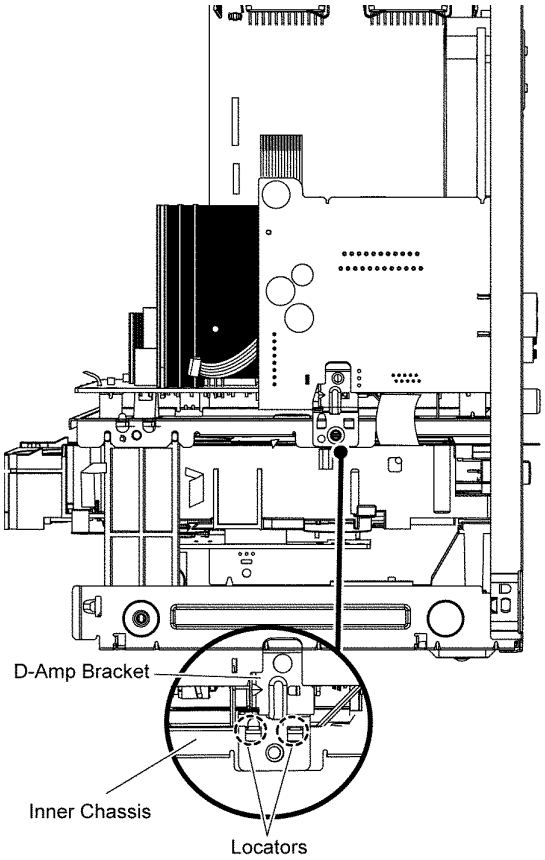


**Step 6** Detach 9P FFC at the connector (CN5902) on the D-Amp P.C.B..

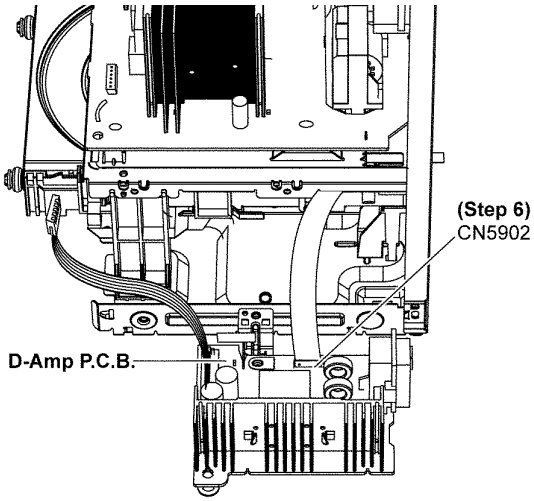

**Step 7** Remove 1 screw.

**Step 8** Remove the D-Amp P.C.B..

**Caution: Keep the D-Amp Brackets in safe place, place it back during assembling.**

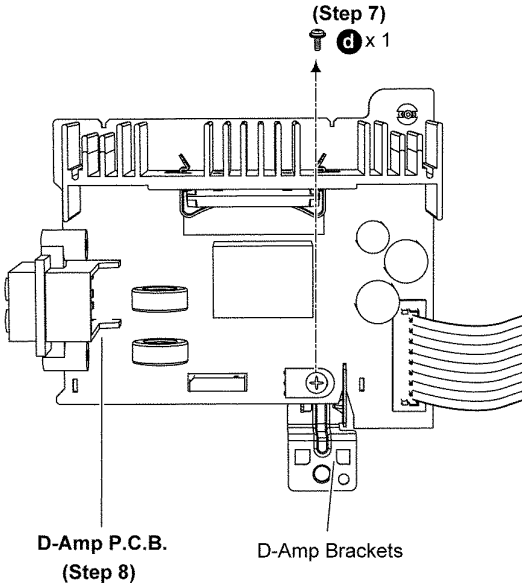


## 11.19. Replacement of Audio Digital Amp IC (IC5900)

- **Refer to "Disassembly of D-Amp P.C.B.".**

### 11.19.1. Disassembly of Audio Digital Amp IC (IC5900)

**Step 1** Desolder pins of the Audio Digital Amp IC (IC5900) on the solder side of the D-Amp P.C.B..

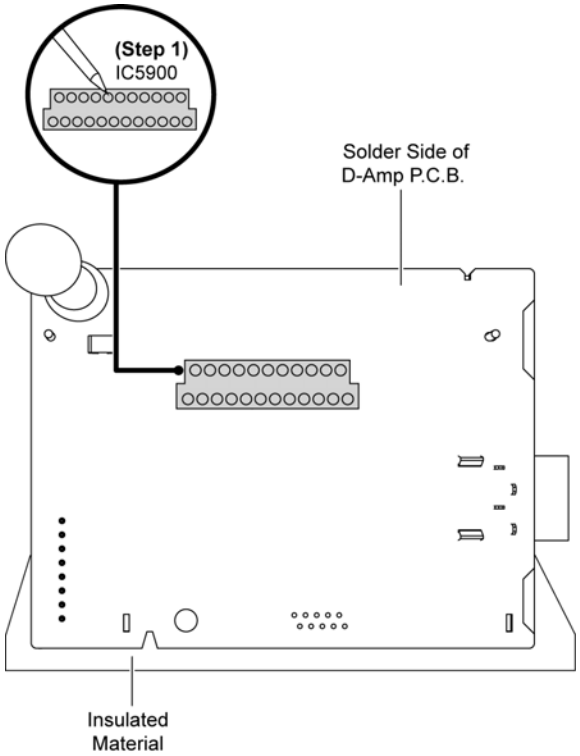


**Step 2** Release 2 catches of the Heatsink Clip.

**Caution: During releasing of the 2 catches, avoid touching the Heatsink due to it's high temperature after prolonged use. Touching it may lead to injuries..**

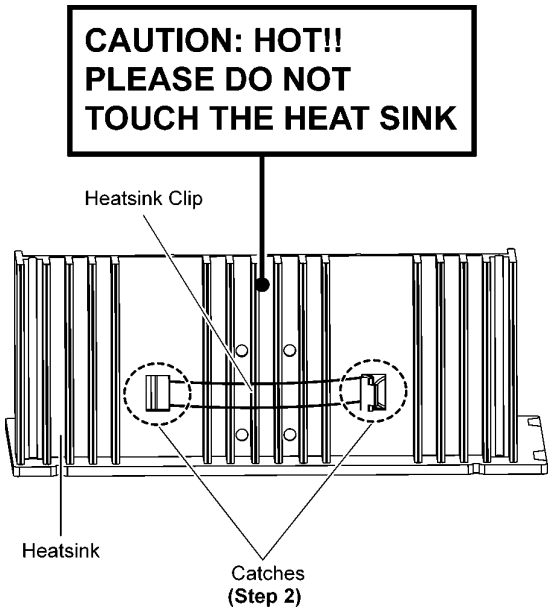


**Step 3** Remove the Heatsink Clip.

**Step 4** Remove the Audio Digital Amp IC (IC5900).

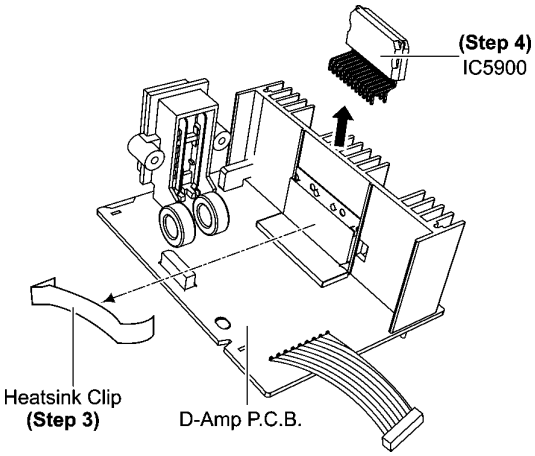

### 11.19.2. Assembly of Audio Digital Amp IC (IC5900)

**Step 1** Apply grease to the Heatsink.

**Step 2** Fix the Audio Digital Amp IC (IC5900) on D-Amp P.C.B.

**Caution: Ensure pins of the Audio Digital Amp IC (IC5900) are properly inserted into the D-Amp P.C.B..**

**Step 3** Fix Heatsink Clip to the Heatsink.

**Caution: During assembling, ensure that the Heatsink Clip is catched onto the Heatsink properly.**

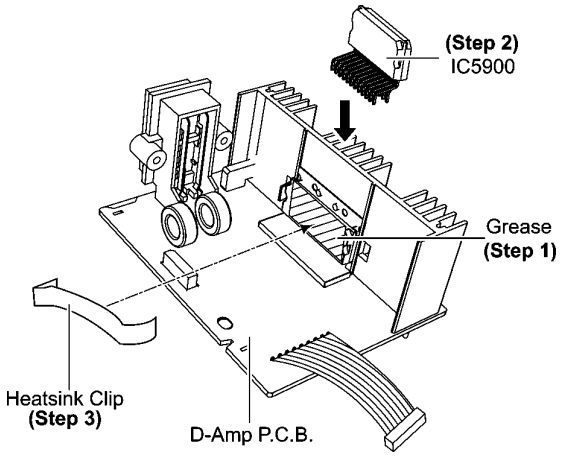


**Step 4** Solder pins of the Audio Digital Amp IC (IC5900) on the solder side of D-Amp P.C.B..

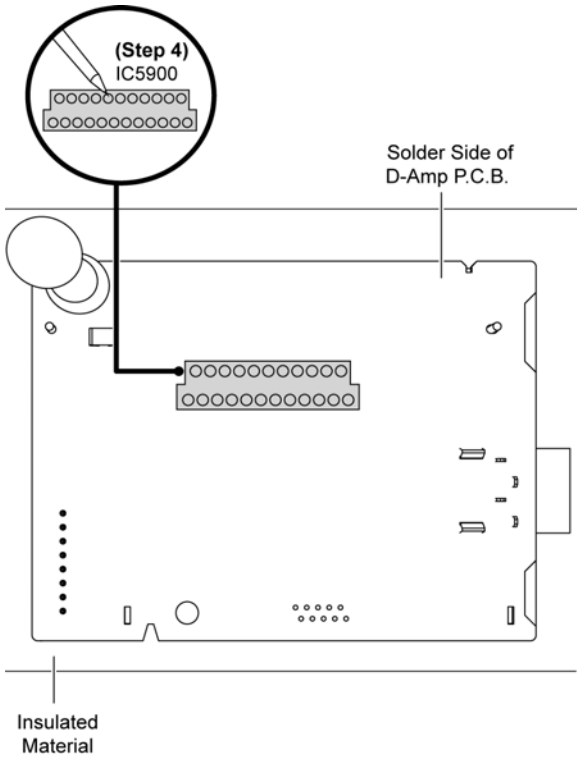


## 11.20. Disassembly of SMPS P.C.B.

- **Refer to "Disassembly of Top Cabinet".**
- **Refer to "Disassembly of Front Panel Unit".**
- **Refer to "Disassembly of D-Amp P.C.B.".**

**Step 1** Remove 1 screw.

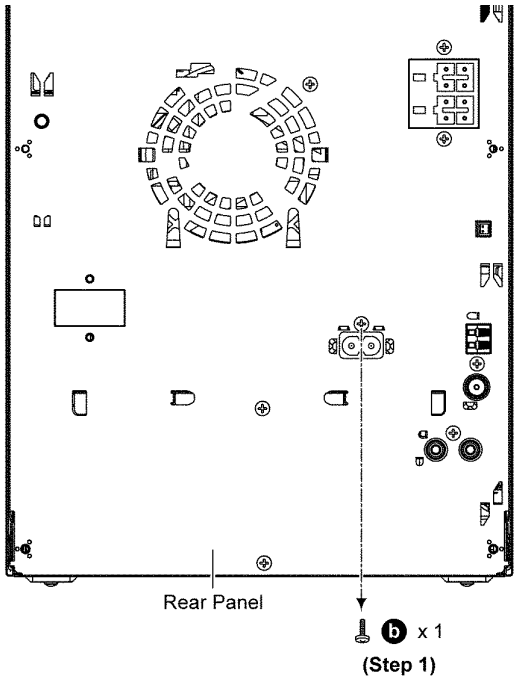


**Step 2** Remove 3 screws.

**Step 3** Detach 15P Cable Wire at the connector (CN5802) on SMPS P.C.B..

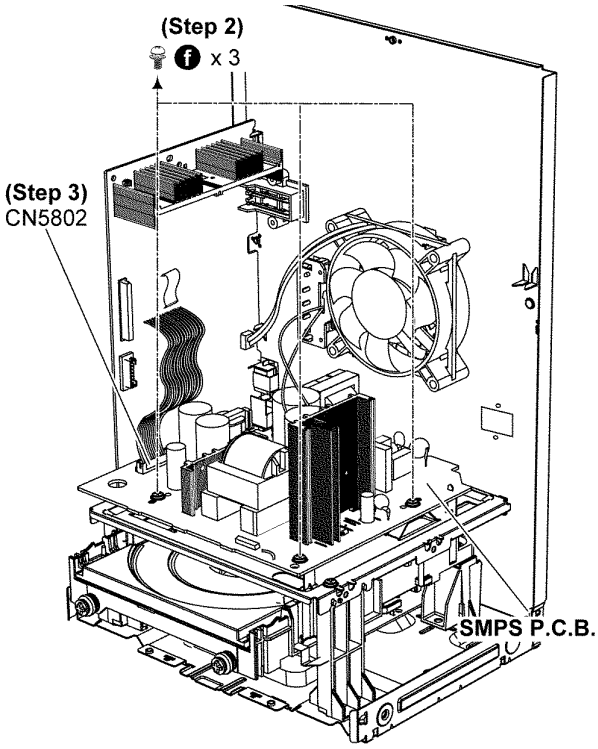

**Step 4** Upset the SMPS P.C.B. and place it according to diagram shown.
**Step 5** Place the SMPS P.C.B. on an insulated material.
**Step 6** Desolder Black Wire (TL7) and Red Wire TL8 (Red).
**Step 7** Remove the SMPS P.C.B..

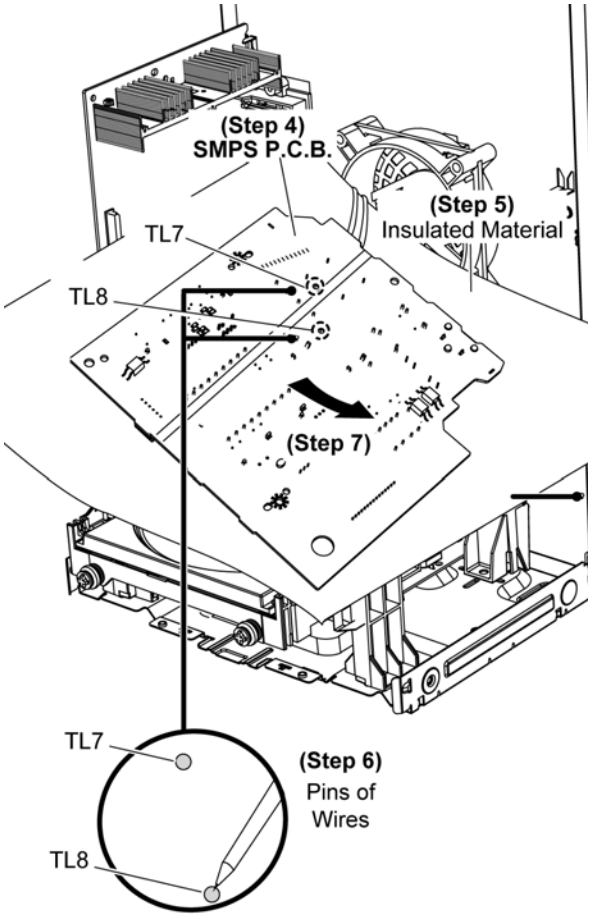


# 11.21. Replacement of Switching Regulator IC (IC5701)

- **Refer to "Disassembly of SMPS P.C.B.".**

## 11.21.1. Disassembly of Switching Regulator IC (IC5701)

**Step 1** Desolder pins of the Switching Regulator IC (IC5701) on the solder side of the SMPS P.C.B..

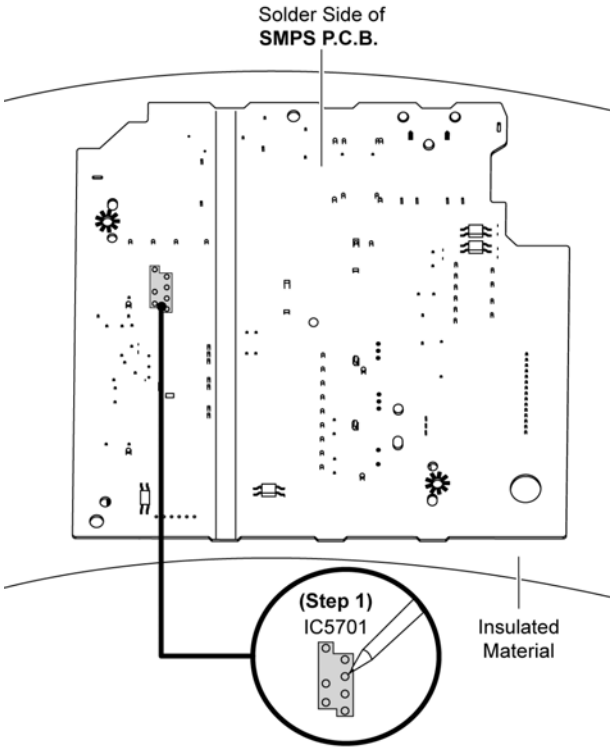


**Step 2** Remove 1 screw.
**Step 3** Remove the Switching Regulator IC (IC5701).
**Caution: Avoid touching the Heatsink A due to its high temperature after prolonged use. Touching it may lead to injuries.**

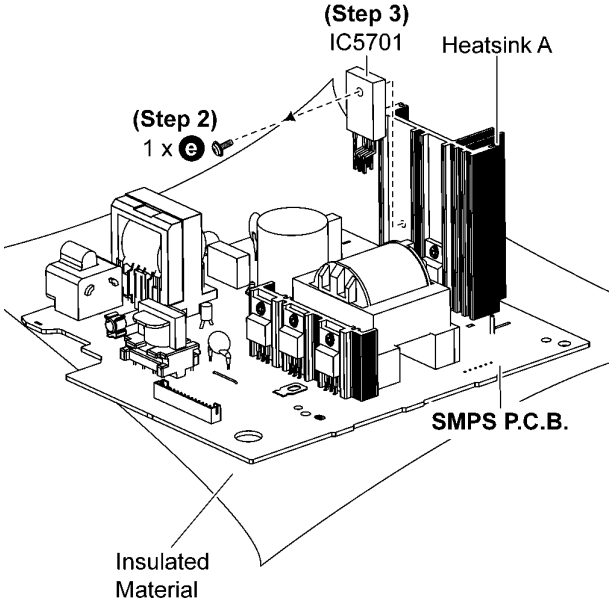

### 11.21.2. Assembly of Switching Regulator IC (IC5701)

**Step 1** Apply grease to the Heatsink A.

**Step 2** Fix the Switching Regulator IC (IC5701) to the SMPS P.C.B..

**Caution: Ensure pins of the Switching Regulator IC (IC5701) are properly inserted into the SMPS P.C.B..**

**Step 3** Screw the Switching Regulator IC (IC5701) to the Heatsink A.

**Caution: Ensure the Switching Regulator IC (IC5701) is tightly screwed to the Heatsink A.**

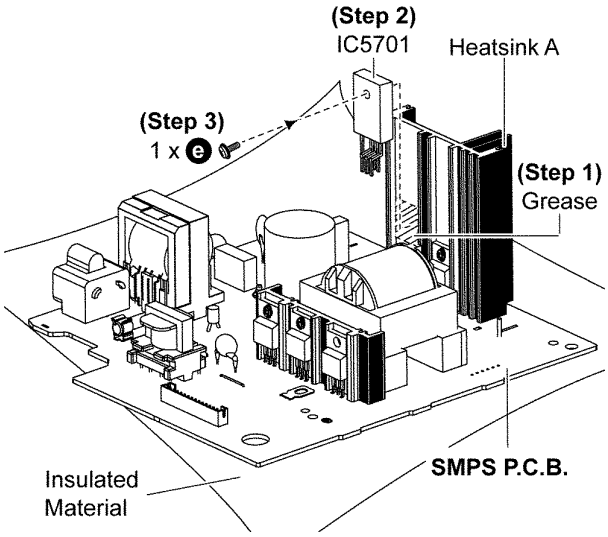


**Step 4** Solder pins of the Switching Regulator IC (IC5701) on the solder side of the SMPS P.C.B..

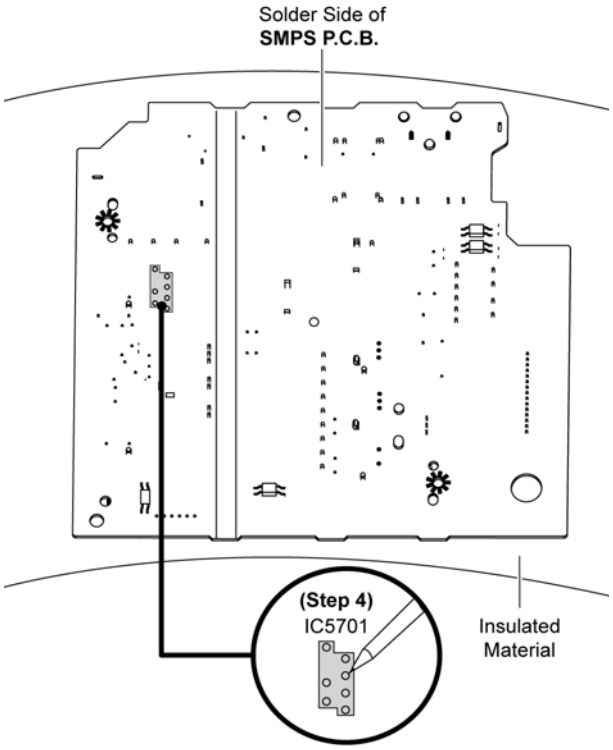


## 11.22. Replacement of Rectifier Diode (D5702)

- **Refer to "Disassembly of SMPS P.C.B.".**

### 11.22.1. Disassembly of Rectifier Diode (D5702)

**Step 1** Desolder pins of the Rectifier Diode (D5702) on the solder side of the SMPS P.C.B.

**Step 2** Desolder pins of the Heatsink A.

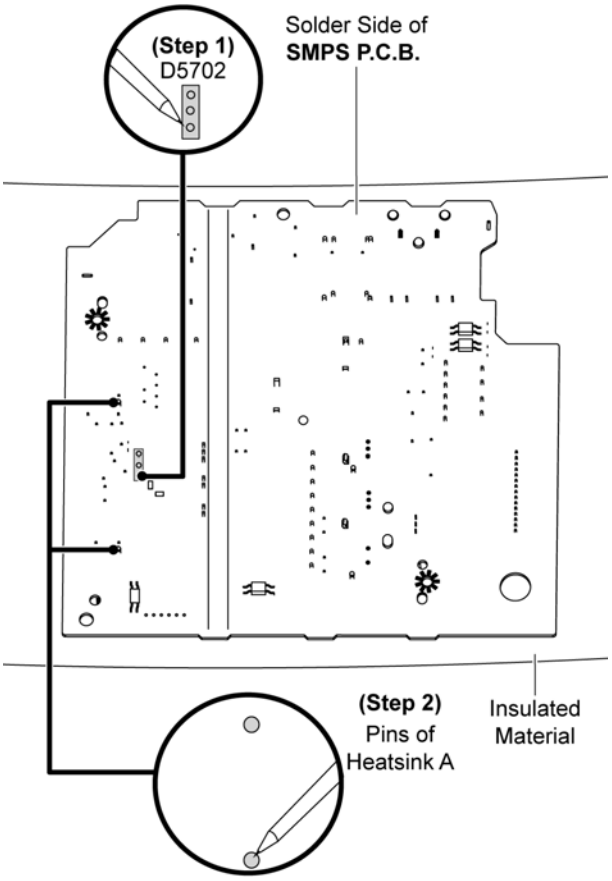

**Step 3** Remove 1 screw at Switching Regulator IC (IC5701).
**Step 4** Remove the Heatsink A with Rectifier Diode (D5702).
**Step 5** Remove 1 screw.
**Step 6** Remove the Rectifier Diode (D5702) from the Heatsink A.
**Caution: Avoid touching the Heatsink A due to its high temperature after prolong use. Touching it may lead to injuries.**

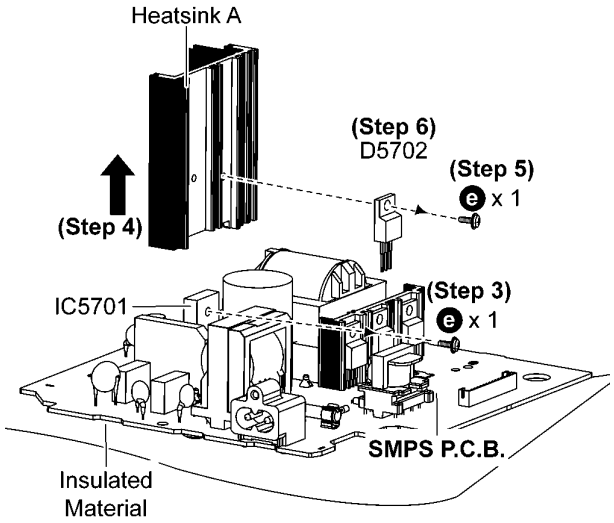


## 11.22.2. Assembly of Rectifier Diode (D5702)

**Step 1** Apply grease to the Heatsink A.
**Step 2** Screw the Rectifier Diode (D5702) to the Heatsink A.
**Caution: Ensure the Rectifier Diode (D5702) is tightly screwed to the Heatsink A.**
**Step 3** Fix the Heatsink A with Rectifier Diode (D5702) on the SMPS P.C.B. as shown.
**Caution: Ensure the Heatsink A with Rectifier Diode (D5702) are properly inserted into the SMPS P.C.B.**
**Step 4** Screw the Switching Regulator IC (IC5701) to the Heatsink A.
**Caution: Ensure that Switching Regulator IC (IC5701) is tightly screwed to the Heatsink A.**

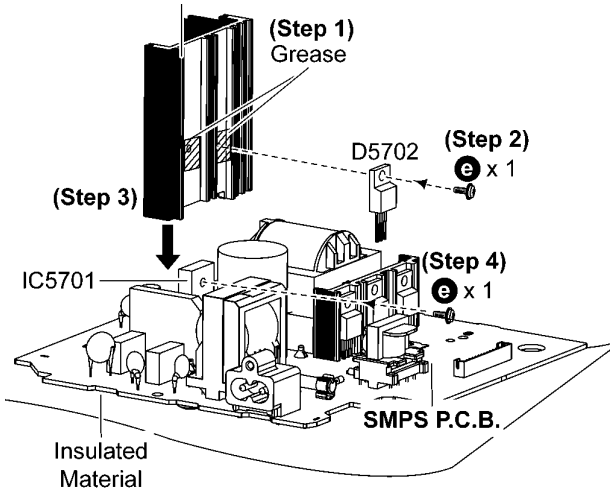


**Step 5** Solder pins of the Rectifier Diode (D5702) on the solder side of the SMPS P.C.B..
**Step 6** Solder pins of the Heatsink A on the solder side of SMPS P.C.B..

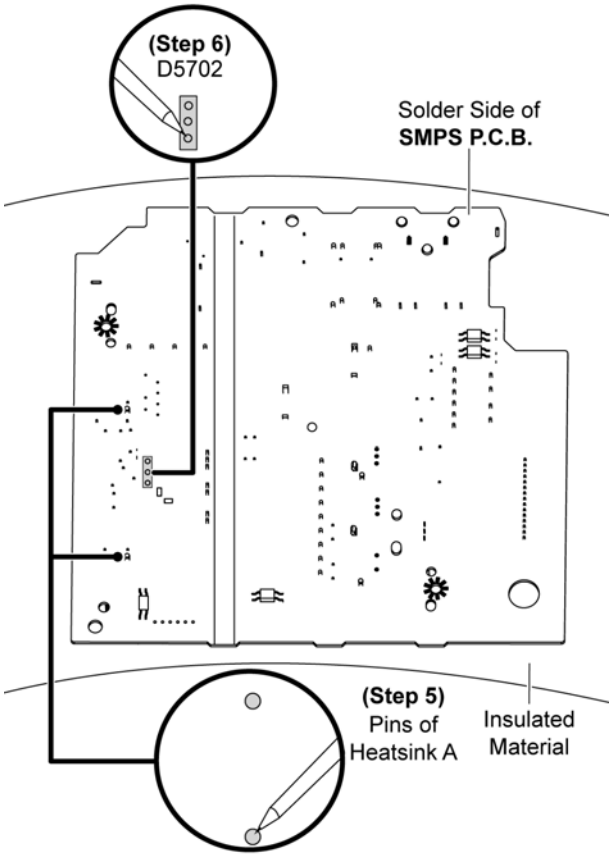

## 11.23. Replacement of Rectifier Diode (D5801)

- **Refer to "Disassembly of SMPS P.C.B.".**

### 11.23.1. Disassembly of Rectifier Diode (D5801)

**Step 1** Desolder pins of the Rectifier Diode (D5801) on the solder side of the SMPS P.C.B..
**Step 2** Desolder pins of the Heatsink B.

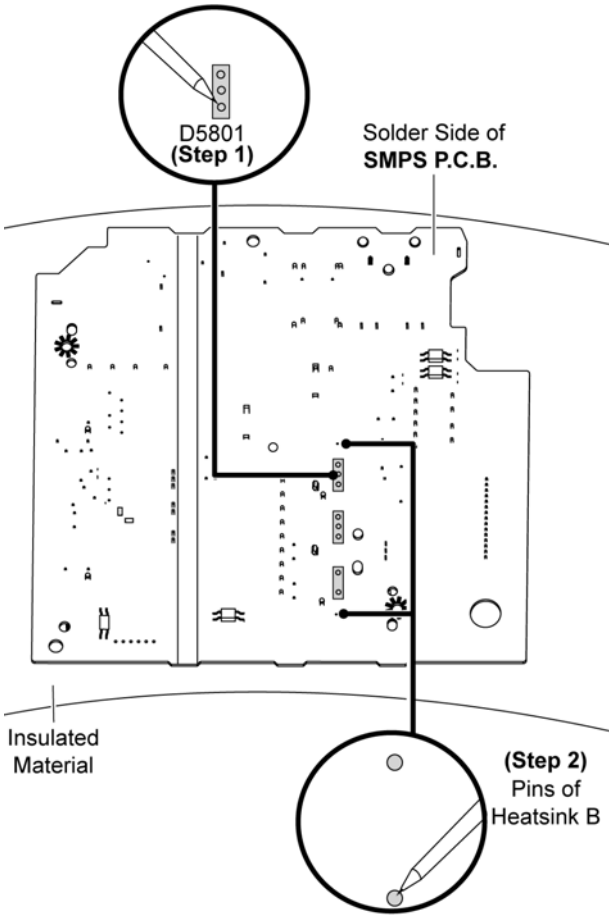


**Step 3** Remove 1 screw at Rectifier Diode (D5801).
**Step 4** Remove the Rectifier Diode (D5801) from SMPS P.C.B..
**Caution: Avoid touching the Heatsink B due to its high temperature after prolonged use. Touching it may lead to injuries.**

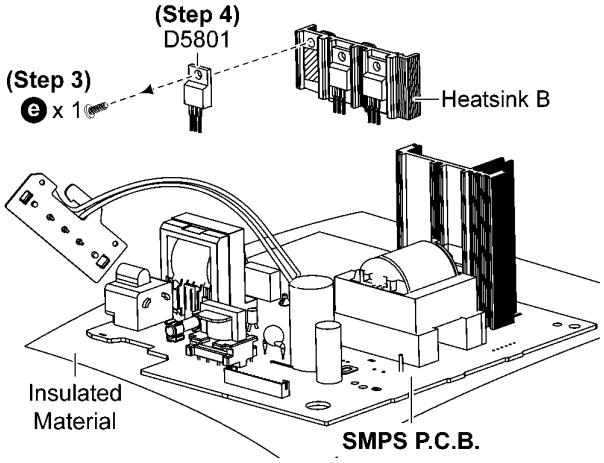


### 11.23.2. Assembly of Rectifier Diode (D5801)

**Step 1** Apply grease to the Heatsink B.
**Step 2** Screw the Rectifier Diode (D5801) to the Heatsink B.
**Caution: Ensure the Rectifier Diode (D5801) is tightly screwed to the Heatsink B.**
**Step 3** Fix the Heatsink B with Rectifier Diode (D5801) on the SMPS P.C.B..
**Caution: Ensure pins of the Rectifier Diode (D5801) is properly inserted into the SMPS P.C.B..**

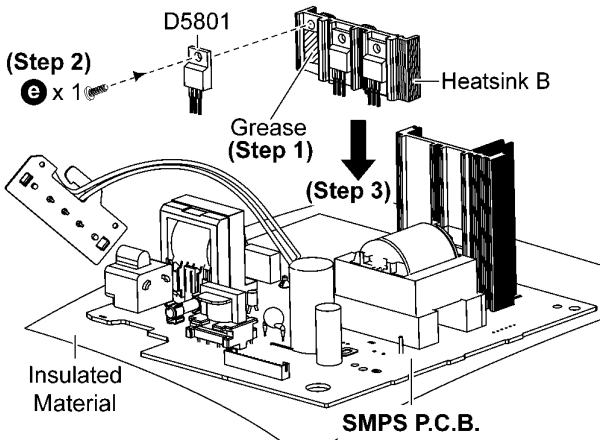

**Step 4** Solder pins of the Rectifier Diode (D5801) on the solder side of the SMPS P.C.B..
**Step 5** Solder pins of the Heatsink B.

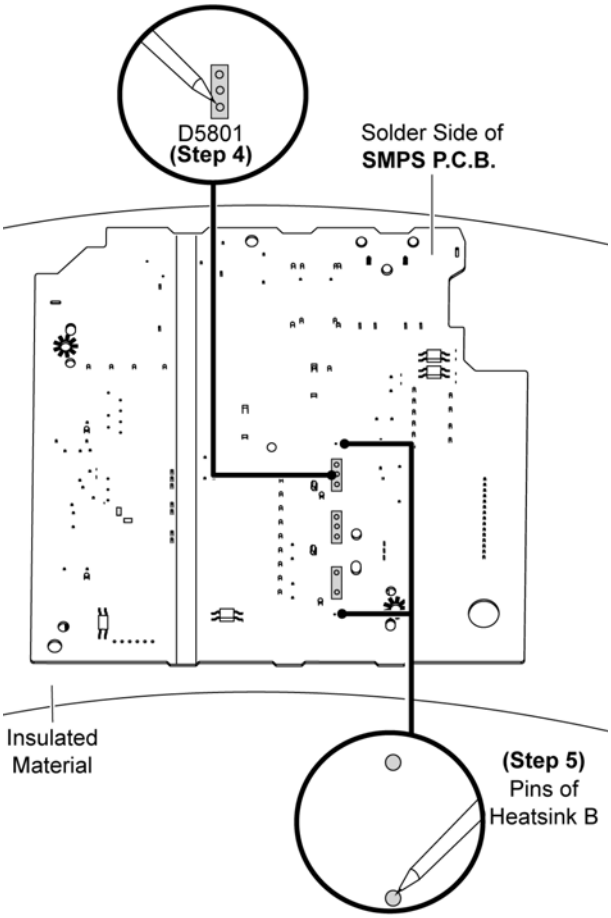


## 11.24. Replacement of Rectifier Diode (D5802)

- **Refer to "Disassembly of SMPS P.C.B.".**

### 11.24.1. Disassembly of Rectifier Diode (D5802)

**Step 1** Desolder pins of the Rectifier Diode (D5802) on the solder side of the SMPS P.C.B..
**Step 2** Desolder pins of the Heatsink B.

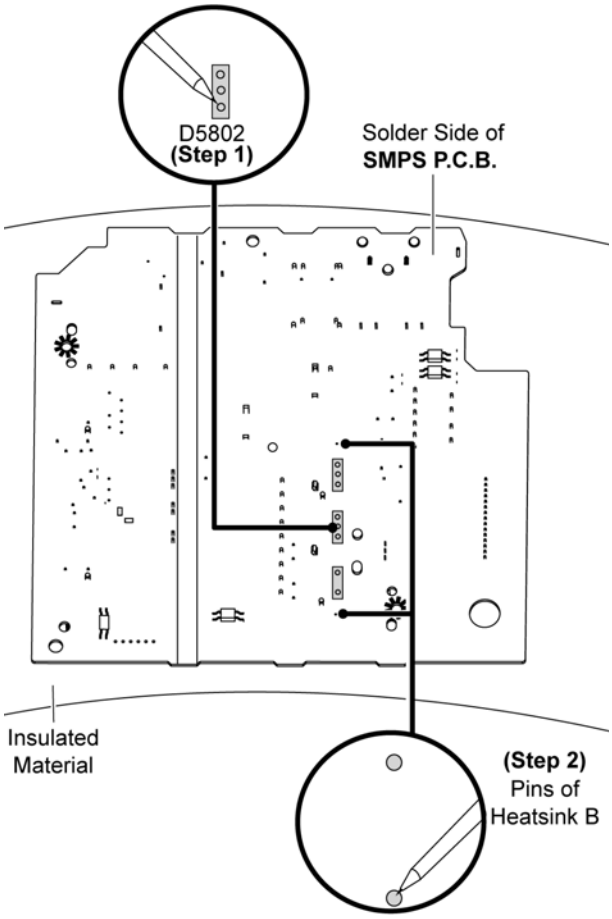

**Step 3** Remove 1 screw at Rectifier Diode (D5802).

**Step 4** Remove the Rectifier Diode (D5802) from the SMPS P.C.B..

**Caution: Avoid touching the Heatsink B due to its high temperature after prolong use. Touching it may lead to injuries.**

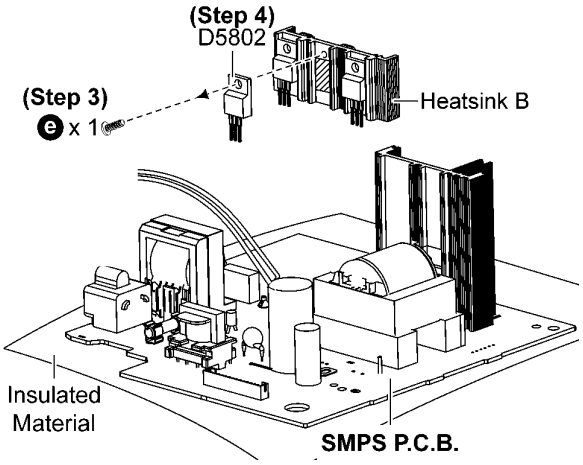


## 11.24.2. Assembly of Rectifier Diode (D5802)

**Step 1** Apply grease to the Heatsink B.

**Step 2** Screw the Rectifier Diode (D5802) to the Heatsink B.

**Caution: Ensure the Rectifier Diode (D5802) is tightly screwed to the Heatsink B.**

**Step 3** Fix the Heatsink B with Rectifier Diode (D5802) on the SMPS P.C.B..

**Caution: Ensure pins of the Rectifier. Diode (D5802) is properly inserted into the SMPS P.C.B..**

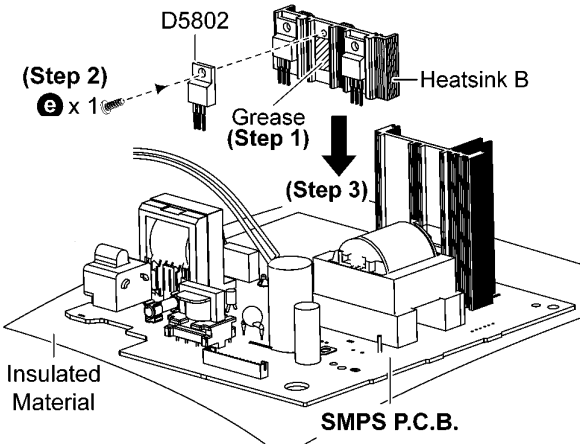


**Step 4** Solder pins of the Rectifier Diode (D5802) on the solder side of the SMPS P.C.B..

**Step 5** Solder pins of the Heatsink B..

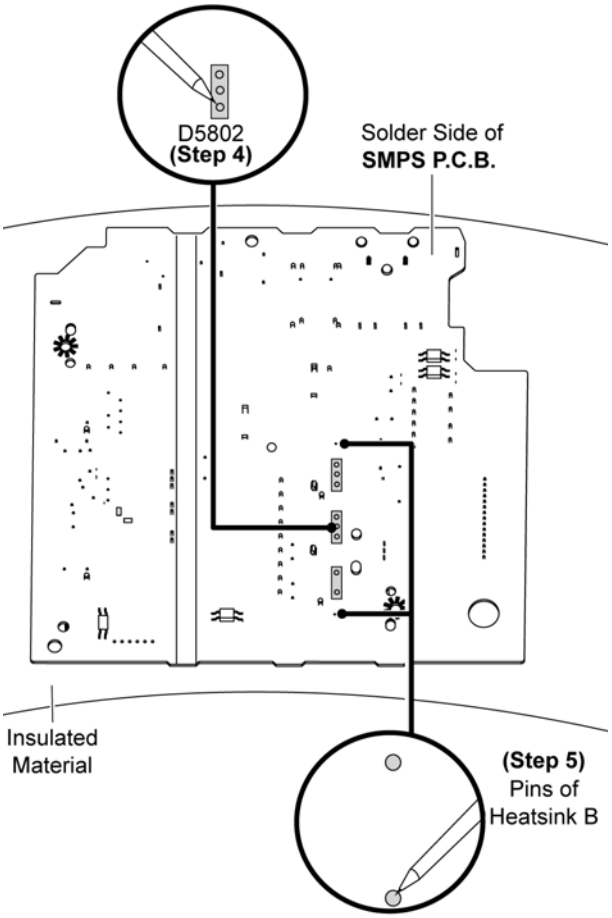

## 11.25. Replacement of Regulator Diode (D5803)

- **Refer to "Disassembly of SMPS P.C.B.".**

### 11.25.1. Disassembly of Rectifier Diode (D5803)

**Step 1** Desolder pins of the Rectifier Diode (D5803) on the solder side of the SMPS P.C.B..

**Step 2** Desolder pins of the Heatsink B.

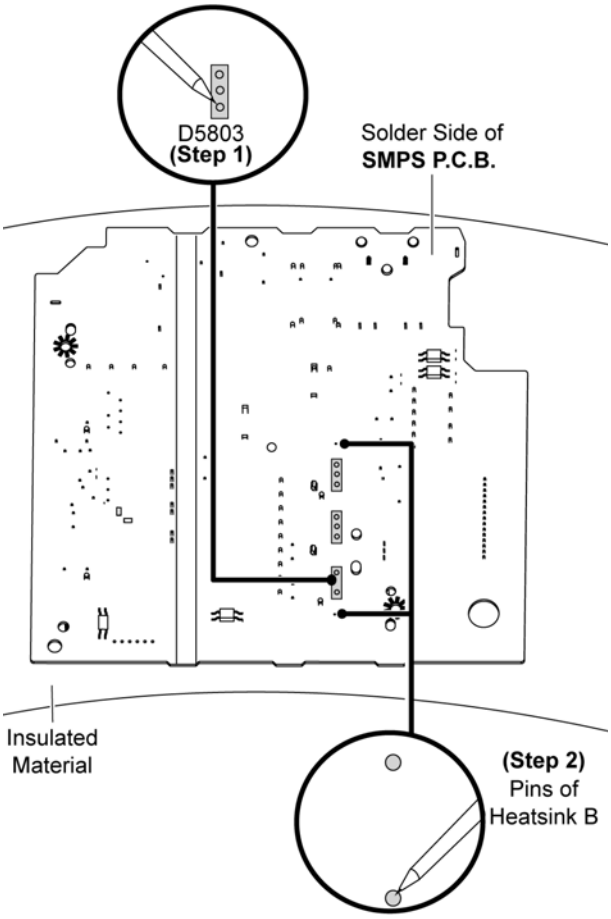


**Step 3** Remove 1 screw at Rectifier Diode (D5803).

**Step 4** Remove the Rectifier Diode (D5803) from the SMPS P.C.B..

**Caution: Avoid touching the Heatsink B due to its high temperature after prolonged use. Touching it may lead to injuries.**

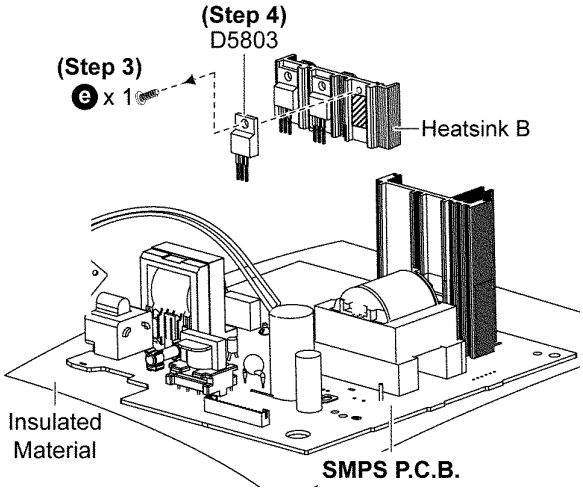


### 11.25.2. Assembly of Rectifier Diode (D5803)

**Step 1** Apply grease to the Heatsink B.

**Step 2** Screw the Rectifier diode (D5803) to the Heatsink B.

**Caution: Ensure the Rectifier Diode (D5803) is tightly screwed to the Heatsink B.**

**Step 3** Fix the Heatsink B with Rectifier Diode (D5803) on SMPS P.C.B..

**Caution: Ensure pins of the Rectifier Diode (D5803) are properly inserted into the SMPS P.C.B..**

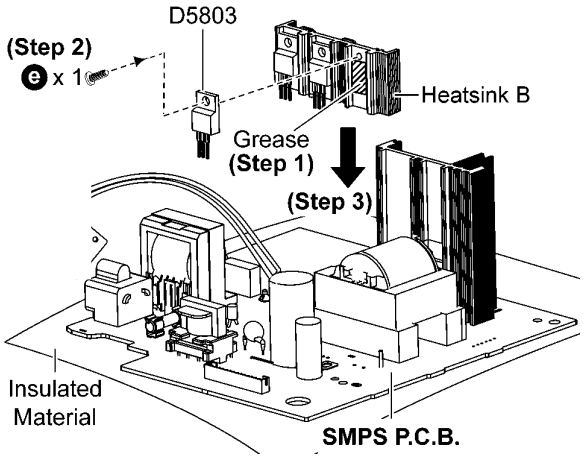

**Step 4** Solder pins of the Rectifier Diode (D5803) on the solder side of the SMPS P.C.B..
**Step 5** Solder pins of the Heatsink B.

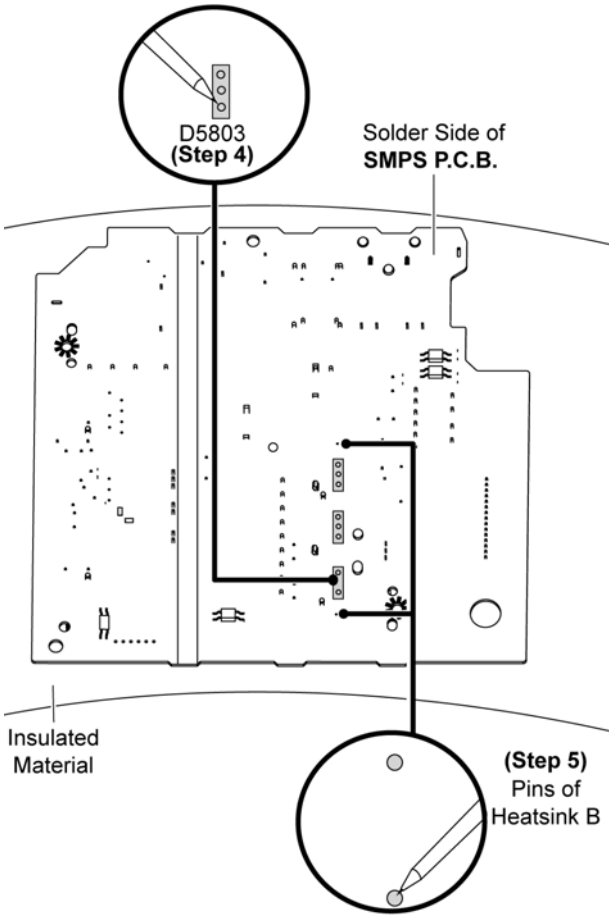


## 11.26. Disassembly of CD Mechanism Unit (BRS11C)

- **Refer to "Disassembly of Top Cabinet".**
- **Refer to "Disassembly of Front Panel Unit".**
- **Refer to "Disassembly of D-Amp P.C.B.".**

**Step 1** Detach 15P Cable Wire at the connector (CN5802) on SMPS P.C.B..

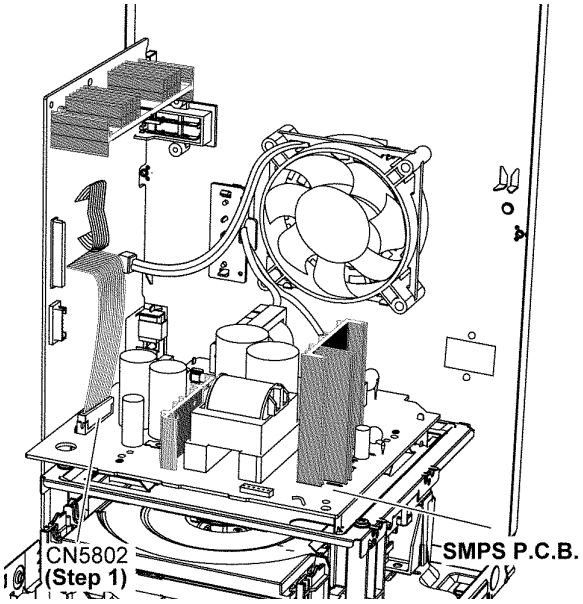


**Step 2** Remove 2 screws.

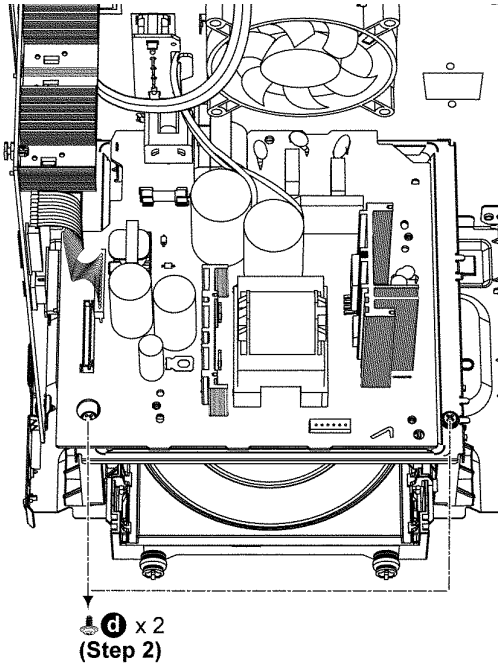

**Step 3** Remove 2 screws.

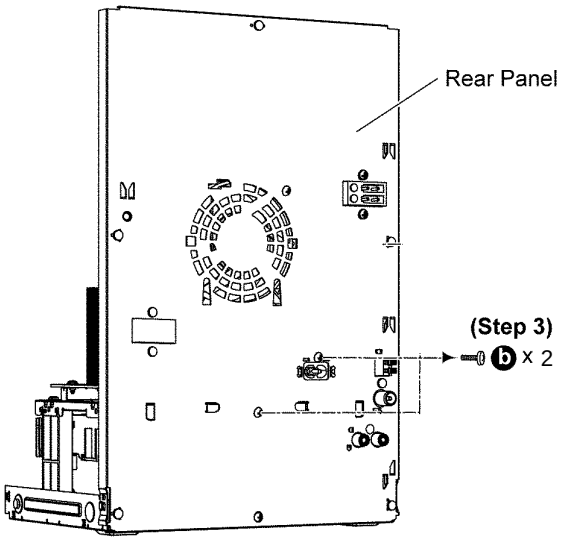


**Step 4** Lift up and remove the SMPS Inner Chassis Unit.

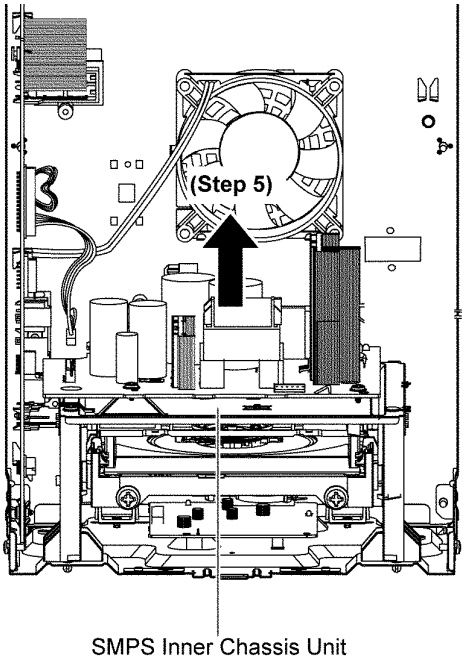


**Caution: During assembling, ensure that the SMPS Inner Chassis is catched onto the Rear Panel properly.**

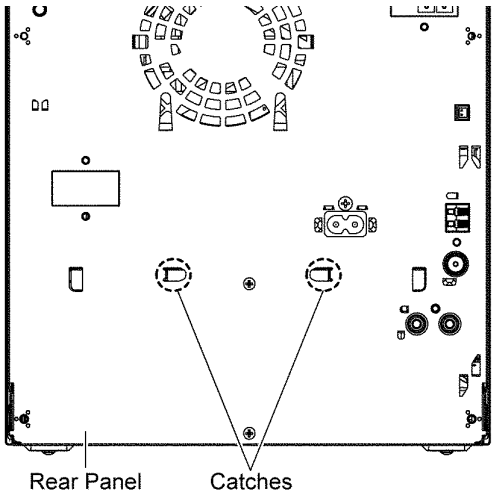

**Step 5** Remove 2 screws.

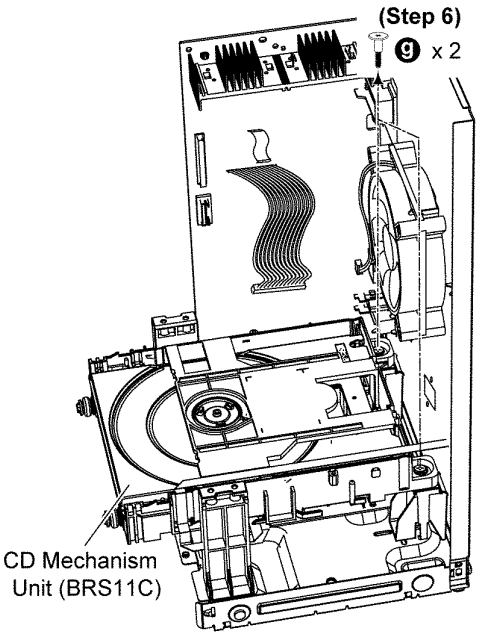


**Step 7** Slightly lift up the CD Mechanism Unit (BRS11C) as shown.

**Caution: Do not exert too much force as it may damage the wiring within.**

**Step 8** Detach 10P FFC at the connector (FP8251) on CD Servo P.C.B..

**Step 9** Detach 24P FFC at the connector (FP8201) on CD Servo P.C.B..

**Step 10** Remove the CD Mechanism Unit (BRS11C).

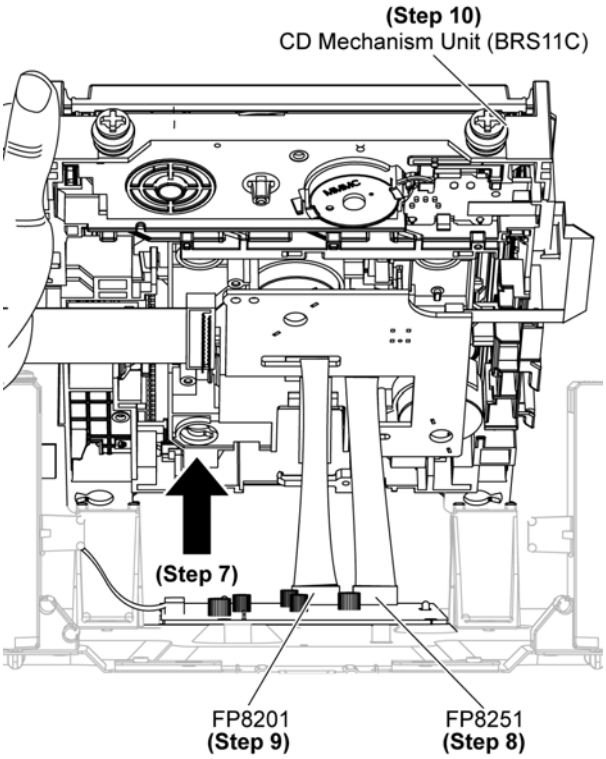


## 11.27. Disassembly of CD Interface P.C.B.

- **Refer to "Disassembly of CD Mechanism Unit (BRS11C)".**

**Step 1** Remove 3 screws.

**Step 2** Desolder pins of the motor (M7301).

**Step 3** Desolder pins of the motor (M7302).

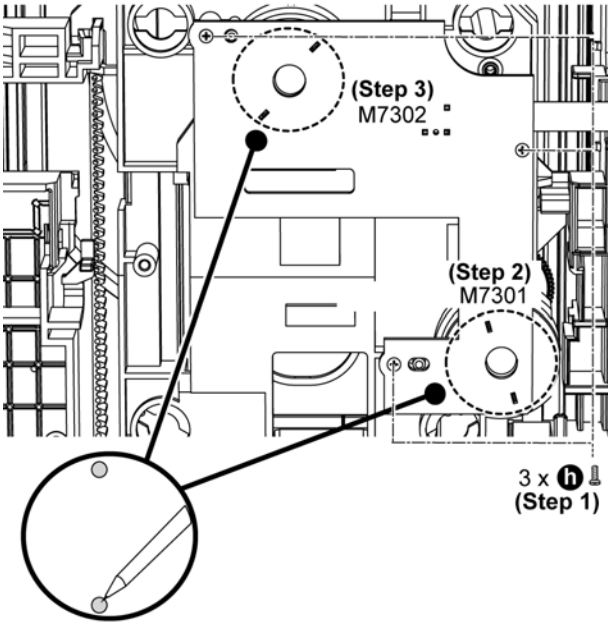

## 11.28. Disassembly of CD Servo P.C.B.

- **Refer to "Disassembly of CD Mechanism Unit (BRS11C)".**

**Step 1** Remove 2 screws.
**Step 2** Detach 30P FFC at the connector (FP8101).

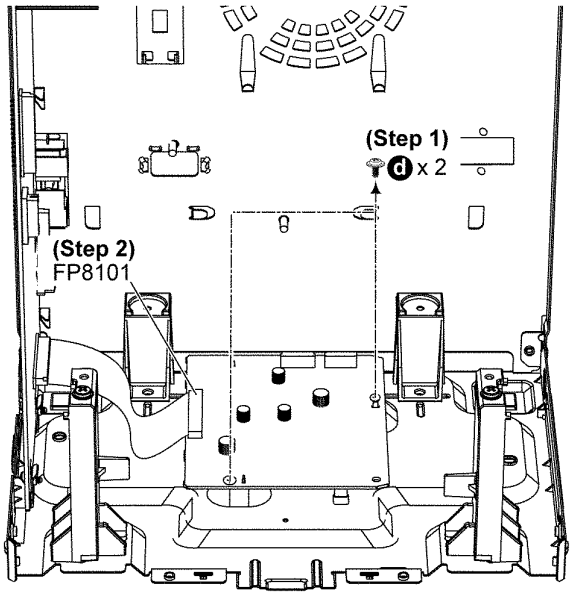


**Step 3** Remove the CD Servo P.C.B..

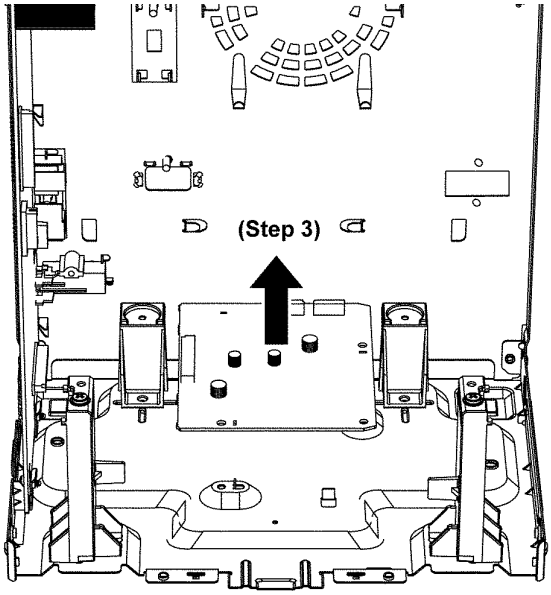


## 11.29. Disassembly of Rear Panel

- **Refer to "Disassembly of Top Cabinet".**

**Step 1** Remove 11 screws.

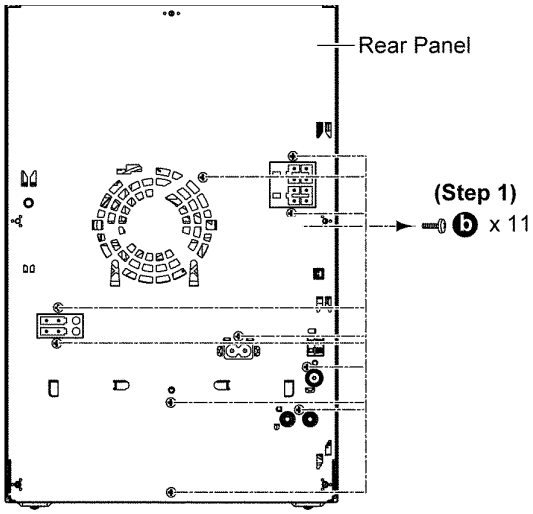

**Step 2** Lift up SMPS Inner Chassis Unit to release the catch between the SMPS Inner Chassis Unit & the Rear Panel.

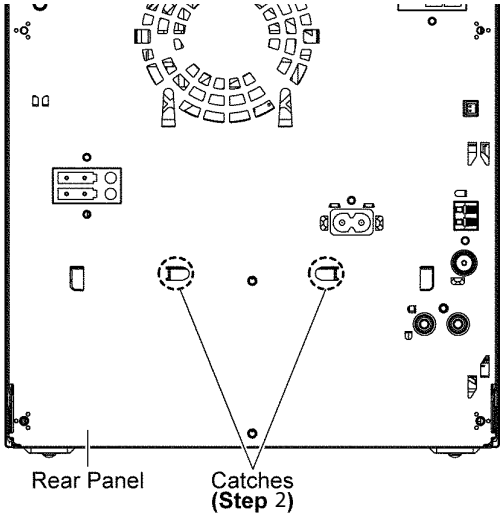


**Step 3** Release 2 tabs.
**Step 4** Remove the Rear Panel.

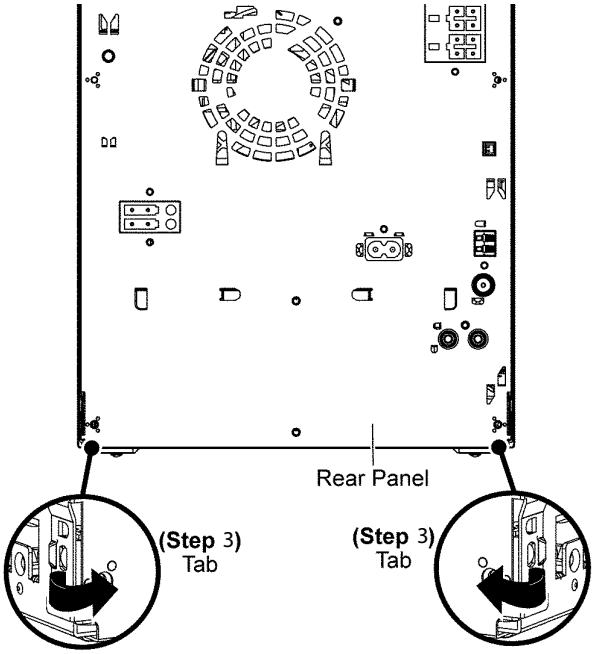

# 12 Service Position

**Note: For description of the disassembly procedures, see the Section 11.**

## 12.1. Checking and Repairing of Main P.C.B.

**Step 1** Remove Top Cabinet.
**Step 2** Main P.C.B. can be checked & repaired at its original position.

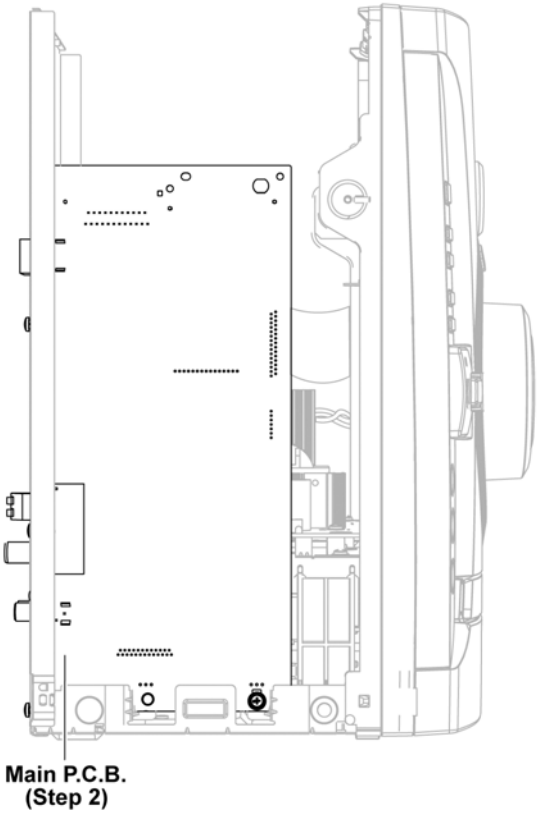


## 12.2. Checking and Repairing of D-Amp P.C.B.

**Step 1** Remove Top Cabinet.
**Step 2** D-Amp P.C.B. can be checked & repaired as diagram shown.

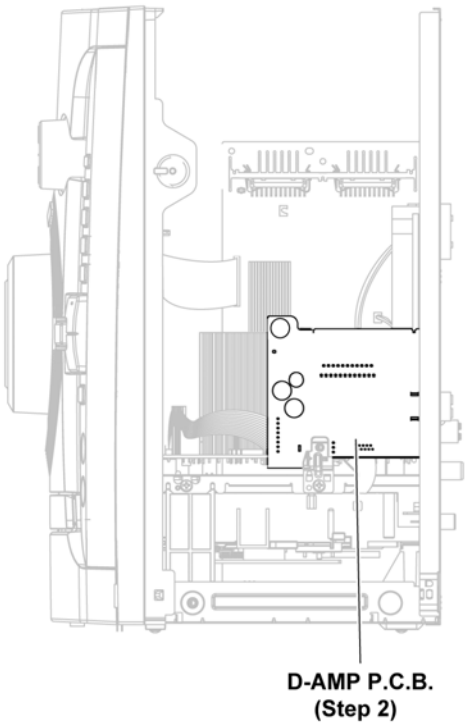


## 12.3. Checking and Repairing of Panel P.C.B.

**Step 1** Remove Top Cabinet.
**Step 2** Remove Front Panel Unit.
**Step 3** Attach 5P Cable Wire to the connector (CN2700) on Main P.C.B..
**Step 4** Attach 27P FFC to the connector (CN2003) on Main P.C.B..
**Step 5** Panel P.C.B. can be checked and repaired as diagram shown.

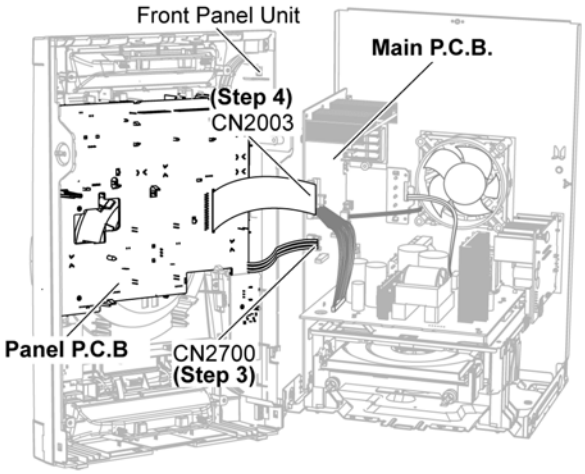

## 12.4. Checking and Repairing of SMPS P.C.B.

**Step 1** Remove Top Cabinet.
**Step 2** Remove Front Panel Unit.
**Step 3** Remove D-Amp P.C.B..
**Step 4** Remove SMPS P.C.B..
**Step 5** Place the Front Panel Unit as diagram shown.
**Step 7** Place the SMPS P.C.B., D-Amp P.C.B. on the insulated material.
**Step 8** Attach 27P FFC to the connector (CN2003) on the Main P.C.B..
**Step 9** Attach 9P FFC to the connector (CN5902) on the D-Amp P.C.B..

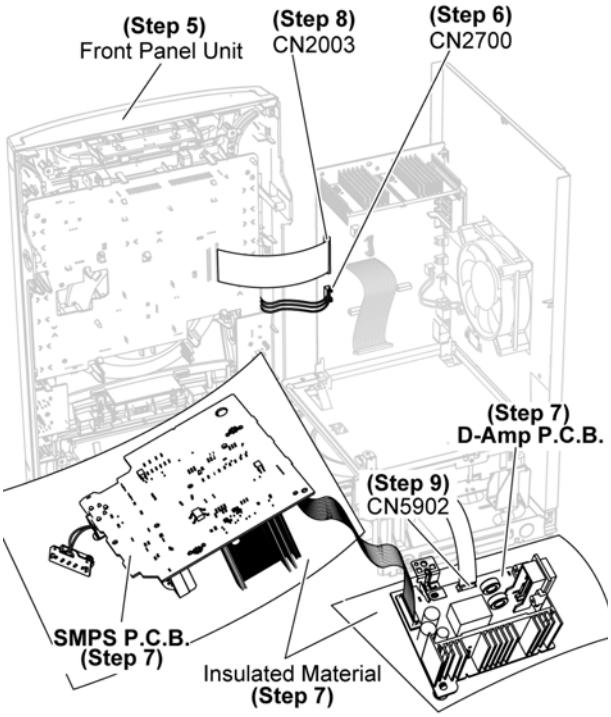


**Step 10** Extend the Cable Wire with extension Cable Wire (REX1527 15P Cable Wire) from CN2007 on the Main P.C.B. to CN5802 on the SMPS P.C.B..
**Step 11** Connect 6P Cable Wire to the connector (CN5801) on the SMPS P.C.B..
**Step 12** SMPS P.C.B. can be checked & repaired as diagram shown.

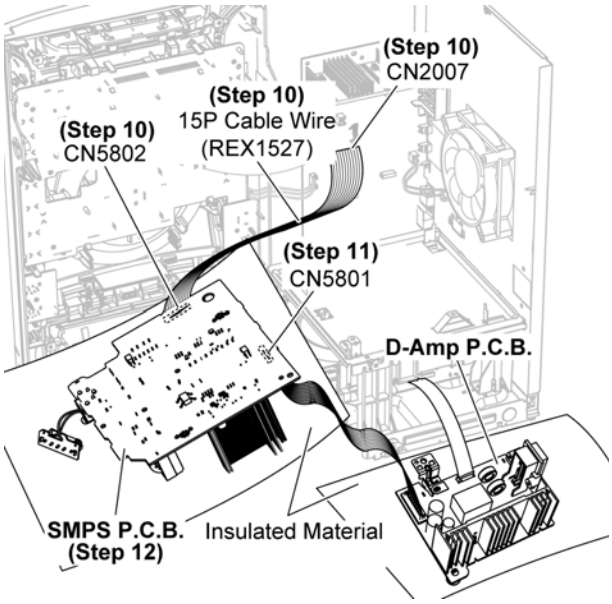

## 12.5. Checking and Repairing of CD Servo P.C.B. (Side A)

**Step 1** Remove Top Cabinet.
**Step 2** Remove Front Panel Unit.
**Step 3** Remove D-Amp P.C.B..
**Step 4** Remove SMPS Inner Chassis Unit.
**Step 5** Remove CD Mechanism Unit (BRS11C).
**Step 6** Remove Main P.C.B..
**Step 7** Remove Rear Panel.
**Step 8** Place the Front Panel Unit, D-Amp P.C.B., SMPS Inner Chassis Unit, CD Mechanism Unit (BRS11C), Main P.C.B as diagram shown.
**Step 9** Attach 27P FFC to the connector (CN2003) on the Main P.C.B..
**Step 10** Attach 5P Cable Wire to the connector (CN2700) on the Main P.C.B..
**Step 11** Extend the Cable Wire with extension Cable Wire (REX1527 15P Cable Wire) from CN2007 on the Main P.C.B. to CN5802 on the SMPS P.C.B..
**Step 12** CD Servo P.C.B. Side A can be checked and repaired as diagram shown.

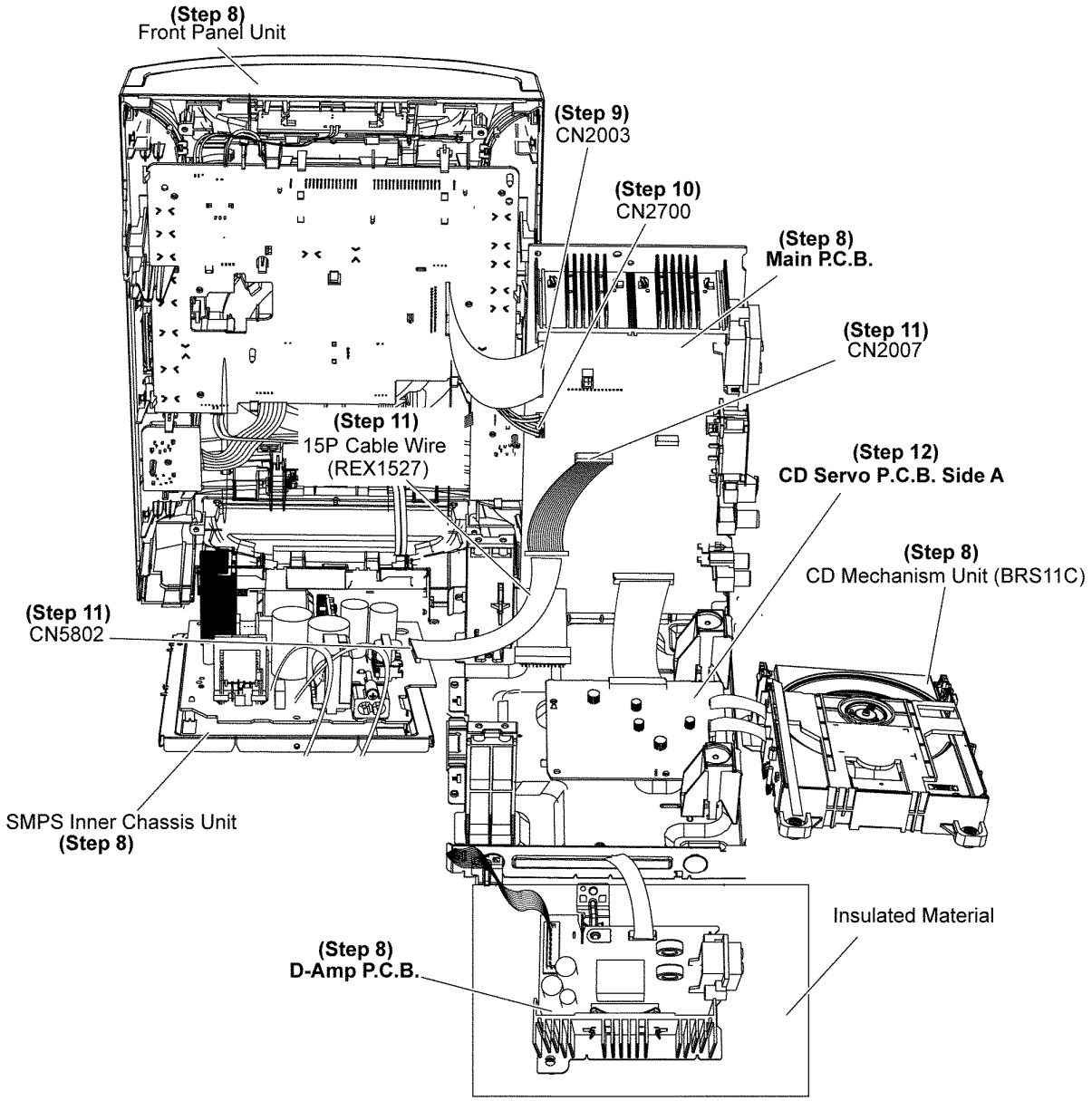

## 12.6. Checking and Repairing of CD Servo P.C.B. (Side B)

- Refer to “Checking and repairing of CD Servo P.C.B. (Side A)”.

**Step 1** Remove 2 screws.
**Step 2** Flip the Servo P.C.B. as illustration show.

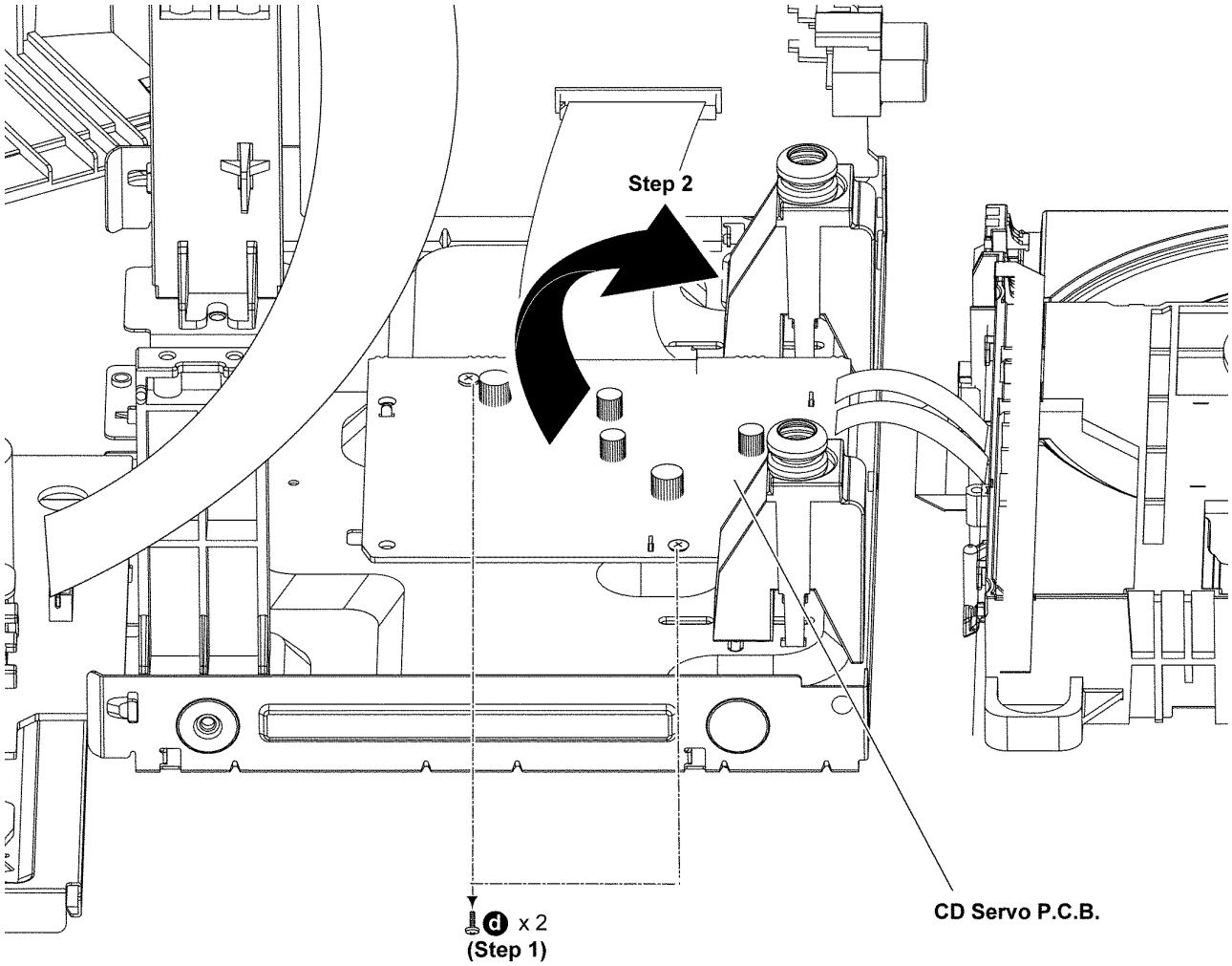

**Step 3** Place the CD Servo P.C.B. on the insulated material.
**Step 4** CD Servo P.C.B. Side B can be checked and repaired as diagram shown.

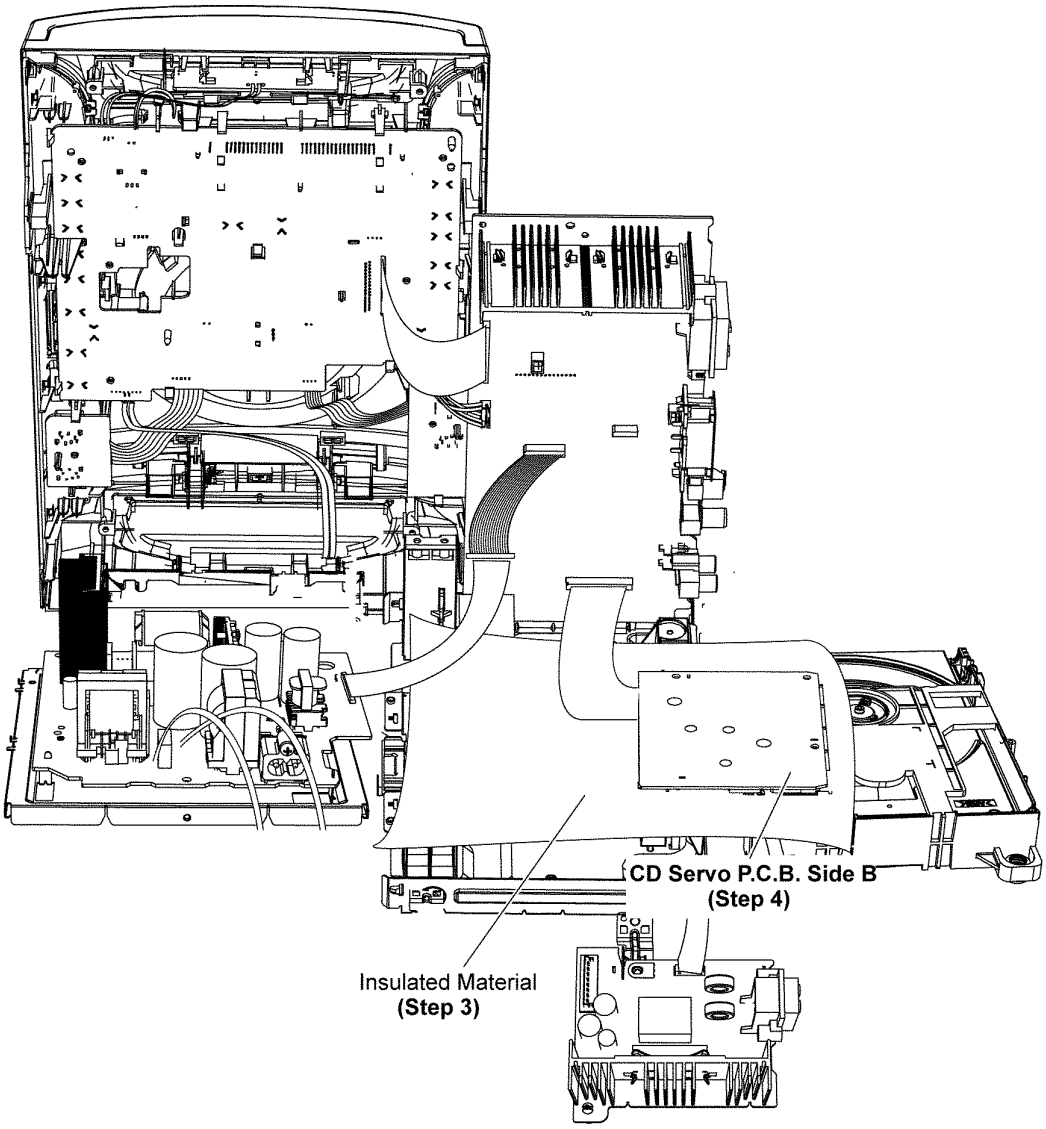

# 13 Simplified Block Diagram

## 13.1. Power Block Diagram

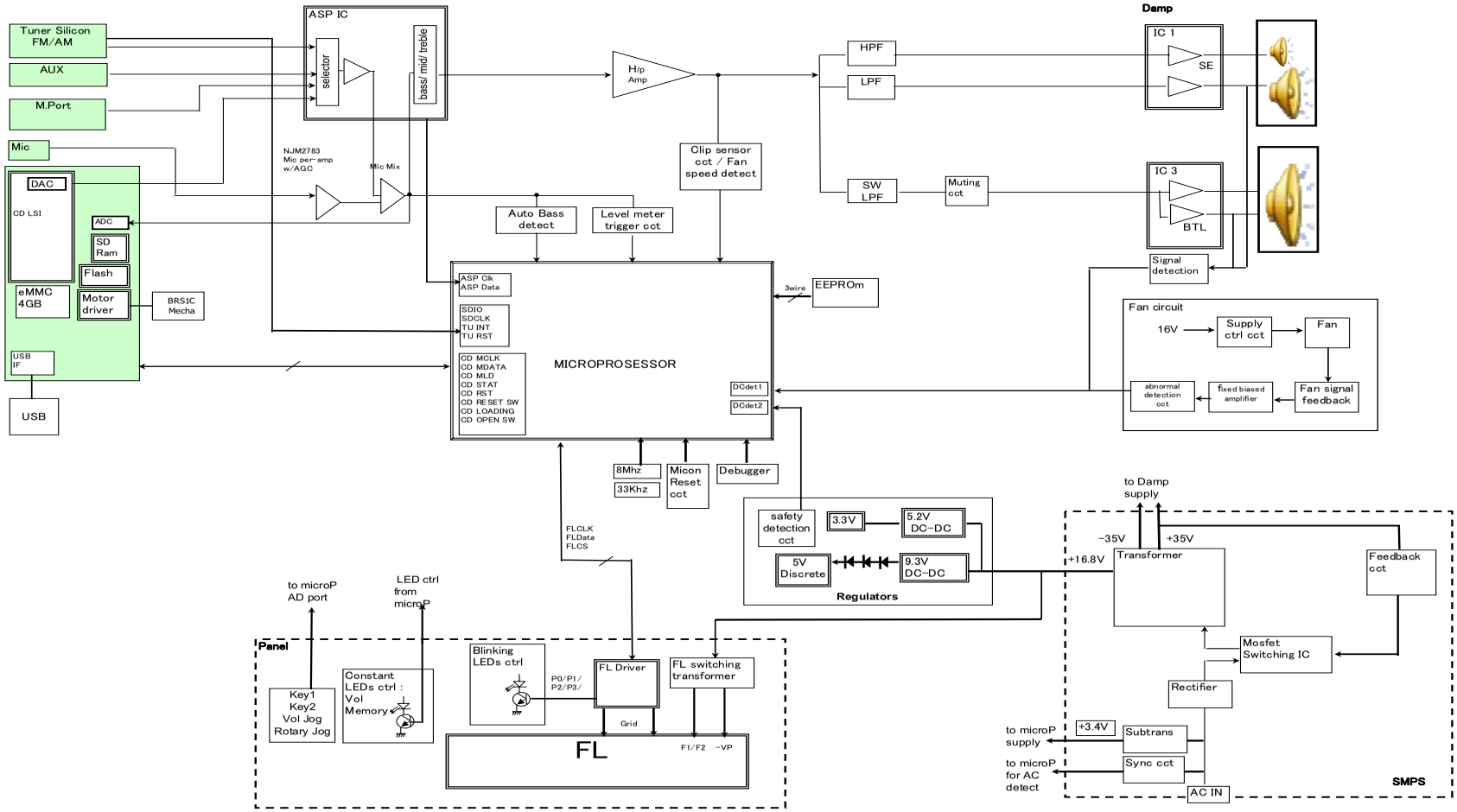

# 14 Block Diagram

## 14.1. Servo & System Control

: CD AUDIO INPUT SIGNAL LINE  : AUDIO OUTPUT SIGNAL LINE  : USB SIGNAL LINE

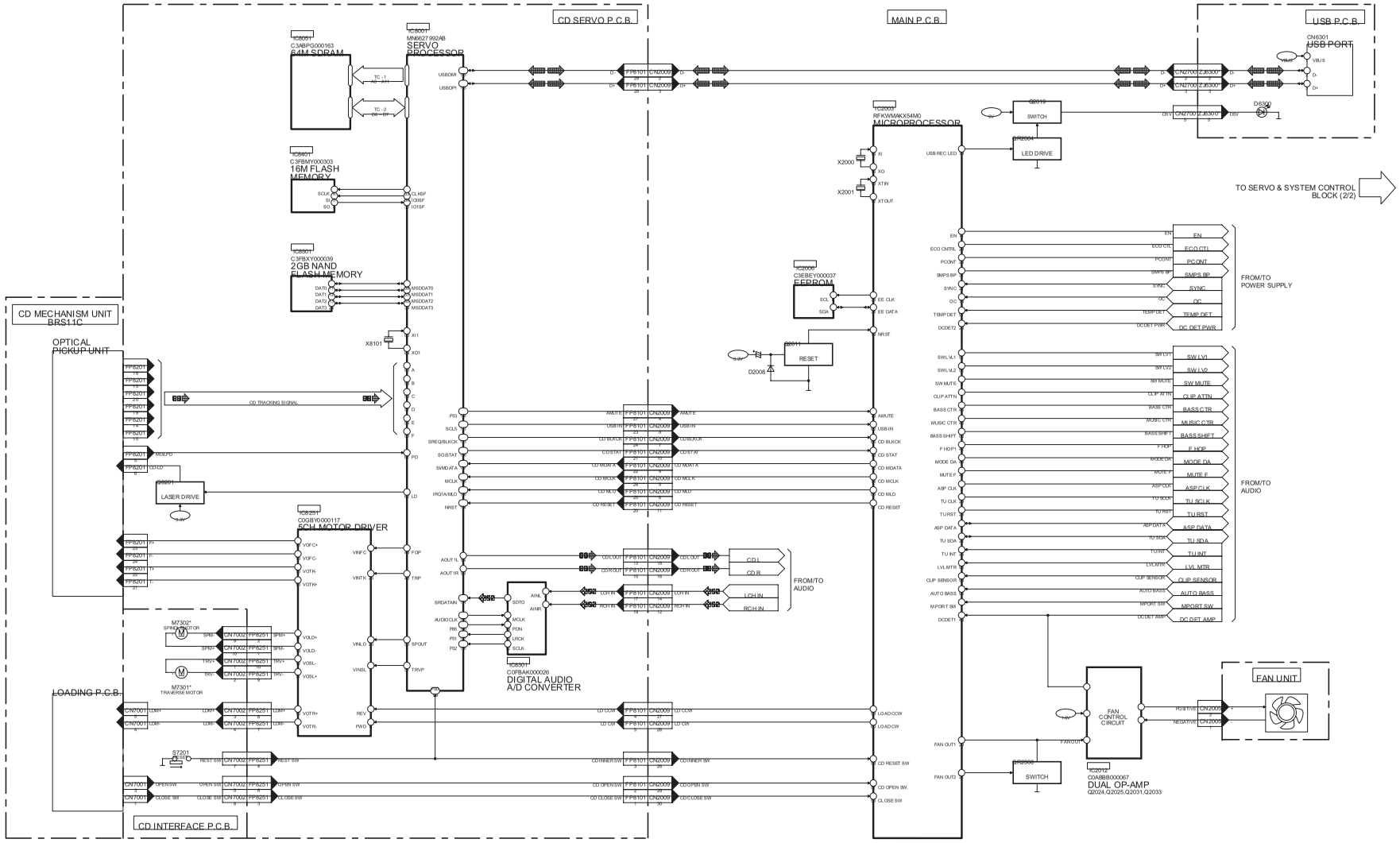


NOTE: " * " REF IS FOR INDICATION ONLY

SA-AKX74 SERVO & SYSTEM CONTROL (1/2) BLOCK DIAGRAM

: CD AUDIO INPUT SIGNAL LINE : AUDIO OUTPUT SIGNAL LINE : USB SIGNAL LINE

MAIN P.C.B.

*Este material se encuentra sin programar, debe ser programado.

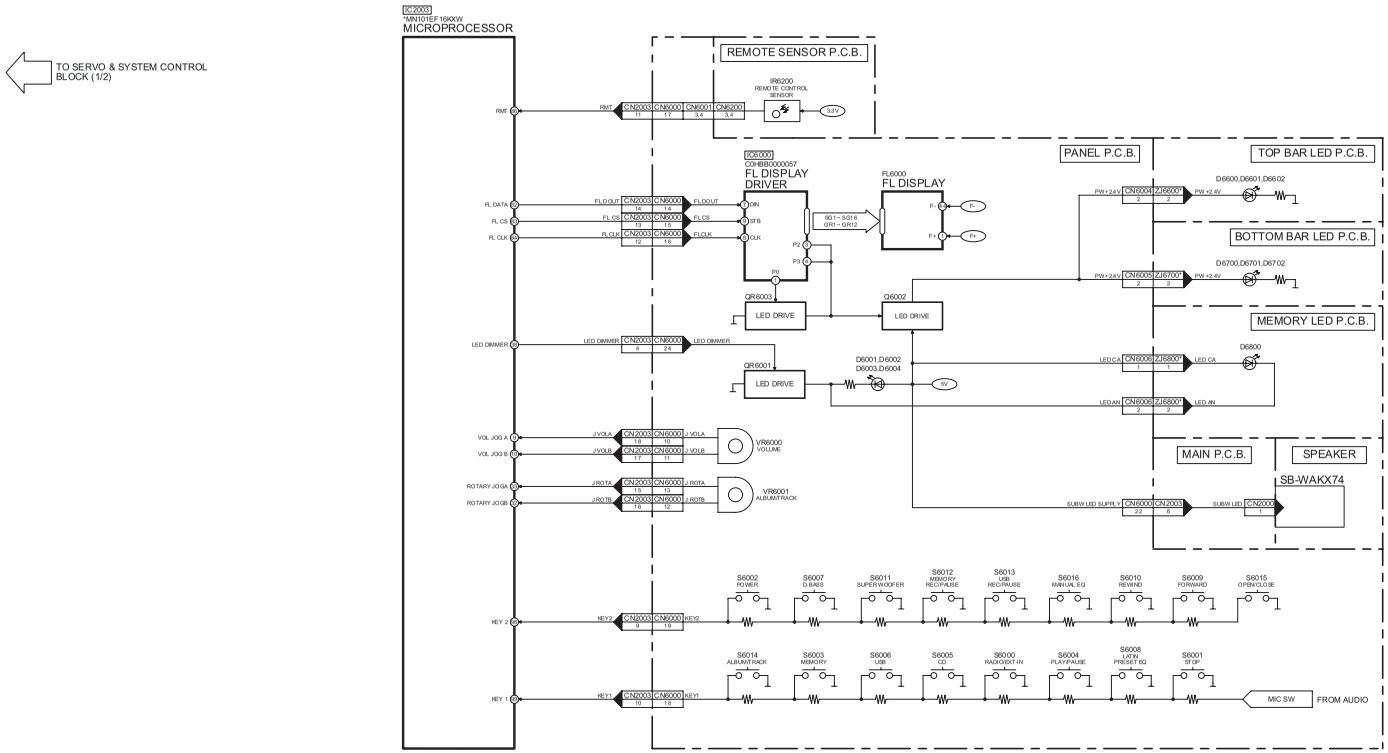


NOTE: “ * ” REF IS FOR INDICATION ONLY

SA-AKX74 SERVO & SYSTEM CONTROL (2/2) BLOCK DIAGRAM

## 14.2. IC Terminal Chart

| TC | IC8051 64M SDRAM | | SIGNAL NAME | IC8001 SERVO PROCESSOR | |
|---|---|---|---|---|---|
| | PORT NAME | PIN NO | | PIN NO | PORT NAME |
| 1 | A0 | 23 | A0 | 14 | A0 |
| | A1 | 24 | A1 | 15 | A1 |
| | A2 | 25 | A2 | 16 | A2 |
| | A3 | 26 | A3 | 17 | A3 |
| | A4 | 29 | A4 | 20 | A4 |
| | A5 | 30 | A5 | 21 | A5 |
| | A6 | 31 | A6 | 22 | A6 |
| | A7 | 32 | A7 | 23 | A7 |
| | A8 | 33 | A8 | 24 | A8 |
| | A9 | 34 | A9 | 25 | A9 |
| | A10 | 22 | At0 | 13 | A10 |
| | A11 | 35 | A11 | 26 | A11 |

| TC | IC8051 64M SDRAM | | SIGNAL NAME | IC8001 SERVO PROCESSOR | |
|---|---|---|---|---|---|
| | PORT NAME | PIN NO | | PIN NO | PORT NAME |
| 2 | DQ0 / DQ15 | 2 / 53 | D0 | 142 | D0 |
| | DQ1 / DQ14 | 4 / 51 | D1 | 143 | D1 |
| | DQ2 / DQ13 | 5 / 50 | D2 | 144 | D2 |
| | DQ3 / DQ12 | 7 / 48 | D3 | 2 | D3 |
| | DQ4 / DQ11 | 8 / 47 | D4 | 3 | D4 |
| | DQ5 / DQ10 | 10 / 45 | D5 | 4 | D5 |
| | DQ6 / DQ9 | 11 / 44 | D6 | 5 | D6 |
| | DQ7 / DQ8 | 13 / 42 | D7 | 6 | D7 |

## 14.3. Audio

: CD AUDIO INPUT SIGNAL LINE  : AUX/TUNER/MUSIC PORT/MIC AUDIO INPUT SIGNAL LINE  : AUDIO OUTPUT SIGNAL LINE  : AM SIGNAL LINE  : FM SIGNAL LINE

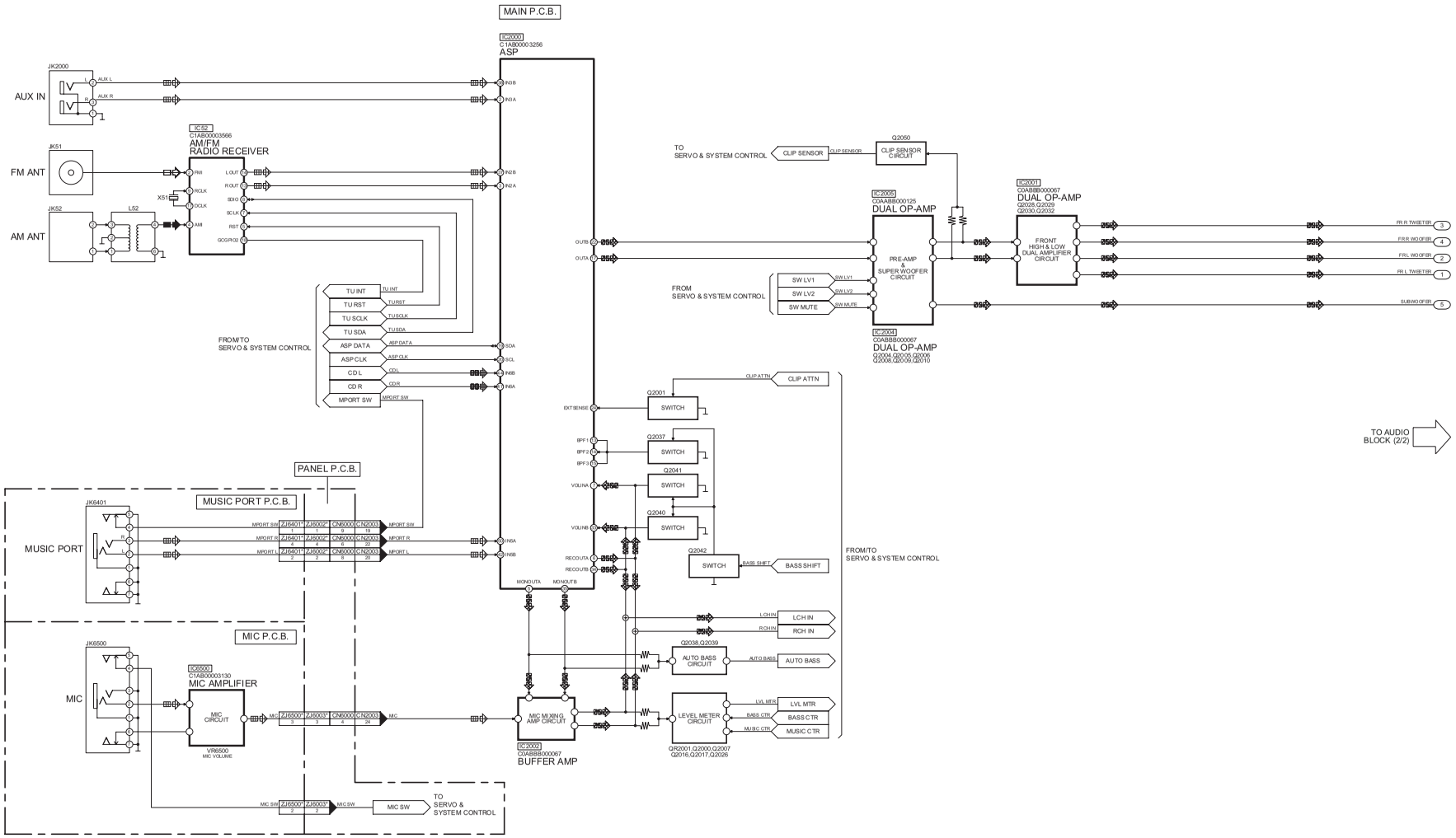


NOTE: " * " REF IS FOR INDICATION ONLY

SA-AKX74 AUDIO (1/2) BLOCK DIAGRAM

: CD AUDIO INPUT SIGNAL LINE : AUX/TUNER/MUSIC PORT/MIC AUDIO INPUT SIGNAL LINE : AUDIO OUTPUT SIGNAL LINE : AM SIGNAL LINE : FM SIGNAL LINE

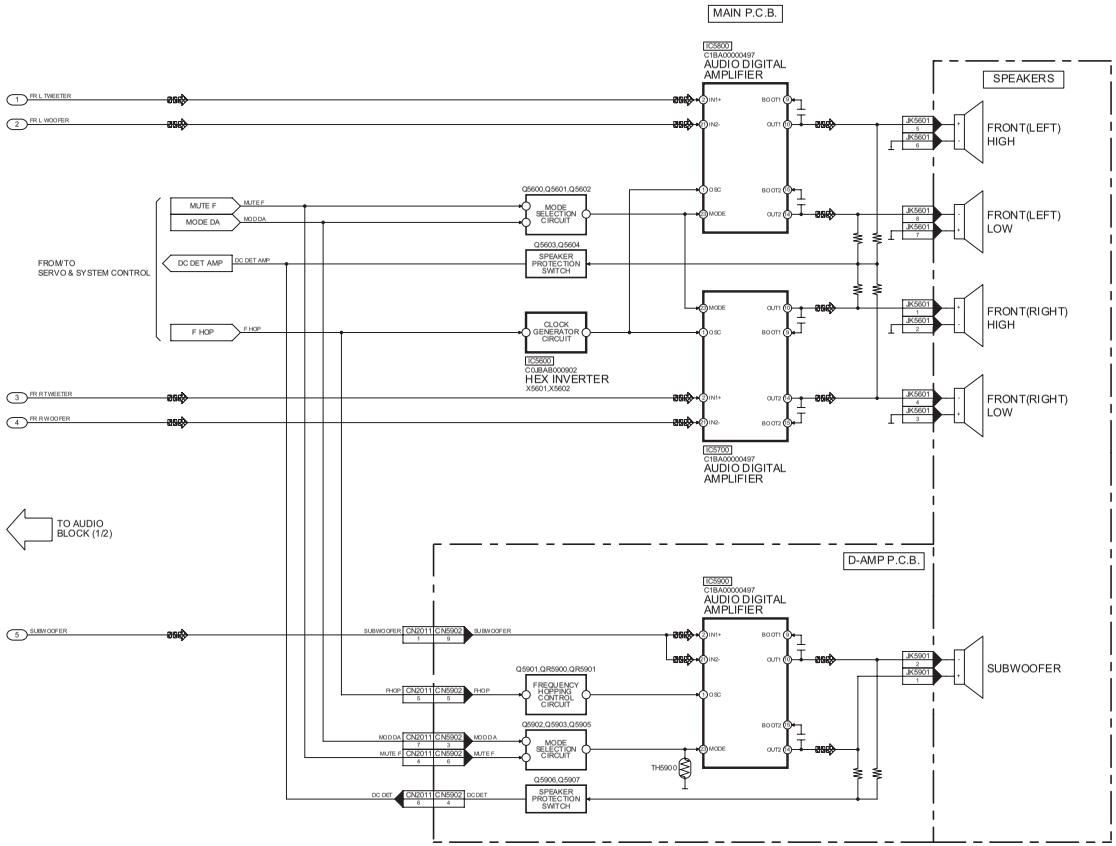


SA-AKX74 AUDIO (2/2) BLOCK DIAGRAM

## 14.4. Power Supply

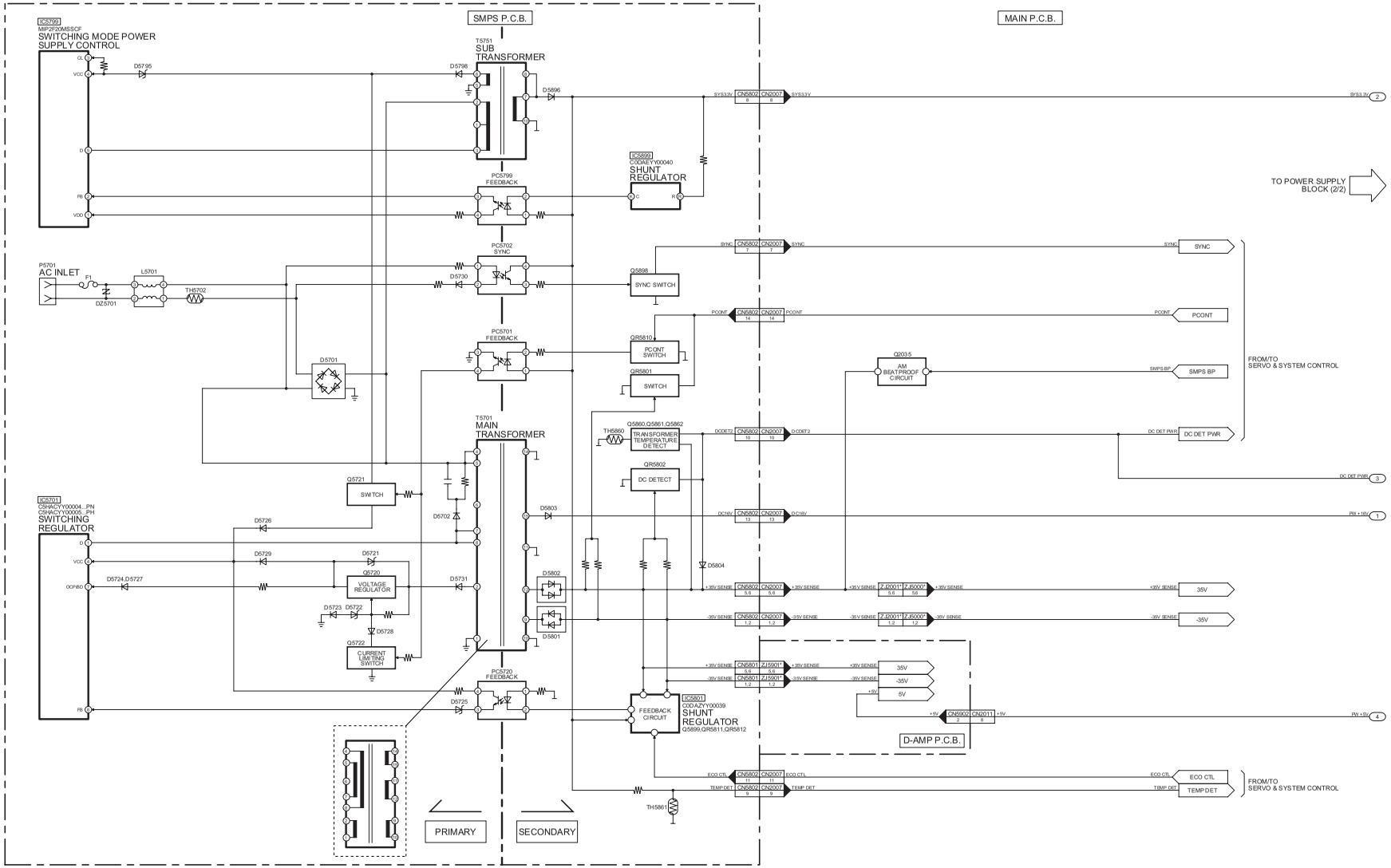


NOTE: " * " REF IS FOR INDICATION ONLY

SA-AKX74 POWER SUPPLY (1/2) BLOCK DIAGRAM

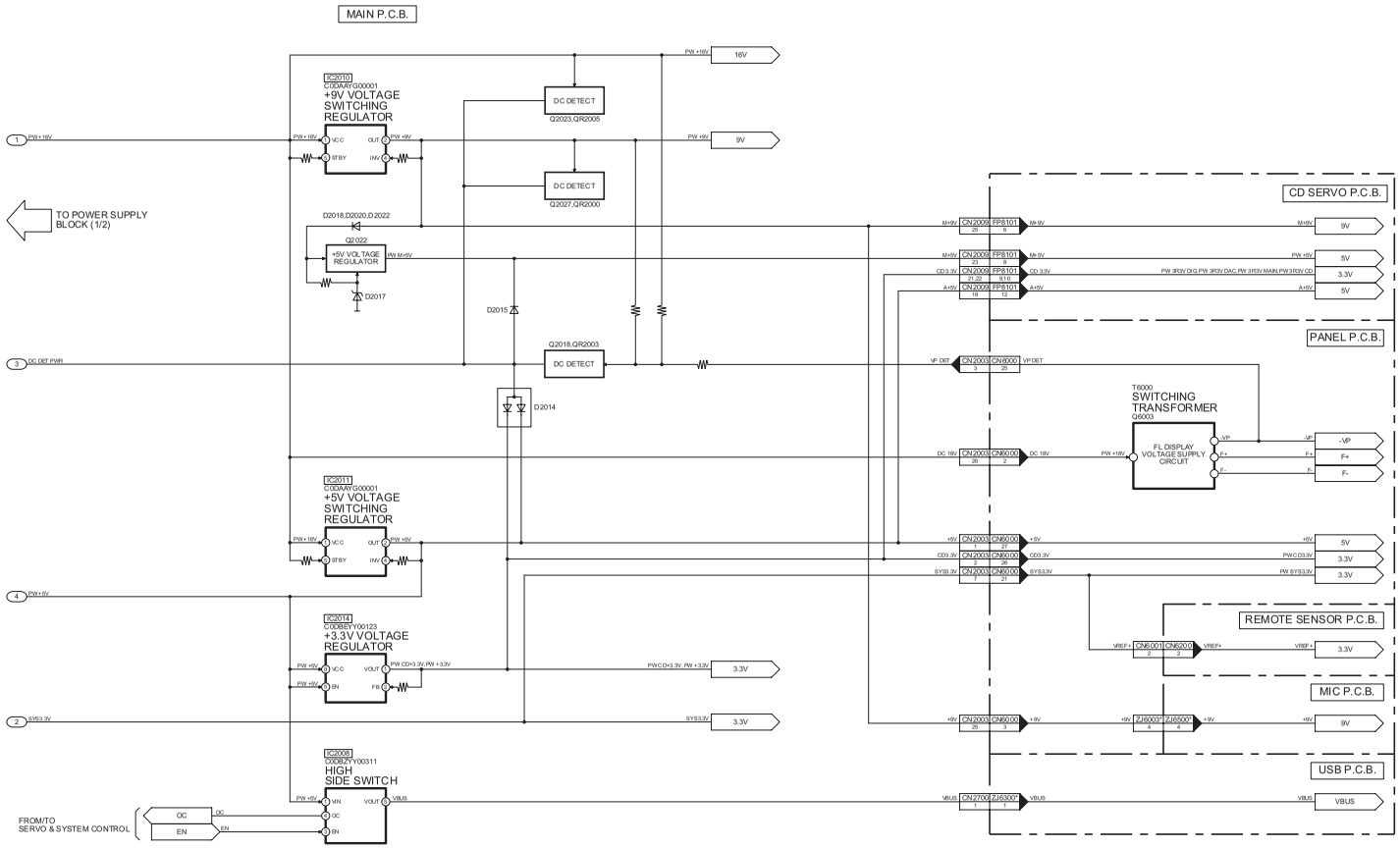


SA-AKX74 POWER SUPPLY (2/2) BLOCK DIAGRAM

# 15 Wiring Connection Diagram

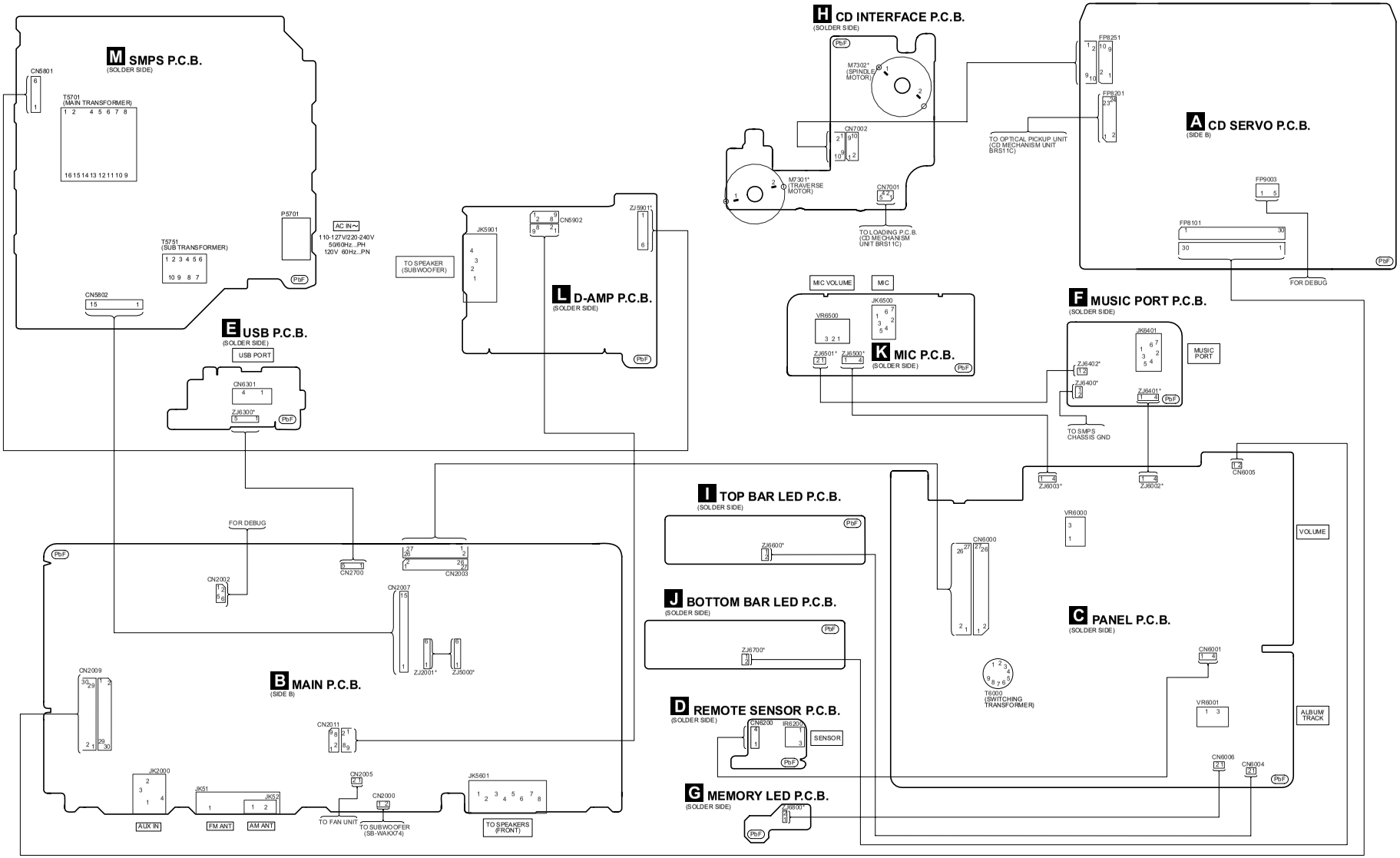


NOTE: " * " REF IS FOR INDICATION ONLY.

SA-AKX74 WIRING CONNECTION DIAGRAM

# 16 Schematic Diagram

## 16.1. Schematic Diagram Notes

- **This schematic diagram may be modified at any time with the development of new technology.**

**Notes:**

| | |
|---|---|
| **S6000:** | Radio/EXT-IN switch. |
| **S6001:** | Stop (■) switch. |
| **S6002:** | Power (⏻/|) switch. |
| **S6003:** | Memory switch. |
| **S6004:** | Play/Pause (▶ / ❚❚) switch. |
| **S6005:** | CD switch. |
| **S6006:** | USB switch. |
| **S6007:** | D.BASS switch. |
| **S6008:** | Latin Preset EQ switch. |
| **S6009:** | Forward ( ▶▶ / ▶▶| ) switch. |
| **S6010:** | Rewind ( |◀◀ / ◀◀ ) switch. |
| **S6011:** | Super Woofer switch. |
| **S6012:** | Memory Rec/ Pause switch. |
| **S6013:** | USB Rec/ Pause switch. |
| **S6014:** | Album/Track switch. |
| **S6015:** | Open/Close switch (⏏). |
| **S6016:** | Manual EQ switch. |
| **S7201:** | Reset switch. |
| **VR6000:** | Volume Jog. |
| **VR6001:** | Album/Track Jog. |
| **VR6500:** | Mic Jog. |

- Important safety notice:

  Components identified by ⚠ mark have special characteristics important for safety.
  Furthermore, special parts which have purposes of fire-retardant (resistors), high quality sound (capacitors), low-noise (resistors), etc are used.
  When replacing any of components, be sure to use only manufacturer's specified parts shown in the parts list.

- In case of AC rated voltage Capacitors, the part no. and values will be indicated in the Schematic Diagram.
  AC rated voltage capacitors:
  C5700, C5701, C5704, C5705, C5708

- **Resistor**
  Unit of resistance is OHM [Ω] (K=1,000, M=1,000,000).

- **Capacitor**
  Unit of capacitance is μF, unless otherwise noted. F=Farads, pF=pico-Farad.

- **Coil**
  Unit of inductance is H, unless otherwise noted.

- *****

  REF IS FOR INDICATION ONLY.

- Voltage and signal line

  — : +B signal line
  - - - : -B signal line
  : CD Audio input signal line
  : AUX/Tuner/Music Port/ Mic Audio input signal line
  : Audio output signal line
  : USB signal line
  : AM signal line
  : FM signal line

CAUTION: FOR CONTINUED PROTECTION AGAINST FIRE HAZARD, REPLACE ONLY WITH SAME TYPE F1 8A 125V FUSE

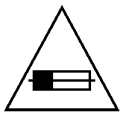

RISK OF FIRE-REPLACE FUSE AS MARKED.

**FUSE CAUTION**

These symbols located near the fuse indicates that the fuse used is a fast operating type. For continued protection againts fire harzard, replace with the same type fuse. fro rating, refer to the marking adjacent to the symbol.

## 16.2. CD Servo Circuit

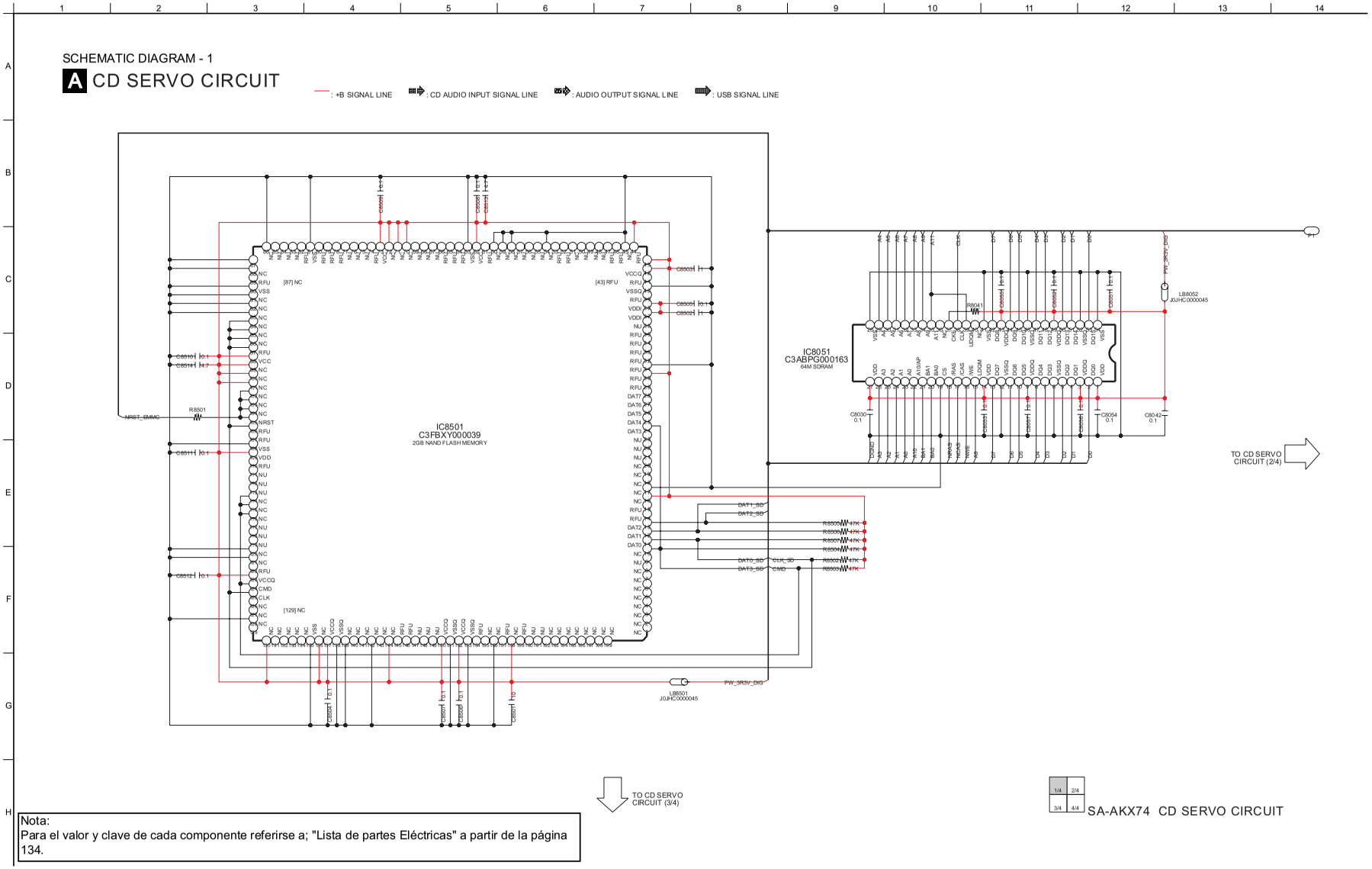


Nota:
Para el valor y clave de cada componente referirse a; "Lista de partes Eléctricas" a partir de la página 134.

SCHEMATIC DIAGRAM - 2

# A CD SERVO CIRCUIT

: +B SIGNAL LINE  : CD AUDIO INPUT SIGNAL LINE  : AUDIO OUTPUT SIGNAL LINE  : USB SIGNAL LINE

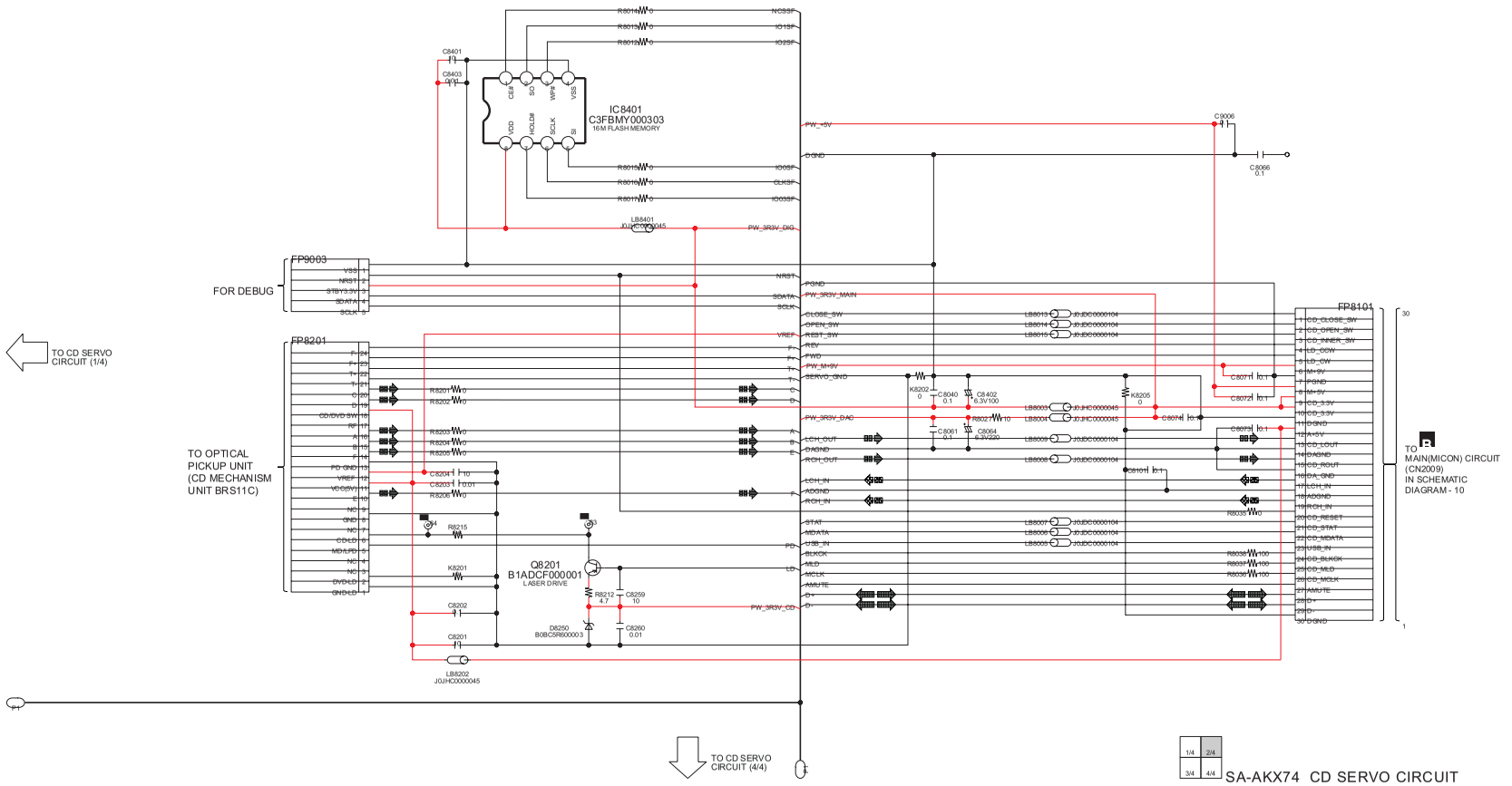


SA-AKX74 CD SERVO CIRCUIT

Nota:
Para el valor y clave de cada componente referirse a; "Lista de partes Eléctricas" a partir de la página 134.

SCHEMATIC DIAGRAM - 3

# A CD SERVO CIRCUIT

—— : +B SIGNAL LINE  : CD AUDIO INPUT SIGNAL LINE  : AUDIO OUTPUT SIGNAL LINE  : USB SIGNAL LINE

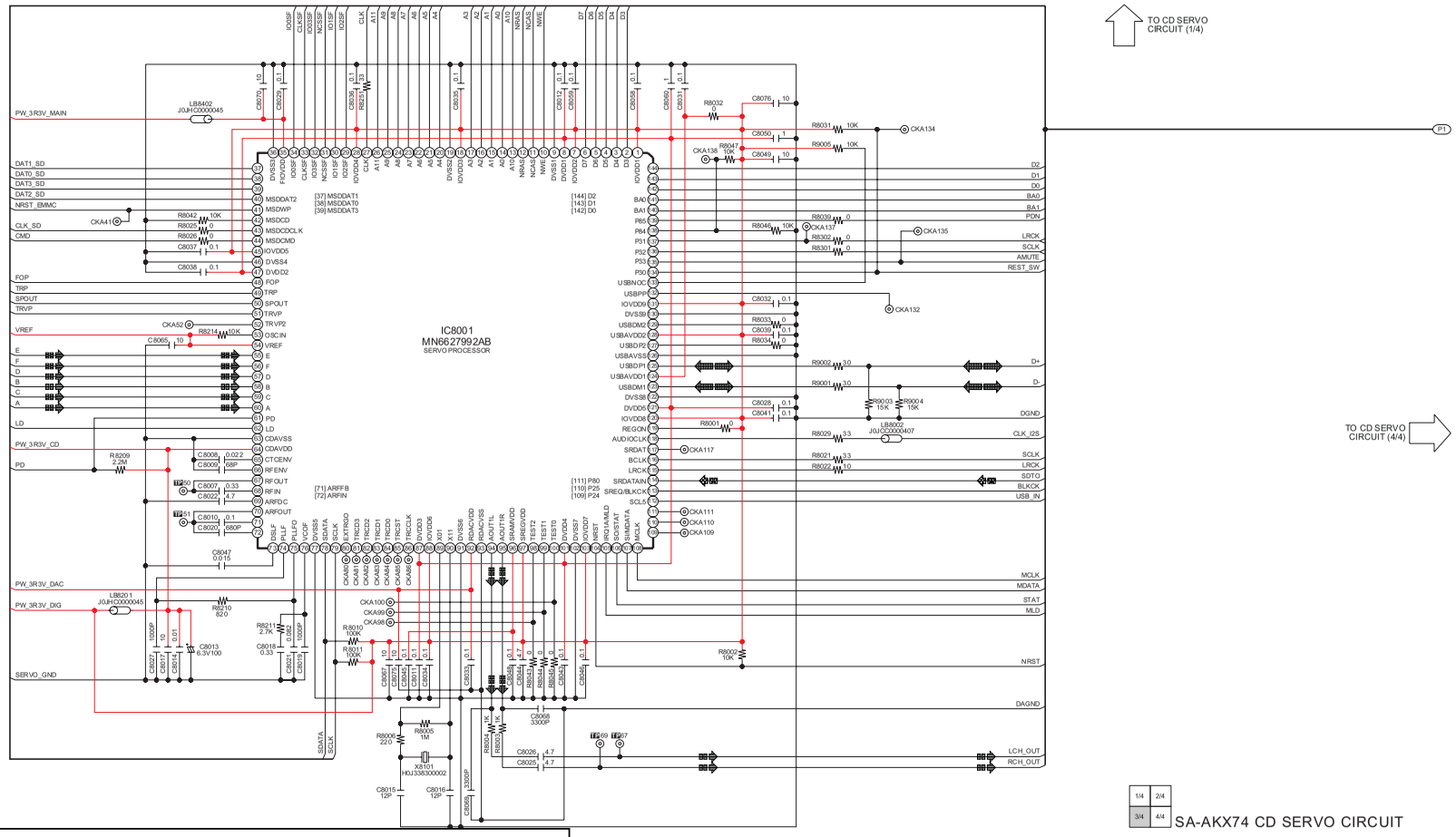


| 1/4 | 2/4 |
|---|---|
| 3/4 | 4/4 |

SA-AKX74 CD SERVO CIRCUIT

Nota:
Para el valor y clave de cada componente referirse a; "Lista de partes Eléctricas" a partir de la página 134.

SCHEMATIC DIAGRAM - 4

# A CD SERVO CIRCUIT

: +B SIGNAL LINE : CD AUDIO INPUT SIGNAL LINE : AUDIO OUTPUT SIGNAL LINE : USB SIGNAL LINE

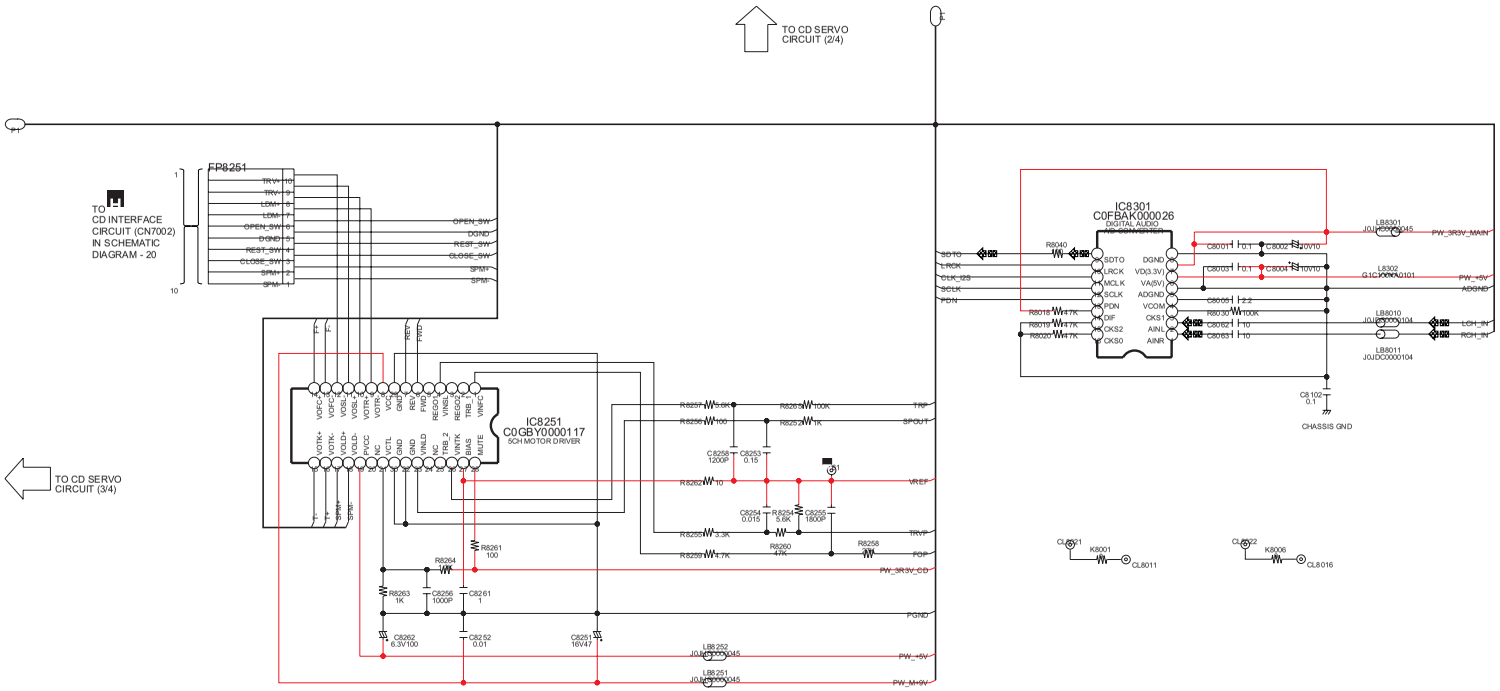

SA-AKX74 CD SERVO CIRCUIT

Nota:
Para el valor y clave de cada componente referirse a; "Lista de partes Eléctricas" a partir de la página 134.

## 16.3. Main(MICON) Circuit

SCHEMATIC DIAGRAM - 5

**B** MAIN(MICON) CIRCUIT

: +B SIGNAL LINE
: -B SIGNAL LINE
: CD AUDIO INPUT SIGNAL LINE
: AUX/TUNER/MUSIC PORT/MIC AUDIO INPUT SIGNAL LINE
: AUDIO OUTPUT SIGNAL LINE
: AM SIGNAL LINE
: FM SIGNAL LINE
: USB SIGNAL LINE

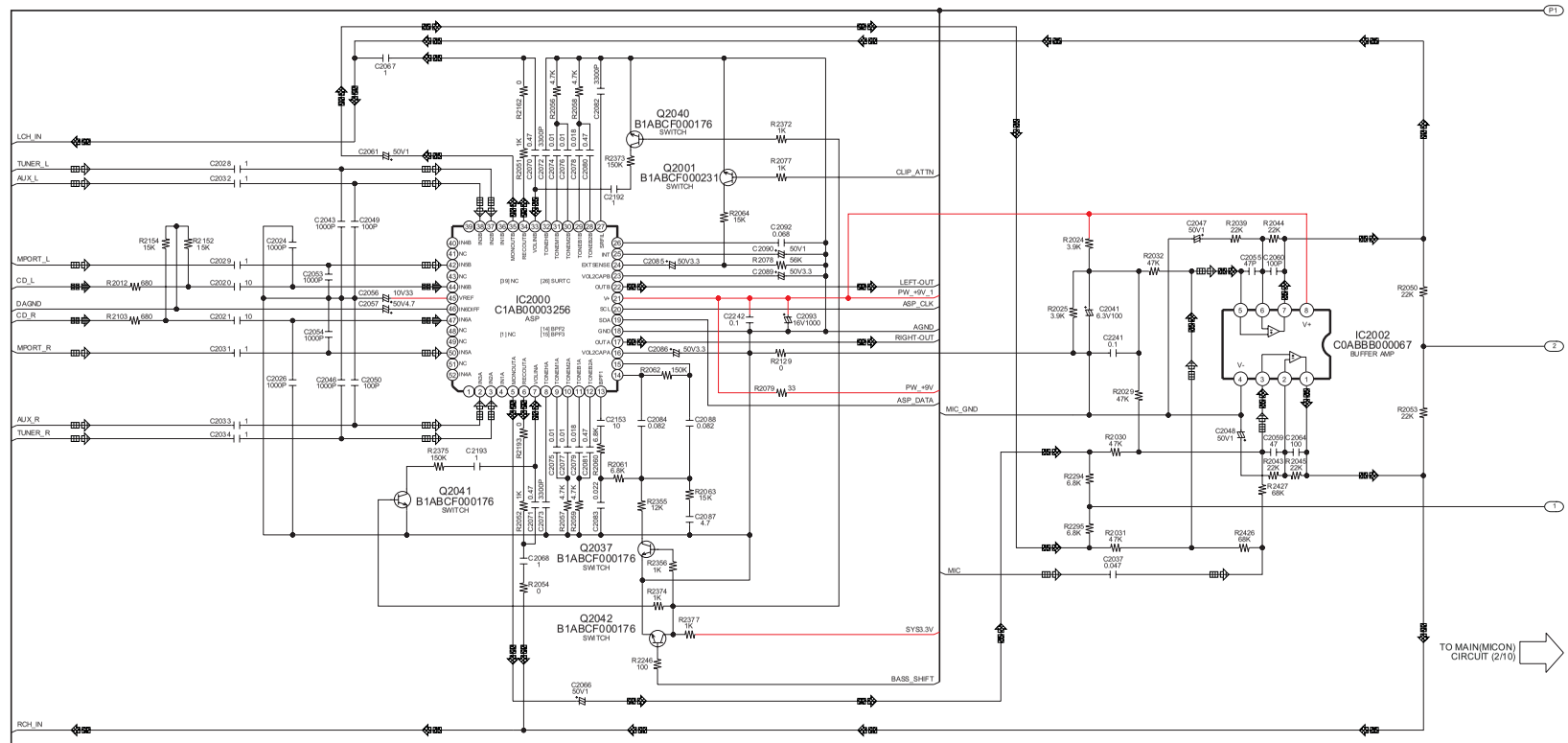


MI: MAIN(MICON): SCHEMATIC DIAGRAM - 5 ~ 14
DA: MAIN(D-AMP): SCHEMATIC DIAGRAM - 15 ~ 16

TO MAIN(MICON) CIRCUIT (6/10)

| 1/10 | 2/10 | 3/10 | 4/10 | 5/10 |
|---|---|---|---|---|
| 6/10 | 7/10 | 8/10 | 9/10 | 10/10 |

SA-AKX74 MAIN(MICON) CIRCUIT

Nota:
Para el valor y clave de cada componente referirse a; "Lista de partes Eléctricas" a partir de la página 134.

SCHEMATIC DIAGRAM - 6

# B MAIN(MICON) CIRCUIT

: +B SIGNAL LINE
: -B SIGNAL LINE
: CD AUDIO INPUT SIGNAL LINE
: AUX/TUNER/MUSIC PORT/MIC AUDIO INPUT SIGNAL LINE
: AUDIO OUTPUT SIGNAL LINE
: AM SIGNAL LINE
: FM SIGNAL LINE
: USB SIGNAL LINE

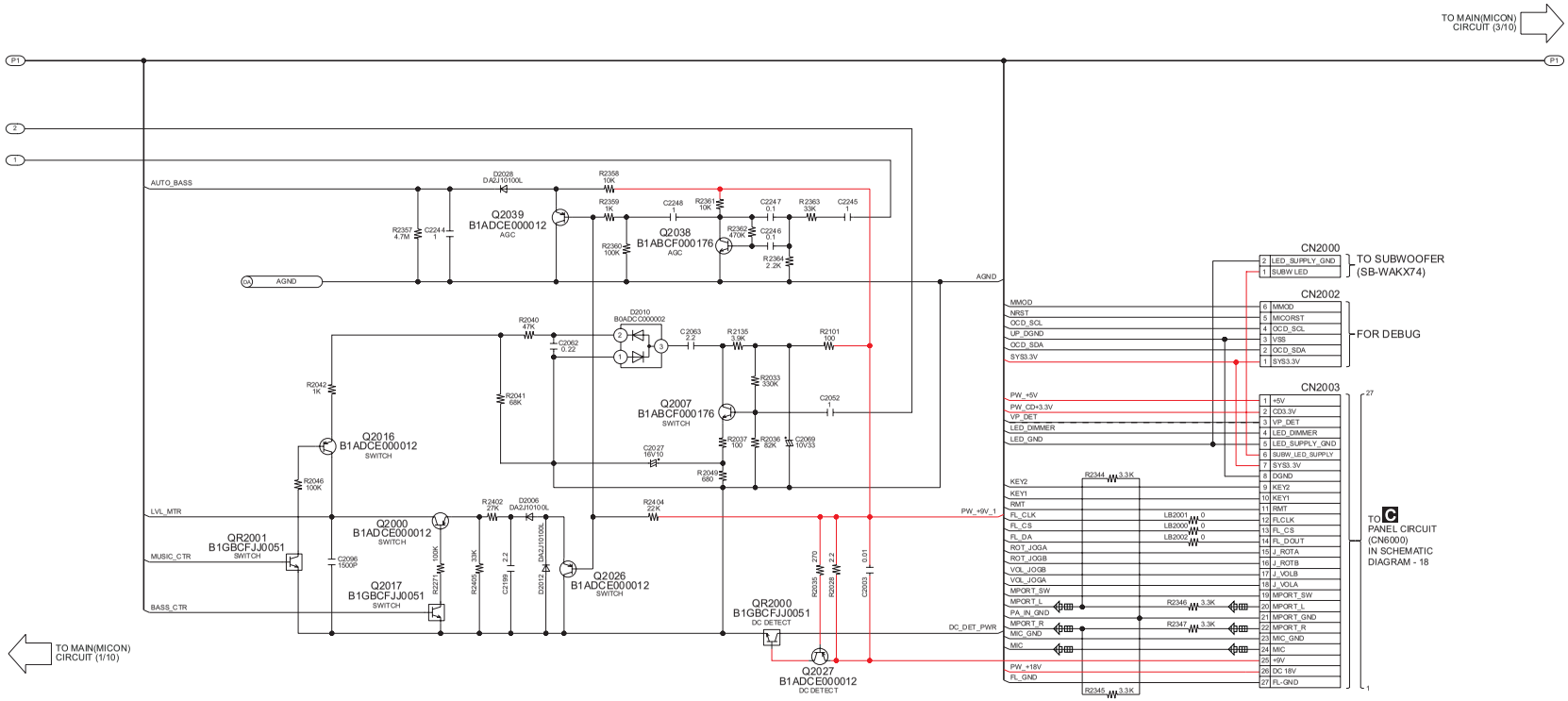


MI: MAIN(MICON): SCHEMATIC DIAGRAM - 5 ~ 14
DA: MAIN(D-AMP): SCHEMATIC DIAGRAM - 15 ~ 16

TO MAIN(MICON) CIRCUIT (7/10)

| | | | | |
|---|---|---|---|---|
| 1/10 | 2/10 | 3/10 | 4/10 | 5/10 |
| 6/10 | 7/10 | 8/10 | 9/10 | 10/10 |

SA-AKX74 MAIN(MICON) CIRCUIT

Nota:
Para el valor y clave de cada componente referirse a; "Lista de partes Eléctricas" a partir de la página 134.

SCHEMATIC DIAGRAM - 7

# B MAIN(MICON) CIRCUIT

: +B SIGNAL LINE
: -B SIGNAL LINE
: CD AUDIO INPUT SIGNAL LINE
: AUX/TUNER/MUSIC PORT/MIC AUDIO INPUT SIGNAL LINE
: AUDIO OUTPUT SIGNAL LINE
: AM SIGNAL LINE
: FM SIGNAL LINE
: USB SIGNAL LINE

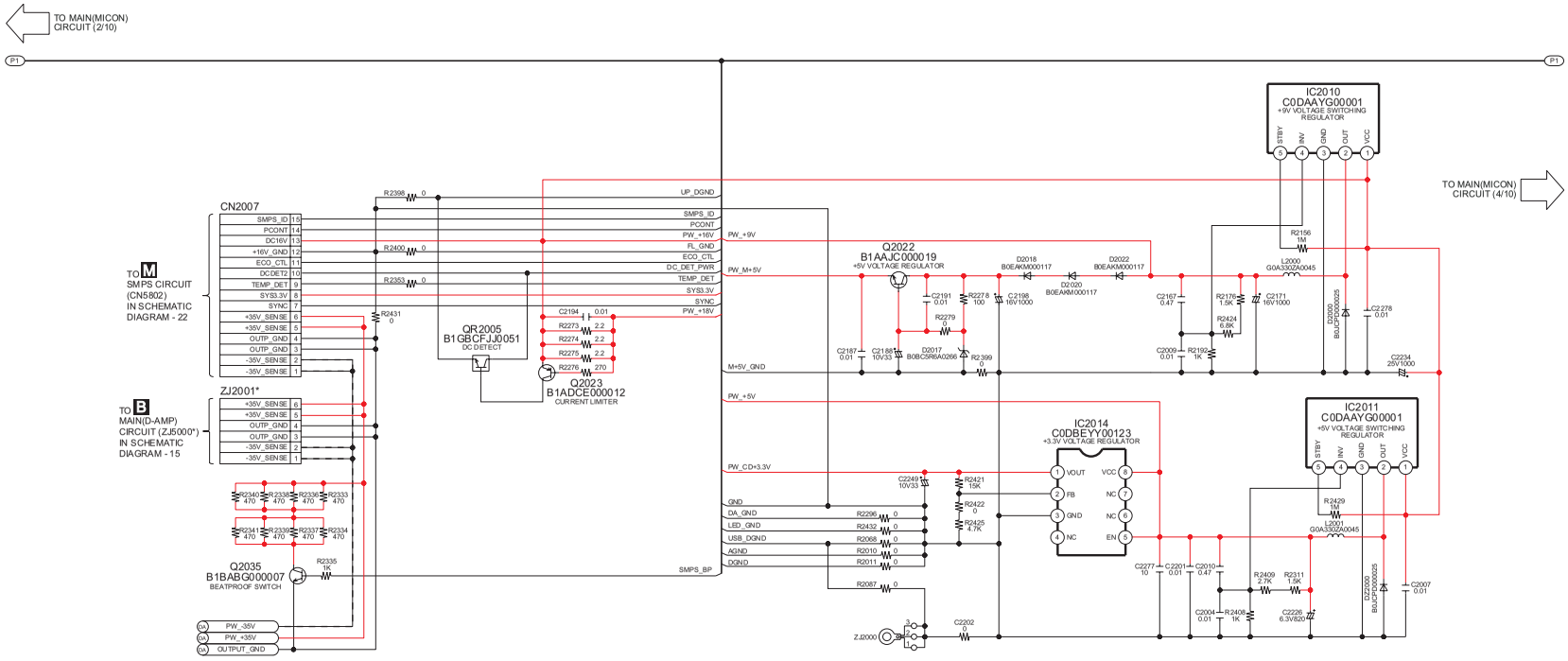


TO MAIN(MICON) CIRCUIT (8/10)

MI: MAIN(MICON): SCHEMATIC DIAGRAM - 5 ~ 14
DA: MAIN(D-AMP): SCHEMATIC DIAGRAM - 15 ~ 16

NOTE: " * " REF IS FOR INDICATION ONLY

| | | | | |
|---|---|---|---|---|
| 1/10 | 2/10 | 3/10 | 4/10 | 5/10 |
| 6/10 | 7/10 | 8/10 | 9/10 | 10/10 |

SA-AKX74 MAIN(MICON) CIRCUIT

Nota:
Para el valor y clave de cada componente referirse a; "Lista de partes Eléctricas" a partir de la página 134.

SCHEMATIC DIAGRAM - 8

# B MAIN(MICON) CIRCUIT

: +B SIGNAL LINE
: -B SIGNAL LINE
: CD AUDIO INPUT SIGNAL LINE
: AUX/TUNER/MUSIC PORT/MIC AUDIO INPUT SIGNAL LINE
: AUDIO OUTPUT SIGNAL LINE
: AM SIGNAL LINE
: FM SIGNAL LINE
: USB SIGNAL LINE

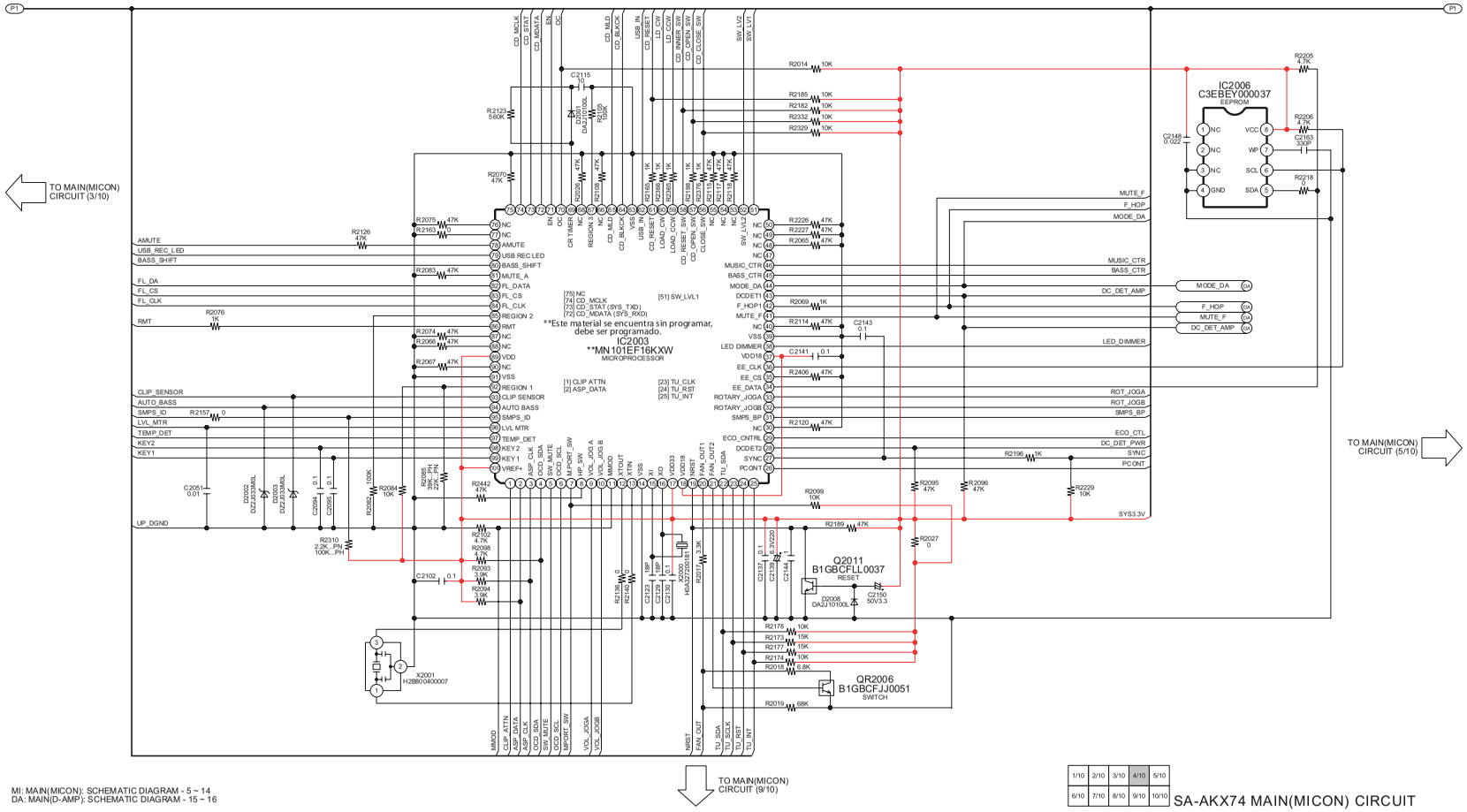


MI: MAIN(MICON): SCHEMATIC DIAGRAM - 5 ~ 14
DA: MAIN(D-AMP): SCHEMATIC DIAGRAM - 15 ~ 16

Nota:
Para el valor y clave de cada componente referirse a; "Lista de partes Eléctricas" a partir de la página 134.

| | | | | |
|---|---|---|---|---|
| 1/10 | 2/10 | 3/10 | 4/10 | 5/10 |
| 6/10 | 7/10 | 8/10 | 9/10 | 10/10 |

SA-AKX74 MAIN(MICON) CIRCUIT

SCHEMATIC DIAGRAM - 9

# B MAIN(MICON) CIRCUIT

: +B SIGNAL LINE
: -B SIGNAL LINE
: CD AUDIO INPUT SIGNAL LINE
: AUX/TUNER/MUSIC PORT/MIC AUDIO INPUT SIGNAL LINE
: AUDIO OUTPUT SIGNAL LINE
: AM SIGNAL LINE
: FM SIGNAL LINE
: USB SIGNAL LINE

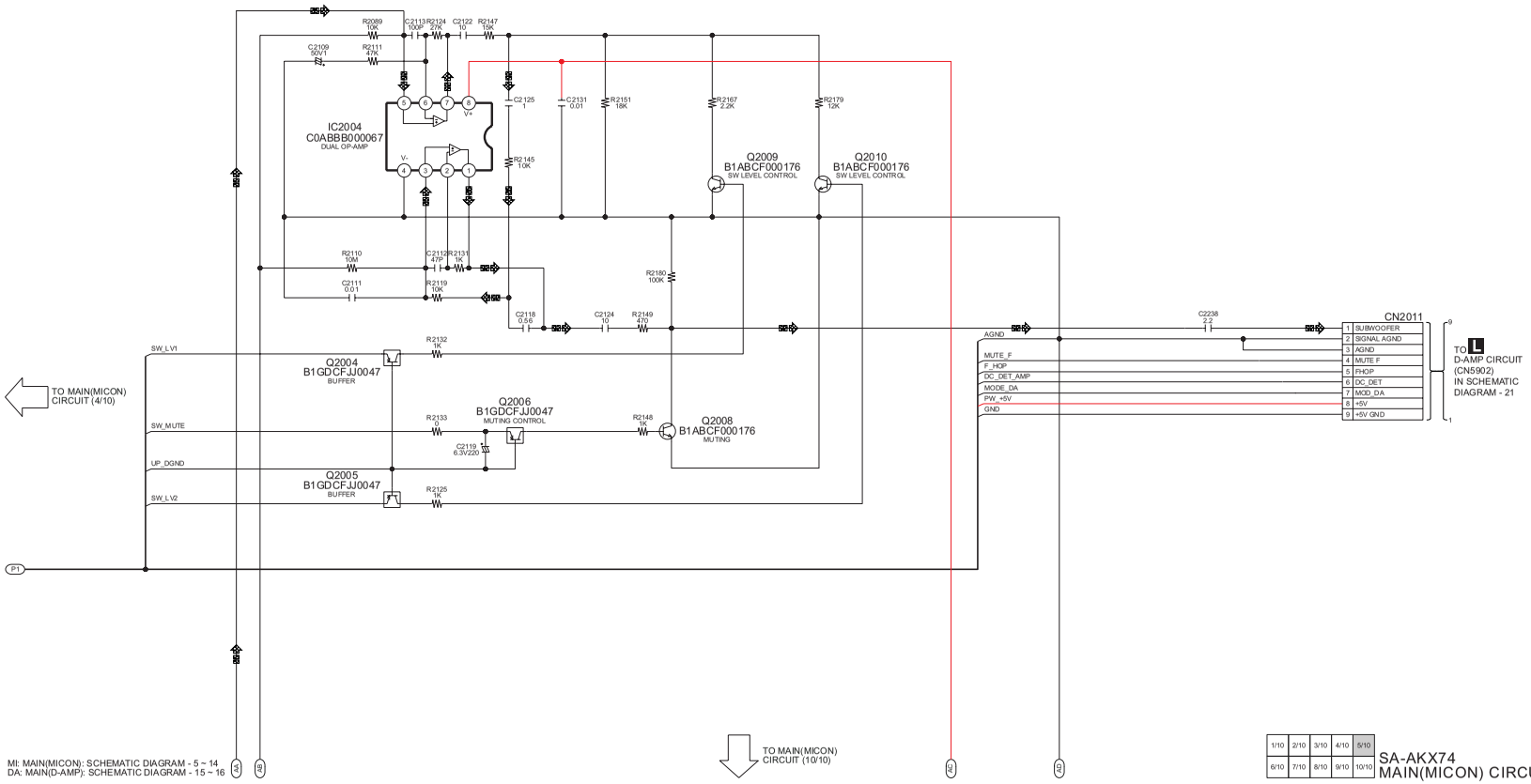


MI: MAIN(MICON): SCHEMATIC DIAGRAM - 5 ~ 14
DA: MAIN(D-AMP): SCHEMATIC DIAGRAM - 15 ~ 16

| | | | | |
|---|---|---|---|---|
| 1/10 | 2/10 | 3/10 | 4/10 | 5/10 |
| 6/10 | 7/10 | 8/10 | 9/10 | 10/10 |

SA-AKX74
MAIN(MICON) CIRCUIT

Nota:
Para el valor y clave de cada componente referirse a; "Lista de partes Eléctricas" a partir de la página 134.

SCHEMATIC DIAGRAM - 10

# B MAIN(MICON) CIRCUIT

: +B SIGNAL LINE
: -B SIGNAL LINE
: CD AUDIO INPUT SIGNAL LINE
: AUX/TUNER/MUSIC PORT/MIC AUDIO INPUT SIGNAL LINE
: AUDIO OUTPUT SIGNAL LINE
: AM SIGNAL LINE
: FM SIGNAL LINE
: USB SIGNAL LINE

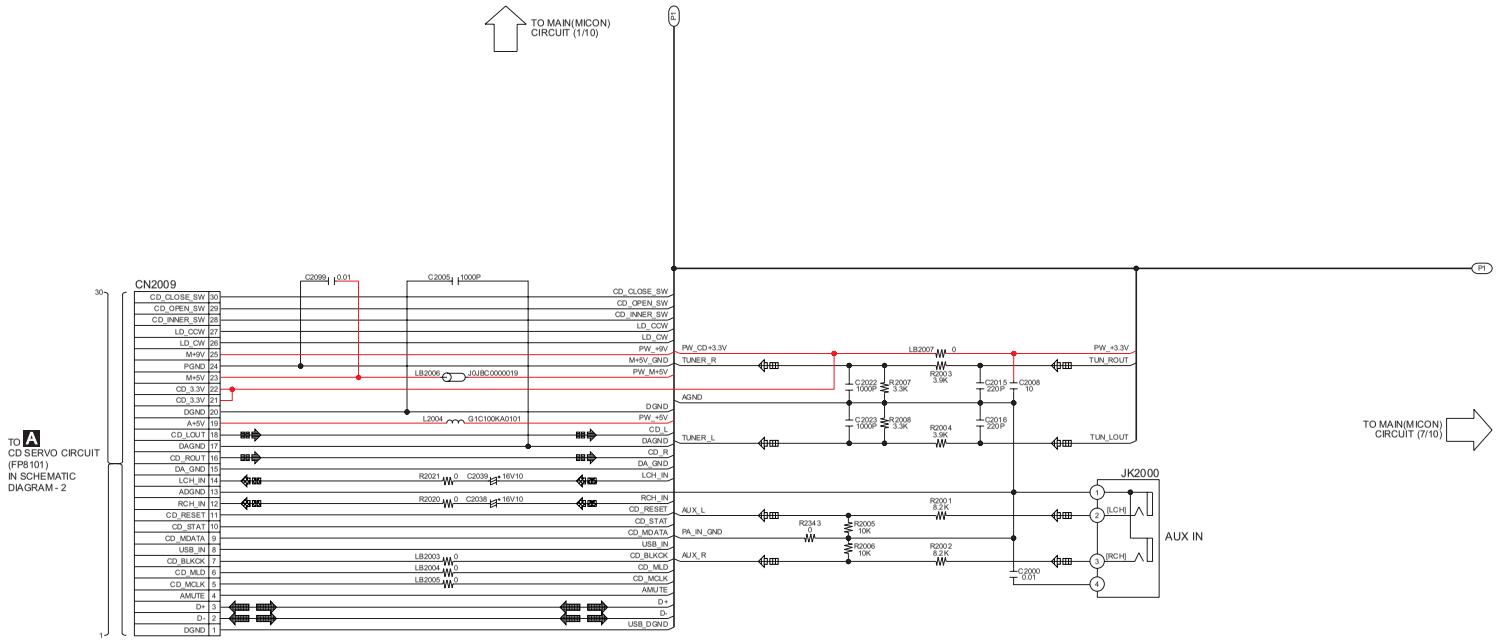


MI: MAIN(MICON): SCHEMATIC DIAGRAM - 5 ~ 14
DA: MAIN(D-AMP): SCHEMATIC DIAGRAM - 15 ~ 16

Nota:
Para el valor y clave de cada componente referirse a; "Lista de partes Eléctricas" a partir de la página 134.

| | | | | |
|---|---|---|---|---|
| 1/10 | 2/10 | 3/10 | 4/10 | 5/10 |
| 6/10 | 7/10 | 8/10 | 9/10 | 10/10 |

SA-AKX74 MAIN(MICON) CIRCUIT

SCHEMATIC DIAGRAM - 11

# B MAIN(MICON) CIRCUIT

: +B SIGNAL LINE
: -B SIGNAL LINE
: CD AUDIO INPUT SIGNAL LINE
: AUX/TUNER/MUSIC PORT/MIC AUDIO INPUT SIGNAL LINE
: AUDIO OUTPUT SIGNAL LINE
: AM SIGNAL LINE
: FM SIGNAL LINE
: USB SIGNAL LINE

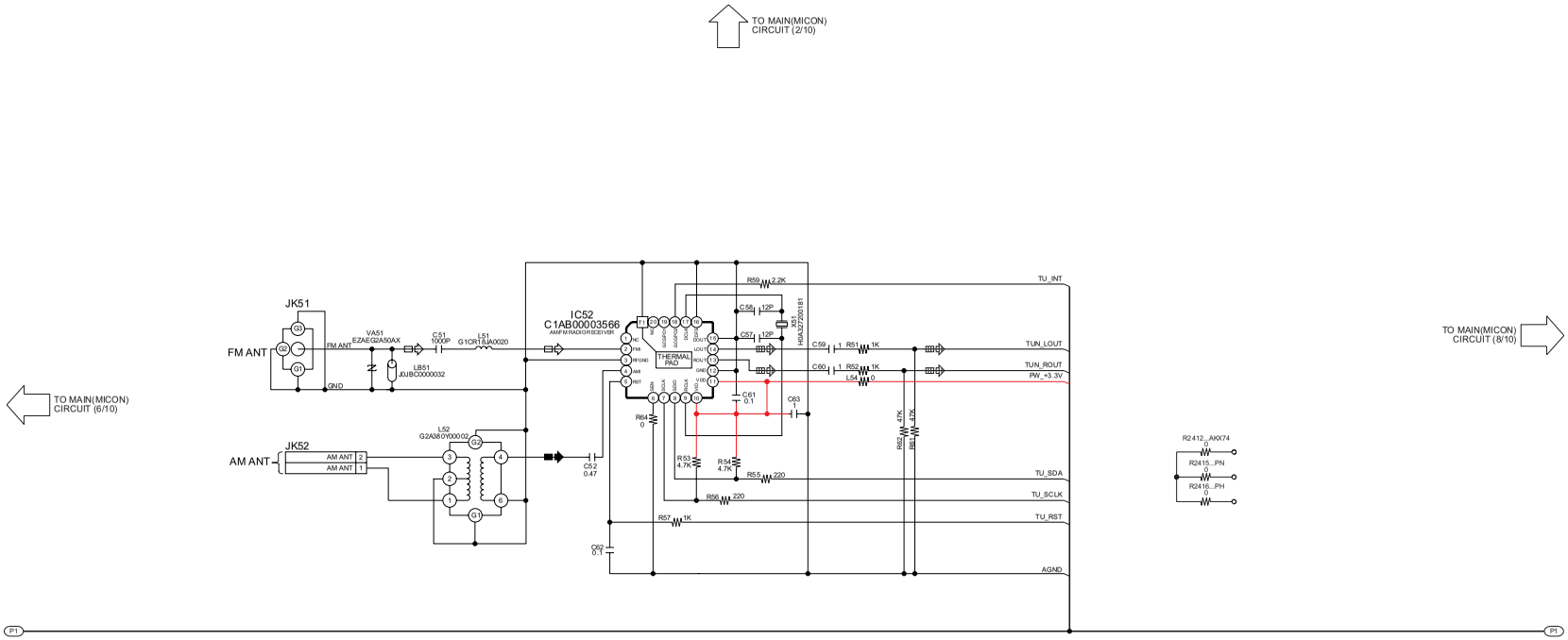


MI: MAIN(MICON): SCHEMATIC DIAGRAM - 5 ~ 14
DA: MAIN(D-AMP): SCHEMATIC DIAGRAM - 15 ~ 16

Nota:
Para el valor y clave de cada componente referirse a; "Lista de partes Eléctricas" a partir de la página 134.

| | | | | |
|---|---|---|---|---|
| 1/10 | 2/10 | 3/10 | 4/10 | 5/10 |
| 6/10 | 7/10 | 8/10 | 9/10 | 10/10 |

SA-AKX74 MAIN(MICON) CIRCUIT

15 | 16 | 17 | 18 | 19 | 20 | 21 | 22 | 23 | 24 | 25 | 26 | 27 | 28

SCHEMATIC DIAGRAM - 12

# B MAIN(MICON) CIRCUIT

: +B SIGNAL LINE
: -B SIGNAL LINE
: CD AUDIO INPUT SIGNAL LINE
: AUX/TUNER/MUSIC PORT/MIC AUDIO INPUT SIGNAL LINE
: AUDIO OUTPUT SIGNAL LINE
: AM SIGNAL LINE
: FM SIGNAL LINE
: USB SIGNAL LINE

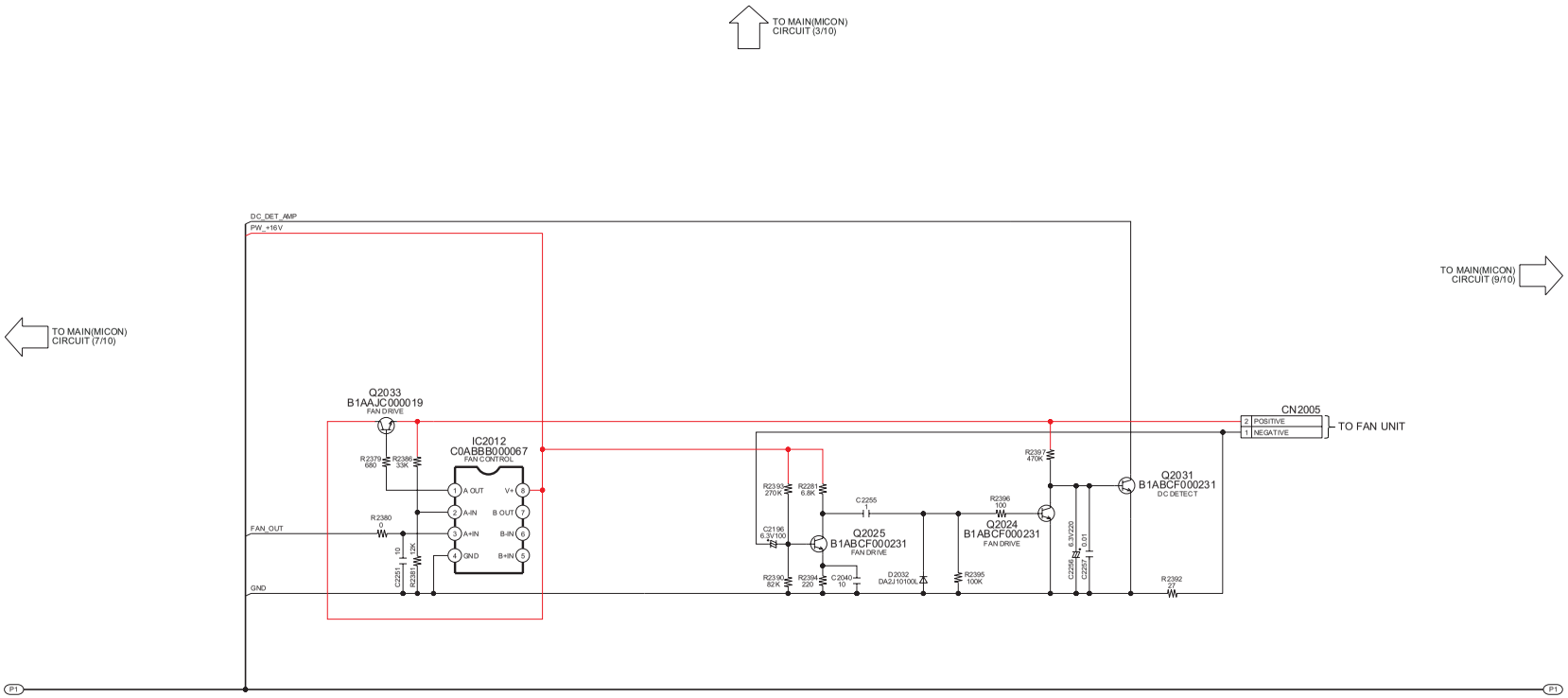


MI: MAIN(MICON): SCHEMATIC DIAGRAM - 5 ~ 14
DA: MAIN(D-AMP): SCHEMATIC DIAGRAM - 15 ~ 16

Nota:
Para el valor y clave de cada componente referirse a; "Lista de partes Eléctricas" a partir de la página 134.

| | | | | |
|---|---|---|---|---|
| 1/10 | 2/10 | 3/10 | 4/10 | 5/10 |
| 6/10 | 7/10 | 8/10 | 9/10 | 10/10 |

SA-AKX74 MAIN(MICON) CIRCUIT

29 | 30 | 31 | 32 | 33 | 34 | 35 | 36 | 37 | 38 | 39 | 40 | 41 | 42

SCHEMATIC DIAGRAM - 13

# B MAIN(MICON) CIRCUIT

: +B SIGNAL LINE
: -B SIGNAL LINE
: CD AUDIO INPUT SIGNAL LINE
: AUX/TUNER/MUSIC PORT/MIC AUDIO INPUT SIGNAL LINE
: AUDIO OUTPUT SIGNAL LINE
: AM SIGNAL LINE
: FM SIGNAL LINE
: USB SIGNAL LINE

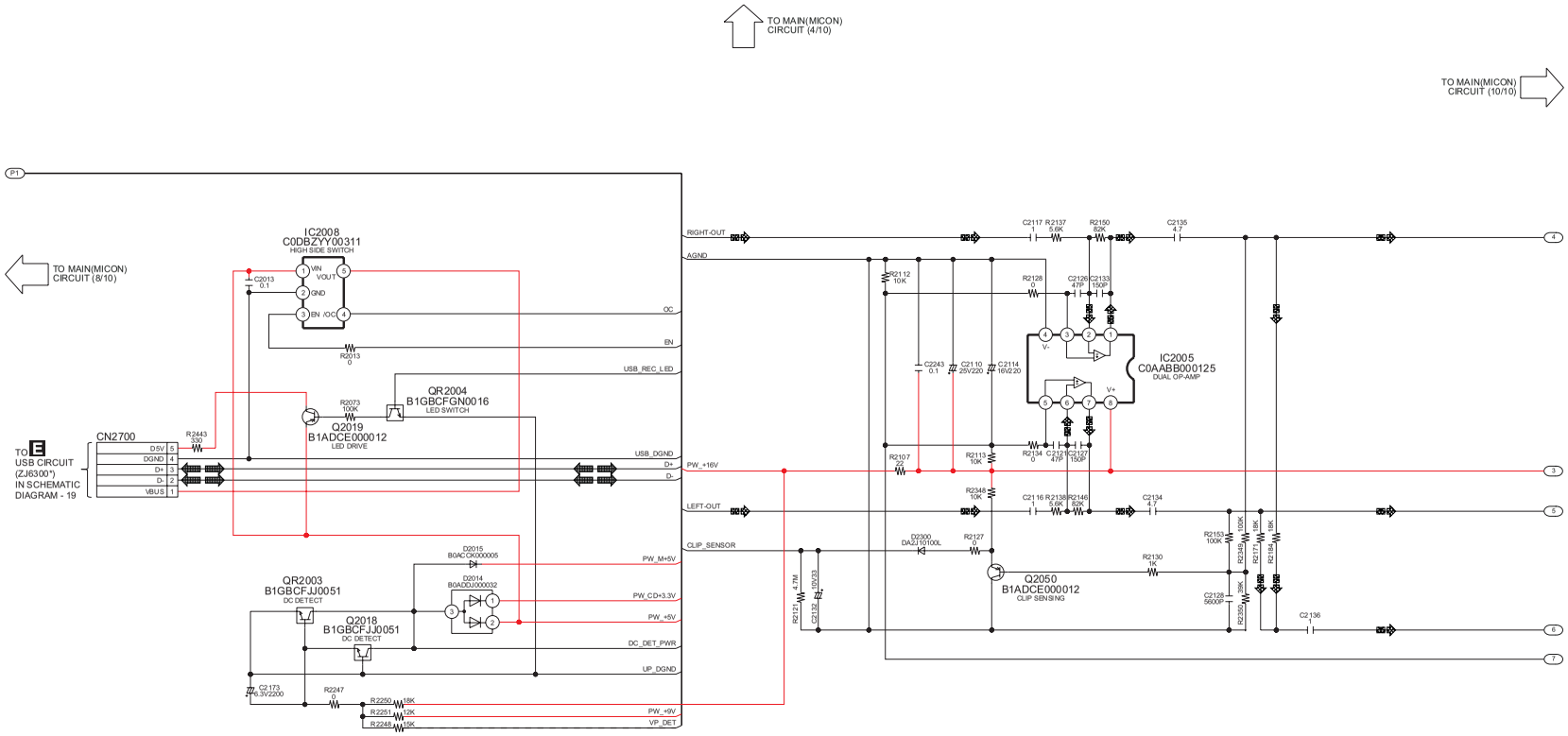


MI: MAIN(MICON): SCHEMATIC DIAGRAM - 5 ~ 14
DA: MAIN(D-AMP): SCHEMATIC DIAGRAM - 15 ~ 16

Nota:
Para el valor y clave de cada componente referirse a; "Lista de partes Eléctricas" a partir de la página 134.

| | | | | |
|---|---|---|---|---|
| 1/10 | 2/10 | 3/10 | 4/10 | 5/10 |
| 6/10 | 7/10 | 8/10 | 9/10 | 10/10 |

SA-AKX74 MAIN(MICON) CIRCUIT

43 | 44 | 45 | 46 | 47 | 48 | 49 | 50 | 51 | 52 | 53 | 54 | 55 | 56

SCHEMATIC DIAGRAM - 14

# B MAIN(MICON) CIRCUIT

—— : +B SIGNAL LINE
—— : -B SIGNAL LINE
: CD AUDIO INPUT SIGNAL LINE
: AUX/TUNER/MUSIC PORT/MIC AUDIO INPUT SIGNAL LINE
: AUDIO OUTPUT SIGNAL LINE
: AM SIGNAL LINE
: FM SIGNAL LINE
: USB SIGNAL LINE

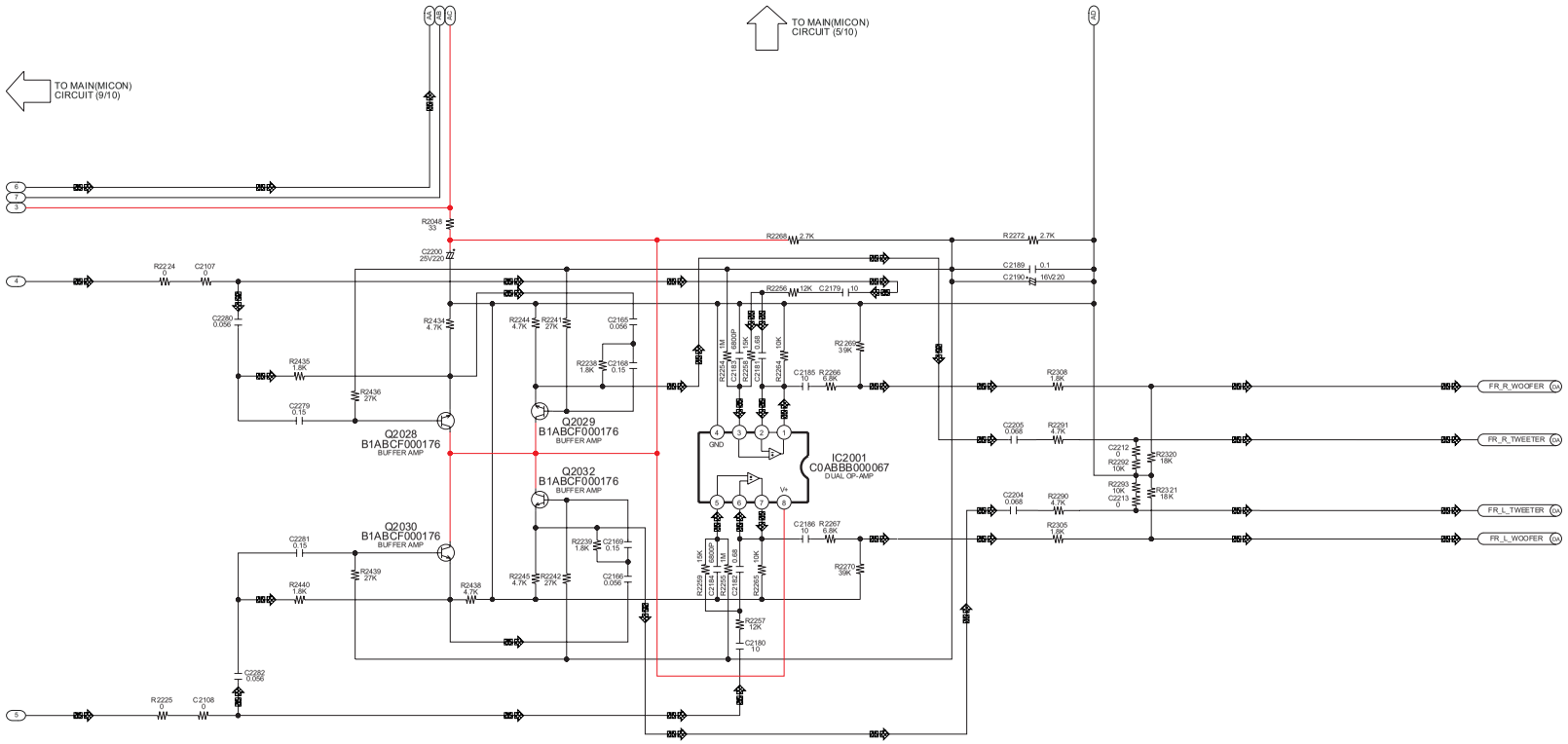


MI: MAIN(MICON): SCHEMATIC DIAGRAM - 5 ~ 14
DA: MAIN(D-AMP): SCHEMATIC DIAGRAM - 15 ~ 16

| | | | | |
|---|---|---|---|---|
| 1/10 | 2/10 | 3/10 | 4/10 | 5/10 |
| 6/10 | 7/10 | 8/10 | 9/10 | 10/10 |

SA-AKX74 MAIN(MICON) CIRCUIT

Nota:
Para el valor y clave de cada componente referirse a; "Lista de partes Eléctricas" a partir de la página 134.

## 16.4. Main(D-Amp) Circuit

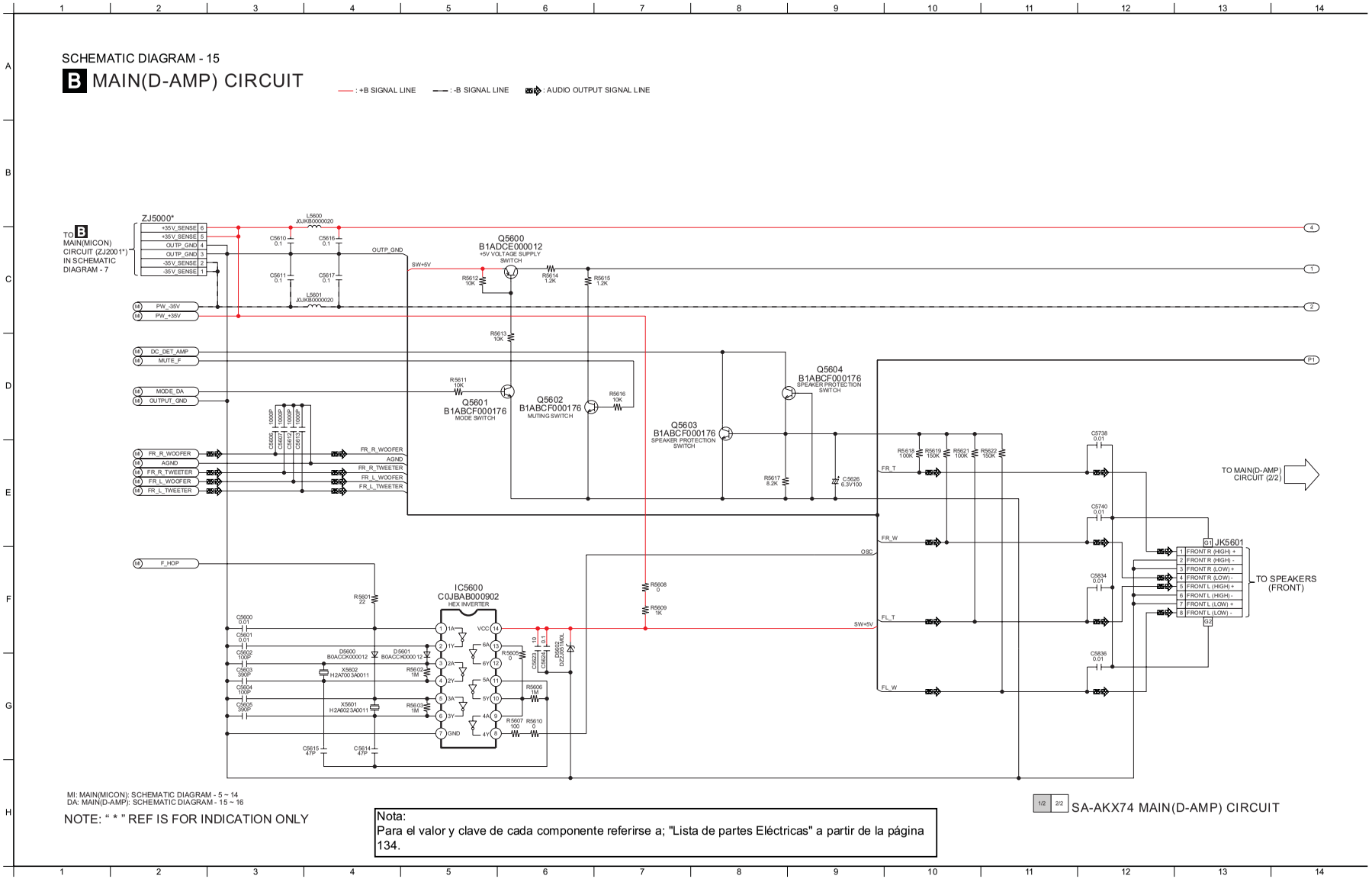


Nota:
Para el valor y clave de cada componente referirse a; "Lista de partes Eléctricas" a partir de la página 134.

SCHEMATIC DIAGRAM - 16

# B MAIN(D-AMP) CIRCUIT

—— : +B SIGNAL LINE  —·— : -B SIGNAL LINE  ▶▶▶ : AUDIO OUTPUT SIGNAL LINE

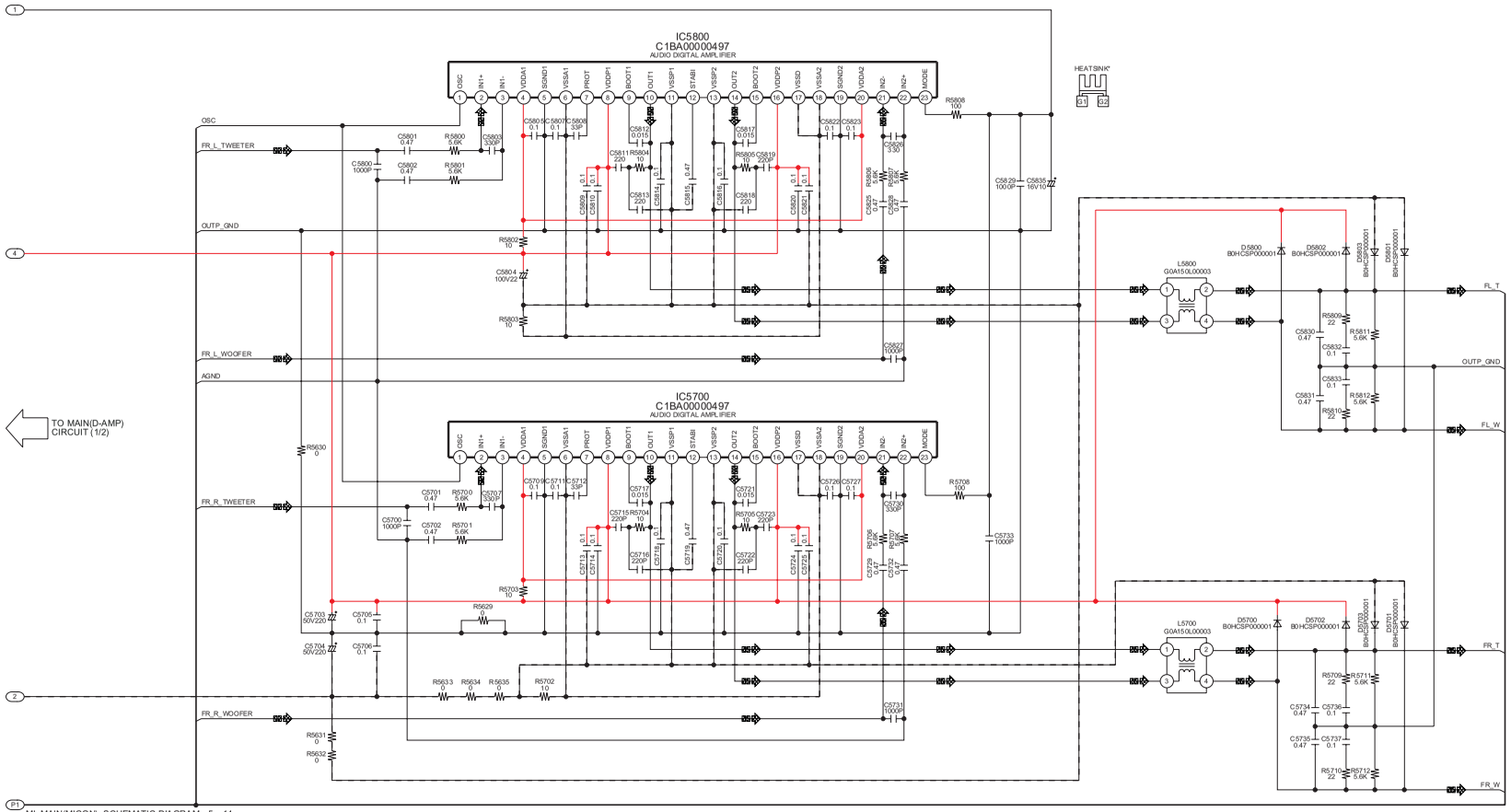


MI: MAIN(MICON): SCHEMATIC DIAGRAM - 5 ~ 14
DA: MAIN(D-AMP): SCHEMATIC DIAGRAM - 15 ~ 16

NOTE: " * " REF IS FOR INDICATION ONLY

Nota:
Para el valor y clave de cada componente referirse a; "Lista de partes Eléctricas" a partir de la página 134.

1/2 2/2 SA-AKX74 MAIN(D-AMP) CIRCUIT

## 16.5. Panel Circuit

SCHEMATIC DIAGRAM - 17

**C** PANEL CIRCUIT

: +B SIGNAL LINE  : -B SIGNAL LINE  : MUSIC PORT/MIC AUDIO INPUT SIGNAL LINE  : AUDIO OUTPUT SIGNAL LINE

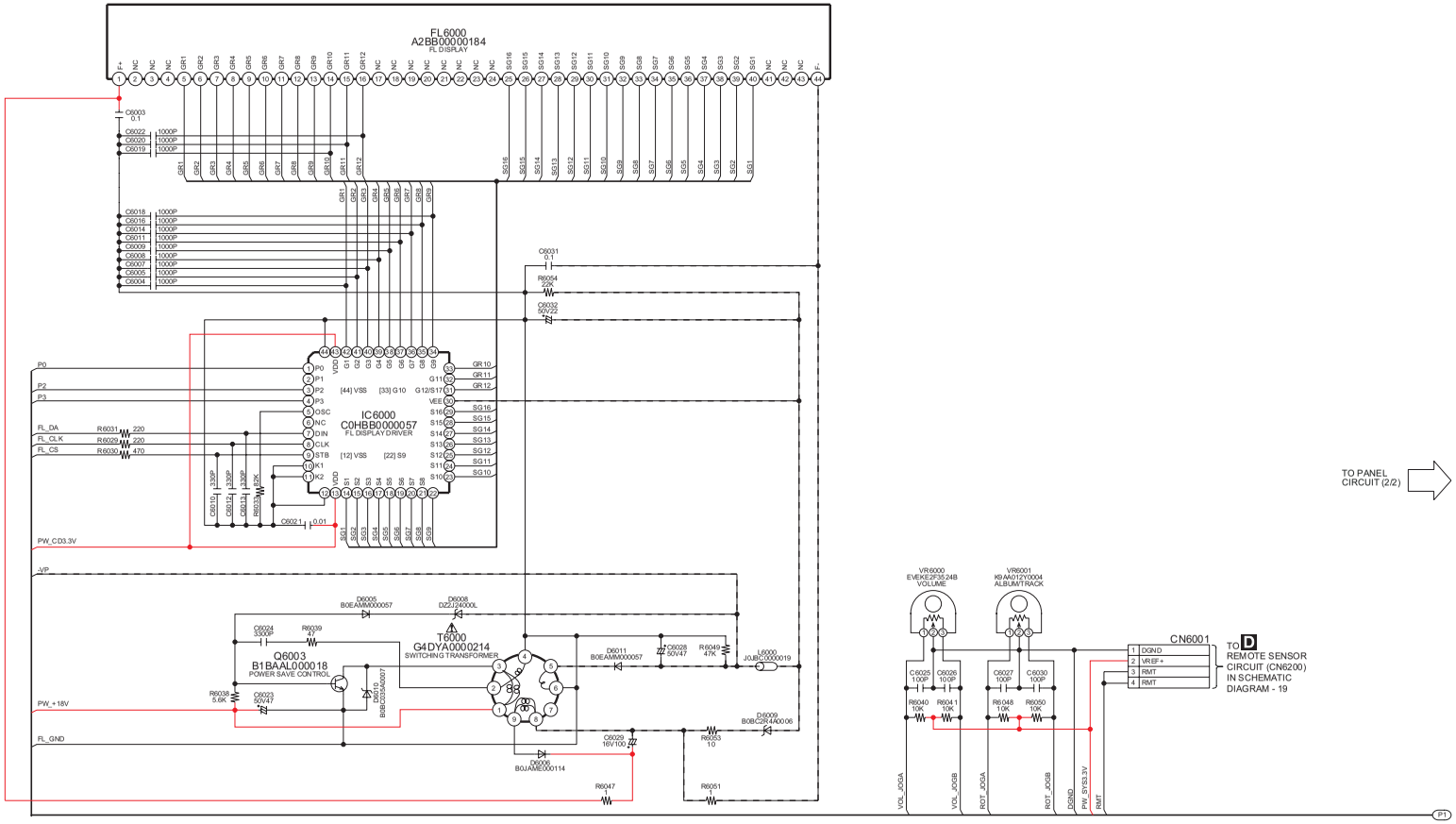


1/2 2/2 SA-AKX74 PANEL CIRCUIT

Nota:
Para el valor y clave de cada componente referirse a; "Lista de partes Eléctricas" a partir de la página 134.

SCHEMATIC DIAGRAM - 18

# C PANEL CIRCUIT

—— : +B SIGNAL LINE  —·— : -B SIGNAL LINE  : MUSIC PORT/MIC AUDIO INPUT SIGNAL LINE  : AUDIO OUTPUT SIGNAL LINE

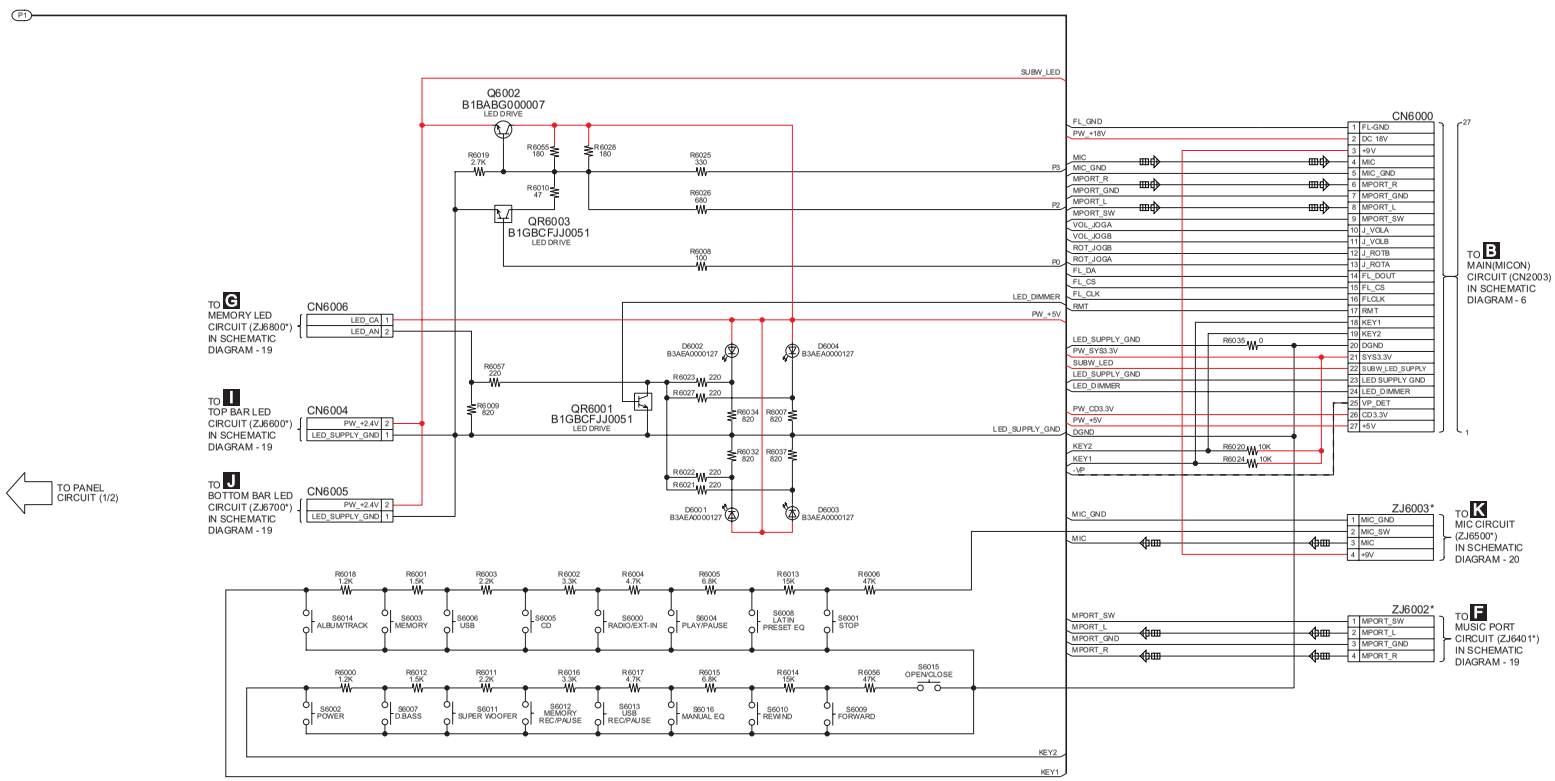


NOTE: " * " REF IS FOR INDICATION ONLY

Nota:
Para el valor y clave de cada componente referirse a; "Lista de partes Eléctricas" a partir de la página 134.

1/2 2/2 SA-AKX74 PANEL CIRCUIT

## 16.6. Remote Sensor, USB, Music Port , Memory LED, Top Bar LED and Bottom Bar LED Circuit

SCHEMATIC DIAGRAM - 19

### D REMOTE SENSOR CIRCUIT

—— : +B SIGNAL LINE

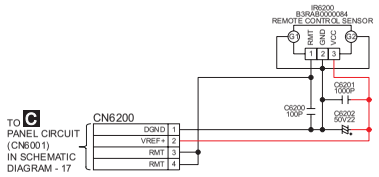


### E USB CIRCUIT

—— : +B SIGNAL LINE ▭ : USB SIGNAL LINE

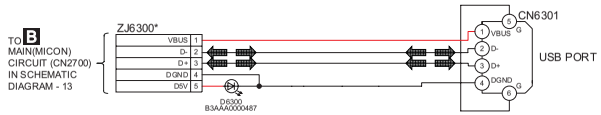


### F MUSIC PORT CIRCUIT

▭ : MUSIC PORT AUDIO INPUT SIGNAL LINE ▭ : AUDIO OUTPUT SIGNAL LINE

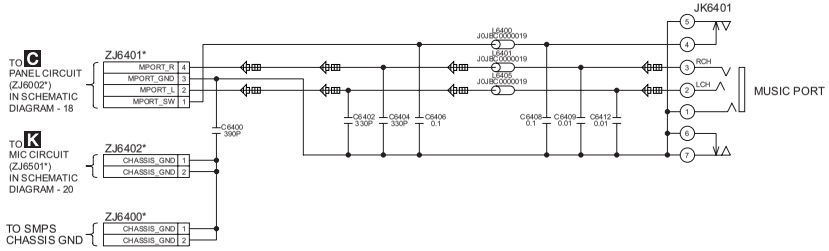


### G MEMORY LED CIRCUIT

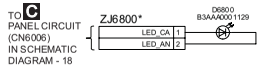


### I TOP BAR LED CIRCUIT

—— : +B SIGNAL LINE

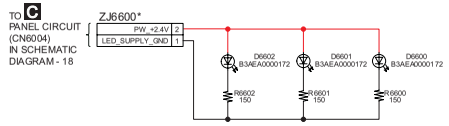


### J BOTTOM BAR LED CIRCUIT

—— : +B SIGNAL LINE

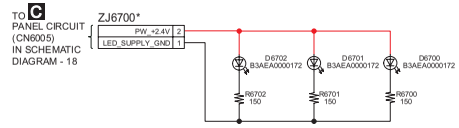


NOTE: “ * ” REF IS FOR INDICATION ONLY

Nota:
Para el valor y clave de cada componente referirse a; "Lista de partes Eléctricas" a partir de la página 134.

SA-AKX74 REMOTE SENSOR / USB / MUSIC PORT / MEMORY LED / TOP BAR LED / BOTTOM BAR LED CIRCUIT

## 16.7. CD Interface, Mic

SCHEMATIC DIAGRAM - 20

### H CD INTERFACE CIRCUIT

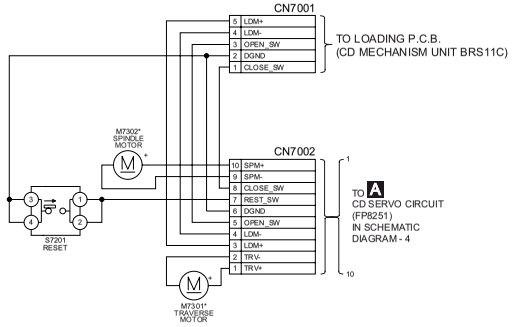


### K MIC CIRCUIT

: +B SIGNAL LINE  : MIC AUDIO INPUT SIGNAL LINE

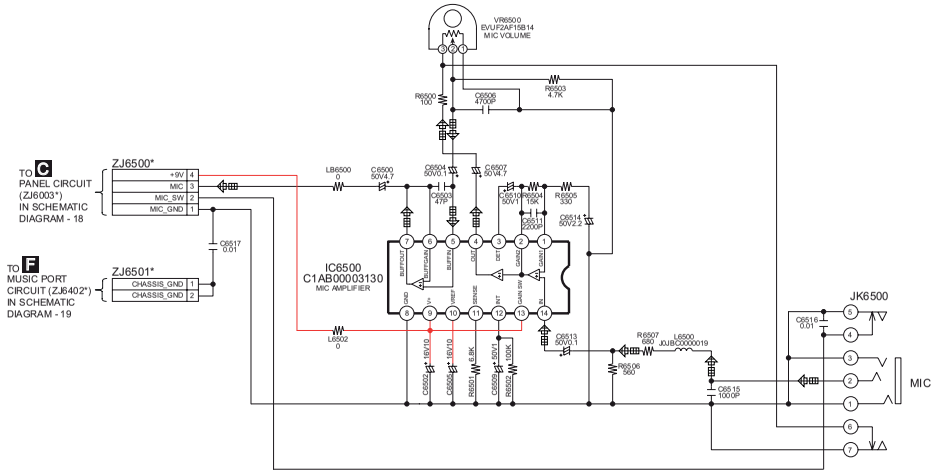


NOTE: " * " REF IS FOR INDICATION ONLY

Nota:
Para el valor y clave de cada componente referirse a; "Lista de partes Eléctricas" a partir de la página 134.

SA-AKX74 CD INTERFACE / MIC

## 16.8. D-Amp Circuit

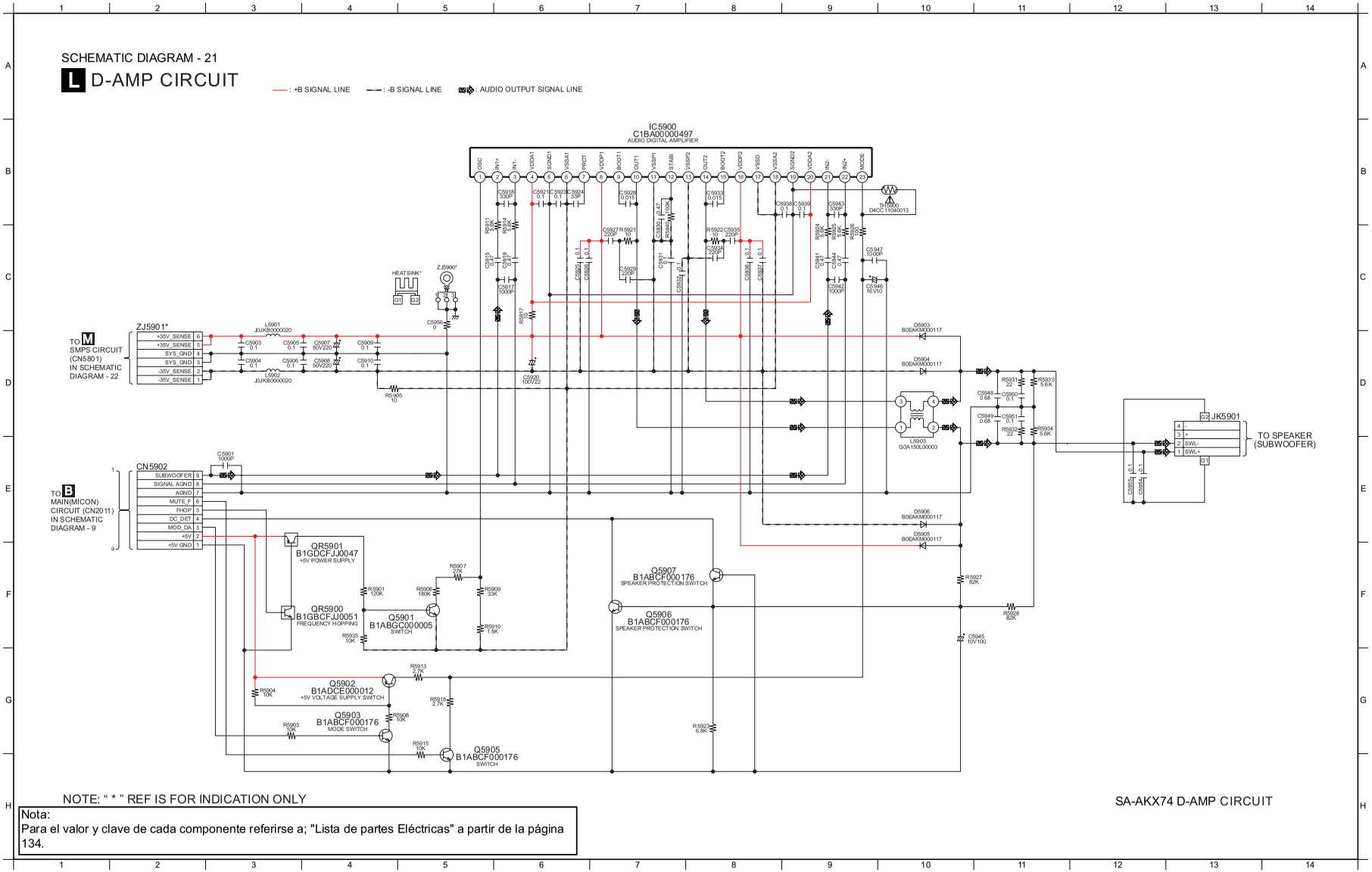


Nota:
Para el valor y clave de cada componente referirse a; "Lista de partes Eléctricas" a partir de la página 134.

## 16.9. SMPS Circuit

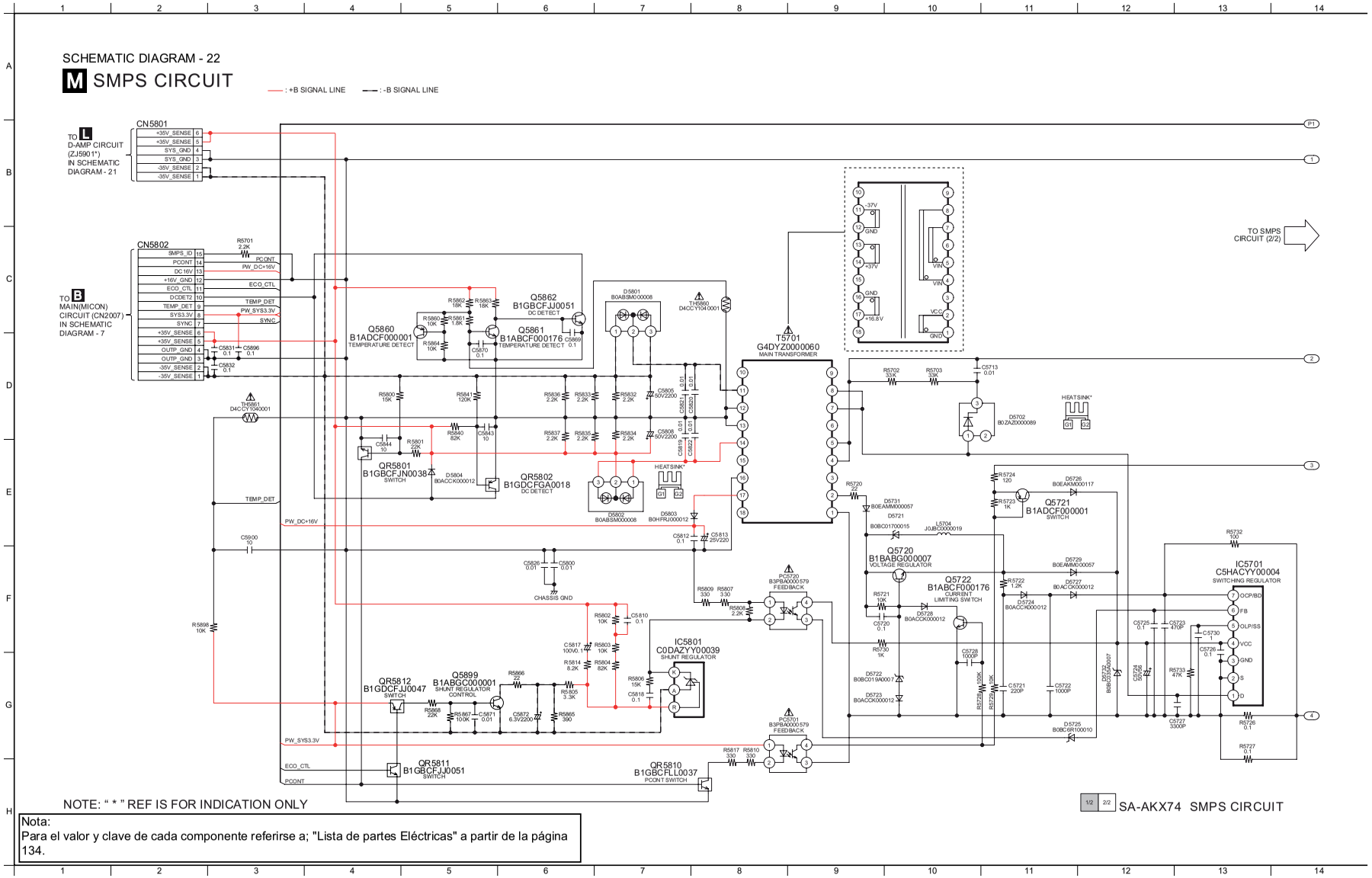


Nota:
Para el valor y clave de cada componente referirse a; "Lista de partes Eléctricas" a partir de la página 134.

SCHEMATIC DIAGRAM - 23

# M SMPS CIRCUIT

—— : +B SIGNAL LINE  —·— : -B SIGNAL LINE

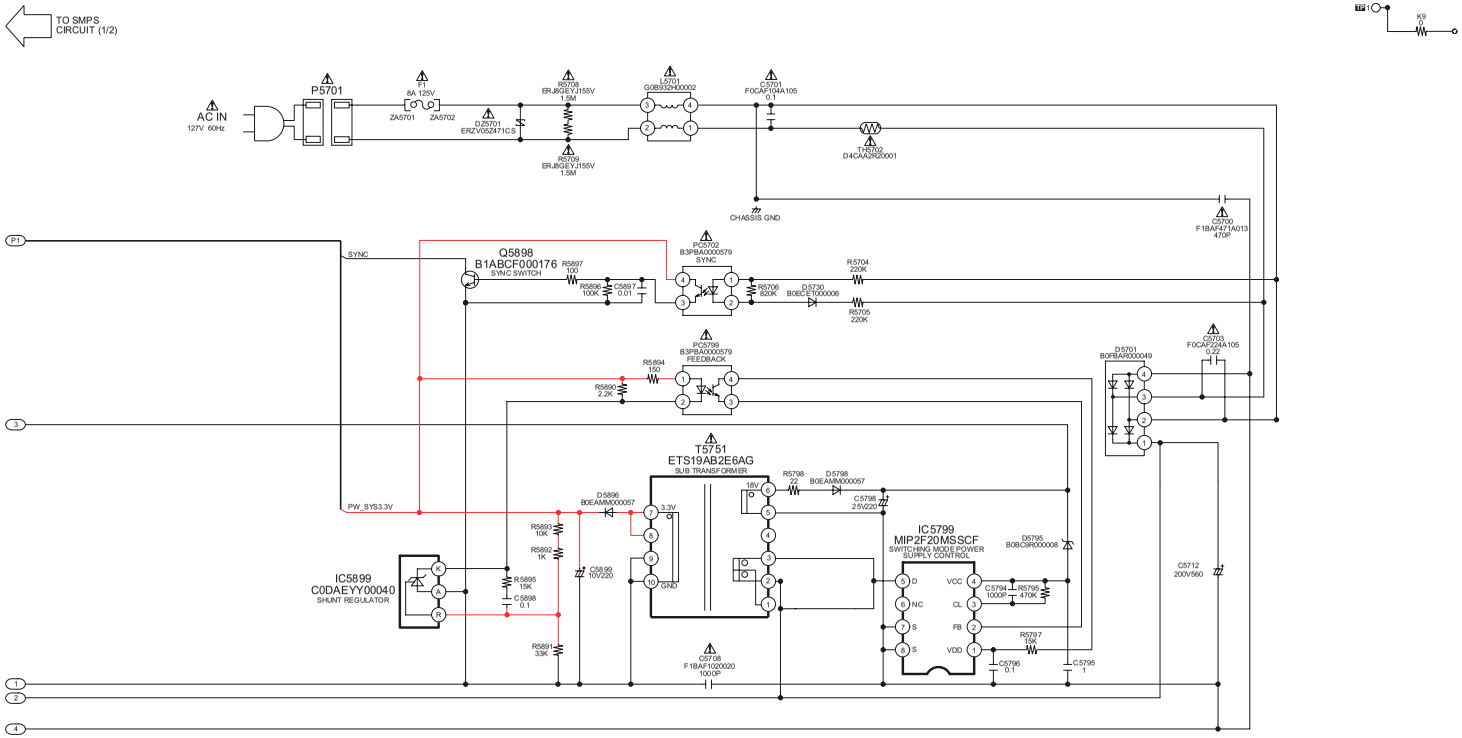


NOTE: “ * ” REF IS FOR INDICATION ONLY

Nota:
Para el valor y clave de cada componente referirse a; "Lista de partes Eléctricas" a partir de la página 134.

1/2 2/2 SA-AKX74 SMPS CIRCUIT

# 17 Printed Circuit Board

## 17.1. CD Servo P.C.B.

**A** CD SERVO P.C.B. (REP4749A)

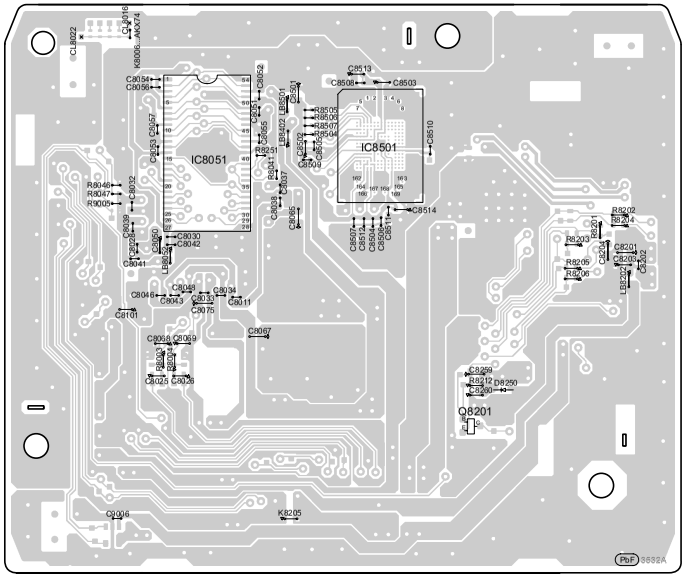


(SIDE A)

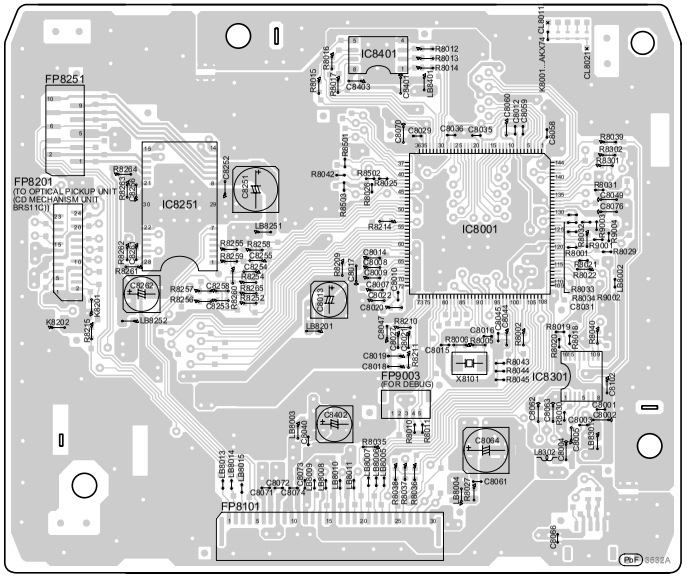


(SIDE B)

Nota:
Para el valor y clave de cada componente referirse a; "Lista de partes Eléctricas" a partir de la página 134.

SA-AKX74
CD SERVO P.C.B.

## 17.2. Main P.C.B. (Side A)

**B** MAIN P.C.B. (RD-DAK102-PX)

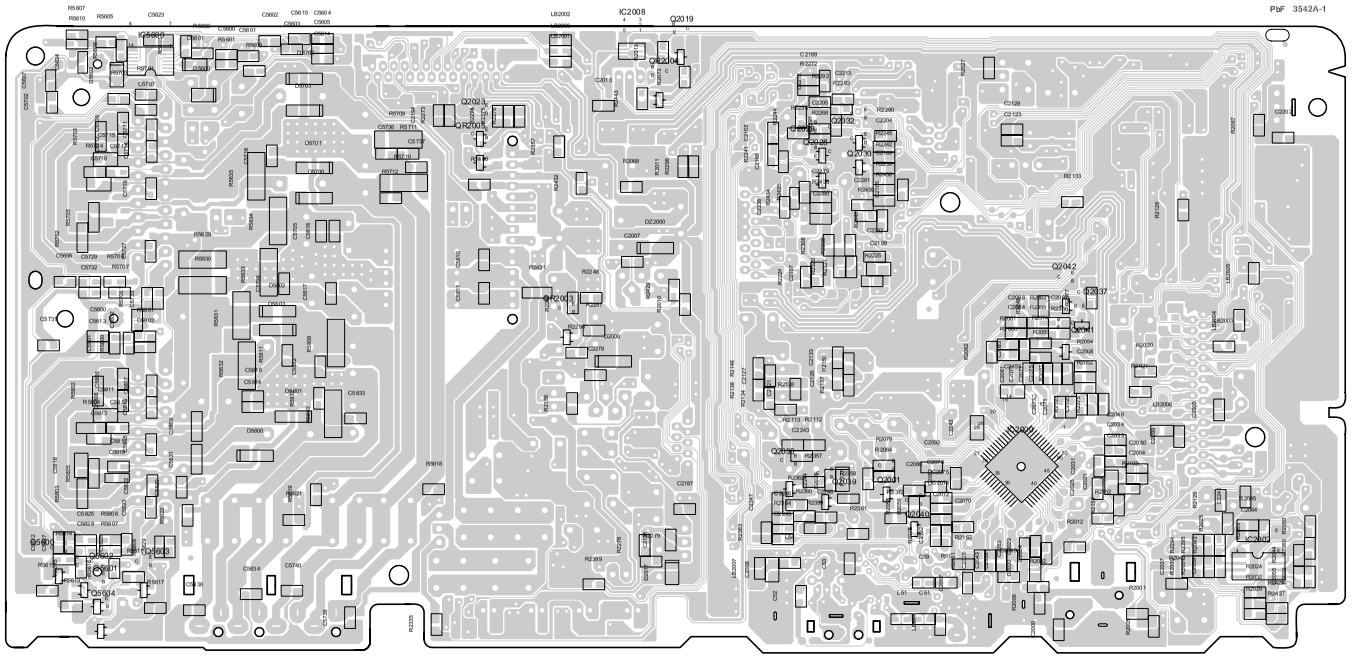


(SIDE A)

Nota:
Para el valor y clave de cada componente referirse a; "Lista de partes Eléctricas" a partir de la página 134.

SA-AKX74
MAIN P.C.B.

## 17.3. Main P.C.B. (Side B)

**B** MAIN P.C.B. (RD-DAK102-PX)

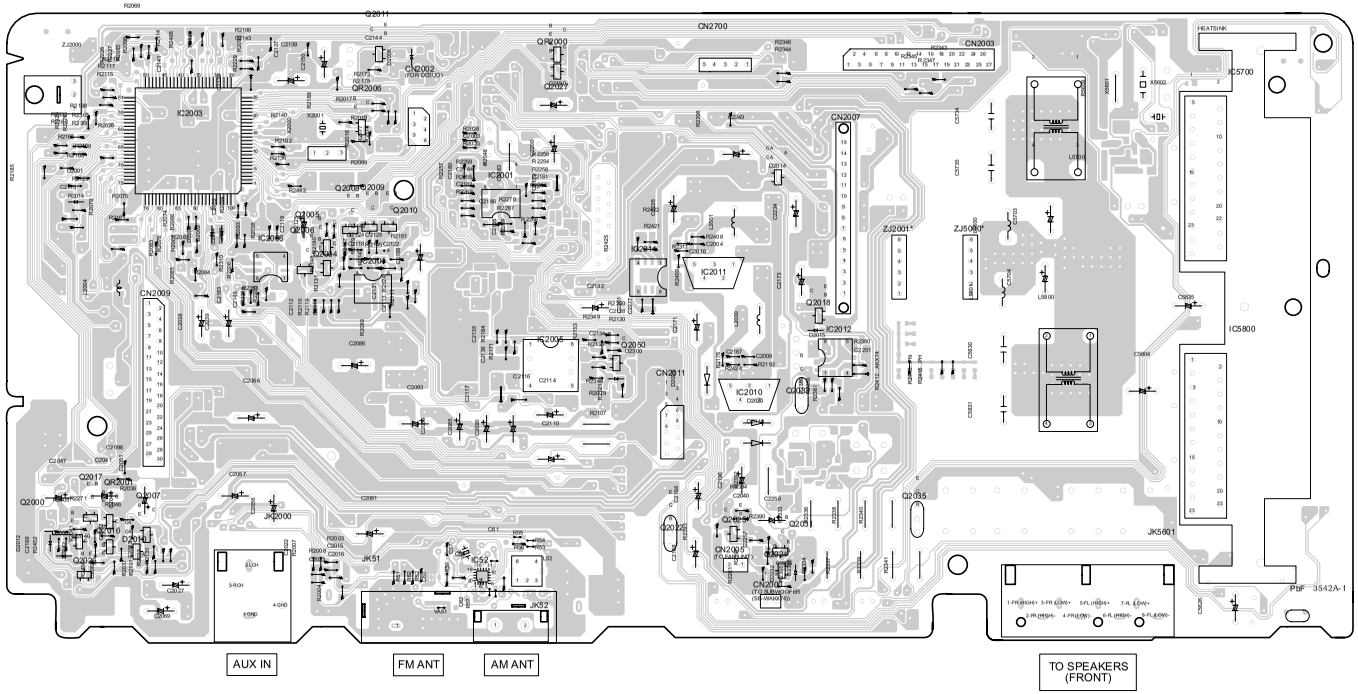


(SIDE B)

NOTE: " * " REF IS FOR INDICATION ONLY.

Nota:
Para el valor y clave de cada componente referirse a; "Lista de partes Eléctricas" a partir de la página 134.

SA-AKX74
MAIN P.C.B.

**COMPONENTES DE PISTA MAIN/DAMP/TUNER PSG**

| Ref. No. | Parts No. | Parts Name |
|---|---|---|
| | RJB3542A-2 | PRINTED CIRCUIT BOARD (MAIN/DAMP/TUNER) |
| C51 | F1H1H102A219 | Surface mounting multilayer ceramic capacitors , rectangular type (1608 type) |
| C52 | F1H1A474A107 | SURFACE MOUNTING MULTILAYER CERAMIC CAPACITORS , RECTANGULAR TYPE (1608 TYPE) |
| C57 | F1H1H120A230 | Surface mounting multilayer ceramic capacitors , rectangular type (1608 type) |
| C58 | F1H1H120A230 | Surface mounting multilayer ceramic capacitors , rectangular type (1608 type) |
| C59 | F1H1A105A025 | SURFACE MOUNTING MULTILAYER CERAMIC CAPACITORS , RECTANGULAR TYPE (1608 TYPE) |
| C60 | F1H1A105A025 | SURFACE MOUNTING MULTILAYER CERAMIC CAPACITORS , RECTANGULAR TYPE (1608 TYPE) |
| C61 | F1G1C104A077 | SURFACE MOUNTING MULTILAYER CERAMIC CAPACITORS , RECTANGULAR TYPE (1005 TYPE) |
| C62 | F1G1C104A077 | SURFACE MOUNTING MULTILAYER CERAMIC CAPACITORS , RECTANGULAR TYPE (1005 TYPE) |
| C63 | F1H0J105A051 | SURFACE MOUNTING MULTILAYER CERAMIC CAPACITORS , RECTANGULAR TYPE (1608 TYPE) |
| C2000 | F1H1H103A219 | SURFACE MOUNTING MULTILAYER CERAMIC CAPACITORS , RECTANGULAR TYPE (1608 TYPE) |
| C2003 | F1H1H103A219 | SURFACE MOUNTING MULTILAYER CERAMIC CAPACITORS , RECTANGULAR TYPE (1608 TYPE) |
| C2004 | F1H1H103A219 | SURFACE MOUNTING MULTILAYER CERAMIC CAPACITORS , RECTANGULAR TYPE (1608 TYPE) |
| C2005 | F1H1H102A219 | Surface mounting multilayer ceramic capacitors , rectangular type (1608 type) |
| C2007 | F1H1H103A219 | SURFACE MOUNTING MULTILAYER CERAMIC CAPACITORS , RECTANGULAR TYPE (1608 TYPE) |
| C2008 | F1J1A106A043 | SURFACE MOUNTING MULTILAYER CERAMIC CAPACITORS , RECTANGULAR TYPE (2125 TYPE) |
| C2009 | F1H1H103A219 | SURFACE MOUNTING MULTILAYER CERAMIC CAPACITORS , RECTANGULAR TYPE (1608 TYPE) |
| C2010 | F1H1A474A107 | SURFACE MOUNTING MULTILAYER CERAMIC CAPACITORS , RECTANGULAR TYPE (1608 TYPE) |
| C2013 | F1H1H104B047 | SURFACE MOUNTING MULTILAYER CERAMIC CAPACITORS , RECTANGULAR TYPE (1608 TYPE) |
| C2015 | F1H1H2210001 | Surface mounting multilayer ceramic capacitors , rectangular type (1608 type) |
| C2016 | F1H1H2210001 | Surface mounting multilayer ceramic capacitors , rectangular type (1608 type) |
| C2020 | F1J1A106A043 | SURFACE MOUNTING MULTILAYER CERAMIC CAPACITORS , RECTANGULAR TYPE (2125 TYPE) |
| C2021 | F1J1A106A043 | SURFACE MOUNTING MULTILAYER CERAMIC CAPACITORS , RECTANGULAR TYPE (2125 TYPE) |
| C2022 | F1H1H102A219 | Surface mounting multilayer ceramic capacitors , rectangular type (1608 type) |
| C2023 | F1H1H102A219 | Surface mounting multilayer ceramic capacitors , rectangular type (1608 type) |
| C2024 | F1H1H102A219 | Surface mounting multilayer ceramic capacitors , rectangular type (1608 type) |
| C2026 | F1H1H102A219 | Surface mounting multilayer ceramic capacitors , rectangular type (1608 type) |
| C2027 | F2A1C100A207 | Aluminum non-solid electrolytic capacitors , lead type |
| C2028 | F1H0J105A051 | SURFACE MOUNTING MULTILAYER CERAMIC CAPACITORS , RECTANGULAR TYPE (1608 TYPE) |
| C2029 | F1H0J105A051 | SURFACE MOUNTING MULTILAYER CERAMIC CAPACITORS , RECTANGULAR TYPE (1608 TYPE) |
| C2031 | F1H0J105A051 | SURFACE MOUNTING MULTILAYER CERAMIC CAPACITORS , RECTANGULAR TYPE (1608 TYPE) |
| C2032 | F1H0J105A051 | SURFACE MOUNTING MULTILAYER CERAMIC CAPACITORS , RECTANGULAR TYPE (1608 TYPE) |
| C2033 | F1H0J105A051 | SURFACE MOUNTING MULTILAYER CERAMIC CAPACITORS , RECTANGULAR TYPE (1608 TYPE) |
| C2034 | F1H0J105A051 | SURFACE MOUNTING MULTILAYER CERAMIC CAPACITORS , RECTANGULAR TYPE (1608 TYPE) |
| C2037 | F1H1H473A783 | Surface mounting multilayer ceramic capacitors , rectangular type (1608 type) |
| C2038 | F2A1C100A207 | Aluminum non-solid electrolytic capacitors , lead type |
| C2039 | F2A1C100A207 | Aluminum non-solid electrolytic capacitors , lead type |
| C2040 | F1J1A106A043 | SURFACE MOUNTING MULTILAYER CERAMIC CAPACITORS , RECTANGULAR TYPE (2125 TYPE) |
| C2041 | F2A0J101B034 | ALUMINUM NON-SOLID ELECTROLYTIC CAPACITORS , LEAD TYPE |
| C2043 | F1H1H102A219 | Surface mounting multilayer ceramic capacitors , rectangular type (1608 type) |
| C2046 | F1H1H102A219 | Surface mounting multilayer ceramic capacitors , rectangular type (1608 type) |
| C2047 | F2A1H1R0A213 | Aluminum non-solid electrolytic capacitors , lead type |
| C2048 | F2A1H1R0A213 | Aluminum non-solid electrolytic capacitors , lead type |
| C2049 | F1H1H101B052 | SURFACE MOUNTING MULTILAYER CERAMIC CAPACITORS , RECTANGULAR TYPE (1608 TYPE) |
| C2050 | F1H1H101B052 | SURFACE MOUNTING MULTILAYER CERAMIC CAPACITORS , RECTANGULAR TYPE (1608 TYPE) |
| C2051 | F1H1H103A219 | SURFACE MOUNTING MULTILAYER CERAMIC CAPACITORS , RECTANGULAR TYPE (1608 TYPE) |
| C2052 | F1H0J105A051 | SURFACE MOUNTING MULTILAYER CERAMIC CAPACITORS , RECTANGULAR TYPE (1608 TYPE) |
| C2053 | F1H1H102A219 | Surface mounting multilayer ceramic capacitors , rectangular type (1608 type) |
| C2054 | F1H1H102A219 | Surface mounting multilayer ceramic capacitors , rectangular type (1608 type) |
| C2055 | F1H1H470A004 | SURFACE MOUNTING MULTILAYER CERAMIC CAPACITORS , RECTANGULAR TYPE (1608 TYPE) |
| C2056 | F2A1A330B138 | ALUMINUM NON-SOLID ELECTROLYTIC CAPACITORS , LEAD TYPE |
| C2057 | F2A1H4R7A213 | Aluminum non-solid electrolytic capacitors , lead type |
| C2059 | F1H1H470A004 | SURFACE MOUNTING MULTILAYER CERAMIC CAPACITORS , RECTANGULAR TYPE (1608 TYPE) |
| C2060 | F1H1H101B052 | SURFACE MOUNTING MULTILAYER CERAMIC CAPACITORS , RECTANGULAR TYPE (1608 TYPE) |
| C2061 | F2A1H1R0A213 | Aluminum non-solid electrolytic capacitors , lead type |
| C2062 | F1H1A224A061 | SURFACE MOUNTING MULTILAYER CERAMIC CAPACITORS , RECTANGULAR TYPE (1608 TYPE) |
| C2063 | F1H1A225A051 | SURFACE MOUNTING MULTILAYER CERAMIC CAPACITORS , RECTANGULAR TYPE (1608 TYPE) |
| C2064 | F1H1H101B052 | SURFACE MOUNTING MULTILAYER CERAMIC CAPACITORS , RECTANGULAR TYPE (1608 TYPE) |
| C2066 | F2A1H1R0A213 | Aluminum non-solid electrolytic capacitors , lead type |
| C2067 | F1H0J105A051 | SURFACE MOUNTING MULTILAYER CERAMIC CAPACITORS , RECTANGULAR TYPE (1608 TYPE) |
| C2068 | F1H0J105A051 | SURFACE MOUNTING MULTILAYER CERAMIC CAPACITORS , RECTANGULAR TYPE (1608 TYPE) |
| C2069 | F2A1A330B138 | ALUMINUM NON-SOLID ELECTROLYTIC CAPACITORS , LEAD TYPE |
| C2070 | F1H1A474A107 | SURFACE MOUNTING MULTILAYER CERAMIC CAPACITORS , RECTANGULAR TYPE (1608 TYPE) |
| C2071 | F1H1A474A107 | SURFACE MOUNTING MULTILAYER CERAMIC CAPACITORS , RECTANGULAR TYPE (1608 TYPE) |
| C2072 | F1H1H332A013 | Surface mounting multilayer ceramic capacitors , rectangular type (1608 type) |
| C2073 | F1H1H332A013 | Surface mounting multilayer ceramic capacitors , rectangular type (1608 type) |
| C2074 | F1H1H103A219 | SURFACE MOUNTING MULTILAYER CERAMIC CAPACITORS , RECTANGULAR TYPE (1608 TYPE) |
| C2075 | F1H1H103A219 | SURFACE MOUNTING MULTILAYER CERAMIC CAPACITORS , RECTANGULAR TYPE (1608 TYPE) |
| C2076 | F1H1H103A219 | SURFACE MOUNTING MULTILAYER CERAMIC CAPACITORS , RECTANGULAR TYPE (1608 TYPE) |
| C2077 | F1H1H103A219 | SURFACE MOUNTING MULTILAYER CERAMIC CAPACITORS , RECTANGULAR TYPE (1608 TYPE) |
| C2078 | F1H1C183A041 | Surface mounting multilayer ceramic capacitors , rectangular type (1608 type) |
| C2079 | F1H1C183A041 | Surface mounting multilayer ceramic capacitors , rectangular type (1608 type) |
| C2080 | F1H1A474A025 | Surface mounting multilayer ceramic capacitors , rectangular type (1608 type) |

| | | |
|---|---|---|
| C2081 | F1H1A474A025 | Surface mounting multilayer ceramic capacitors , rectangular type (1608 type) |
| C2082 | F1H1H332A013 | Surface mounting multilayer ceramic capacitors , rectangular type (1608 type) |
| C2083 | F1H1H223A219 | SURFACE MOUNTING MULTILAYER CERAMIC CAPACITORS , RECTANGULAR TYPE (1608 TYPE) |
| C2084 | F1H1C823A001 | SURFACE MOUNTING MULTILAYER CERAMIC CAPACITORS , RECTANGULAR TYPE (1608 TYPE) |
| C2085 | F2A1H3R3A213 | Aluminum non-solid electrolytic capacitors , lead type |
| C2086 | F2A1H3R3A213 | Aluminum non-solid electrolytic capacitors , lead type |
| C2087 | F1H0J4750004 | SURFACE MOUNTING MULTILAYER CERAMIC CAPACITORS , RECTANGULAR TYPE (1608 TYPE) |
| C2088 | F1H1C823A001 | SURFACE MOUNTING MULTILAYER CERAMIC CAPACITORS , RECTANGULAR TYPE (1608 TYPE) |
| C2089 | F2A1H3R3A213 | Aluminum non-solid electrolytic capacitors , lead type |
| C2090 | F2A1H1R0A213 | Aluminum non-solid electrolytic capacitors , lead type |
| C2092 | F1H1C683A087 | Surface mounting multilayer ceramic capacitors , rectangular type (1608 type) |
| C2093 | F2A1C102A019 | Aluminum non-solid electrolytic capacitors , lead type |
| C2094 | F1H1C104A042 | Surface mounting multilayer ceramic capacitors , rectangular type (1608 type) |
| C2095 | F1H1C104A042 | Surface mounting multilayer ceramic capacitors , rectangular type (1608 type) |
| C2096 | F1H1H152A219 | Surface mounting multilayer ceramic capacitors , rectangular type (1608 type) |
| C2099 | F1H1H103A219 | SURFACE MOUNTING MULTILAYER CERAMIC CAPACITORS , RECTANGULAR TYPE (1608 TYPE) |
| C2102 | F1H1C104A042 | Surface mounting multilayer ceramic capacitors , rectangular type (1608 type) |
| C2107 | D0GBR00JA008 | SURFACE MOUNTING FIXED METAL GLAZE FILM ( THICK FILM ) RESISTORS , RECTANGULAR TYPE |
| C2108 | D0GBR00JA008 | SURFACE MOUNTING FIXED METAL GLAZE FILM ( THICK FILM ) RESISTORS , RECTANGULAR TYPE |
| C2109 | F2A1H1R0A213 | Aluminum non-solid electrolytic capacitors , lead type |
| C2110 | F2A1E2210093 | ALUMINUM NON-SOLID ELECTROLYTIC CAPACITORS , LEAD TYPE |
| C2111 | F1H1H103A219 | SURFACE MOUNTING MULTILAYER CERAMIC CAPACITORS , RECTANGULAR TYPE (1608 TYPE) |
| C2112 | F1H1H470A004 | SURFACE MOUNTING MULTILAYER CERAMIC CAPACITORS , RECTANGULAR TYPE (1608 TYPE) |
| C2113 | F1H1H101B052 | SURFACE MOUNTING MULTILAYER CERAMIC CAPACITORS , RECTANGULAR TYPE (1608 TYPE) |
| C2114 | F2A1C221B456 | ALUMINUM NON-SOLID ELECTROLYTIC CAPACITORS , LEAD TYPE |
| C2115 | F1J1A106A043 | SURFACE MOUNTING MULTILAYER CERAMIC CAPACITORS , RECTANGULAR TYPE (2125 TYPE) |
| C2116 | F1H0J105A051 | SURFACE MOUNTING MULTILAYER CERAMIC CAPACITORS , RECTANGULAR TYPE (1608 TYPE) |
| C2117 | F1H0J105A051 | SURFACE MOUNTING MULTILAYER CERAMIC CAPACITORS , RECTANGULAR TYPE (1608 TYPE) |
| C2118 | F1H1A5640001 | SURFACE MOUNTING MULTILAYER CERAMIC CAPACITORS , RECTANGULAR TYPE (1608 TYPE) |
| C2119 | F2A0J221B034 | ALUMINUM NON-SOLID ELECTROLYTIC CAPACITORS , LEAD TYPE |
| C2121 | F1H1H470A004 | SURFACE MOUNTING MULTILAYER CERAMIC CAPACITORS , RECTANGULAR TYPE (1608 TYPE) |
| C2122 | F1J1A106A043 | SURFACE MOUNTING MULTILAYER CERAMIC CAPACITORS , RECTANGULAR TYPE (2125 TYPE) |
| C2123 | F1H1H180A230 | Surface mounting multilayer ceramic capacitors , rectangular type (1608 type) |
| C2124 | F1J1A106A043 | SURFACE MOUNTING MULTILAYER CERAMIC CAPACITORS , RECTANGULAR TYPE (2125 TYPE) |
| C2125 | F1H0J105A051 | SURFACE MOUNTING MULTILAYER CERAMIC CAPACITORS , RECTANGULAR TYPE (1608 TYPE) |
| C2126 | F1H1H470A004 | SURFACE MOUNTING MULTILAYER CERAMIC CAPACITORS , RECTANGULAR TYPE (1608 TYPE) |
| C2127 | F1H1H151A004 | Surface mounting multilayer ceramic capacitors , rectangular type (1608 type) |
| C2128 | F1H1H562A219 | Surface mounting multilayer ceramic capacitors , rectangular type (1608 type) |
| C2129 | F1H1H180A230 | Surface mounting multilayer ceramic capacitors , rectangular type (1608 type) |
| C2130 | F1J1H104A459 | SURFACE MOUNTING MULTILAYER CERAMIC CAPACITORS , RECTANGULAR TYPE (2125 TYPE) |
| C2131 | F1H1H103A219 | SURFACE MOUNTING MULTILAYER CERAMIC CAPACITORS , RECTANGULAR TYPE (1608 TYPE) |
| C2132 | F2A1A330B138 | ALUMINUM NON-SOLID ELECTROLYTIC CAPACITORS , LEAD TYPE |
| C2133 | F1H1H151A004 | Surface mounting multilayer ceramic capacitors , rectangular type (1608 type) |
| C2134 | F1H0J4750004 | SURFACE MOUNTING MULTILAYER CERAMIC CAPACITORS , RECTANGULAR TYPE (1608 TYPE) |
| C2135 | F1H0J4750004 | SURFACE MOUNTING MULTILAYER CERAMIC CAPACITORS , RECTANGULAR TYPE (1608 TYPE) |
| C2136 | F1H0J105A051 | SURFACE MOUNTING MULTILAYER CERAMIC CAPACITORS , RECTANGULAR TYPE (1608 TYPE) |
| C2137 | F1H1C104A042 | Surface mounting multilayer ceramic capacitors , rectangular type (1608 type) |
| C2139 | F2A0J221B034 | ALUMINUM NON-SOLID ELECTROLYTIC CAPACITORS , LEAD TYPE |
| C2141 | F1H1C104A042 | Surface mounting multilayer ceramic capacitors , rectangular type (1608 type) |
| C2143 | F1H1C104A042 | Surface mounting multilayer ceramic capacitors , rectangular type (1608 type) |
| C2144 | F1H0J105A051 | SURFACE MOUNTING MULTILAYER CERAMIC CAPACITORS , RECTANGULAR TYPE (1608 TYPE) |
| C2148 | F1H1H223A219 | SURFACE MOUNTING MULTILAYER CERAMIC CAPACITORS , RECTANGULAR TYPE (1608 TYPE) |
| C2150 | F2A1H3R3A213 | Aluminum non-solid electrolytic capacitors , lead type |
| C2153 | F1J1A106A043 | SURFACE MOUNTING MULTILAYER CERAMIC CAPACITORS , RECTANGULAR TYPE (2125 TYPE) |
| C2163 | F1H1H331A013 | SURFACE MOUNTING MULTILAYER CERAMIC CAPACITORS , RECTANGULAR TYPE (1608 TYPE) |
| C2165 | F1H1H563A748 | SURFACE MOUNTING MULTILAYER CERAMIC CAPACITORS , RECTANGULAR TYPE (1608 TYPE) |
| C2166 | F1H1H563A748 | SURFACE MOUNTING MULTILAYER CERAMIC CAPACITORS , RECTANGULAR TYPE (1608 TYPE) |
| C2167 | F1H1A474A107 | SURFACE MOUNTING MULTILAYER CERAMIC CAPACITORS , RECTANGULAR TYPE (1608 TYPE) |
| C2168 | F1H1A154A025 | Surface mounting multilayer ceramic capacitors , rectangular type (1608 type) |
| C2169 | F1H1A154A025 | Surface mounting multilayer ceramic capacitors , rectangular type (1608 type) |
| C2171 | F2A1C102A019 | Aluminum non-solid electrolytic capacitors , lead type |
| C2173 | F2A0J2220055 | ALUMINUM NON-SOLID ELECTROLYTIC CAPACITORS , LEAD TYPE |
| C2179 | F1J1A106A043 | SURFACE MOUNTING MULTILAYER CERAMIC CAPACITORS , RECTANGULAR TYPE (2125 TYPE) |
| C2180 | F1J1A106A043 | SURFACE MOUNTING MULTILAYER CERAMIC CAPACITORS , RECTANGULAR TYPE (2125 TYPE) |
| C2181 | F1H1A684A025 | Surface mounting multilayer ceramic capacitors , rectangular type (1608 type) |
| C2182 | F1H1A684A025 | Surface mounting multilayer ceramic capacitors , rectangular type (1608 type) |
| C2183 | F1H1H682A219 | Surface mounting multilayer ceramic capacitors , rectangular type (1608 type) |
| C2184 | F1H1H682A219 | Surface mounting multilayer ceramic capacitors , rectangular type (1608 type) |
| C2185 | F1J1A106A043 | SURFACE MOUNTING MULTILAYER CERAMIC CAPACITORS , RECTANGULAR TYPE (2125 TYPE) |
| C2186 | F1J1A106A043 | SURFACE MOUNTING MULTILAYER CERAMIC CAPACITORS , RECTANGULAR TYPE (2125 TYPE) |
| C2187 | F1H1H103A219 | SURFACE MOUNTING MULTILAYER CERAMIC CAPACITORS , RECTANGULAR TYPE (1608 TYPE) |
| C2188 | F2A1A330B138 | ALUMINUM NON-SOLID ELECTROLYTIC CAPACITORS , LEAD TYPE |
| C2189 | F1H1C104A042 | Surface mounting multilayer ceramic capacitors , rectangular type (1608 type) |
| C2190 | F2A1C221B456 | ALUMINUM NON-SOLID ELECTROLYTIC CAPACITORS , LEAD TYPE |
| C2191 | F1H1H103A219 | SURFACE MOUNTING MULTILAYER CERAMIC CAPACITORS , RECTANGULAR TYPE (1608 TYPE) |

| | | |
|---|---|---|
| C2192 | F1H0J105A051 | SURFACE MOUNTING MULTILAYER CERAMIC CAPACITORS , RECTANGULAR TYPE (1608 TYPE) |
| C2193 | F1H0J105A051 | SURFACE MOUNTING MULTILAYER CERAMIC CAPACITORS , RECTANGULAR TYPE (1608 TYPE) |
| C2194 | F1H1H103A219 | SURFACE MOUNTING MULTILAYER CERAMIC CAPACITORS , RECTANGULAR TYPE (1608 TYPE) |
| C2196 | F2A0J101A181 | ALUMINUM NON-SOLID ELECTROLYTIC CAPACITORS , LEAD TYPE |
| C2198 | F2A1C102A019 | Aluminum non-solid electrolytic capacitors , lead type |
| C2199 | F1H1A225A051 | SURFACE MOUNTING MULTILAYER CERAMIC CAPACITORS , RECTANGULAR TYPE (1608 TYPE) |
| C2200 | F2A1E2210093 | ALUMINUM NON-SOLID ELECTROLYTIC CAPACITORS , LEAD TYPE |
| C2201 | F1H1H103A219 | SURFACE MOUNTING MULTILAYER CERAMIC CAPACITORS , RECTANGULAR TYPE (1608 TYPE) |
| C2202 | D0GBR00JA008 | SURFACE MOUNTING FIXED METAL GLAZE FILM ( THICK FILM ) RESISTORS , RECTANGULAR TYPE |
| C2204 | F1H1C683A087 | Surface mounting multilayer ceramic capacitors , rectangular type (1608 type) |
| C2205 | F1H1C683A087 | Surface mounting multilayer ceramic capacitors , rectangular type (1608 type) |
| C2212 | D0GBR00JA008 | SURFACE MOUNTING FIXED METAL GLAZE FILM ( THICK FILM ) RESISTORS , RECTANGULAR TYPE |
| C2213 | D0GBR00JA008 | SURFACE MOUNTING FIXED METAL GLAZE FILM ( THICK FILM ) RESISTORS , RECTANGULAR TYPE |
| C2226 | F2A0J821B044 | ALUMINUM NON-SOLID ELECTROLYTIC CAPACITORS , LEAD TYPE |
| C2234 | F2A1E102B396 | ALUMINUM NON-SOLID ELECTROLYTIC CAPACITORS , LEAD TYPE |
| C2238 | F1H0J2250008 | SURFACE MOUNTING MULTILAYER CERAMIC CAPACITORS , RECTANGULAR TYPE (1608 TYPE) |
| C2241 | F1H1C104A042 | Surface mounting multilayer ceramic capacitors , rectangular type (1608 type) |
| C2242 | F1J1E1040003 | SURFACE MOUNTING MULTILAYER CERAMIC CAPACITORS , RECTANGULAR TYPE (2125 TYPE) |
| C2243 | F1H1C104A042 | Surface mounting multilayer ceramic capacitors , rectangular type (1608 type) |
| C2244 | F1H0J105A051 | SURFACE MOUNTING MULTILAYER CERAMIC CAPACITORS , RECTANGULAR TYPE (1608 TYPE) |
| C2245 | F1H0J105A051 | SURFACE MOUNTING MULTILAYER CERAMIC CAPACITORS , RECTANGULAR TYPE (1608 TYPE) |
| C2246 | F1H1C104A042 | Surface mounting multilayer ceramic capacitors , rectangular type (1608 type) |
| C2247 | F1H1C104A042 | Surface mounting multilayer ceramic capacitors , rectangular type (1608 type) |
| C2248 | F1H0J105A051 | SURFACE MOUNTING MULTILAYER CERAMIC CAPACITORS , RECTANGULAR TYPE (1608 TYPE) |
| C2249 | F2A1A330B138 | ALUMINUM NON-SOLID ELECTROLYTIC CAPACITORS , LEAD TYPE |
| C2251 | F1J1A106A043 | SURFACE MOUNTING MULTILAYER CERAMIC CAPACITORS , RECTANGULAR TYPE (2125 TYPE) |
| C2255 | F1H0J105A051 | SURFACE MOUNTING MULTILAYER CERAMIC CAPACITORS , RECTANGULAR TYPE (1608 TYPE) |
| C2256 | F2A0J221B034 | ALUMINUM NON-SOLID ELECTROLYTIC CAPACITORS , LEAD TYPE |
| C2257 | F1H1H103A219 | SURFACE MOUNTING MULTILAYER CERAMIC CAPACITORS , RECTANGULAR TYPE (1608 TYPE) |
| C2277 | F1J1A106A043 | SURFACE MOUNTING MULTILAYER CERAMIC CAPACITORS , RECTANGULAR TYPE (2125 TYPE) |
| C2278 | F1H1H103A219 | SURFACE MOUNTING MULTILAYER CERAMIC CAPACITORS , RECTANGULAR TYPE (1608 TYPE) |
| C2279 | F1H1A154A025 | Surface mounting multilayer ceramic capacitors , rectangular type (1608 type) |
| C2280 | F1H1H563A748 | SURFACE MOUNTING MULTILAYER CERAMIC CAPACITORS , RECTANGULAR TYPE (1608 TYPE) |
| C2281 | F1H1A154A025 | Surface mounting multilayer ceramic capacitors , rectangular type (1608 type) |
| C2282 | F1H1H563A748 | SURFACE MOUNTING MULTILAYER CERAMIC CAPACITORS , RECTANGULAR TYPE (1608 TYPE) |
| C5600 | F1H1H103A219 | SURFACE MOUNTING MULTILAYER CERAMIC CAPACITORS , RECTANGULAR TYPE (1608 TYPE) |
| C5601 | F1H1H103A219 | SURFACE MOUNTING MULTILAYER CERAMIC CAPACITORS , RECTANGULAR TYPE (1608 TYPE) |
| C5602 | F1H1H101B052 | SURFACE MOUNTING MULTILAYER CERAMIC CAPACITORS , RECTANGULAR TYPE (1608 TYPE) |
| C5603 | F1H1H391A013 | SURFACE MOUNTING MULTILAYER CERAMIC CAPACITORS , RECTANGULAR TYPE (1608 TYPE) |
| C5604 | F1H1H101B052 | SURFACE MOUNTING MULTILAYER CERAMIC CAPACITORS , RECTANGULAR TYPE (1608 TYPE) |
| C5605 | F1H1H391A013 | SURFACE MOUNTING MULTILAYER CERAMIC CAPACITORS , RECTANGULAR TYPE (1608 TYPE) |
| C5606 | F1H1H102A219 | Surface mounting multilayer ceramic capacitors , rectangular type (1608 type) |
| C5607 | F1H1H102A219 | Surface mounting multilayer ceramic capacitors , rectangular type (1608 type) |
| C5610 | F1H1H104B047 | SURFACE MOUNTING MULTILAYER CERAMIC CAPACITORS , RECTANGULAR TYPE (1608 TYPE) |
| C5611 | F1H1H104B047 | SURFACE MOUNTING MULTILAYER CERAMIC CAPACITORS , RECTANGULAR TYPE (1608 TYPE) |
| C5612 | F1H1H102A219 | Surface mounting multilayer ceramic capacitors , rectangular type (1608 type) |
| C5613 | F1H1H102A219 | Surface mounting multilayer ceramic capacitors , rectangular type (1608 type) |
| C5614 | F1H1H470A004 | SURFACE MOUNTING MULTILAYER CERAMIC CAPACITORS , RECTANGULAR TYPE (1608 TYPE) |
| C5615 | F1H1H470A004 | SURFACE MOUNTING MULTILAYER CERAMIC CAPACITORS , RECTANGULAR TYPE (1608 TYPE) |
| C5616 | F1H1H104B047 | SURFACE MOUNTING MULTILAYER CERAMIC CAPACITORS , RECTANGULAR TYPE (1608 TYPE) |
| C5617 | F1H1H104B047 | SURFACE MOUNTING MULTILAYER CERAMIC CAPACITORS , RECTANGULAR TYPE (1608 TYPE) |
| C5623 | F1K1C1060001 | SURFACE MOUNTING MULTILAYER CERAMIC CAPACITORS , RECTANGULAR TYPE (3216 TYPE) |
| C5624 | F1H1H104B047 | SURFACE MOUNTING MULTILAYER CERAMIC CAPACITORS , RECTANGULAR TYPE (1608 TYPE) |
| C5626 | F2A0J101A245 | ALUMINUM NON-SOLID ELECTROLYTIC CAPACITORS , LEAD TYPE |
| C5700 | F1H1H102A219 | Surface mounting multilayer ceramic capacitors , rectangular type (1608 type) |
| C5701 | F1H1A474A107 | SURFACE MOUNTING MULTILAYER CERAMIC CAPACITORS , RECTANGULAR TYPE (1608 TYPE) |
| C5702 | F1H1A474A107 | SURFACE MOUNTING MULTILAYER CERAMIC CAPACITORS , RECTANGULAR TYPE (1608 TYPE) |
| C5703 | F2A1H221B436 | ALUMINUM NON-SOLID ELECTROLYTIC CAPACITORS , LEAD TYPE |
| C5704 | F2A1H221B436 | ALUMINUM NON-SOLID ELECTROLYTIC CAPACITORS , LEAD TYPE |
| C5705 | F1H1H104B047 | SURFACE MOUNTING MULTILAYER CERAMIC CAPACITORS , RECTANGULAR TYPE (1608 TYPE) |
| C5706 | F1H1H104B047 | SURFACE MOUNTING MULTILAYER CERAMIC CAPACITORS , RECTANGULAR TYPE (1608 TYPE) |
| C5707 | F1H1H331A013 | SURFACE MOUNTING MULTILAYER CERAMIC CAPACITORS , RECTANGULAR TYPE (1608 TYPE) |
| C5709 | F1H1H104B047 | SURFACE MOUNTING MULTILAYER CERAMIC CAPACITORS , RECTANGULAR TYPE (1608 TYPE) |
| C5711 | F1H1H104B047 | SURFACE MOUNTING MULTILAYER CERAMIC CAPACITORS , RECTANGULAR TYPE (1608 TYPE) |
| C5712 | F1H1H330A230 | Surface mounting multilayer ceramic capacitors , rectangular type (1608 type) |
| C5713 | F1K2A1040007 | SURFACE MOUNTING MULTILAYER CERAMIC CAPACITORS , RECTANGULAR TYPE (3216 TYPE) |
| C5714 | F1H1H104B047 | SURFACE MOUNTING MULTILAYER CERAMIC CAPACITORS , RECTANGULAR TYPE (1608 TYPE) |
| C5715 | F1J2A221A030 | SURFACE MOUNTING MULTILAYER CERAMIC CAPACITORS , RECTANGULAR TYPE (2125 TYPE) |
| C5716 | F1J2A221A030 | SURFACE MOUNTING MULTILAYER CERAMIC CAPACITORS , RECTANGULAR TYPE (2125 TYPE) |
| C5717 | F1H1H153A219 | Surface mounting multilayer ceramic capacitors , rectangular type (1608 type) |
| C5718 | F1H1H104B047 | SURFACE MOUNTING MULTILAYER CERAMIC CAPACITORS , RECTANGULAR TYPE (1608 TYPE) |
| C5719 | F1H1A474A107 | SURFACE MOUNTING MULTILAYER CERAMIC CAPACITORS , RECTANGULAR TYPE (1608 TYPE) |
| C5720 | F1H1H104B047 | SURFACE MOUNTING MULTILAYER CERAMIC CAPACITORS , RECTANGULAR TYPE (1608 TYPE) |
| C5721 | F1H1H153A219 | Surface mounting multilayer ceramic capacitors , rectangular type (1608 type) |
| C5722 | F1J2A221A030 | SURFACE MOUNTING MULTILAYER CERAMIC CAPACITORS , RECTANGULAR TYPE (2125 TYPE) |

| | | |
|---|---|---|
| C5723 | F1J2A221A030 | SURFACE MOUNTING MULTILAYER CERAMIC CAPACITORS , RECTANGULAR TYPE (2125 TYPE) |
| C5724 | F1H1H104B047 | SURFACE MOUNTING MULTILAYER CERAMIC CAPACITORS , RECTANGULAR TYPE (1608 TYPE) |
| C5725 | F1K2A1040007 | SURFACE MOUNTING MULTILAYER CERAMIC CAPACITORS , RECTANGULAR TYPE (3216 TYPE) |
| C5726 | F1H1H104B047 | SURFACE MOUNTING MULTILAYER CERAMIC CAPACITORS , RECTANGULAR TYPE (1608 TYPE) |
| C5727 | F1H1H104B047 | SURFACE MOUNTING MULTILAYER CERAMIC CAPACITORS , RECTANGULAR TYPE (1608 TYPE) |
| C5729 | F1H1A474A107 | SURFACE MOUNTING MULTILAYER CERAMIC CAPACITORS , RECTANGULAR TYPE (1608 TYPE) |
| C5730 | F1H1H331A013 | SURFACE MOUNTING MULTILAYER CERAMIC CAPACITORS , RECTANGULAR TYPE (1608 TYPE) |
| C5731 | F1H1H102A219 | Surface mounting multilayer ceramic capacitors , rectangular type (1608 type) |
| C5732 | F1H1A474A107 | SURFACE MOUNTING MULTILAYER CERAMIC CAPACITORS , RECTANGULAR TYPE (1608 TYPE) |
| C5733 | F1H1H102A219 | Surface mounting multilayer ceramic capacitors , rectangular type (1608 type) |
| C5734 | ECQV1H474JL3 | METALLIZED PLASTIC FILM CAPACITORS , LEAD TYPE |
| C5735 | ECQV1H474JL3 | METALLIZED PLASTIC FILM CAPACITORS , LEAD TYPE |
| C5736 | F1H1H104B047 | SURFACE MOUNTING MULTILAYER CERAMIC CAPACITORS , RECTANGULAR TYPE (1608 TYPE) |
| C5737 | F1H1H104B047 | SURFACE MOUNTING MULTILAYER CERAMIC CAPACITORS , RECTANGULAR TYPE (1608 TYPE) |
| C5738 | F1H1H103A219 | SURFACE MOUNTING MULTILAYER CERAMIC CAPACITORS , RECTANGULAR TYPE (1608 TYPE) |
| C5740 | F1H1H103A219 | SURFACE MOUNTING MULTILAYER CERAMIC CAPACITORS , RECTANGULAR TYPE (1608 TYPE) |
| C5800 | F1H1H102A219 | Surface mounting multilayer ceramic capacitors , rectangular type (1608 type) |
| C5801 | F1H1A474A107 | SURFACE MOUNTING MULTILAYER CERAMIC CAPACITORS , RECTANGULAR TYPE (1608 TYPE) |
| C5802 | F1H1A474A107 | SURFACE MOUNTING MULTILAYER CERAMIC CAPACITORS , RECTANGULAR TYPE (1608 TYPE) |
| C5803 | F1H1H331A013 | SURFACE MOUNTING MULTILAYER CERAMIC CAPACITORS , RECTANGULAR TYPE (1608 TYPE) |
| C5804 | F2A2A220A388 | ALUMINUM NON-SOLID ELECTROLYTIC CAPACITORS , LEAD TYPE |
| C5805 | F1H1H104B047 | SURFACE MOUNTING MULTILAYER CERAMIC CAPACITORS , RECTANGULAR TYPE (1608 TYPE) |
| C5807 | F1H1H104B047 | SURFACE MOUNTING MULTILAYER CERAMIC CAPACITORS , RECTANGULAR TYPE (1608 TYPE) |
| C5808 | F1H1H330A230 | Surface mounting multilayer ceramic capacitors , rectangular type (1608 type) |
| C5809 | F1K2A1040007 | SURFACE MOUNTING MULTILAYER CERAMIC CAPACITORS , RECTANGULAR TYPE (3216 TYPE) |
| C5810 | F1H1H104B047 | SURFACE MOUNTING MULTILAYER CERAMIC CAPACITORS , RECTANGULAR TYPE (1608 TYPE) |
| C5811 | F1J2A221A030 | SURFACE MOUNTING MULTILAYER CERAMIC CAPACITORS , RECTANGULAR TYPE (2125 TYPE) |
| C5812 | F1H1H153A219 | Surface mounting multilayer ceramic capacitors , rectangular type (1608 type) |
| C5813 | F1J2A221A030 | SURFACE MOUNTING MULTILAYER CERAMIC CAPACITORS , RECTANGULAR TYPE (2125 TYPE) |
| C5814 | F1H1H104B047 | SURFACE MOUNTING MULTILAYER CERAMIC CAPACITORS , RECTANGULAR TYPE (1608 TYPE) |
| C5815 | F1H1C474A140 | SURFACE MOUNTING MULTILAYER CERAMIC CAPACITORS , RECTANGULAR TYPE (1608 TYPE) |
| C5816 | F1H1H104B047 | SURFACE MOUNTING MULTILAYER CERAMIC CAPACITORS , RECTANGULAR TYPE (1608 TYPE) |
| C5817 | F1H1H153A219 | Surface mounting multilayer ceramic capacitors , rectangular type (1608 type) |
| C5818 | F1J2A221A030 | SURFACE MOUNTING MULTILAYER CERAMIC CAPACITORS , RECTANGULAR TYPE (2125 TYPE) |
| C5819 | F1J2A221A030 | SURFACE MOUNTING MULTILAYER CERAMIC CAPACITORS , RECTANGULAR TYPE (2125 TYPE) |
| C5820 | F1H1H104B047 | SURFACE MOUNTING MULTILAYER CERAMIC CAPACITORS , RECTANGULAR TYPE (1608 TYPE) |
| C5821 | F1K2A1040007 | SURFACE MOUNTING MULTILAYER CERAMIC CAPACITORS , RECTANGULAR TYPE (3216 TYPE) |
| C5822 | F1H1H104B047 | SURFACE MOUNTING MULTILAYER CERAMIC CAPACITORS , RECTANGULAR TYPE (1608 TYPE) |
| C5823 | F1H1H104B047 | SURFACE MOUNTING MULTILAYER CERAMIC CAPACITORS , RECTANGULAR TYPE (1608 TYPE) |
| C5825 | F1H1A474A107 | SURFACE MOUNTING MULTILAYER CERAMIC CAPACITORS , RECTANGULAR TYPE (1608 TYPE) |
| C5826 | F1H1H331A013 | SURFACE MOUNTING MULTILAYER CERAMIC CAPACITORS , RECTANGULAR TYPE (1608 TYPE) |
| C5827 | F1H1H102A219 | Surface mounting multilayer ceramic capacitors , rectangular type (1608 type) |
| C5828 | F1H1A474A107 | SURFACE MOUNTING MULTILAYER CERAMIC CAPACITORS , RECTANGULAR TYPE (1608 TYPE) |
| C5829 | F1H1H102A219 | Surface mounting multilayer ceramic capacitors , rectangular type (1608 type) |
| C5830 | ECQV1H474JL3 | METALLIZED PLASTIC FILM CAPACITORS , LEAD TYPE |
| C5831 | ECQV1H474JL3 | METALLIZED PLASTIC FILM CAPACITORS , LEAD TYPE |
| C5832 | F1H1H104B047 | SURFACE MOUNTING MULTILAYER CERAMIC CAPACITORS , RECTANGULAR TYPE (1608 TYPE) |
| C5833 | F1H1H104B047 | SURFACE MOUNTING MULTILAYER CERAMIC CAPACITORS , RECTANGULAR TYPE (1608 TYPE) |
| C5834 | F1H1H103A219 | SURFACE MOUNTING MULTILAYER CERAMIC CAPACITORS , RECTANGULAR TYPE (1608 TYPE) |
| C5835 | F2A1C100A207 | Aluminum non-solid electrolytic capacitors , lead type |
| C5836 | F1H1H103A219 | SURFACE MOUNTING MULTILAYER CERAMIC CAPACITORS , RECTANGULAR TYPE (1608 TYPE) |
| CN2000 | K1KA02BA0061 | 2-PIECE CONNECTORS FOR IN-EQUIPMENT USE (PCB SIDE ) |
| CN2003 | K1MY27AA0267 | 1-PIECE CONNECTORS FOR IN-EQUIPMENT USE |
| CN2005 | K1KA02AA0186 | 2-PIECE CONNECTORS FOR IN-EQUIPMENT USE (PCB SIDE ) |
| CN2007 | K1YZ15000001 | Parts and accessories for connectors use |
| CN2009 | K1MY30AA0267 | 1-PIECE CONNECTORS FOR IN-EQUIPMENT USE |
| CN2011 | K1MY09AA0266 | 1-PIECE CONNECTORS FOR IN-EQUIPMENT USE |
| CN2700 | K1KA05AA0193 | 2-PIECE CONNECTORS FOR IN-EQUIPMENT USE (PCB SIDE ) |
| D2000 | B0JCPD000025 | SCHOTTKY BARRIER DIODES |
| D2001 | DA2J10100L | SWITCHING DIODES |
| D2002 | DZ2J033M0L | Voltage regulation diodes |
| D2003 | DZ2J033M0L | Voltage regulation diodes |
| D2006 | DA2J10100L | SWITCHING DIODES |
| D2008 | DA2J10100L | SWITCHING DIODES |
| D2010 | B0ADCC000002 | Switching diodes |
| D2012 | DA2J10100L | SWITCHING DIODES |
| D2014 | B0ADDJ000032 | SWITCHING DIODES |
| D2015 | B0ACCK000005 | Switching diodes |
| D2017 | B0BC5R6A0266 | VOLTAGE REGULATION DIODES |
| D2018 | B0EAKM000117 | Small capacity silicon rectifier diodes (less than 5 A) |
| D2020 | B0EAKM000117 | Small capacity silicon rectifier diodes (less than 5 A) |
| D2022 | B0EAKM000117 | Small capacity silicon rectifier diodes (less than 5 A) |
| D2028 | DA2J10100L | SWITCHING DIODES |
| D2032 | DA2J10100L | SWITCHING DIODES |
| D2300 | DA2J10100L | SWITCHING DIODES |

| | | |
|---|---|---|
| D5600 | B0ACCK000012 | SWITCHING DIODES |
| D5601 | B0ACCK000012 | SWITCHING DIODES |
| D5602 | DZ2J051M0L | Voltage regulation diodes |
| D5700 | B0HCSP000001 | * INCLUDED IN B0A OR B0E,B0F,B0G (FAST RECOVERY DIODES) |
| D5701 | B0HCSP000001 | * INCLUDED IN B0A OR B0E,B0F,B0G (FAST RECOVERY DIODES) |
| D5702 | B0HCSP000001 | * INCLUDED IN B0A OR B0E,B0F,B0G (FAST RECOVERY DIODES) |
| D5703 | B0HCSP000001 | * INCLUDED IN B0A OR B0E,B0F,B0G (FAST RECOVERY DIODES) |
| D5800 | B0HCSP000001 | * INCLUDED IN B0A OR B0E,B0F,B0G (FAST RECOVERY DIODES) |
| D5801 | B0HCSP000001 | * INCLUDED IN B0A OR B0E,B0F,B0G (FAST RECOVERY DIODES) |
| D5802 | B0HCSP000001 | * INCLUDED IN B0A OR B0E,B0F,B0G (FAST RECOVERY DIODES) |
| D5803 | B0HCSP000001 | * INCLUDED IN B0A OR B0E,B0F,B0G (FAST RECOVERY DIODES) |
| DZ2000 | B0JCPD000025 | SCHOTTKY BARRIER DIODES |
| IC52 | C1AB00003566 | ICS FOR VIDEO / AUDIO |
| IC2000 | C1AB00003256 | ICS FOR VIDEO / AUDIO |
| IC2001 | C0ABBB000067 | Operational amplifiers |
| IC2002 | C0ABBB000067 | Operational amplifiers |
| IC2003 | MN101EF16KXW | 8 BIT 1-CHIP MICROCONTROLLER |
| IC2004 | C0ABBB000067 | Operational amplifiers |
| IC2005 | C0AABB000125 | OPERATIONAL AMPLIFIERS |
| IC2006 | C3EBEY000037 | EEPROM |
| IC2008 | C0DBZYY00311 | ICS FOR POWER SUPPLY |
| IC2010 | C0DAAYG00001 | ICS FOR POWER SUPPLY |
| IC2011 | C0DAAYG00001 | ICS FOR POWER SUPPLY |
| IC2012 | C0ABBB000067 | Operational amplifiers |
| IC2014 | C0DBEYY00123 | ICS FOR POWER SUPPLY |
| IC5600 | C0JBAB000902 | LOGIC ICS |
| IC5700 | C1BA00000497 | * INCLUDED IN C1A (ICS FOR AUDIO EQUIPMENT) |
| IC5800 | C1BA00000497 | * INCLUDED IN C1A (ICS FOR AUDIO EQUIPMENT) |
| JK51 | K4ZZ02000103 | OTHER TERMINALS /TERMINAL BOARDS /ACCESSORIES |
| JK52 | K4AC02B00042 | TERMINALS / TERMINAL BLOCKS |
| JK2000 | K2HA204B0153 | JACKS FOR SMALL SIGNAL (EQUIPMENT SIDE ) |
| JK5601 | K4AZ08A00004 | TERMINALS / TERMINAL BLOCKS |
| L51 | G1CR18JA0020 | SURFACE MOUNTING INDUCTORS |
| L52 | G2A380Y00002 | VARIABLE COILS (INCLUDING IFT) |
| L54 | D0GBR00JA008 | SURFACE MOUNTING FIXED METAL GLAZE FILM ( THICK FILM ) RESISTORS , RECTANGULAR TYPE |
| L2000 | G0A330ZA0045 | * INCLUDED IN G0C (NORMAL-MODE LINE CHOKE COILS) |
| L2001 | G0A330ZA0045 | * INCLUDED IN G0C (NORMAL-MODE LINE CHOKE COILS) |
| L2004 | G1C100KA0101 | SURFACE MOUNTING INDUCTORS |
| L5600 | J0JKB0000020 | Filter for EMI / EMC (Beads cores) |
| L5601 | J0JKB0000020 | Filter for EMI / EMC (Beads cores) |
| L5700 | G0A150L00003 | INDUCTOR(NORMAL-MODE LINE CHOKE COILS) |
| L5800 | G0A150L00003 | INDUCTOR(NORMAL-MODE LINE CHOKE COILS) |
| LB51 | J0JBC0000032 | FILTER FOR EMI / EMC (BEADS CORES) |
| LB2000 | D0GBR00JA008 | SURFACE MOUNTING FIXED METAL GLAZE FILM ( THICK FILM ) RESISTORS , RECTANGULAR TYPE |
| LB2001 | D0GBR00JA008 | SURFACE MOUNTING FIXED METAL GLAZE FILM ( THICK FILM ) RESISTORS , RECTANGULAR TYPE |
| LB2002 | D0GBR00JA008 | SURFACE MOUNTING FIXED METAL GLAZE FILM ( THICK FILM ) RESISTORS , RECTANGULAR TYPE |
| LB2003 | D0GBR00JA008 | SURFACE MOUNTING FIXED METAL GLAZE FILM ( THICK FILM ) RESISTORS , RECTANGULAR TYPE |
| LB2004 | D0GBR00JA008 | SURFACE MOUNTING FIXED METAL GLAZE FILM ( THICK FILM ) RESISTORS , RECTANGULAR TYPE |
| LB2005 | D0GBR00JA008 | SURFACE MOUNTING FIXED METAL GLAZE FILM ( THICK FILM ) RESISTORS , RECTANGULAR TYPE |
| LB2006 | J0JBC0000019 | Filter for EMI / EMC (Beads cores) |
| LB2007 | D0GBR00JA008 | SURFACE MOUNTING FIXED METAL GLAZE FILM ( THICK FILM ) RESISTORS , RECTANGULAR TYPE |
| Q2000 | B1ADCE000012 | SMALL SIGNAL SILICON TRANSISTORS (ALLOWABLE LOSS: LESS THAN 1 W) |
| Q2001 | B1ABCF000231 | SILICON TRANSISTORS |
| Q2004 | B1GDCFJJ0047 | RESISTOR BUILT-IN TYPE TRANSISTORS |
| Q2005 | B1GDCFJJ0047 | RESISTOR BUILT-IN TYPE TRANSISTORS |
| Q2006 | B1GDCFJJ0047 | RESISTOR BUILT-IN TYPE TRANSISTORS |
| Q2007 | B1ABCF000176 | SMALL SIGNAL SILICON TRANSISTORS (ALLOWABLE LOSS: LESS THAN 1 W) |
| Q2008 | B1ABCF000176 | SMALL SIGNAL SILICON TRANSISTORS (ALLOWABLE LOSS: LESS THAN 1 W) |
| Q2009 | B1ABCF000176 | SMALL SIGNAL SILICON TRANSISTORS (ALLOWABLE LOSS: LESS THAN 1 W) |
| Q2010 | B1ABCF000176 | SMALL SIGNAL SILICON TRANSISTORS (ALLOWABLE LOSS: LESS THAN 1 W) |
| Q2011 | B1GBCFLL0037 | RESISTOR BUILT-IN TYPE TRANSISTORS |
| Q2016 | B1ADCE000012 | SMALL SIGNAL SILICON TRANSISTORS (ALLOWABLE LOSS: LESS THAN 1 W) |
| Q2017 | B1GBCFJJ0051 | RESISTOR BUILT-IN TYPE TRANSISTORS |
| Q2018 | B1GBCFJJ0051 | RESISTOR BUILT-IN TYPE TRANSISTORS |
| Q2019 | B1ADCE000012 | SMALL SIGNAL SILICON TRANSISTORS (ALLOWABLE LOSS: LESS THAN 1 W) |
| Q2022 | B1AAJC000019 | SMALL SIGNAL SILICON TRANSISTORS (ALLOWABLE LOSS: LESS THAN 1 W) |
| Q2023 | B1ADCE000012 | SMALL SIGNAL SILICON TRANSISTORS (ALLOWABLE LOSS: LESS THAN 1 W) |
| Q2024 | B1ABCF000231 | SILICON TRANSISTORS |
| Q2025 | B1ABCF000231 | SILICON TRANSISTORS |
| Q2026 | B1ADCE000012 | SMALL SIGNAL SILICON TRANSISTORS (ALLOWABLE LOSS: LESS THAN 1 W) |
| Q2027 | B1ADCE000012 | SMALL SIGNAL SILICON TRANSISTORS (ALLOWABLE LOSS: LESS THAN 1 W) |
| Q2028 | B1ABCF000176 | SMALL SIGNAL SILICON TRANSISTORS (ALLOWABLE LOSS: LESS THAN 1 W) |
| Q2029 | B1ABCF000176 | SMALL SIGNAL SILICON TRANSISTORS (ALLOWABLE LOSS: LESS THAN 1 W) |
| Q2030 | B1ABCF000176 | SMALL SIGNAL SILICON TRANSISTORS (ALLOWABLE LOSS: LESS THAN 1 W) |
| Q2031 | B1ABCF000231 | SILICON TRANSISTORS |

| | | |
|---|---|---|
| Q2032 | B1ABCF000176 | SMALL SIGNAL SILICON TRANSISTORS (ALLOWABLE LOSS: LESS THAN 1 W) |
| Q2033 | B1AAJC000019 | SMALL SIGNAL SILICON TRANSISTORS (ALLOWABLE LOSS: LESS THAN 1 W) |
| Q2035 | B1BABG000007 | POWER SILICON TRANSISTORS (ALLOWABLE LOSS: 1 W OR MORE) |
| Q2037 | B1ABCF000176 | SMALL SIGNAL SILICON TRANSISTORS (ALLOWABLE LOSS: LESS THAN 1 W) |
| Q2038 | B1ABCF000176 | SMALL SIGNAL SILICON TRANSISTORS (ALLOWABLE LOSS: LESS THAN 1 W) |
| Q2039 | B1ADCE000012 | SMALL SIGNAL SILICON TRANSISTORS (ALLOWABLE LOSS: LESS THAN 1 W) |
| Q2040 | B1ABCF000176 | SMALL SIGNAL SILICON TRANSISTORS (ALLOWABLE LOSS: LESS THAN 1 W) |
| Q2041 | B1ABCF000176 | SMALL SIGNAL SILICON TRANSISTORS (ALLOWABLE LOSS: LESS THAN 1 W) |
| Q2042 | B1ABCF000176 | SMALL SIGNAL SILICON TRANSISTORS (ALLOWABLE LOSS: LESS THAN 1 W) |
| Q2050 | B1ADCE000012 | SMALL SIGNAL SILICON TRANSISTORS (ALLOWABLE LOSS: LESS THAN 1 W) |
| Q5600 | B1ADCE000012 | SMALL SIGNAL SILICON TRANSISTORS (ALLOWABLE LOSS: LESS THAN 1 W) |
| Q5601 | B1ABCF000176 | SMALL SIGNAL SILICON TRANSISTORS (ALLOWABLE LOSS: LESS THAN 1 W) |
| Q5602 | B1ABCF000176 | SMALL SIGNAL SILICON TRANSISTORS (ALLOWABLE LOSS: LESS THAN 1 W) |
| Q5603 | B1ABCF000176 | SMALL SIGNAL SILICON TRANSISTORS (ALLOWABLE LOSS: LESS THAN 1 W) |
| Q5604 | B1ABCF000176 | SMALL SIGNAL SILICON TRANSISTORS (ALLOWABLE LOSS: LESS THAN 1 W) |
| QR2000 | B1GBCFJJ0051 | RESISTOR BUILT-IN TYPE TRANSISTORS |
| QR2001 | B1GBCFJJ0051 | RESISTOR BUILT-IN TYPE TRANSISTORS |
| QR2003 | B1GBCFJJ0051 | RESISTOR BUILT-IN TYPE TRANSISTORS |
| QR2004 | B1GBCFGN0016 | RESISTOR BUILT-IN TYPE TRANSISTORS |
| QR2005 | B1GBCFJJ0051 | RESISTOR BUILT-IN TYPE TRANSISTORS |
| QR2006 | B1GBCFJJ0051 | RESISTOR BUILT-IN TYPE TRANSISTORS |
| R51 | ERJ3GEYJ102V | Surface mounting fixed metal glaze film ( thick film ) resistors , rectangular type |
| R52 | ERJ3GEYJ102V | Surface mounting fixed metal glaze film ( thick film ) resistors , rectangular type |
| R53 | ERJ2GEJ472X | SURFACE MOUNTING FIXED METAL GLAZE FILM ( THICK FILM ) RESISTORS , RECTANGULAR TYPE |
| R54 | ERJ2GEJ472X | SURFACE MOUNTING FIXED METAL GLAZE FILM ( THICK FILM ) RESISTORS , RECTANGULAR TYPE |
| R55 | ERJ2GEJ221X | SURFACE MOUNTING FIXED METAL GLAZE FILM ( THICK FILM ) RESISTORS , RECTANGULAR TYPE |
| R56 | ERJ3GEYJ221V | Surface mounting fixed metal glaze film ( thick film ) resistors , rectangular type |
| R57 | ERJ2GEJ102X | SURFACE MOUNTING FIXED METAL GLAZE FILM ( THICK FILM ) RESISTORS , RECTANGULAR TYPE |
| R59 | ERJ3GEYJ222V | Surface mounting fixed metal glaze film ( thick film ) resistors , rectangular type |
| R61 | ERJ3GEYJ473V | SURFACE MOUNTING FIXED METAL GLAZE FILM (THICK FILM) RESISTORS, RECTANGULAR TYPE |
| R62 | ERJ3GEYJ473V | SURFACE MOUNTING FIXED METAL GLAZE FILM (THICK FILM) RESISTORS, RECTANGULAR TYPE |
| R64 | D0GBR00JA008 | SURFACE MOUNTING FIXED METAL GLAZE FILM ( THICK FILM ) RESISTORS , RECTANGULAR TYPE |
| R2001 | ERJ3GEYJ822V | Surface mounting fixed metal glaze film ( thick film ) resistors , rectangular type |
| R2002 | ERJ3GEYJ822V | Surface mounting fixed metal glaze film ( thick film ) resistors , rectangular type |
| R2003 | ERJ3GEYJ392V | Surface mounting fixed metal glaze film ( thick film ) resistors , rectangular type |
| R2004 | ERJ3GEYJ392V | Surface mounting fixed metal glaze film ( thick film ) resistors , rectangular type |
| R2005 | ERJ3GEYJ103V | Surface mounting fixed metal glaze film ( thick film ) resistors , rectangular type |
| R2006 | ERJ3GEYJ103V | Surface mounting fixed metal glaze film ( thick film ) resistors , rectangular type |
| R2007 | ERJ3GEYJ332V | Surface mounting fixed metal glaze film ( thick film ) resistors , rectangular type |
| R2008 | ERJ3GEYJ332V | Surface mounting fixed metal glaze film ( thick film ) resistors , rectangular type |
| R2010 | ERJ3GEY0R00V | SURFACE MOUNTING OTHER FIXED RESISTORS , RECTANGULAR TYPE ( JUMPER WIRE RESISTOR INCLUDED )1 |
| R2011 | ERJ3GEY0R00V | SURFACE MOUNTING OTHER FIXED RESISTORS , RECTANGULAR TYPE ( JUMPER WIRE RESISTOR INCLUDED )1 |
| R2012 | ERJ3GEYJ681V | Surface mounting fixed metal glaze film ( thick film ) resistors , rectangular type |
| R2013 | ERJ3GEY0R00V | SURFACE MOUNTING OTHER FIXED RESISTORS , RECTANGULAR TYPE ( JUMPER WIRE RESISTOR INCLUDED )1 |
| R2014 | ERJ3GEYJ103V | Surface mounting fixed metal glaze film ( thick film ) resistors , rectangular type |
| R2017 | D0GB332JA008 | SURFACE MOUNTING FIXED METAL GLAZE FILM ( THICK FILM ) RESISTORS , RECTANGULAR TYPE |
| R2018 | ERJ3GEYJ682V | Surface mounting fixed metal glaze film ( thick film ) resistors , rectangular type |
| R2019 | ERJ3GEYJ683V | Surface mounting fixed metal glaze film ( thick film ) resistors , rectangular type |
| R2020 | ERJ3GEY0R00V | SURFACE MOUNTING OTHER FIXED RESISTORS , RECTANGULAR TYPE ( JUMPER WIRE RESISTOR INCLUDED )1 |
| R2021 | ERJ3GEY0R00V | SURFACE MOUNTING OTHER FIXED RESISTORS , RECTANGULAR TYPE ( JUMPER WIRE RESISTOR INCLUDED )1 |
| R2024 | D0GB392JA008 | SURFACE MOUNTING FIXED METAL GLAZE FILM ( THICK FILM ) RESISTORS , RECTANGULAR TYPE |
| R2025 | D0GB392JA008 | SURFACE MOUNTING FIXED METAL GLAZE FILM ( THICK FILM ) RESISTORS , RECTANGULAR TYPE |
| R2026 | ERJ3GEYJ473V | SURFACE MOUNTING FIXED METAL GLAZE FILM (THICK FILM) RESISTORS, RECTANGULAR TYPE |
| R2027 | ERJ3GEY0R00V | SURFACE MOUNTING OTHER FIXED RESISTORS , RECTANGULAR TYPE ( JUMPER WIRE RESISTOR INCLUDED )1 |
| R2028 | ERJ3GEYJ2R2V | Surface mounting fixed metal glaze film ( thick film ) resistors , rectangular type |
| R2029 | D0GB473JA008 | SURFACE MOUNTING FIXED METAL GLAZE FILM ( THICK FILM ) RESISTORS , RECTANGULAR TYPE |
| R2030 | D0GB473JA008 | SURFACE MOUNTING FIXED METAL GLAZE FILM ( THICK FILM ) RESISTORS , RECTANGULAR TYPE |
| R2031 | D0GB473JA008 | SURFACE MOUNTING FIXED METAL GLAZE FILM ( THICK FILM ) RESISTORS , RECTANGULAR TYPE |
| R2032 | D0GB473JA008 | SURFACE MOUNTING FIXED METAL GLAZE FILM ( THICK FILM ) RESISTORS , RECTANGULAR TYPE |
| R2033 | D0GB334JA008 | SURFACE MOUNTING FIXED METAL GLAZE FILM ( THICK FILM ) RESISTORS , RECTANGULAR TYPE |
| R2035 | ERJ3GEYJ271V | Surface mounting fixed metal glaze film ( thick film ) resistors , rectangular type |
| R2036 | D0GB823JA008 | SURFACE MOUNTING FIXED METAL GLAZE FILM ( THICK FILM ) RESISTORS , RECTANGULAR TYPE |
| R2037 | D0GB101JA008 | SURFACE MOUNTING FIXED METAL GLAZE FILM ( THICK FILM ) RESISTORS , RECTANGULAR TYPE |
| R2039 | D0GB223JA008 | SURFACE MOUNTING FIXED METAL GLAZE FILM ( THICK FILM ) RESISTORS , RECTANGULAR TYPE |
| R2040 | D0GB473JA008 | SURFACE MOUNTING FIXED METAL GLAZE FILM ( THICK FILM ) RESISTORS , RECTANGULAR TYPE |
| R2041 | D0GB683JA008 | SURFACE MOUNTING FIXED METAL GLAZE FILM ( THICK FILM ) RESISTORS , RECTANGULAR TYPE |
| R2042 | D0GB102JA008 | SURFACE MOUNTING FIXED METAL GLAZE FILM ( THICK FILM ) RESISTORS , RECTANGULAR TYPE |
| R2043 | D0GB223JA008 | SURFACE MOUNTING FIXED METAL GLAZE FILM ( THICK FILM ) RESISTORS , RECTANGULAR TYPE |
| R2044 | D0GB223JA008 | SURFACE MOUNTING FIXED METAL GLAZE FILM ( THICK FILM ) RESISTORS , RECTANGULAR TYPE |
| R2045 | D0GB223JA008 | SURFACE MOUNTING FIXED METAL GLAZE FILM ( THICK FILM ) RESISTORS , RECTANGULAR TYPE |
| R2046 | ERJ3GEYJ104V | Surface mounting fixed metal glaze film ( thick film ) resistors , rectangular type |
| R2048 | D0AF330JA039 | FIXED CARBON FILM RESISTORS , LEAD TYPE |
| R2049 | D0GB681JA008 | SURFACE MOUNTING FIXED METAL GLAZE FILM ( THICK FILM ) RESISTORS , RECTANGULAR TYPE |
| R2050 | D0GB223JA008 | SURFACE MOUNTING FIXED METAL GLAZE FILM ( THICK FILM ) RESISTORS , RECTANGULAR TYPE |
| R2051 | ERJ3GEYJ102V | Surface mounting fixed metal glaze film ( thick film ) resistors , rectangular type |

| | | |
|---|---|---|
| R2052 | ERJ3GEYJ102V | Surface mounting  fixed metal glaze film ( thick film ) resistors , rectangular type |
| R2053 | D0GB223JA008 | SURFACE MOUNTING  FIXED METAL GLAZE FILM ( THICK FILM ) RESISTORS , RECTANGULAR TYPE |
| R2054 | ERJ3GEY0R00V | SURFACE MOUNTING OTHER FIXED RESISTORS , RECTANGULAR TYPE ( JUMPER WIRE RESISTOR INCLUDED )1 |
| R2056 | D0GB472JA008 | SURFACE MOUNTING  FIXED METAL GLAZE FILM ( THICK FILM ) RESISTORS , RECTANGULAR TYPE |
| R2057 | D0GB472JA008 | SURFACE MOUNTING  FIXED METAL GLAZE FILM ( THICK FILM ) RESISTORS , RECTANGULAR TYPE |
| R2058 | D0GB472JA008 | SURFACE MOUNTING  FIXED METAL GLAZE FILM ( THICK FILM ) RESISTORS , RECTANGULAR TYPE |
| R2059 | D0GB472JA008 | SURFACE MOUNTING  FIXED METAL GLAZE FILM ( THICK FILM ) RESISTORS , RECTANGULAR TYPE |
| R2060 | D0GB682JA008 | SURFACE MOUNTING  FIXED METAL GLAZE FILM ( THICK FILM ) RESISTORS , RECTANGULAR TYPE |
| R2061 | D0GB682JA008 | SURFACE MOUNTING  FIXED METAL GLAZE FILM ( THICK FILM ) RESISTORS , RECTANGULAR TYPE |
| R2062 | D0GB154JA008 | SURFACE MOUNTING  FIXED METAL GLAZE FILM ( THICK FILM ) RESISTORS , RECTANGULAR TYPE |
| R2063 | D0GB103JA008 | SURFACE MOUNTING  FIXED METAL GLAZE FILM ( THICK FILM ) RESISTORS , RECTANGULAR TYPE |
| R2064 | D0GB153JA008 | SURFACE MOUNTING  FIXED METAL GLAZE FILM ( THICK FILM ) RESISTORS , RECTANGULAR TYPE |
| R2065 | ERJ3GEYJ473V | SURFACE MOUNTING FIXED METAL GLAZE FILM (THICK FILM) RESISTORS, RECTANGULAR TYPE |
| R2066 | ERJ3GEYJ473V | SURFACE MOUNTING FIXED METAL GLAZE FILM (THICK FILM) RESISTORS, RECTANGULAR TYPE |
| R2067 | ERJ3GEYJ473V | SURFACE MOUNTING FIXED METAL GLAZE FILM (THICK FILM) RESISTORS, RECTANGULAR TYPE |
| R2068 | ERJ3GEY0R00V | SURFACE MOUNTING OTHER FIXED RESISTORS , RECTANGULAR TYPE ( JUMPER WIRE RESISTOR INCLUDED )1 |
| R2069 | ERJ3GEYJ102V | Surface mounting  fixed metal glaze film ( thick film ) resistors , rectangular type |
| R2070 | ERJ3GEYJ473V | SURFACE MOUNTING FIXED METAL GLAZE FILM (THICK FILM) RESISTORS, RECTANGULAR TYPE |
| R2073 | ERJ3GEYJ104V | Surface mounting  fixed metal glaze film ( thick film ) resistors , rectangular type |
| R2074 | ERJ3GEYJ473V | SURFACE MOUNTING FIXED METAL GLAZE FILM (THICK FILM) RESISTORS, RECTANGULAR TYPE |
| R2075 | ERJ3GEYJ473V | SURFACE MOUNTING FIXED METAL GLAZE FILM (THICK FILM) RESISTORS, RECTANGULAR TYPE |
| R2076 | ERJ3GEYJ102V | Surface mounting  fixed metal glaze film ( thick film ) resistors , rectangular type |
| R2077 | ERJ3GEYJ102V | Surface mounting  fixed metal glaze film ( thick film ) resistors , rectangular type |
| R2078 | ERJ3GEYJ563V | Surface mounting  fixed metal glaze film ( thick film ) resistors , rectangular type |
| R2079 | D0AF330JA039 | FIXED CARBON FILM RESISTORS , LEAD TYPE |
| R2082 | ERJ3GEYJ104V | Surface mounting  fixed metal glaze film ( thick film ) resistors , rectangular type |
| R2083 | ERJ3GEYJ473V | SURFACE MOUNTING FIXED METAL GLAZE FILM (THICK FILM) RESISTORS, RECTANGULAR TYPE |
| R2084 | D0GB103JA008 | SURFACE MOUNTING  FIXED METAL GLAZE FILM ( THICK FILM ) RESISTORS , RECTANGULAR TYPE |
| R2085 | D0GB223JA008 | SURFACE MOUNTING  FIXED METAL GLAZE FILM ( THICK FILM ) RESISTORS , RECTANGULAR TYPE |
| R2087 | ERJ3GEY0R00V | SURFACE MOUNTING OTHER FIXED RESISTORS , RECTANGULAR TYPE ( JUMPER WIRE RESISTOR INCLUDED )1 |
| R2089 | D0GB103JA008 | SURFACE MOUNTING  FIXED METAL GLAZE FILM ( THICK FILM ) RESISTORS , RECTANGULAR TYPE |
| R2093 | ERJ3GEYJ392V | Surface mounting  fixed metal glaze film ( thick film ) resistors , rectangular type |
| R2094 | ERJ3GEYJ392V | Surface mounting  fixed metal glaze film ( thick film ) resistors , rectangular type |
| R2095 | ERJ3GEYJ473V | SURFACE MOUNTING FIXED METAL GLAZE FILM (THICK FILM) RESISTORS, RECTANGULAR TYPE |
| R2096 | ERJ3GEYJ473V | SURFACE MOUNTING FIXED METAL GLAZE FILM (THICK FILM) RESISTORS, RECTANGULAR TYPE |
| R2098 | ERJ3GEYJ472V | Surface mounting  fixed metal glaze film ( thick film ) resistors , rectangular type |
| R2099 | ERJ3GEYJ103V | Surface mounting  fixed metal glaze film ( thick film ) resistors , rectangular type |
| R2101 | D0GB101JA008 | SURFACE MOUNTING  FIXED METAL GLAZE FILM ( THICK FILM ) RESISTORS , RECTANGULAR TYPE |
| R2102 | ERJ3GEYJ472V | Surface mounting  fixed metal glaze film ( thick film ) resistors , rectangular type |
| R2103 | ERJ3GEYJ681V | Surface mounting  fixed metal glaze film ( thick film ) resistors , rectangular type |
| R2105 | ERJ3GEYJ104V | Surface mounting  fixed metal glaze film ( thick film ) resistors , rectangular type |
| R2107 | D0AF220JA039 | FIXED CARBON FILM RESISTORS , LEAD TYPE |
| R2108 | ERJ3GEYJ473V | SURFACE MOUNTING FIXED METAL GLAZE FILM (THICK FILM) RESISTORS, RECTANGULAR TYPE |
| R2110 | D0GB106JA008 | SURFACE MOUNTING  FIXED METAL GLAZE FILM ( THICK FILM ) RESISTORS , RECTANGULAR TYPE |
| R2111 | D0GB473JA008 | SURFACE MOUNTING  FIXED METAL GLAZE FILM ( THICK FILM ) RESISTORS , RECTANGULAR TYPE |
| R2112 | ERJ3GEYJ103V | Surface mounting  fixed metal glaze film ( thick film ) resistors , rectangular type |
| R2113 | ERJ3GEYJ103V | Surface mounting  fixed metal glaze film ( thick film ) resistors , rectangular type |
| R2114 | ERJ3GEYJ473V | SURFACE MOUNTING FIXED METAL GLAZE FILM (THICK FILM) RESISTORS, RECTANGULAR TYPE |
| R2115 | ERJ3GEYJ473V | SURFACE MOUNTING FIXED METAL GLAZE FILM (THICK FILM) RESISTORS, RECTANGULAR TYPE |
| R2117 | ERJ3GEYJ473V | SURFACE MOUNTING FIXED METAL GLAZE FILM (THICK FILM) RESISTORS, RECTANGULAR TYPE |
| R2118 | ERJ3GEYJ473V | SURFACE MOUNTING FIXED METAL GLAZE FILM (THICK FILM) RESISTORS, RECTANGULAR TYPE |
| R2119 | D0GB103JA008 | SURFACE MOUNTING  FIXED METAL GLAZE FILM ( THICK FILM ) RESISTORS , RECTANGULAR TYPE |
| R2120 | ERJ3GEYJ473V | SURFACE MOUNTING FIXED METAL GLAZE FILM (THICK FILM) RESISTORS, RECTANGULAR TYPE |
| R2121 | ERJ3GEYJ475V | Surface mounting  fixed metal glaze film ( thick film ) resistors , rectangular type |
| R2123 | ERJ3GEYJ564V | Surface mounting  fixed metal glaze film ( thick film ) resistors , rectangular type |
| R2124 | D0GB153JA008 | SURFACE MOUNTING  FIXED METAL GLAZE FILM ( THICK FILM ) RESISTORS , RECTANGULAR TYPE |
| R2125 | D0GB102JA008 | SURFACE MOUNTING  FIXED METAL GLAZE FILM ( THICK FILM ) RESISTORS , RECTANGULAR TYPE |
| R2126 | ERJ3GEYJ473V | SURFACE MOUNTING FIXED METAL GLAZE FILM (THICK FILM) RESISTORS, RECTANGULAR TYPE |
| R2127 | ERJ3GEY0R00V | SURFACE MOUNTING OTHER FIXED RESISTORS , RECTANGULAR TYPE ( JUMPER WIRE RESISTOR INCLUDED )1 |
| R2128 | D0GBR00JA008 | SURFACE MOUNTING  FIXED METAL GLAZE FILM ( THICK FILM ) RESISTORS , RECTANGULAR TYPE |
| R2129 | D0GBR00JA008 | SURFACE MOUNTING  FIXED METAL GLAZE FILM ( THICK FILM ) RESISTORS , RECTANGULAR TYPE |
| R2130 | ERJ3GEYJ102V | Surface mounting  fixed metal glaze film ( thick film ) resistors , rectangular type |
| R2131 | D0GB102JA008 | SURFACE MOUNTING  FIXED METAL GLAZE FILM ( THICK FILM ) RESISTORS , RECTANGULAR TYPE |
| R2132 | D0GB102JA008 | SURFACE MOUNTING  FIXED METAL GLAZE FILM ( THICK FILM ) RESISTORS , RECTANGULAR TYPE |
| R2133 | D0GBR00JA008 | SURFACE MOUNTING  FIXED METAL GLAZE FILM ( THICK FILM ) RESISTORS , RECTANGULAR TYPE |
| R2134 | D0GBR00JA008 | SURFACE MOUNTING  FIXED METAL GLAZE FILM ( THICK FILM ) RESISTORS , RECTANGULAR TYPE |
| R2135 | D0GB392JA008 | SURFACE MOUNTING  FIXED METAL GLAZE FILM ( THICK FILM ) RESISTORS , RECTANGULAR TYPE |
| R2136 | ERJ3GEY0R00V | SURFACE MOUNTING OTHER FIXED RESISTORS , RECTANGULAR TYPE ( JUMPER WIRE RESISTOR INCLUDED )1 |
| R2137 | D0GB562JA008 | SURFACE MOUNTING  FIXED METAL GLAZE FILM ( THICK FILM ) RESISTORS , RECTANGULAR TYPE |
| R2138 | D0GB562JA008 | SURFACE MOUNTING  FIXED METAL GLAZE FILM ( THICK FILM ) RESISTORS , RECTANGULAR TYPE |
| R2140 | ERJ3GEY0R00V | SURFACE MOUNTING OTHER FIXED RESISTORS , RECTANGULAR TYPE ( JUMPER WIRE RESISTOR INCLUDED )1 |
| R2145 | D0GB103JA008 | SURFACE MOUNTING  FIXED METAL GLAZE FILM ( THICK FILM ) RESISTORS , RECTANGULAR TYPE |
| R2146 | D0GB823JA008 | SURFACE MOUNTING  FIXED METAL GLAZE FILM ( THICK FILM ) RESISTORS , RECTANGULAR TYPE |
| R2147 | D0GB153JA008 | SURFACE MOUNTING  FIXED METAL GLAZE FILM ( THICK FILM ) RESISTORS , RECTANGULAR TYPE |
| R2148 | D0GB102JA008 | SURFACE MOUNTING  FIXED METAL GLAZE FILM ( THICK FILM ) RESISTORS , RECTANGULAR TYPE |

| | | |
|---|---|---|
| R2149 | D0GB471JA008 | SURFACE MOUNTING FIXED METAL GLAZE FILM ( THICK FILM ) RESISTORS , RECTANGULAR TYPE |
| R2150 | D0GB823JA008 | SURFACE MOUNTING FIXED METAL GLAZE FILM ( THICK FILM ) RESISTORS , RECTANGULAR TYPE |
| R2151 | D0GB183JA008 | SURFACE MOUNTING FIXED METAL GLAZE FILM ( THICK FILM ) RESISTORS , RECTANGULAR TYPE |
| R2152 | ERJ3GEYJ153V | Surface mounting fixed metal glaze film ( thick film ) resistors , rectangular type |
| R2153 | ERJ3GEYJ104V | Surface mounting fixed metal glaze film ( thick film ) resistors , rectangular type |
| R2154 | ERJ3GEYJ153V | Surface mounting fixed metal glaze film ( thick film ) resistors , rectangular type |
| R2156 | ERJ3GEYJ105V | Surface mounting fixed metal glaze film ( thick film ) resistors , rectangular type |
| R2157 | D0GBR00JA008 | SURFACE MOUNTING FIXED METAL GLAZE FILM ( THICK FILM ) RESISTORS , RECTANGULAR TYPE |
| R2162 | ERJ3GEY0R00V | SURFACE MOUNTING OTHER FIXED RESISTORS , RECTANGULAR TYPE ( JUMPER WIRE RESISTOR INCLUDED )1 |
| R2163 | ERJ3GEY0R00V | SURFACE MOUNTING OTHER FIXED RESISTORS , RECTANGULAR TYPE ( JUMPER WIRE RESISTOR INCLUDED )1 |
| R2165 | ERJ3GEYJ102V | Surface mounting fixed metal glaze film ( thick film ) resistors , rectangular type |
| R2167 | D0GB222JA008 | SURFACE MOUNTING FIXED METAL GLAZE FILM ( THICK FILM ) RESISTORS , RECTANGULAR TYPE |
| R2171 | D0GB183JA008 | SURFACE MOUNTING FIXED METAL GLAZE FILM ( THICK FILM ) RESISTORS , RECTANGULAR TYPE |
| R2173 | ERJ3GEYJ153V | Surface mounting fixed metal glaze film ( thick film ) resistors , rectangular type |
| R2174 | ERJ3GEYJ103V | Surface mounting fixed metal glaze film ( thick film ) resistors , rectangular type |
| R2176 | ERJ3RBD152V | Surface mounting fixed metal glaze film ( thick film ) resistors , rectangular type |
| R2177 | ERJ3GEYJ153V | Surface mounting fixed metal glaze film ( thick film ) resistors , rectangular type |
| R2178 | ERJ3GEYJ103V | Surface mounting fixed metal glaze film ( thick film ) resistors , rectangular type |
| R2179 | D0GB123JA008 | SURFACE MOUNTING FIXED METAL GLAZE FILM ( THICK FILM ) RESISTORS , RECTANGULAR TYPE |
| R2180 | D0GB104JA008 | SURFACE MOUNTING FIXED METAL GLAZE FILM ( THICK FILM ) RESISTORS , RECTANGULAR TYPE |
| R2182 | ERJ3GEYJ103V | Surface mounting fixed metal glaze film ( thick film ) resistors , rectangular type |
| R2184 | D0GB183JA008 | SURFACE MOUNTING FIXED METAL GLAZE FILM ( THICK FILM ) RESISTORS , RECTANGULAR TYPE |
| R2185 | ERJ3GEYJ103V | Surface mounting fixed metal glaze film ( thick film ) resistors , rectangular type |
| R2189 | ERJ3GEYJ473V | SURFACE MOUNTING FIXED METAL GLAZE FILM (THICK FILM) RESISTORS, RECTANGULAR TYPE |
| R2192 | ERJ3RBD102V | Surface mounting fixed metal glaze film ( thick film ) resistors , rectangular type |
| R2193 | ERJ3GEY0R00V | SURFACE MOUNTING OTHER FIXED RESISTORS , RECTANGULAR TYPE ( JUMPER WIRE RESISTOR INCLUDED )1 |
| R2196 | ERJ3GEYJ102V | Surface mounting fixed metal glaze film ( thick film ) resistors , rectangular type |
| R2198 | ERJ3GEYJ102V | Surface mounting fixed metal glaze film ( thick film ) resistors , rectangular type |
| R2205 | ERJ3GEYJ472V | Surface mounting fixed metal glaze film ( thick film ) resistors , rectangular type |
| R2206 | ERJ3GEYJ472V | Surface mounting fixed metal glaze film ( thick film ) resistors , rectangular type |
| R2218 | ERJ3GEY0R00V | SURFACE MOUNTING OTHER FIXED RESISTORS , RECTANGULAR TYPE ( JUMPER WIRE RESISTOR INCLUDED )1 |
| R2224 | D0GBR00JA008 | SURFACE MOUNTING FIXED METAL GLAZE FILM ( THICK FILM ) RESISTORS , RECTANGULAR TYPE |
| R2225 | D0GBR00JA008 | SURFACE MOUNTING FIXED METAL GLAZE FILM ( THICK FILM ) RESISTORS , RECTANGULAR TYPE |
| R2226 | ERJ3GEYJ473V | SURFACE MOUNTING FIXED METAL GLAZE FILM (THICK FILM) RESISTORS, RECTANGULAR TYPE |
| R2227 | ERJ3GEYJ473V | SURFACE MOUNTING FIXED METAL GLAZE FILM (THICK FILM) RESISTORS, RECTANGULAR TYPE |
| R2229 | ERJ3GEYJ103V | Surface mounting fixed metal glaze film ( thick film ) resistors , rectangular type |
| R2238 | D0GB182JA008 | SURFACE MOUNTING FIXED METAL GLAZE FILM ( THICK FILM ) RESISTORS , RECTANGULAR TYPE |
| R2239 | D0GB182JA008 | SURFACE MOUNTING FIXED METAL GLAZE FILM ( THICK FILM ) RESISTORS , RECTANGULAR TYPE |
| R2241 | D0GB273JA008 | SURFACE MOUNTING FIXED METAL GLAZE FILM ( THICK FILM ) RESISTORS , RECTANGULAR TYPE |
| R2242 | D0GB273JA008 | SURFACE MOUNTING FIXED METAL GLAZE FILM ( THICK FILM ) RESISTORS , RECTANGULAR TYPE |
| R2244 | D0GB472JA008 | SURFACE MOUNTING FIXED METAL GLAZE FILM ( THICK FILM ) RESISTORS , RECTANGULAR TYPE |
| R2245 | D0GB472JA008 | SURFACE MOUNTING FIXED METAL GLAZE FILM ( THICK FILM ) RESISTORS , RECTANGULAR TYPE |
| R2246 | ERJ3GEYJ101V | Surface mounting fixed metal glaze film ( thick film ) resistors , rectangular type |
| R2247 | ERJ3GEY0R00V | SURFACE MOUNTING OTHER FIXED RESISTORS , RECTANGULAR TYPE ( JUMPER WIRE RESISTOR INCLUDED )1 |
| R2248 | ERJ3GEYJ153V | Surface mounting fixed metal glaze film ( thick film ) resistors , rectangular type |
| R2250 | ERJ3GEYJ183V | Surface mounting fixed metal glaze film ( thick film ) resistors , rectangular type |
| R2251 | ERJ3GEYJ123V | Surface mounting fixed metal glaze film ( thick film ) resistors , rectangular type |
| R2254 | D0GB105JA008 | SURFACE MOUNTING FIXED METAL GLAZE FILM ( THICK FILM ) RESISTORS , RECTANGULAR TYPE |
| R2255 | D0GB105JA008 | SURFACE MOUNTING FIXED METAL GLAZE FILM ( THICK FILM ) RESISTORS , RECTANGULAR TYPE |
| R2256 | D0GB123JA008 | SURFACE MOUNTING FIXED METAL GLAZE FILM ( THICK FILM ) RESISTORS , RECTANGULAR TYPE |
| R2257 | D0GB123JA008 | SURFACE MOUNTING FIXED METAL GLAZE FILM ( THICK FILM ) RESISTORS , RECTANGULAR TYPE |
| R2258 | D0GB153JA008 | SURFACE MOUNTING FIXED METAL GLAZE FILM ( THICK FILM ) RESISTORS , RECTANGULAR TYPE |
| R2259 | D0GB153JA008 | SURFACE MOUNTING FIXED METAL GLAZE FILM ( THICK FILM ) RESISTORS , RECTANGULAR TYPE |
| R2264 | D0GB103JA008 | SURFACE MOUNTING FIXED METAL GLAZE FILM ( THICK FILM ) RESISTORS , RECTANGULAR TYPE |
| R2265 | D0GB103JA008 | SURFACE MOUNTING FIXED METAL GLAZE FILM ( THICK FILM ) RESISTORS , RECTANGULAR TYPE |
| R2266 | D0GB682JA008 | SURFACE MOUNTING FIXED METAL GLAZE FILM ( THICK FILM ) RESISTORS , RECTANGULAR TYPE |
| R2267 | D0GB682JA008 | SURFACE MOUNTING FIXED METAL GLAZE FILM ( THICK FILM ) RESISTORS , RECTANGULAR TYPE |
| R2268 | D0GB272JA008 | SURFACE MOUNTING FIXED METAL GLAZE FILM ( THICK FILM ) RESISTORS , RECTANGULAR TYPE |
| R2269 | D0GB393JA008 | SURFACE MOUNTING FIXED METAL GLAZE FILM ( THICK FILM ) RESISTORS , RECTANGULAR TYPE |
| R2270 | D0GB393JA008 | SURFACE MOUNTING FIXED METAL GLAZE FILM ( THICK FILM ) RESISTORS , RECTANGULAR TYPE |
| R2271 | ERJ3GEYJ104V | Surface mounting fixed metal glaze film ( thick film ) resistors , rectangular type |
| R2272 | D0GB272JA008 | SURFACE MOUNTING FIXED METAL GLAZE FILM ( THICK FILM ) RESISTORS , RECTANGULAR TYPE |
| R2273 | ERJ3GEYJ2R2V | Surface mounting fixed metal glaze film ( thick film ) resistors , rectangular type |
| R2274 | ERJ3GEYJ2R2V | Surface mounting fixed metal glaze film ( thick film ) resistors , rectangular type |
| R2275 | ERJ3GEYJ2R2V | Surface mounting fixed metal glaze film ( thick film ) resistors , rectangular type |
| R2276 | ERJ3GEYJ271V | Surface mounting fixed metal glaze film ( thick film ) resistors , rectangular type |
| R2278 | ERJ3GEYJ101V | Surface mounting fixed metal glaze film ( thick film ) resistors , rectangular type |
| R2279 | ERJ3GEY0R00V | SURFACE MOUNTING OTHER FIXED RESISTORS , RECTANGULAR TYPE ( JUMPER WIRE RESISTOR INCLUDED )1 |
| R2281 | D0GB682JA008 | SURFACE MOUNTING FIXED METAL GLAZE FILM ( THICK FILM ) RESISTORS , RECTANGULAR TYPE |
| R2290 | D0GB472JA008 | SURFACE MOUNTING FIXED METAL GLAZE FILM ( THICK FILM ) RESISTORS , RECTANGULAR TYPE |
| R2291 | D0GB472JA008 | SURFACE MOUNTING FIXED METAL GLAZE FILM ( THICK FILM ) RESISTORS , RECTANGULAR TYPE |
| R2292 | D0GB103JA008 | SURFACE MOUNTING FIXED METAL GLAZE FILM ( THICK FILM ) RESISTORS , RECTANGULAR TYPE |
| R2293 | D0GB103JA008 | SURFACE MOUNTING FIXED METAL GLAZE FILM ( THICK FILM ) RESISTORS , RECTANGULAR TYPE |
| R2294 | ERJ3GEYJ682V | Surface mounting fixed metal glaze film ( thick film ) resistors , rectangular type |
| R2295 | ERJ3GEYJ682V | Surface mounting fixed metal glaze film ( thick film ) resistors , rectangular type |

| | | |
|---|---|---|
| R2296 | ERJ3GEY0R00V | SURFACE MOUNTING OTHER FIXED RESISTORS , RECTANGULAR TYPE ( JUMPER WIRE RESISTOR INCLUDED )1 |
| R2305 | D0GB182JA008 | SURFACE MOUNTING FIXED METAL GLAZE FILM ( THICK FILM ) RESISTORS , RECTANGULAR TYPE |
| R2308 | D0GB182JA008 | SURFACE MOUNTING FIXED METAL GLAZE FILM ( THICK FILM ) RESISTORS , RECTANGULAR TYPE |
| R2310 | ERJ3RBD222V | Surface mounting fixed metal glaze film ( thick film ) resistors , rectangular type |
| R2311 | ERJ3RBD152V | Surface mounting fixed metal glaze film ( thick film ) resistors , rectangular type |
| R2320 | D0GB273JA008 | SURFACE MOUNTING FIXED METAL GLAZE FILM ( THICK FILM ) RESISTORS , RECTANGULAR TYPE |
| R2321 | D0GB273JA008 | SURFACE MOUNTING FIXED METAL GLAZE FILM ( THICK FILM ) RESISTORS , RECTANGULAR TYPE |
| R2329 | ERJ3GEYJ103V | Surface mounting fixed metal glaze film ( thick film ) resistors , rectangular type |
| R2332 | ERJ3GEYJ103V | Surface mounting fixed metal glaze film ( thick film ) resistors , rectangular type |
| R2333 | ERG2SJ471E | Fixed metal oxide film resistors , lead type |
| R2334 | ERG2SJ471E | Fixed metal oxide film resistors , lead type |
| R2335 | ERJ3GEYJ102V | Surface mounting fixed metal glaze film ( thick film ) resistors , rectangular type |
| R2336 | ERG2SJ471E | Fixed metal oxide film resistors , lead type |
| R2337 | ERG2SJ471E | Fixed metal oxide film resistors , lead type |
| R2338 | ERG2SJ471E | Fixed metal oxide film resistors , lead type |
| R2339 | ERG2SJ471E | Fixed metal oxide film resistors , lead type |
| R2340 | ERG2SJ471E | Fixed metal oxide film resistors , lead type |
| R2341 | ERG2SJ471E | Fixed metal oxide film resistors , lead type |
| R2343 | ERJ3GEY0R00V | SURFACE MOUNTING OTHER FIXED RESISTORS , RECTANGULAR TYPE ( JUMPER WIRE RESISTOR INCLUDED )1 |
| R2344 | ERJ3GEYJ332V | Surface mounting fixed metal glaze film ( thick film ) resistors , rectangular type |
| R2345 | ERJ3GEYJ332V | Surface mounting fixed metal glaze film ( thick film ) resistors , rectangular type |
| R2346 | ERJ3GEYJ332V | Surface mounting fixed metal glaze film ( thick film ) resistors , rectangular type |
| R2347 | ERJ3GEYJ332V | Surface mounting fixed metal glaze film ( thick film ) resistors , rectangular type |
| R2348 | D0GB103JA008 | SURFACE MOUNTING FIXED METAL GLAZE FILM ( THICK FILM ) RESISTORS , RECTANGULAR TYPE |
| R2349 | ERJ3GEYJ104V | Surface mounting fixed metal glaze film ( thick film ) resistors , rectangular type |
| R2350 | D0GB393JA008 | SURFACE MOUNTING FIXED METAL GLAZE FILM ( THICK FILM ) RESISTORS , RECTANGULAR TYPE |
| R2353 | D0GBR00JA008 | SURFACE MOUNTING FIXED METAL GLAZE FILM ( THICK FILM ) RESISTORS , RECTANGULAR TYPE |
| R2355 | ERJ3GEYJ123V | Surface mounting fixed metal glaze film ( thick film ) resistors , rectangular type |
| R2356 | ERJ3GEYJ102V | Surface mounting fixed metal glaze film ( thick film ) resistors , rectangular type |
| R2357 | ERJ3GEYJ475V | Surface mounting fixed metal glaze film ( thick film ) resistors , rectangular type |
| R2358 | ERJ3GEYJ103V | Surface mounting fixed metal glaze film ( thick film ) resistors , rectangular type |
| R2359 | ERJ3GEYJ102V | Surface mounting fixed metal glaze film ( thick film ) resistors , rectangular type |
| R2360 | ERJ3GEYJ104V | Surface mounting fixed metal glaze film ( thick film ) resistors , rectangular type |
| R2361 | ERJ3GEYJ103V | Surface mounting fixed metal glaze film ( thick film ) resistors , rectangular type |
| R2362 | ERJ3GEYJ474V | Surface mounting fixed metal glaze film ( thick film ) resistors , rectangular type |
| R2363 | ERJ3GEYJ333V | Surface mounting fixed metal glaze film ( thick film ) resistors , rectangular type |
| R2364 | ERJ3GEYJ222V | Surface mounting fixed metal glaze film ( thick film ) resistors , rectangular type |
| R2365 | ERJ3GEYJ102V | Surface mounting fixed metal glaze film ( thick film ) resistors , rectangular type |
| R2366 | ERJ3GEYJ102V | Surface mounting fixed metal glaze film ( thick film ) resistors , rectangular type |
| R2372 | ERJ3GEYJ102V | Surface mounting fixed metal glaze film ( thick film ) resistors , rectangular type |
| R2373 | D0GB154JA008 | SURFACE MOUNTING FIXED METAL GLAZE FILM ( THICK FILM ) RESISTORS , RECTANGULAR TYPE |
| R2374 | ERJ3GEYJ102V | Surface mounting fixed metal glaze film ( thick film ) resistors , rectangular type |
| R2375 | D0GB154JA008 | SURFACE MOUNTING FIXED METAL GLAZE FILM ( THICK FILM ) RESISTORS , RECTANGULAR TYPE |
| R2376 | ERJ3GEYJ102V | Surface mounting fixed metal glaze film ( thick film ) resistors , rectangular type |
| R2377 | D0GB102JA008 | SURFACE MOUNTING FIXED METAL GLAZE FILM ( THICK FILM ) RESISTORS , RECTANGULAR TYPE |
| R2379 | ERJ3GEYJ681V | Surface mounting fixed metal glaze film ( thick film ) resistors , rectangular type |
| R2380 | ERJ3GEY0R00V | SURFACE MOUNTING OTHER FIXED RESISTORS , RECTANGULAR TYPE ( JUMPER WIRE RESISTOR INCLUDED )1 |
| R2381 | D0GB123JA008 | SURFACE MOUNTING FIXED METAL GLAZE FILM ( THICK FILM ) RESISTORS , RECTANGULAR TYPE |
| R2386 | ERJ3GEYJ333V | Surface mounting fixed metal glaze film ( thick film ) resistors , rectangular type |
| R2390 | D0GB823JA008 | SURFACE MOUNTING FIXED METAL GLAZE FILM ( THICK FILM ) RESISTORS , RECTANGULAR TYPE |
| R2392 | D0AF270JA039 | FIXED CARBON FILM RESISTORS , LEAD TYPE |
| R2393 | D0GB274JA008 | SURFACE MOUNTING FIXED METAL GLAZE FILM ( THICK FILM ) RESISTORS , RECTANGULAR TYPE |
| R2394 | D0GB221JA008 | SURFACE MOUNTING FIXED METAL GLAZE FILM ( THICK FILM ) RESISTORS , RECTANGULAR TYPE |
| R2395 | D0GB104JA008 | SURFACE MOUNTING FIXED METAL GLAZE FILM ( THICK FILM ) RESISTORS , RECTANGULAR TYPE |
| R2396 | D0GB101JA008 | SURFACE MOUNTING FIXED METAL GLAZE FILM ( THICK FILM ) RESISTORS , RECTANGULAR TYPE |
| R2397 | D0GB474JA008 | SURFACE MOUNTING FIXED METAL GLAZE FILM ( THICK FILM ) RESISTORS , RECTANGULAR TYPE |
| R2398 | ERJ3GEY0R00V | SURFACE MOUNTING OTHER FIXED RESISTORS , RECTANGULAR TYPE ( JUMPER WIRE RESISTOR INCLUDED )1 |
| R2399 | ERJ3GEY0R00V | SURFACE MOUNTING OTHER FIXED RESISTORS , RECTANGULAR TYPE ( JUMPER WIRE RESISTOR INCLUDED )1 |
| R2400 | ERJ3GEY0R00V | SURFACE MOUNTING OTHER FIXED RESISTORS , RECTANGULAR TYPE ( JUMPER WIRE RESISTOR INCLUDED )1 |
| R2402 | ERJ3GEYJ273V | Surface mounting fixed metal glaze film ( thick film ) resistors , rectangular type |
| R2404 | ERJ3GEYJ223V | Surface mounting fixed metal glaze film ( thick film ) resistors , rectangular type |
| R2405 | ERJ3GEYJ333V | Surface mounting fixed metal glaze film ( thick film ) resistors , rectangular type |
| R2406 | ERJ3GEYJ473V | SURFACE MOUNTING FIXED METAL GLAZE FILM (THICK FILM) RESISTORS, RECTANGULAR TYPE |
| R2408 | ERJ3RBD102V | Surface mounting fixed metal glaze film ( thick film ) resistors , rectangular type |
| R2409 | ERJ3RBD272V | Surface mounting fixed metal glaze film ( thick film ) resistors , rectangular type |
| R2412 | D0GBR00JA008 | SURFACE MOUNTING FIXED METAL GLAZE FILM ( THICK FILM ) RESISTORS , RECTANGULAR TYPE |
| R2415 | D0GBR00JA008 | SURFACE MOUNTING FIXED METAL GLAZE FILM ( THICK FILM ) RESISTORS , RECTANGULAR TYPE |
| R2421 | ERJ3GEYJ153V | Surface mounting fixed metal glaze film ( thick film ) resistors , rectangular type |
| R2422 | ERJ3GEY0R00V | SURFACE MOUNTING OTHER FIXED RESISTORS , RECTANGULAR TYPE ( JUMPER WIRE RESISTOR INCLUDED )1 |
| R2424 | ERJ3RBD682V | Surface mounting fixed metal glaze film ( thick film ) resistors , rectangular type |
| R2425 | ERJ3GEYJ472V | Surface mounting fixed metal glaze film ( thick film ) resistors , rectangular type |
| R2426 | ERJ3GEYJ683V | Surface mounting fixed metal glaze film ( thick film ) resistors , rectangular type |
| R2427 | ERJ3GEYJ683V | Surface mounting fixed metal glaze film ( thick film ) resistors , rectangular type |
| R2429 | ERJ3GEYJ105V | Surface mounting fixed metal glaze film ( thick film ) resistors , rectangular type |
| R2431 | D0GFR00JA017 | SURFACE MOUNTING FIXED METAL GLAZE FILM ( THICK FILM ) RESISTORS , RECTANGULAR TYPE |

| | | |
|---|---|---|
| R2432 | ERJ3GEY0R00V | SURFACE MOUNTING OTHER FIXED RESISTORS , RECTANGULAR TYPE ( JUMPER WIRE RESISTOR INCLUDED )1 |
| R2434 | D0GB472JA008 | SURFACE MOUNTING FIXED METAL GLAZE FILM ( THICK FILM ) RESISTORS , RECTANGULAR TYPE |
| R2435 | D0GB182JA008 | SURFACE MOUNTING FIXED METAL GLAZE FILM ( THICK FILM ) RESISTORS , RECTANGULAR TYPE |
| R2436 | D0GB273JA008 | SURFACE MOUNTING FIXED METAL GLAZE FILM ( THICK FILM ) RESISTORS , RECTANGULAR TYPE |
| R2438 | D0GB472JA008 | SURFACE MOUNTING FIXED METAL GLAZE FILM ( THICK FILM ) RESISTORS , RECTANGULAR TYPE |
| R2439 | D0GB273JA008 | SURFACE MOUNTING FIXED METAL GLAZE FILM ( THICK FILM ) RESISTORS , RECTANGULAR TYPE |
| R2440 | D0GB182JA008 | SURFACE MOUNTING FIXED METAL GLAZE FILM ( THICK FILM ) RESISTORS , RECTANGULAR TYPE |
| R2442 | ERJ3GEYJ473V | SURFACE MOUNTING FIXED METAL GLAZE FILM (THICK FILM) RESISTORS, RECTANGULAR TYPE |
| R2443 | ERJ3GEYJ331V | Surface mounting fixed metal glaze film ( thick film ) resistors , rectangular type |
| R5601 | ERJ3GEYJ220V | Surface mounting fixed metal glaze film ( thick film ) resistors , rectangular type |
| R5602 | ERJ3GEYJ105V | Surface mounting fixed metal glaze film ( thick film ) resistors , rectangular type |
| R5603 | ERJ3GEYJ105V | Surface mounting fixed metal glaze film ( thick film ) resistors , rectangular type |
| R5605 | ERJ3GEY0R00V | SURFACE MOUNTING OTHER FIXED RESISTORS , RECTANGULAR TYPE ( JUMPER WIRE RESISTOR INCLUDED )1 |
| R5606 | ERJ3GEYJ105V | Surface mounting fixed metal glaze film ( thick film ) resistors , rectangular type |
| R5607 | ERJ3GEYJ101V | Surface mounting fixed metal glaze film ( thick film ) resistors , rectangular type |
| R5608 | ERJ3GEY0R00V | SURFACE MOUNTING OTHER FIXED RESISTORS , RECTANGULAR TYPE ( JUMPER WIRE RESISTOR INCLUDED )1 |
| R5609 | ERG2SJ102E | Fixed metal oxide film resistors , lead type |
| R5610 | ERJ3GEY0R00V | SURFACE MOUNTING OTHER FIXED RESISTORS , RECTANGULAR TYPE ( JUMPER WIRE RESISTOR INCLUDED )1 |
| R5611 | ERJ3GEYJ103V | Surface mounting fixed metal glaze film ( thick film ) resistors , rectangular type |
| R5612 | ERJ3GEYJ103V | Surface mounting fixed metal glaze film ( thick film ) resistors , rectangular type |
| R5613 | ERJ3GEYJ103V | Surface mounting fixed metal glaze film ( thick film ) resistors , rectangular type |
| R5614 | D0GB122JA008 | SURFACE MOUNTING FIXED METAL GLAZE FILM ( THICK FILM ) RESISTORS , RECTANGULAR TYPE |
| R5615 | D0GB122JA008 | SURFACE MOUNTING FIXED METAL GLAZE FILM ( THICK FILM ) RESISTORS , RECTANGULAR TYPE |
| R5616 | ERJ3GEYJ103V | Surface mounting fixed metal glaze film ( thick film ) resistors , rectangular type |
| R5617 | ERJ3GEYJ822V | Surface mounting fixed metal glaze film ( thick film ) resistors , rectangular type |
| R5618 | ERJ3GEYJ104V | Surface mounting fixed metal glaze film ( thick film ) resistors , rectangular type |
| R5619 | ERJ3GEYJ154V | Surface mounting fixed metal glaze film ( thick film ) resistors , rectangular type |
| R5621 | ERJ3GEYJ104V | Surface mounting fixed metal glaze film ( thick film ) resistors , rectangular type |
| R5622 | ERJ3GEYJ154V | Surface mounting fixed metal glaze film ( thick film ) resistors , rectangular type |
| R5629 | D0YRR0000001 | SURFACE MOUNTING OTHER FIXED RESISTORS , RECTANGULAR TYPE ( JUMPER WIRE RESISTOR INCLUDED ) |
| R5630 | D0YRR0000001 | SURFACE MOUNTING OTHER FIXED RESISTORS , RECTANGULAR TYPE ( JUMPER WIRE RESISTOR INCLUDED ) |
| R5631 | D0YRR0000001 | SURFACE MOUNTING OTHER FIXED RESISTORS , RECTANGULAR TYPE ( JUMPER WIRE RESISTOR INCLUDED ) |
| R5632 | D0YRR0000001 | SURFACE MOUNTING OTHER FIXED RESISTORS , RECTANGULAR TYPE ( JUMPER WIRE RESISTOR INCLUDED ) |
| R5633 | D0YRR0000001 | SURFACE MOUNTING OTHER FIXED RESISTORS , RECTANGULAR TYPE ( JUMPER WIRE RESISTOR INCLUDED ) |
| R5634 | D0YRR0000001 | SURFACE MOUNTING OTHER FIXED RESISTORS , RECTANGULAR TYPE ( JUMPER WIRE RESISTOR INCLUDED ) |
| R5635 | D0YRR0000001 | SURFACE MOUNTING OTHER FIXED RESISTORS , RECTANGULAR TYPE ( JUMPER WIRE RESISTOR INCLUDED ) |
| R5700 | ERJ3GEYJ562V | Surface mounting fixed metal glaze film ( thick film ) resistors , rectangular type |
| R5701 | ERJ3GEYJ562V | Surface mounting fixed metal glaze film ( thick film ) resistors , rectangular type |
| R5702 | D0GF100JA014 | SURFACE MOUNTING FIXED METAL GLAZE FILM ( THICK FILM ) RESISTORS , RECTANGULAR TYPE |
| R5703 | D0GF100JA014 | SURFACE MOUNTING FIXED METAL GLAZE FILM ( THICK FILM ) RESISTORS , RECTANGULAR TYPE |
| R5704 | D0GF100JA014 | SURFACE MOUNTING FIXED METAL GLAZE FILM ( THICK FILM ) RESISTORS , RECTANGULAR TYPE |
| R5705 | D0GF100JA014 | SURFACE MOUNTING FIXED METAL GLAZE FILM ( THICK FILM ) RESISTORS , RECTANGULAR TYPE |
| R5706 | ERJ3GEYJ562V | Surface mounting fixed metal glaze film ( thick film ) resistors , rectangular type |
| R5707 | ERJ3GEYJ562V | Surface mounting fixed metal glaze film ( thick film ) resistors , rectangular type |
| R5708 | ERJ3GEYJ101V | Surface mounting fixed metal glaze film ( thick film ) resistors , rectangular type |
| R5709 | D0GZ220JA012 | SURFACE MOUNTING FIXED RESISTORS , RECTANGULAR TYPE |
| R5710 | D0GZ220JA012 | SURFACE MOUNTING FIXED RESISTORS , RECTANGULAR TYPE |
| R5711 | ERJ3GEYJ562V | Surface mounting fixed metal glaze film ( thick film ) resistors , rectangular type |
| R5712 | ERJ3GEYJ562V | Surface mounting fixed metal glaze film ( thick film ) resistors , rectangular type |
| R5800 | ERJ3GEYJ562V | Surface mounting fixed metal glaze film ( thick film ) resistors , rectangular type |
| R5801 | ERJ3GEYJ562V | Surface mounting fixed metal glaze film ( thick film ) resistors , rectangular type |
| R5802 | D0GF100JA014 | SURFACE MOUNTING FIXED METAL GLAZE FILM ( THICK FILM ) RESISTORS , RECTANGULAR TYPE |
| R5803 | D0GF100JA014 | SURFACE MOUNTING FIXED METAL GLAZE FILM ( THICK FILM ) RESISTORS , RECTANGULAR TYPE |
| R5804 | D0GF100JA014 | SURFACE MOUNTING FIXED METAL GLAZE FILM ( THICK FILM ) RESISTORS , RECTANGULAR TYPE |
| R5805 | D0GF100JA014 | SURFACE MOUNTING FIXED METAL GLAZE FILM ( THICK FILM ) RESISTORS , RECTANGULAR TYPE |
| R5806 | ERJ3GEYJ562V | Surface mounting fixed metal glaze film ( thick film ) resistors , rectangular type |
| R5807 | ERJ3GEYJ562V | Surface mounting fixed metal glaze film ( thick film ) resistors , rectangular type |
| R5808 | ERJ3GEYJ101V | Surface mounting fixed metal glaze film ( thick film ) resistors , rectangular type |
| R5809 | D0GZ220JA012 | SURFACE MOUNTING FIXED RESISTORS , RECTANGULAR TYPE |
| R5810 | D0GZ220JA012 | SURFACE MOUNTING FIXED RESISTORS , RECTANGULAR TYPE |
| R5811 | ERJ3GEYJ562V | Surface mounting fixed metal glaze film ( thick film ) resistors , rectangular type |
| R5812 | ERJ3GEYJ562V | Surface mounting fixed metal glaze film ( thick film ) resistors , rectangular type |
| VA51 | EZAEG2A50AX | OTHER FILTERS |
| X51 | H0A327200181 | CRYSTAL RESONATORS ,LEAD TYPE |
| X2000 | H0A327200181 | CRYSTAL RESONATORS ,LEAD TYPE |
| X2001 | H2B800400007 | Piezo-ceramic resonators with built-in capacitors , lead type |
| X5601 | H2A6023A0011 | PIEZO-CERAMIC RESONATORS , LEAD TYPE |
| X5602 | H2A7003A0011 | PIEZO-CERAMIC RESONATORS , LEAD TYPE |
| ZA10 | RMCX0035 | HEAT SINK CLIP A |
| ZA11 | RMY0418A | HEATSINK BIG |
| ZA12 | RMCX0035 | HEAT SINK CLIP A |
| ZJ2000 | K9ZZ00001279 | TAPING EARTH FITTING |
| ZJ2001 | REX1531 | 6P FLAT WIRE MAIN TO MAIN PCB |
| ZJ2007 | REX1527 | 15P FLAT WIRE SMPS TO MAIN |

## 17.4. Panel, Remote Sensor, USB and Music Port P.C.B.

### C PANEL P.C.B. (REPM12X743A)

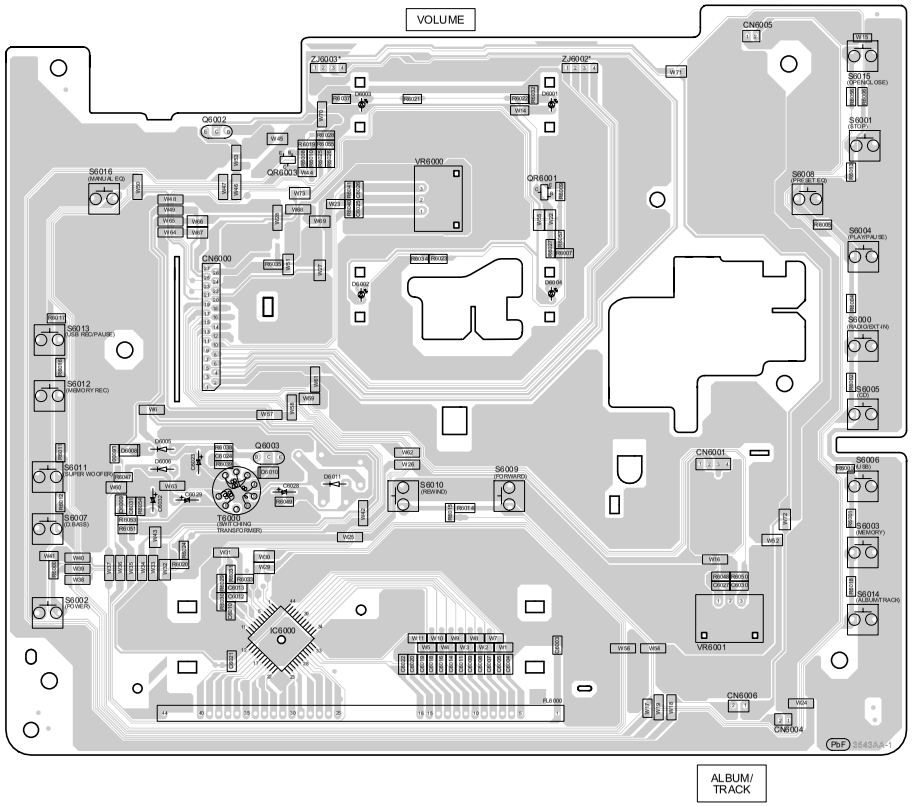


### D REMOTE SENSOR P.C.B. (REPM12X743A)

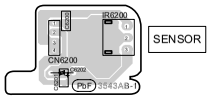


### E USB P.C.B. (REPM12X743A)

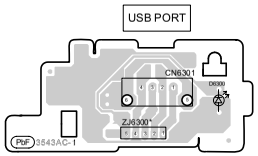


### F MUSIC PORT P.C.B. (REPM12X743A)

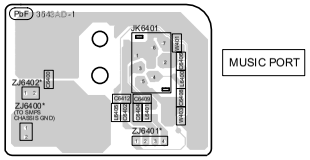


Nota:
Para el valor y clave de cada componente referirse a; "Lista de partes Eléctricas" a partir de la página 134.

NOTE: " * " REF IS FOR INDICATION ONLY.

SA-AKX74
PANEL / REMOTE SENSOR / USB / MUSIC PORT P.C.B.

## 17.5. Memory LED, CD Interface, Top Bar LED, Bottom Bar LED and Mic P.C.B.

### G MEMORY LED P.C.B.

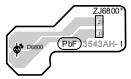


### H CD INTERFACE P.C.B.

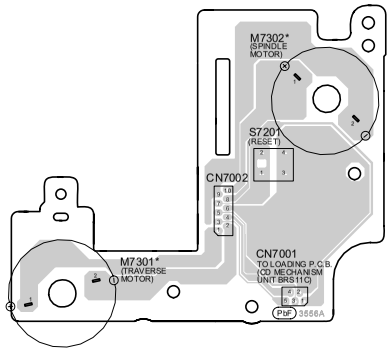


### I TOP BAR LED P.C.B.

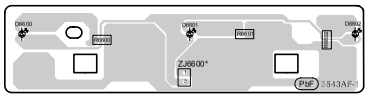


### J BOTTOM BAR LED P.C.B.

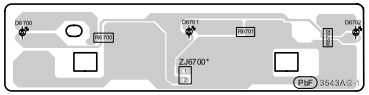


### K MIC P.C.B.

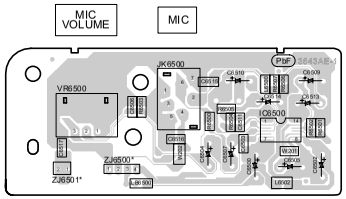


Nota:
Para el valor y clave de cada componente referirse a; "Lista de partes Eléctricas" a partir de la página 134.

NOTE: " * " REF IS FOR INDICATION ONLY.

SA-AKX74
MEMORY LED / CD INTERFACE / TOP BAR LED / BOTTOM BAR LED / MIC P.C.B.

## 17.7. SMPS and D-Amp P.C.B.

**M** SMPS P.C.B. (REPM12X740A)

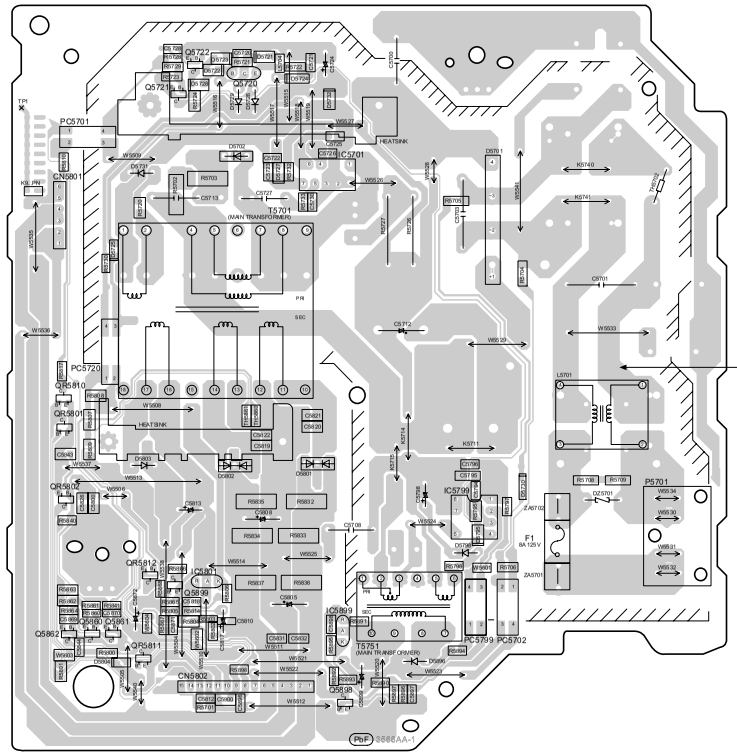


CAUTION
RISK OF ELECTRIC SHOCK
AC VOLTAGE LINE.
PLEASE DO NOT TOUCH THIS P.C.B

AC IN ~
120V 60Hz

**L** D-AMP P.C.B. (REPM12X741A)

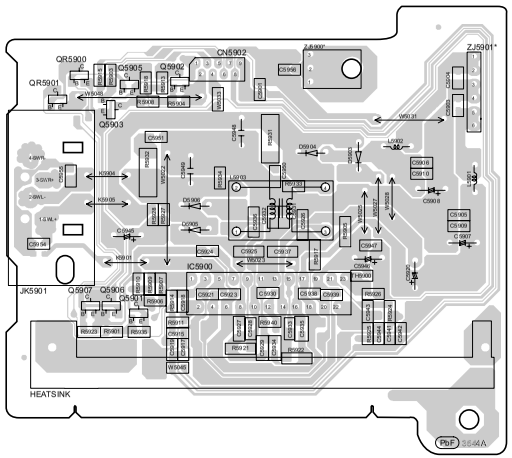


TO SPEAKER
(SUBWOOFER)

Nota:
Para el valor y clave de cada componente referirse a; "Lista de partes Eléctricas" a partir de la página 134.

NOTE: " * " REF IS FOR INDICATION ONLY.

SA-AKX74
SMPS / D-AMP P.C.B.

# 18 Appendix Information of Schematic Diagram

## 18.1. Voltage & Waveform Chart

**Note:**

- Indication Voltage Values are in standard values for the unit measured by the DC electronic circuit tester (high-impedance) with the chassis taken as standard.
  Therefore, there may exist some errors in voltage values, depending on the internal impedance of the DC circuit tester.
- Circuit voltage and waveform described herein shall be regarded as reference information when probing defect point because it may differ from actual measuring value due to difference of Measuring instrument and its measuring condition and product itself.

### 18.1.1. CD Servo P.C.B. (1/3)

| REF NO. | IC8001 | | | | | | | | | | | | | | | | | | | |
|---|---|---|---|---|---|---|---|---|---|---|---|---|---|---|---|---|---|---|---|---|
| MODE | 1 | 2 | 3 | 4 | 5 | 6 | 7 | 8 | 9 | 10 | 11 | 12 | 13 | 14 | 15 | 16 | 17 | 18 | 19 | 20 |
| CD PLAY | 3.2 | 1.4 | 1.4 | 0.7 | 0.7 | 1.2 | 3.3 | 1.2 | 0 | 3.3 | 3.2 | 3.3 | 0 | 0.1 | 1.8 | 1.8 | 1.7 | 3.3 | 0 | 1.7 |

| REF NO. | IC8001 | | | | | | | | | | | | | | | | | | | |
|---|---|---|---|---|---|---|---|---|---|---|---|---|---|---|---|---|---|---|---|---|
| MODE | 21 | 22 | 23 | 24 | 25 | 26 | 27 | 28 | 29 | 30 | 31 | 32 | 33 | 34 | 35 | 36 | 37 | 38 | 39 | 40 |
| CD PLAY | 1.7 | 1.7 | 1.7 | 0 | 3.3 | 3.3 | 1.5 | 3.3 | 3.3 | 2.5 | 8 | 3.3 | 0.7 | 3.2 | 3.3 | 0 | 3.3 | 3.3 | 3.3 | 3.3 |

| REF NO. | IC8001 | | | | | | | | | | | | | | | | | | | |
|---|---|---|---|---|---|---|---|---|---|---|---|---|---|---|---|---|---|---|---|---|
| MODE | 41 | 42 | 43 | 44 | 45 | 46 | 47 | 48 | 49 | 50 | 51 | 52 | 53 | 54 | 55 | 56 | 57 | 58 | 59 | 60 |
| CD PLAY | 3.3 | 3.3 | 0 | 3.3 | 3.3 | 0 | 1.2 | 1.7 | 1.7 | 1.5 | 1.6 | 0 | 1.7 | 1.7 | 2 | 2 | 1.8 | 1.9 | 1.9 | 1.8 |

| REF NO. | IC8001 | | | | | | | | | | | | | | | | | | | |
|---|---|---|---|---|---|---|---|---|---|---|---|---|---|---|---|---|---|---|---|---|
| MODE | 61 | 62 | 63 | 64 | 65 | 66 | 67 | 68 | 69 | 70 | 71 | 72 | 73 | 74 | 75 | 76 | 77 | 78 | 79 | 80 |
| CD PLAY | 0.2 | 2.4 | 0 | 3.3 | 1.7 | 1.7 | 1 | 1 | 1 | 1.2 | 1.3 | 1.7 | 1.7 | 1.4 | 1.4 | 0.5 | 0 | 3.3 | 3.3 | 0.9 |

| REF NO. | IC8001 | | | | | | | | | | | | | | | | | | | |
|---|---|---|---|---|---|---|---|---|---|---|---|---|---|---|---|---|---|---|---|---|
| MODE | 81 | 82 | 83 | 84 | 85 | 86 | 87 | 88 | 89 | 90 | 91 | 92 | 93 | 94 | 95 | 96 | 97 | 98 | 99 | 100 |
| CD PLAY | 0 | 0 | 0 | 0 | 0 | 0 | 1.2 | 3.2 | 1.5 | 0 | 0 | 3.3 | 0 | 1.7 | 1.7 | 1.2 | 3.3 | 0 | 0 | 0 |

| REF NO. | IC8001 | | | | | | | | | | | | | | | | | | | |
|---|---|---|---|---|---|---|---|---|---|---|---|---|---|---|---|---|---|---|---|---|
| MODE | 101 | 102 | 103 | 104 | 105 | 106 | 107 | 108 | 109 | 110 | 111 | 112 | 113 | 114 | 115 | 116 | 117 | 118 | 119 | 120 |
| CD PLAY | 1.2 | 0 | 3.3 | 3.3 | 3.2 | 3.3 | 3.3 | 3.3 | 1.5 | 1.5 | 1.32 | 3.3 | 3.3 | 0 | 1.3 | 1.3 | 1.3 | 1.3 | 3.3 | 3.3 |

| REF NO. | IC8001 | | | | | | | | | | | | | | | | | | | |
|---|---|---|---|---|---|---|---|---|---|---|---|---|---|---|---|---|---|---|---|---|
| MODE | 121 | 122 | 123 | 124 | 125 | 126 | 127 | 128 | 129 | 130 | 131 | 132 | 133 | 134 | 135 | 136 | 137 | 138 | 139 | 140 |
| CD PLAY | 1.2 | 0 | 0 | 3.3 | 0 | 0 | 0 | 3.3 | 0 | 0 | 3.3 | 0 | 3.2 | 3.2 | 0 | 0.8 | 0.8 | 1.6 | 0 | 0 |

| REF NO. | IC8001 | | | | | | | | | | | | | | | | | | | |
|---|---|---|---|---|---|---|---|---|---|---|---|---|---|---|---|---|---|---|---|---|
| MODE | 141 | 142 | 143 | 144 | | | | | | | | | | | | | | | | |
| CD PLAY | 0 | 1.2 | 1.4 | 0.7 | | | | | | | | | | | | | | | | |

| REF NO. | IC8051 | | | | | | | | | | | | | | | | | | | |
|---|---|---|---|---|---|---|---|---|---|---|---|---|---|---|---|---|---|---|---|---|
| MODE | 1 | 2 | 3 | 4 | 5 | 6 | 7 | 8 | 9 | 10 | 11 | 12 | 13 | 14 | 15 | 16 | 17 | 18 | 19 | 20 |
| CD PLAY | 3.3 | 0.7 | 3.3 | 0.7 | 1.4 | 0 | 1.4 | 0.7 | 3.3 | 1.4 | 1.4 | 0 | 1.4 | 3.3 | 3.3 | 3.3 | 3.3 | 3.3 | 0 | 0 |

| REF NO. | IC8051 | | | | | | | | | | | | | | | | | | | |
|---|---|---|---|---|---|---|---|---|---|---|---|---|---|---|---|---|---|---|---|---|
| MODE | 21 | 22 | 23 | 24 | 25 | 26 | 27 | 28 | 29 | 30 | 31 | 32 | 33 | 34 | 35 | 36 | 37 | 38 | 39 | 40 |
| CD PLAY | 0 | 0 | 0.1 | 1.8 | 1.8 | 1.7 | 3.3 | 0 | 1.7 | 1.7 | 1.7 | 1.7 | 0 | 3.3 | 3.3 | 0 | 3.3 | 1.5 | 3.3 | 0 |

| REF NO. | IC8051 | | | | | | | | | | | | | | | | | | | |
|---|---|---|---|---|---|---|---|---|---|---|---|---|---|---|---|---|---|---|---|---|
| MODE | 41 | 42 | 43 | 44 | 45 | 46 | 47 | 48 | 49 | 50 | 51 | 52 | 53 | 54 | | | | | | |
| CD PLAY | 0 | 0.6 | 3.3 | 1.2 | 1.2 | 0 | 1.2 | 0.6 | 3.3 | 1.2 | 1.2 | 0 | 1.2 | 0 | | | | | | |

| REF NO. | IC8251 | | | | | | | | | | | | | | | | | | | |
|---|---|---|---|---|---|---|---|---|---|---|---|---|---|---|---|---|---|---|---|---|
| MODE | 1 | 2 | 3 | 4 | 5 | 6 | 7 | 8 | 9 | 10 | 11 | 12 | 13 | 14 | 15 | 16 | 17 | 18 | 19 | 20 |
| CD PLAY | 1.6 | 9.1 | 2.5 | 1.6 | 2.4 | 3 | 3 | 9 | 0 | 0 | 4.6 | 4.6 | 2.6 | 2.7 | 2.6 | 2.7 | 2 | 3.1 | 5 | 0 |

**SA-AKX74 CD SERVO P.C.B.**

## 18.1.2. CD Servo P.C.B. (2/3)

| REF NO. | IC8251 | | | | | | | | | | | | | | | | | | | |
|---|---|---|---|---|---|---|---|---|---|---|---|---|---|---|---|---|---|---|---|---|
| MODE | 21 | 22 | 23 | 24 | 25 | 26 | 27 | 28 | 29 | 30 | | | | | | | | | | |
| CD PLAY | 1.5 | 0 | 1.5 | 9.3 | 9.3 | 1.7 | 1.7 | 3.3 | 0 | 0 | | | | | | | | | | |

| REF NO. | IC8301 | | | | | | | | | | | | | | | | | | | |
|---|---|---|---|---|---|---|---|---|---|---|---|---|---|---|---|---|---|---|---|---|
| MODE | 1 | 2 | 3 | 4 | 5 | 6 | 7 | 8 | 9 | 10 | 11 | 12 | 13 | 14 | 15 | 16 | | | | |
| CD PLAY | 2.3 | 1.5 | 0 | 0 | 0 | 5 | 3.2 | 0 | 0 | 0.9 | 0.9 | 0.9 | 0 | 3.3 | 0 | 0 | | | | |

| REF NO. | IC8401 | | | | | | | | | | | | | | | | | | | |
|---|---|---|---|---|---|---|---|---|---|---|---|---|---|---|---|---|---|---|---|---|
| MODE | 1 | 2 | 3 | 4 | 5 | 6 | 7 | 8 | | | | | | | | | | | | |
| CD PLAY | 1.8 | 2.5 | 3.3 | 0 | 3.2 | 0.8 | 3.3 | 3.3 | | | | | | | | | | | | |

| REF NO. | IC8501 | | | | | | | | | | | | | | | | | | | |
|---|---|---|---|---|---|---|---|---|---|---|---|---|---|---|---|---|---|---|---|---|
| MODE | 1 | 2 | 3 | 4 | 5 | 6 | 7 | 8 | 9 | 10 | 11 | 12 | 13 | 14 | 15 | 16 | 17 | 18 | 19 | 20 |
| CD PLAY | 0 | 0 | 0 | 0 | 0 | 0 | 0 | 0 | 0 | 0 | 3.0 | 3.0 | 3.0 | 0 | 0 | 3.0 | 0 | 0 | 0 | 0 |

| REF NO. | IC8501 | | | | | | | | | | | | | | | | | | | |
|---|---|---|---|---|---|---|---|---|---|---|---|---|---|---|---|---|---|---|---|---|
| MODE | 21 | 22 | 23 | 24 | 25 | 26 | 27 | 28 | 29 | 30 | 31 | 32 | 33 | 34 | 35 | 36 | 37 | 38 | 39 | 40 |
| CD PLAY | 0 | 0 | 0 | 0 | 0 | 0 | 0 | 0 | 0 | 3.0 | 0 | 0 | 0 | 0 | 0 | 0 | 3.0 | 3.0 | 0 | 0 |

| REF NO. | IC8501 | | | | | | | | | | | | | | | | | | | |
|---|---|---|---|---|---|---|---|---|---|---|---|---|---|---|---|---|---|---|---|---|
| MODE | 41 | 42 | 43 | 44 | 45 | 46 | 47 | 48 | 49 | 50 | 51 | 52 | 53 | 54 | 55 | 56 | 57 | 58 | 59 | 60 |
| CD PLAY | 0 | 3.0 | 3.0 | 3.0 | 0 | 0 | 0 | 0 | 0 | 0 | 0 | 0 | 0 | 0 | 0 | 0 | 0 | 0 | 0 | 0 |

| REF NO. | IC8501 | | | | | | | | | | | | | | | | | | | |
|---|---|---|---|---|---|---|---|---|---|---|---|---|---|---|---|---|---|---|---|---|
| MODE | 61 | 62 | 63 | 64 | 65 | 66 | 67 | 68 | 69 | 70 | 71 | 72 | 73 | 74 | 75 | 76 | 77 | 78 | 79 | 80 |
| CD PLAY | 0 | 3.0 | 0 | 0 | 0 | 0 | 0 | 0 | 0 | 3.0 | 3.0 | 3.0 | 3.0 | 0 | 0 | 0 | 0 | 0 | 0 | 0 |

| REF NO. | IC8501 | | | | | | | | | | | | | | | | | | | |
|---|---|---|---|---|---|---|---|---|---|---|---|---|---|---|---|---|---|---|---|---|
| MODE | 81 | 82 | 83 | 84 | 85 | 86 | 87 | 88 | 89 | 90 | 91 | 92 | 93 | 94 | 95 | 96 | 97 | 98 | 99 | 100 |
| CD PLAY | 0 | 0 | 0 | 0 | 0 | 0 | 0 | 0 | 0 | 0 | 0 | 0 | 0 | 3.0 | 3.0 | 3.0 | 3.0 | 3.0 | 3.0 | 3.0 |

| REF NO. | IC8501 | | | | | | | | | | | | | | | | | | | |
|---|---|---|---|---|---|---|---|---|---|---|---|---|---|---|---|---|---|---|---|---|
| MODE | 101 | 102 | 103 | 104 | 105 | 106 | 107 | 108 | 109 | 110 | 111 | 112 | 113 | 114 | 115 | 116 | 117 | 118 | 119 | 120 |
| CD PLAY | 3.0 | 3.0 | 3.0 | 3.0 | 3.0 | 3.0 | 0 | 0 | 3.0 | 0 | 0 | 0 | 0 | 3.0 | 3.0 | 3.0 | 0 | 0 | 0 | 0 |

| REF NO. | IC8501 | | | | | | | | | | | | | | | | | | | |
|---|---|---|---|---|---|---|---|---|---|---|---|---|---|---|---|---|---|---|---|---|
| MODE | 121 | 122 | 123 | 124 | 125 | 126 | 127 | 128 | 129 | 130 | 131 | 132 | 133 | 134 | 135 | 136 | 137 | 138 | 139 | 140 |
| CD PLAY | 0 | 0 | 3.0 | 3.0 | 3.0 | 0 | 0 | 0 | 0 | 3.0 | 0 | 0 | 0 | 0 | 0 | 3.0 | 3.0 | 0 | 0 | 0 |

| REF NO. | IC8501 | | | | | | | | | | | | | | | | | | | |
|---|---|---|---|---|---|---|---|---|---|---|---|---|---|---|---|---|---|---|---|---|
| MODE | 141 | 142 | 143 | 144 | 145 | 146 | 147 | 148 | 149 | 150 | 151 | 152 | 153 | 154 | 155 | 156 | 157 | 158 | 159 | 160 |
| CD PLAY | 0 | 0 | 0 | 3.0 | 0 | 0 | 0 | 0 | 0 | 3.0 | 0 | 3.0 | 0 | 0 | 0 | 0 | 0 | 3.0 | 0 | 0 |

| REF NO. | IC8501 | | | | | | | | | | | | | | | | | | | |
|---|---|---|---|---|---|---|---|---|---|---|---|---|---|---|---|---|---|---|---|---|
| MODE | 161 | 162 | 163 | 164 | 165 | 166 | 167 | 168 | 169 | | | | | | | | | | | |
| CD PLAY | 0 | 0 | 0 | 0 | 0 | 0 | 0 | 0 | 0 | | | | | | | | | | | |

**SA-AKX74 CD SERVO P.C.B.**

## 18.1.3. CD Servo P.C.B. (3/3)

| REF NO. | Q8201 | | | | | | | | | | | | | | | | | | | |
|---|---|---|---|---|---|---|---|---|---|---|---|---|---|---|---|---|---|---|---|---|
| MODE | E | C | B | | | | | | | | | | | | | | | | | |
| CD PLAY | 2.4 | 2 | 3 | | | | | | | | | | | | | | | | | |

**SA-AKX74 CD SERVO P.C.B.**

## 18.1.4. Main P.C.B. (1/4)

| REF NO. | IC52 | | | | | | | | | | | | | | | | | | | |
|---|---|---|---|---|---|---|---|---|---|---|---|---|---|---|---|---|---|---|---|---|
| MODE | 1 | 2 | 3 | 4 | 5 | 6 | 7 | 8 | 9 | 10 | 11 | 12 | 13 | 14 | 15 | 16 | 17 | 18 | 19 | 20 |
| TUNER | 0 | 1.5 | 0 | 3.0 | 3.0 | 0 | 3.0 | 3.3 | 3.3 | 3.3 | 3.3 | 0 | 1.4 | 0.3 | 0 | 0 | 3.3 | 3.0 | 0 | 0 |

| REF NO. | IC2000 | | | | | | | | | | | | | | | | | | | |
|---|---|---|---|---|---|---|---|---|---|---|---|---|---|---|---|---|---|---|---|---|
| MODE | 1 | 2 | 3 | 4 | 5 | 6 | 7 | 8 | 9 | 10 | 11 | 12 | 13 | 14 | 15 | 16 | 17 | 18 | 19 | 20 |
| POWER ON | 0 | 3.1 | 2.0 | 0 | 4.4 | 4.4 | 4.4 | 4.4 | 4.4 | 4.4 | 4.4 | 4.4 | 4.4 | 4.4 | 4.4 | 4.4 | 0 | 0 | 3.3 | 3.3 |
| STANDBY | 0 | 0 | 0 | 0 | 4.4 | 4.4 | 4.4 | 4.4 | 4.4 | 4.4 | 4.4 | 4.4 | 4.4 | 4.4 | 4.4 | 4.4 | 0 | 0 | 3.3 | 3.3 |

| REF NO. | IC2000 | | | | | | | | | | | | | | | | | | | |
|---|---|---|---|---|---|---|---|---|---|---|---|---|---|---|---|---|---|---|---|---|
| MODE | 21 | 22 | 23 | 24 | 25 | 26 | 27 | 28 | 29 | 30 | 31 | 32 | 33 | 34 | 35 | 36 | 37 | 38 | 39 | 40 |
| POWER ON | 8.6 | 0 | 0.2 | 0 | 0.7 | 4.4 | 4.4 | 0.3 | 4.2 | 4.2 | 4.2 | 4.2 | 4.3 | 4.4 | 4.4 | 0 | 2.0 | 3.1 | 0 | 0 |
| STANDBY | 8.6 | 0 | 0.2 | 0 | 0.7 | 4.4 | 4.4 | 0.3 | 4.2 | 4.2 | 4.2 | 4.2 | 4.3 | 4.4 | 4.4 | 0 | 0 | 0 | 0 | 0 |

| REF NO. | IC2000 | | | | | | | | | | | | | | | | | | | |
|---|---|---|---|---|---|---|---|---|---|---|---|---|---|---|---|---|---|---|---|---|
| MODE | 41 | 42 | 43 | 44 | 45 | 46 | 47 | 48 | 49 | 50 | 51 | 52 | | | | | | | | |
| POWER ON | 0 | 3.0 | 0 | 4.0 | 0 | 4.3 | 4.0 | 0 | 0 | 3.0 | 0 | 0 | | | | | | | | |
| STANDBY | 0 | 0 | 0 | 0 | 0 | 4.3 | 0 | 0 | 0 | 0 | 0 | 0 | | | | | | | | |

| REF NO. | IC2001 | | | | | | | | | | | | | | | | | | | |
|---|---|---|---|---|---|---|---|---|---|---|---|---|---|---|---|---|---|---|---|---|
| MODE | 1 | 2 | 3 | 4 | 5 | 6 | 7 | 8 | | | | | | | | | | | | |
| POWER ON | 8.0 | 0 | 8.0 | 0 | 8.0 | 0 | 8.0 | 16.0 | | | | | | | | | | | | |
| STANDBY | 8.0 | 0 | 8.0 | 0 | 8.0 | 0 | 8.0 | 16.0 | | | | | | | | | | | | |

| REF NO. | IC2002 | | | | | | | | | | | | | | | | | | | |
|---|---|---|---|---|---|---|---|---|---|---|---|---|---|---|---|---|---|---|---|---|
| MODE | 1 | 2 | 3 | 4 | 5 | 6 | 7 | 8 | | | | | | | | | | | | |
| POWER ON | 4.3 | 4.3 | 4.3 | 0 | 4.3 | 4.3 | 4.3 | 8.6 | | | | | | | | | | | | |
| STANDBY | 4.3 | 4.3 | 4.3 | 0 | 4.3 | 4.3 | 4.3 | 8.6 | | | | | | | | | | | | |

| REF NO. | IC2003 | | | | | | | | | | | | | | | | | | | |
|---|---|---|---|---|---|---|---|---|---|---|---|---|---|---|---|---|---|---|---|---|
| MODE | 1 | 2 | 3 | 4 | 5 | 6 | 7 | 8 | 9 | 10 | 11 | 12 | 13 | 14 | 15 | 16 | 17 | 18 | 19 | 20 |
| POWER ON | 0 | 3.3 | 3.3 | 0 | 0 | 0 | 1.2 | 0 | 3.3 | 3.3 | 0 | 1.5 | 1.6 | 0 | 1.1 | 1.7 | 3.3 | 1.8 | 3.2 | 3.2 |
| STANDBY | 0 | 3.3 | 3.3 | 0 | 0 | 0 | 1.2 | 0 | 3.3 | 3.3 | 0 | 1.5 | 1.6 | 0 | 1.1 | 1.7 | 3.3 | 1.8 | 3.2 | 0 |

| REF NO. | IC2003 | | | | | | | | | | | | | | | | | | | |
|---|---|---|---|---|---|---|---|---|---|---|---|---|---|---|---|---|---|---|---|---|
| MODE | 21 | 22 | 23 | 24 | 25 | 26 | 27 | 28 | 29 | 30 | 31 | 32 | 33 | 34 | 35 | 36 | 37 | 38 | 39 | 40 |
| POWER ON | 3.2 | 3.2 | 3.3 | 0 | 3.0 | 0 | 1.9 | 3.3 | 0 | 3.3 | 0 | 0 | 0 | 0 | 0 | 1.7 | 1.8 | 0 | 0 | 0 |
| STANDBY | 0 | 3.2 | 3.3 | 0 | 3.0 | 0 | 1.9 | 3.3 | 0 | 3.3 | 0 | 0 | 0 | 0 | 0 | 1.7 | 1.8 | 0 | 0 | 0 |

| REF NO. | IC2003 | | | | | | | | | | | | | | | | | | | |
|---|---|---|---|---|---|---|---|---|---|---|---|---|---|---|---|---|---|---|---|---|
| MODE | 41 | 42 | 43 | 44 | 45 | 46 | 47 | 48 | 49 | 50 | 51 | 52 | 53 | 54 | 55 | 56 | 57 | 58 | 59 | 60 |
| POWER ON | 0 | 0 | 3.0 | 0 | 0 | 0 | 0 | 3.3 | 0 | 0 | 0 | 3.3 | 3.3 | 0 | 0 | 0 | 0 | 0 | 0 | 0 |
| STANDBY | 0 | 0 | 3.0 | 0 | 0 | 0 | 0 | 3.3 | 0 | 0 | 0 | 3.3 | 3.3 | 0 | 0 | 0 | 0 | 0 | 0 | 0 |

| REF NO. | IC2003 | | | | | | | | | | | | | | | | | | | |
|---|---|---|---|---|---|---|---|---|---|---|---|---|---|---|---|---|---|---|---|---|
| MODE | 61 | 62 | 63 | 64 | 65 | 66 | 67 | 68 | 69 | 70 | 71 | 72 | 73 | 74 | 75 | 76 | 77 | 78 | 79 | 80 |
| POWER ON | 0 | 0 | 0 | 3.0 | 3.0 | 0 | 0 | 0 | 3.3 | 0 | 0 | 0 | 3.3 | 3.3 | 3.3 | 3.3 | 3.3 | 0 | 0 | 0 |
| STANDBY | 0 | 0 | 0 | 3.0 | 3.0 | 0 | 0 | 0 | 3.3 | 0 | 0 | 0 | 3.3 | 3.3 | 3.3 | 3.3 | 3.3 | 0 | 0 | 0 |

**SA-AKX74 MAIN P.C.B.**

## 18.1.5. Main P.C.B. (2/4)

| REF NO. | IC2003 | | | | | | | | | | | | | | | | | | | |
|---|---|---|---|---|---|---|---|---|---|---|---|---|---|---|---|---|---|---|---|---|
| MODE | 81 | 82 | 83 | 84 | 85 | 86 | 87 | 88 | 89 | 90 | 91 | 92 | 93 | 94 | 95 | 96 | 97 | 98 | 99 | 100 |
| POWER ON | 0 | 3.3 | 3.3 | 0 | 0 | 3.3 | 3.3 | 3.3 | 3.3 | 0 | 0 | 0 | 0.6 | 0.9 | 3.3 | 0 | 0.9 | 3.3 | 2.6 | 3.3 |
| STANDBY | 0 | 3.3 | 3.3 | 0 | 0 | 3.3 | 3.3 | 3.3 | 3.3 | 0 | 0 | 0 | 0.6 | 0.9 | 3.3 | 0 | 0.9 | 3.3 | 2.6 | 3.3 |

| REF NO. | IC2004 | | | | | | | | | | | | | | | | | | | |
|---|---|---|---|---|---|---|---|---|---|---|---|---|---|---|---|---|---|---|---|---|
| MODE | 1 | 2 | 3 | 4 | 5 | 6 | 7 | 8 | | | | | | | | | | | | |
| POWER ON | 9.1 | 17.1 | 5.5 | 0 | 8.8 | 8.8 | 8.8 | 17.0 | | | | | | | | | | | | |
| TUNER | 9.1 | 17.1 | 5.5 | 0 | 8.8 | 8.8 | 8.8 | 17.0 | | | | | | | | | | | | |

| REF NO. | IC2005 | | | | | | | | | | | | | | | | | | | |
|---|---|---|---|---|---|---|---|---|---|---|---|---|---|---|---|---|---|---|---|---|
| MODE | 1 | 2 | 3 | 4 | 5 | 6 | 7 | 8 | | | | | | | | | | | | |
| CD PLAY | 9.0 | 9.0 | 9.0 | 0 | 9.0 | 9.0 | 9.0 | 17.8 | | | | | | | | | | | | |
| STANDBY | 0 | 0 | 0 | 0 | 0 | 0 | 0 | 17.8 | | | | | | | | | | | | |

| REF NO. | IC2006 | | | | | | | | | | | | | | | | | | | |
|---|---|---|---|---|---|---|---|---|---|---|---|---|---|---|---|---|---|---|---|---|
| MODE | 1 | 2 | 3 | 4 | 5 | 6 | 7 | 8 | | | | | | | | | | | | |
| POWER ON | 0 | 0 | 0 | 0 | 2.0 | 3.0 | 3.0 | 3.3 | | | | | | | | | | | | |
| STANDBY | 0 | 0 | 0 | 0 | 2.0 | 3.0 | 3.0 | 3.3 | | | | | | | | | | | | |

| REF NO. | IC2008 | | | | | | | | | | | | | | | | | | | |
|---|---|---|---|---|---|---|---|---|---|---|---|---|---|---|---|---|---|---|---|---|
| MODE | 1 | 2 | 3 | 4 | 5 | | | | | | | | | | | | | | | |
| POWER ON | 5.2 | 0 | 3.3 | 3.3 | 5.2 | | | | | | | | | | | | | | | |
| STANDBY | 5.2 | 0 | 3.3 | 3.3 | 5.2 | | | | | | | | | | | | | | | |

| REF NO. | IC2010 | | | | | | | | | | | | | | | | | | | |
|---|---|---|---|---|---|---|---|---|---|---|---|---|---|---|---|---|---|---|---|---|
| MODE | 1 | 2 | 3 | 4 | 5 | | | | | | | | | | | | | | | |
| POWER ON | 18.2 | 9.3 | 0 | 1 | 2.9 | | | | | | | | | | | | | | | |
| STANDBY | 18.2 | 9.3 | 0 | 1 | 2.9 | | | | | | | | | | | | | | | |

| REF NO. | IC2011 | | | | | | | | | | | | | | | | | | | |
|---|---|---|---|---|---|---|---|---|---|---|---|---|---|---|---|---|---|---|---|---|
| MODE | 1 | 2 | 3 | 4 | 5 | | | | | | | | | | | | | | | |
| POWER ON | 18.0 | 5.2 | 0 | 1.0 | 2.9 | | | | | | | | | | | | | | | |
| STANDBY | 18.0 | 5.2 | 0 | 1.0 | 2.9 | | | | | | | | | | | | | | | |

| REF NO. | IC2012 | | | | | | | | | | | | | | | | | | | |
|---|---|---|---|---|---|---|---|---|---|---|---|---|---|---|---|---|---|---|---|---|
| MODE | 1 | 2 | 3 | 4 | 5 | 6 | 7 | 8 | | | | | | | | | | | | |
| POWER ON | 7.1 | 0.5 | 0.5 | 0 | 0 | 0 | 0 | 18.0 | | | | | | | | | | | | |
| STANDBY | 7.1 | 0.5 | 0.5 | 0 | 0 | 0 | 0 | 18.0 | | | | | | | | | | | | |

| REF NO. | IC2014 | | | | | | | | | | | | | | | | | | | |
|---|---|---|---|---|---|---|---|---|---|---|---|---|---|---|---|---|---|---|---|---|
| MODE | 1 | 2 | 3 | 4 | 5 | 6 | 7 | 8 | | | | | | | | | | | | |
| POWER ON | 3.4 | 0.8 | 0 | 0 | 5.1 | 0 | 0 | 5.2 | | | | | | | | | | | | |
| STANDBY | 3.4 | 0.8 | 0 | 0 | 5.1 | 0 | 0 | 5.2 | | | | | | | | | | | | |

| REF NO. | IC5600 | | | | | | | | | | | | | | | | | | | |
|---|---|---|---|---|---|---|---|---|---|---|---|---|---|---|---|---|---|---|---|---|
| MODE | 1 | 2 | 3 | 4 | 5 | 6 | 7 | 8 | 9 | 10 | 11 | 12 | 13 | 14 | | | | | | |
| CD PLAY | 0 | 5.1 | 0 | 0 | 2.7 | 2.2 | 0 | 2.6 | 2.3 | 0 | 2.5 | 2.7 | 2.3 | 5.3 | | | | | | |
| STANDBY | 0 | 5.1 | 0 | 0 | 2.7 | 2.2 | 0 | 2.6 | 2.3 | 0 | 2.5 | 2.7 | 2.3 | 5.3 | | | | | | |

**SA-AKX74 MAIN P.C.B .**

## 18.1.6. Main P.C.B. (3/4)

| REF NO. | IC5700 | | | | | | | | | | | | | | | | | | | |
|---|---|---|---|---|---|---|---|---|---|---|---|---|---|---|---|---|---|---|---|---|
| MODE | 1 | 2 | 3 | 4 | 5 | 6 | 7 | 8 | 9 | 10 | 11 | 12 | 13 | 14 | 15 | 16 | 17 | 18 | 19 | 20 |
| CD PLAY | -11.0 | 0 | 0 | 34.5 | 0 | -32.9 | -24.6 | 35.6 | 0 | 0 | -34.0 | -31.0 | -34.0 | 0 | 9.0 | 34.6 | -34.0 | -34.0 | 0 | 34.0 |
| STANDBY | -11.0 | 0 | 0 | 34.5 | 0 | -32.9 | -24.6 | 35.6 | 0 | 0 | -34.0 | -31.0 | -34.0 | 0 | 9.0 | 34.6 | -34.0 | -34.0 | 0 | 34.0 |

| REF NO. | IC5700 | | | | | | | | | | | | | | | | | | | |
|---|---|---|---|---|---|---|---|---|---|---|---|---|---|---|---|---|---|---|---|---|
| MODE | 21 | 22 | 23 | | | | | | | | | | | | | | | | | |
| CD PLAY | 0 | 0 | 5.0 | | | | | | | | | | | | | | | | | |
| STANDBY | 0 | 0 | 2.3 | | | | | | | | | | | | | | | | | |

| REF NO. | IC5800 | | | | | | | | | | | | | | | | | | | |
|---|---|---|---|---|---|---|---|---|---|---|---|---|---|---|---|---|---|---|---|---|
| MODE | 1 | 2 | 3 | 4 | 5 | 6 | 7 | 8 | 9 | 10 | 11 | 12 | 13 | 14 | 15 | 16 | 17 | 18 | 19 | 20 |
| CD PLAY | -11.0 | 0 | 0 | 34.5 | 0 | -32.9 | -24.6 | 35.6 | 0 | 0 | -34.0 | -31.0 | -34.0 | 0 | 9.0 | 34.6 | -34.0 | -34.0 | 0 | 34.0 |
| STANDBY | -11.0 | 0 | 0 | 34.5 | 0 | -32.9 | -24.6 | 35.6 | 0 | 0 | -34.0 | -31.0 | -34.0 | 0 | 9.0 | 34.6 | -34.0 | -34.0 | 0 | 34.0 |

| REF NO. | IC5800 | | | | | | | | | | | | | | | | | | | |
|---|---|---|---|---|---|---|---|---|---|---|---|---|---|---|---|---|---|---|---|---|
| MODE | 21 | 22 | 23 | | | | | | | | | | | | | | | | | |
| CD PLAY | 0 | 0 | 5.0 | | | | | | | | | | | | | | | | | |
| STANDBY | 0 | 0 | 2.3 | | | | | | | | | | | | | | | | | |

| REF NO. | Q2000 | | | | Q2001 | | | | Q2004 | | | | Q2005 | | | | Q2006 | | | |
|---|---|---|---|---|---|---|---|---|---|---|---|---|---|---|---|---|---|---|---|---|
| MODE | E | C | B | | E | C | B | | E | C | B | | E | C | B | | E | C | B | |
| CD PLAY | 0 | 1.7 | 2.3 | | 0 | 0 | 0.5 | | 0 | 2.0 | 0 | | 3.3 | 2.0 | 0 | | 0 | 0 | 3.3 | |
| STANDBY | 0 | 1.7 | 2.3 | | 0 | 0 | 0.5 | | 0 | 2.0 | 0 | | 3.3 | 2.0 | 0 | | 0 | 0 | 3.3 | |

| REF NO. | Q2007 | | | | Q2008 | | | | Q2009 | | | | Q2010 | | | | Q2011 | | | |
|---|---|---|---|---|---|---|---|---|---|---|---|---|---|---|---|---|---|---|---|---|
| MODE | E | C | B | | E | C | B | | E | C | B | | E | C | B | | E | C | B | |
| CD PLAY | 0 | 9.0 | 4.3 | | 0 | 8.8 | 0 | | 0 | 8.8 | 2.0 | | 0 | 8.8 | 2.0 | | 0 | 3.3 | 0 | |
| STANDBY | 0 | 9.0 | 4.3 | | 0 | 8.8 | 0 | | 0 | 8.8 | 2.0 | | 0 | 8.8 | 2.0 | | 0 | 3.3 | 0 | |

| REF NO. | Q2016 | | | | Q2017 | | | | Q2023 | | | | Q2026 | | | | Q2028 | | | |
|---|---|---|---|---|---|---|---|---|---|---|---|---|---|---|---|---|---|---|---|---|
| MODE | E | C | B | | E | C | B | | E | C | B | | E | C | B | | E | C | B | |
| CD PLAY | 2.3 | 1.6 | 1.1 | | 0 | 3.2 | 0 | | 18.2 | 0 | 18.1 | | 0 | 0 | 1.9 | | 8.1 | 17.2 | 8.5 | |
| STANDBY | 2.3 | 1.6 | 1.1 | | 0 | 3.2 | 0 | | 18.2 | 0 | 18.1 | | 0 | 0 | 1.9 | | 8.1 | 17.2 | 8.5 | |

| REF NO. | Q2029 | | | | Q2030 | | | | Q2032 | | | | Q2035 | | | | Q2037 | | | |
|---|---|---|---|---|---|---|---|---|---|---|---|---|---|---|---|---|---|---|---|---|
| MODE | E | C | B | | E | C | B | | E | C | B | | E | C | B | | E | C | B | |
| CD PLAY | 8.1 | 17.2 | 8.5 | | 8.1 | 17.2 | 8.5 | | 8.1 | 17.2 | 8.5 | | 0 | 34.1 | 2.0 | | 0 | 4.4 | 3.0 | |
| STANDBY | 8.1 | 17.2 | 8.5 | | 8.1 | 17.2 | 8.5 | | 8.1 | 17.2 | 8.5 | | 0 | 34.1 | 2.0 | | 0 | 4.4 | 3.0 | |

| REF NO. | Q2038 | | | | Q2039 | | | | Q2040 | | | | Q2041 | | | | Q2042 | | | |
|---|---|---|---|---|---|---|---|---|---|---|---|---|---|---|---|---|---|---|---|---|
| MODE | E | C | B | | E | C | B | | E | C | B | | E | C | B | | E | C | B | |
| CD PLAY | 0 | 1.9 | 1.5 | | 0.9 | 0 | 1.9 | | 0 | 4.3 | 4.4 | | 0 | 4.4 | 4.3 | | 0 | 3.3 | 0 | |
| STANDBY | 0 | 1.9 | 1.5 | | 0.9 | 0 | 1.9 | | 0 | 4.3 | 4.4 | | 0 | 4.4 | 4.3 | | 0 | 3.3 | 0 | |

| REF NO. | Q2050 | | | | Q5603 | | | | Q5604 | | | | | | | | | | | |
|---|---|---|---|---|---|---|---|---|---|---|---|---|---|---|---|---|---|---|---|---|
| MODE | E | C | B | | E | C | B | | E | C | B | | | | | | | | | |
| CD PLAY | 0 | 0 | 9.0 | | 0 | 3.3 | 0 | | 0 | 3.3 | 0 | | | | | | | | | |
| STANDBY | 0 | 0 | 0.2 | | 0 | 3.3 | 0 | | 0 | 3.3 | 0 | | | | | | | | | |

**SA-AKX74 MAIN P.C.B.**

## 18.1.7. Main P.C.B. (4/4)

| REF NO. | Q2018 | | | | Q2022 | | | | Q2024 | | | | Q2025 | | | | Q2027 | | | |
|---|---|---|---|---|---|---|---|---|---|---|---|---|---|---|---|---|---|---|---|---|
| MODE | E | C | B | | E | C | B | | E | C | B | | E | C | B | | E | C | B | |
| POWER ON | 0 | 5.0 | 0 | | 5.1 | 7.0 | 5.8 | | 0 | 3.2 | 1.0 | | 0 | 1.0 | 5.0 | | 9.0 | 8.9 | 9.0 | |
| STANDBY | 0 | 5.0 | 0 | | 5.1 | 7.0 | 5.8 | | 0 | 3.2 | 1.0 | | 0 | 1.0 | 5.0 | | 9.0 | 8.9 | 9.0 | |
| REF NO. | Q2018 | | | | Q2022 | | | | Q2024 | | | | Q2025 | | | | Q2027 | | | |
| MODE | E | C | B | | E | C | B | | E | C | B | | E | C | B | | E | C | B | |
| POWER ON | 0 | 5.0 | 0 | | 5.1 | 7.0 | 5.8 | | 0 | 3.2 | 1.0 | | 0 | 1.0 | 5.0 | | 9.0 | 8.9 | 9.0 | |
| STANDBY | 0 | 5.0 | 0 | | 5.1 | 7.0 | 5.8 | | 0 | 3.2 | 1.0 | | 0 | 1.0 | 5.0 | | 9.0 | 8.9 | 9.0 | |
| REF NO. | Q2031 | | | | Q2033 | | | | Q5600 | | | | Q5601 | | | | Q5602 | | | |
| MODE | E | C | B | | E | C | B | | E | C | B | | E | C | B | | E | C | B | |
| POWER ON | 0 | 3.3 | 3.2 | | 16.0 | 18.2 | 7.1 | | 5.1 | 5.1 | 4.5 | | 0 | 5.0 | 0 | | 0 | 0 | 0.6 | |
| STANDBY | 0 | 3.3 | 3.2 | | 16.0 | 18.2 | 7.1 | | 5.1 | 5.1 | 4.5 | | 0 | 5.0 | 0 | | 0 | 0 | 0.6 | |
| REF NO. | QR2000 | | | | QR2001 | | | | QR2003 | | | | QR2005 | | | | QR2006 | | | |
| MODE | E | C | B | | E | C | B | | E | C | B | | E | C | B | | E | C | B | |
| POWER ON | 0 | 0 | 8.9 | | 4.2 | 4.2 | 0 | | 0 | 3.3 | 0 | | 0 | 3.3 | 0 | | 0 | 3.2 | 3.2 | |
| STANDBY | 0 | 0 | 8.9 | | 4.2 | 4.2 | 0 | | 0 | 3.3 | 0 | | 0 | 3.3 | 0 | | 0 | 3.2 | 3.2 | |
| REF NO. | Q2019 | | | | QR2004 | | | | | | | | | | | | | | | |
| MODE | E | C | B | | E | C | B | | | | | | | | | | | | | |
| USB | 5.2 | 5.0 | 0 | | 0 | 0 | 3.3 | | | | | | | | | | | | | |
| STANDBY | 5.2 | 0 | 0 | | 0 | 0 | 0 | | | | | | | | | | | | | |

**SA-AKX74 MAIN P.C.B.**

## 18.1.8. Panel P.C.B.

| REF NO. | IC6000 | | | | | | | | | | | | | | | | | | | |
|---|---|---|---|---|---|---|---|---|---|---|---|---|---|---|---|---|---|---|---|---|
| MODE | 1 | 2 | 3 | 4 | 5 | 6 | 7 | 8 | 9 | 10 | 11 | 12 | 13 | 14 | 15 | 16 | 17 | 18 | 19 | 20 |
| POWER ON | 0 | 0 | 0 | 0 | 2.0 | 0 | 0 | 0 | 2.3 | 0 | 0 | 0 | 3.4 | -16.2 | -16.2 | -19.9 | -21.9 | -20.0 | -21.9 | -19.9 |
| STANDBY | 0 | 0 | 0 | 0 | 2.0 | 0 | 0 | 0 | 2.3 | 0 | 0 | 0 | 3.4 | -16.2 | -16.2 | -19.9 | -21.9 | -20.0 | -21.9 | -19.9 |
| REF NO. | IC6000 | | | | | | | | | | | | | | | | | | | |
| MODE | 21 | 22 | 23 | 24 | 25 | 26 | 27 | 28 | 29 | 30 | 31 | 32 | 33 | 34 | 35 | 36 | 37 | 38 | 39 | 40 |
| POWER ON | -19.9 | -21.9 | -23.7 | -21.9 | -14.2 | -21.9 | -16.2 | -21.9 | -23.9 | -24.3 | -24.3 | -22.0 | -21.9 | 3.40 | -21-9 | -21.9 | -21.9 | 21.9 | -21.9 | -21.9 |
| STANDBY | -19.9 | -21.9 | -23.7 | -21.9 | -14.2 | -21.9 | -16.2 | -21.9 | -23.9 | -24.3 | -24.3 | -22.0 | -21.9 | 3.40 | -21-9 | -21.9 | -21.9 | 21.9 | -21.9 | -21.9 |
| REF NO. | IC6000 | | | | | | | | | | | | | | | | | | | |
| MODE | 41 | 42 | 43 | 44 | | | | | | | | | | | | | | | | |
| POWER ON | -22.0 | -22.0 | 3.4 | 0 | | | | | | | | | | | | | | | | |
| STANDBY | -22.0 | -22.0 | 3.4 | 0 | | | | | | | | | | | | | | | | |
| REF NO. | Q6002 | | | | Q6003 | | | | QR6001 | | | | QR6003 | | | | | | | |
| MODE | E | C | B | | E | C | B | | E | C | B | | E | C | B | | | | | |
| POWER ON | 0 | 5.0 | 0 | | 0 | 17.8 | 0 | | 0 | 0 | 0 | | 0 | 4.0 | 3.0 | | | | | |
| STANDBY | 0 | 5.0 | 0 | | 0 | 17.8 | 0 | | 0 | 0 | 0 | | 0 | 4.0 | 3.0 | | | | | |

**SA-AKX74 PANEL P.C.B.**

## 18.1.9. D-Amp P.C.B.

| REF NO. | IC5900 | | | | | | | | | | | | | | | | | | | |
|---|---|---|---|---|---|---|---|---|---|---|---|---|---|---|---|---|---|---|---|---|
| MODE | 1 | 2 | 3 | 4 | 5 | 6 | 7 | 8 | 9 | 10 | 11 | 12 | 13 | 14 | 15 | 16 | 17 | 18 | 19 | 20 |
| CD PLAY | 2.5 | 7.7 | 0 | 35.1 | 0 | -35.1 | -26.7 | 35.4 | 8.9 | 16.8 | -35.3 | -25.3 | -35.3 | 17.0 | 8.9 | 35.4 | -35.1 | -35.1 | 0 | 35.0 |
| STANDBY | 2.5 | 7.7 | 0 | 35.1 | 0 | -35.1 | -26.7 | 35.4 | 8.9 | 16.8 | -35.3 | -25.3 | -35.3 | 17.0 | 8.9 | 35.4 | -35.1 | -35.1 | 0 | 35.0 |

| REF NO. | IC5900 | | | | | | | | | | | | | | | | | | | |
|---|---|---|---|---|---|---|---|---|---|---|---|---|---|---|---|---|---|---|---|---|
| MODE | 21 | 22 | 23 | | | | | | | | | | | | | | | | | |
| CD PLAY | 7.7 | 0 | 0 | | | | | | | | | | | | | | | | | |
| STANDBY | 7.7 | 0 | 0 | | | | | | | | | | | | | | | | | |

| REF NO. | Q5901 | | | | Q5902 | | | | Q5903 | | | | Q5905 | | | | Q5906 | | | |
|---|---|---|---|---|---|---|---|---|---|---|---|---|---|---|---|---|---|---|---|---|
| MODE | E | C | B | | E | C | B | | E | C | B | | E | C | B | | E | C | B | |
| CD PLAY | -35.0 | 2.5 | -35.1 | | 5.0 | 0 | 4.6 | | 0 | 4.6 | 0.6 | | 0 | 0 | 3.3 | | 0 | 3.3 | 0 | |
| STANDBY | -35.0 | 2.5 | -35.1 | | 5.0 | 0 | 4.6 | | 0 | 4.6 | 0.6 | | 0 | 0 | 3.3 | | 0 | 3.3 | 0 | |

| REF NO. | Q5907 | | | | QR5900 | | | | QR5901 | | | | | | | | | | | |
|---|---|---|---|---|---|---|---|---|---|---|---|---|---|---|---|---|---|---|---|---|
| MODE | E | C | B | | E | C | B | | E | C | B | | | | | | | | | |
| CD PLAY | 0 | 3.3 | 0 | | 0 | 0 | 3.3 | | 5.2 | -34.6 | 5.2 | | | | | | | | | |
| STANDBY | 0 | 3.3 | 0 | | 0 | 5.2 | 0 | | 5.2 | -34.6 | 5.2 | | | | | | | | | |

**SA-AKX74 D-AMP P.C.B.**

## 18.1.10. SMPS P.C.B.

| REF NO. | IC5701 | | | | | | | | | | | | | | | | | | | |
|---|---|---|---|---|---|---|---|---|---|---|---|---|---|---|---|---|---|---|---|---|
| MODE | 1 | 2 | 3 | 4 | 5 | 6 | 7 | | | | | | | | | | | | | |
| POWER ON | 164.8 | 0 | 0 | 19.1 | 0 | 1.4 | 0.5 | | | | | | | | | | | | | |
| STANDBY | 164.8 | 0 | 0 | 19.1 | 0 | 1.4 | 0.5 | | | | | | | | | | | | | |

| REF NO. | IC5799 | | | | | | | | | | | | | | | | | | | |
|---|---|---|---|---|---|---|---|---|---|---|---|---|---|---|---|---|---|---|---|---|
| MODE | 1 | 2 | 3 | 4 | 5 | 6 | 7 | 8 | | | | | | | | | | | | |
| POWER ON | 5.9 | 1.0 | 2.3 | 11.0 | 164.2 | 0 | 0 | 0 | | | | | | | | | | | | |
| STANDBY | 5.9 | 1.0 | 2.3 | 11.0 | 164.2 | 0 | 0 | 0 | | | | | | | | | | | | |

| REF NO. | IC5801 | | | | | | | | | | | | | | | | | | | |
|---|---|---|---|---|---|---|---|---|---|---|---|---|---|---|---|---|---|---|---|---|
| MODE | K | A | R | | | | | | | | | | | | | | | | | |
| POWER ON | 2.4 | 2.0 | -30.0 | | | | | | | | | | | | | | | | | |
| STANDBY | 2.4 | 2.0 | -30.0 | | | | | | | | | | | | | | | | | |

| REF NO. | IC5899 | | | | | | | | | | | | | | | | | | | |
|---|---|---|---|---|---|---|---|---|---|---|---|---|---|---|---|---|---|---|---|---|
| MODE | K | A | R | | | | | | | | | | | | | | | | | |
| POWER ON | 1.2 | 0 | 0 | | | | | | | | | | | | | | | | | |
| STANDBY | 1.2 | 0 | 0 | | | | | | | | | | | | | | | | | |

| REF NO. | Q5720 | | | | Q5721 | | | | Q5722 | | | | Q5860 | | | | Q5861 | | | |
|---|---|---|---|---|---|---|---|---|---|---|---|---|---|---|---|---|---|---|---|---|
| MODE | E | C | B | | E | C | B | | E | C | B | | E | C | B | | E | C | B | |
| POWER ON | 7.3 | 8.5 | 7.6 | | 19.7 | 19.7 | 19.0 | | 0 | 19.6 | 0 | | 0 | 35.2 | 0 | | 1.3 | 0 | 0.7 | |
| STANDBY | 7.4 | 8.6 | 7.7 | | 19.7 | 19.7 | 19.0 | | 0 | 19.6 | 0 | | 0 | 35.2 | 0 | | 1.3 | 0 | 0.7 | |

| REF NO. | Q5862 | | | | Q5898 | | | | Q5899 | | | | QR5801 | | | | QR5802 | | | |
|---|---|---|---|---|---|---|---|---|---|---|---|---|---|---|---|---|---|---|---|---|
| MODE | E | C | B | | E | C | B | | E | C | B | | E | C | B | | E | C | B | |
| POWER ON | 0 | 0 | 0.7 | | 0 | 3.3 | 0 | | -30.0 | -30.0 | 0 | | 0 | 3.1 | 0 | | 0 | 3.3 | 6.6 | |
| STANDBY | 0 | 3.3 | 0 | | 0 | 3.3 | 0 | | -30.0 | -30.0 | 0 | | 0 | 3.1 | 0 | | 0 | 3.3 | 6.6 | |

| REF NO. | QR5810 | | | | QR5811 | | | | QR5812 | | | | | | | | | | | |
|---|---|---|---|---|---|---|---|---|---|---|---|---|---|---|---|---|---|---|---|---|
| MODE | E | C | B | | E | C | B | | E | C | B | | | | | | | | | |
| POWER ON | 0 | 0 | 3.1 | | 0 | 0.5 | 2.0 | | 3.3 | 0 | 0.5 | | | | | | | | | |
| STANDBY | 0 | 0 | 3.1 | | 0 | 0.5 | 2.0 | | 3.3 | 0 | 0.5 | | | | | | | | | |

**SA-AKX74 SMPS P.C.B.**

## 18.1.11. MicP.C.B.

| REF NO. | IC6500 | | | | | | | | | | | | | | | | | | | |
|---|---|---|---|---|---|---|---|---|---|---|---|---|---|---|---|---|---|---|---|---|
| MODE | 1 | 2 | 3 | 4 | 5 | 6 | 7 | 8 | 9 | 10 | 11 | 12 | 13 | 14 | | | | | | |
| POWER ON | 4.3 | 4.3 | 4.3 | 4.3 | 4.3 | 4.3 | 4.3 | 0 | 0 | 4.3 | 0 | 0 | 8.6 | 4.3 | | | | | | |
| STANDBY | 4.3 | 4.3 | 4.3 | 4.3 | 4.3 | 4.3 | 4.3 | 0 | 0 | 4.3 | 0 | 0 | 8.6 | 4.3 | | | | | | |
| **SA-AKX74 MIC P.C.B.** | | | | | | | | | | | | | | | | | | | | |

## 18.1.12. Waveform Table

| | | | |
|---|---|---|---|
| WF No. IC52-2,13,14 (PLAY)<br>0.1Vp-p(200usec/div) | WF No. IC2000-2,3,42,50 (PLAY)<br>0.48Vp-p(1usec/div) | WF No. IC2000-5,6,7 (PLAY)<br>2Vp-p(200usec/div) | WF No. IC2000-17,22 (PLAY)<br>0.48Vp-p(1usec/div) |
| WF No. IC2000-44,47 (PLAY)<br>1.1Vp-p(50usec/div) | WF No. IC2003-12,13 (PLAY)<br>4Vp-p(50nsec/div) | WF No. IC2003-15,16 (PLAY)<br>3Vp-p(10usec/div) | WF No. IC2005-1,2,6,7 (PLAY)<br>0.52Vp-p(1usec/div) |
| WF No. IC5700-10,14 (PLAY)<br>44Vp-p(1usec/div) | WF No. IC5700-2,21 (PLAY)<br>2Vp-p(1usec/div) | WF No. IC5800-10,14 (PLAY)<br>44Vp-p(1usec/div) | WF No. IC5800-2,21 (PLAY)<br>2Vp-p(1usec/div) |
| WF No. IC8001-55,56,57,58,59, 60 (PLAY)<br>0.5Vp-p(2usec/div) | WF No. IC8001-94,95 (PLAY)<br>2.5Vp-p(200usec/div) | WF No. IC8001-123,125 (PLAY)<br>0.4Vp-p(5usec/div) | WF No. IC8301-1,2 (PLAY)<br>2Vp-p(200usec/div) |
| WF No. IC8301-9 (PLAY)<br>0.4Vp-p(1usec/div) | | | |

# 18.2. Illustration of ICs, Transistor and Diode

*Este material se encuentra sin programar, debe ser programado.

C0ABBB000067 (8P)
C0JBAB000902 (14P)

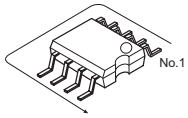


C0FBAK000026(16P)
C1AB00003130(14P)
C3ABPG000163(54P)

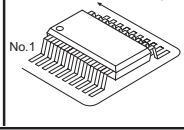


C0HBB0000057 (44P)

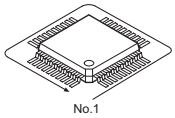


C0DBEYY00123 (8P)
C3FBMY000303 (8P)

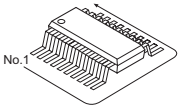


C1BA00000497 (23P)

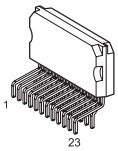


C1AB00003566 (20P)
C3FBXY000039
(169P)

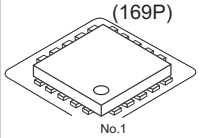


C1AB00003256 (52P)
*MN101EF16KXW (100P)
MN6627992AB (144P)

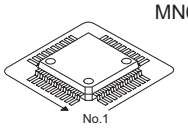


C0GBY0000117

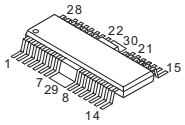


C3EBEY000037 (8P)

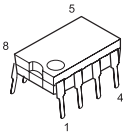


C0AABB000125 (8P)

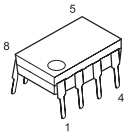


MIP2F20MSSCF (8P)

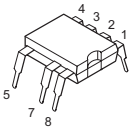


C0DBZYY00311

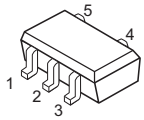


C5HACYY00004 (7P) (PN)
C5HACYY00005 (7P) (PH)

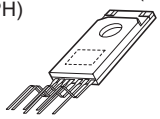

C0DAAYG00001

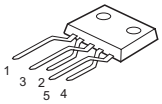


B1BAAL000018
B1BABG000007

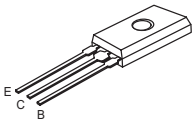


B1ABCF000176
B1ABGC000001
B1ABGC000005

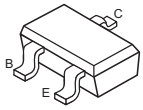


B0ADCC000002
B1ADCE000012
B1ADCF000001
B1GBCFJJ0051
B1GBCFLL0037
B1GDCFGA0018
B1GBCFGN0016
B1GDCFJJ0047

B1AAJC000019

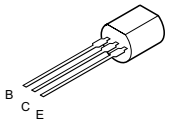


C0DAZYY00039
C0DAEYY00040

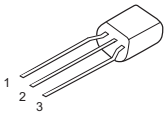


B0HFRJ000012
B0ZAZ0000089

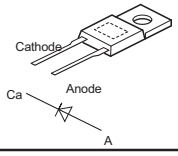


B0ABSM000008

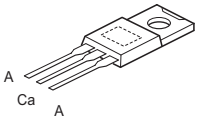


B0ADDJ000032
B1ABCF000231

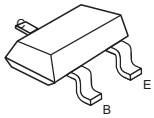


B1GBCFJN0038

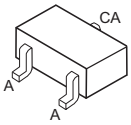


B3AAA0000487
B3AAA0001129
B3AEA0000127
B3AEA0000172

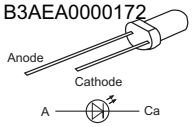


B0FBAR000049

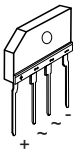


DZ2J033M0L
DZ2J24000L
DZ2J051M0L

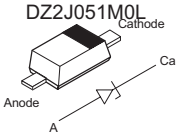


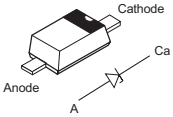


B0BC010A0007 (PH)
B0BC01700015 (PN)
B0BC019A0007
B0BC035A0007
B0BC2R4A0006
B0BC6R100010
B0BC9R000008

B0BC5R600003
B0BC5R6A0266

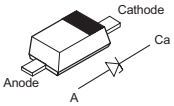


B0ECET000006

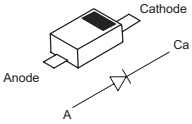


B0ACCK000005
B0ACCK000012
DA2J10100L

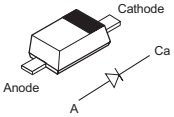


B0HCSP000001
B0JCPD000025

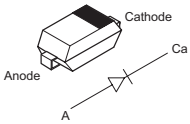


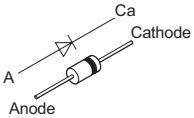


B0EAKM000117
B0EAMM000057
B0HAMP000094 (PH)
B0JAME000114

# 18.3. Terminal Function of ICs

## 18.3.1. IC2003 (*MN101EF16KXW): IC MICRO-PROCESSOR

*Este material se encuentra sin programar, debe ser programado.

| Pin No. | Terminal Name | I/O | Function |
|---|---|---|---|
| 1 | CLIP ATTN | O | Clipping attenuation |
| 2 | ASP_DATA | O | ASP data |
| 3 | ASP_CLK | O | ASP Clock |
| 4 | OCD_SDA | O | OCD Serial data |
| 5 | SW_MUTE | O | Subwoofer Muting |
| 6 | OCD_SCL | O | OC Serial Clock |
| 7 | M.PORT_SW | I | Music Port Detect |
| 8 | HP_SW | I | Headphone Detect |
| 9 | VOL_JOGA | I | Volume Jog A Signal |
| 10 | VOL_JOGB | I | Volume Jog B Signal |
| 11 | MM0D0 (GND) | - | Ground |
| 12 | XTOUT | O | Oscillator Output |
| 13 | XTIN | I | Oscillator Input |
| 14 | VSS | - | Ground |
| 15 | XI | I | Oscillator Input |
| 16 | XO | O | Oscillator Output |
| 17 | VDD3.3 | - | +3.3 Voltage Supply |
| 18 | VDD1.8 | - | +1.8 Voltage Supply |
| 19 | NRST | I | Reset Input (Active L) |
| 20 | FAN_OUT1 | O | Fan Speed Control 1 |
| 21 | FAN_OUT2 | O | Fan Speed Control 2 |
| 22 | TU_SDA | O | Tuner Serial Data |
| 23 | TU_CLK | O | Tuner Clock |
| 24 | TU_RST | O | Tuner Reset |
| 25 | TU_INT | I | Tuner Interrupt |
| 26 | PCONT | O | Power Control |
| 27 | SYNC | I | AC Failure Detection Input |
| 28 | DCDET2 | I | DC Detect (D-AMP IC Failure Detection) |
| 29 | ECO_CNTRL | O | Eco Mode Control |
| 30 | NC | - | No Connection |
| 31 | SMPS_BP | O | SMPS Breatproof |
| 32 | ROTARY JOGB | O | Rotary jog for browse operation (Album & Track) |
| 33 | ROTARY JOGA | O | Rotary jog for browse operation (Album & Track) |
| 34 | EE_DATA | O | EEPROM IC Serial data |
| 35 | EE_CS | O | EEPROM IC Chip select |
| 36 | EE_CLK | O | EEPROM IC Serial clock |
| 37 | VDD18 | - | +1.8V Voltage Supply |
| 38 | LED DIMMER | O | LCD Display Brightness Control |
| 39 | VSS | - | Ground |
| 40 | NC | - | No Connection |
| 41 | MUTE_F | O | Digital Amp Muting control |
| 42 | F_HOP1 | O | Frequency Hopping |
| 43 | DCDECT1 | I | DC Detect (Power Supply Failure Detection) |
| 44 | MODE_DA | O | Digital Amp On/Off control |
| 45 | BASS_CTR | O | Bass Control |
| 46 | MUSIC_CTR | O | Music Control |
| 47 | NC | - | No Connection |
| 48 | NC | - | No Connection |
| 49 | NC | - | No Connection |
| 50 | NC | - | No Connection |
| 51 | SW_LVL_1 | O | Subwoofer Level Setting 1 |
| 52 | SW_LVL_2 | O | Subwoofer Level Setting 2 |
| 53 | NC | - | No Connection |
| 54 | NC | - | No Connection |
| 55 | NC | - | No Connection |
| 56 | CLOSE_SW | I | CD Close Switch Detection |
| 57 | CD_OPEN_SW | I | CD Open Switch Detection |
| 58 | CD_RESET_SW | I | CD Reset Detection |
| 59 | LOAD_CCW | O | Loading Motor Turning Counter-Clockwise (Tray Close) |
| 60 | LOAD_CW | O | Loading Motor Turning Counter-Clockwise (Tray Open) |
| 61 | CD_RESET | O | CD Reset |
| 62 | USB_IN | I | USB Input Detection |
| 63 | VSS | - | Ground |
| 64 | CD_BLKCK | I | CD Block Clock |
| 65 | CD_MLD | O | CD Loading |
| 66 | NC | - | No Connection |
| 67 | REGION 3 | I | Region Setting 3 |
| 68 | NC | - | No Connection |
| 69 | CR TIMER | I | CR Timer |
| 70 | OC | I | USB Over Current |
| 71 | EN | O | USB Enable |
| 72 | CD_MDATA (SYS_RXD) | O | CD data |
| 73 | CD_STAT (SYS_TXD) | I | CD Status |
| 74 | CD_MCLK | O | CD Clock |
| 75 | NC | - | No Connection |
| 76 | NC | - | No Connection |
| 77 | NC | - | No Connection |
| 78 | AMUTE | I | Amp Muting control |
| 79 | USB REC LED | O | USB Rec LED Drive |
| 80 | BASS_SHIFT | O | Bass Level Meter Adjustment |
| 81 | MUTE_A | O | Audio Output Muting |
| 82 | FL_DATA | O | FL Display data input |
| 83 | FL_CS | O | FL Display Data Input |
| 84 | FL_CLK | O | FL Display Clock |
| 85 | REGION 2 | I | Region Setting 2 |
| 86 | RMT | I | Remote Control Signal |
| 87 | NC | - | No Connection |
| 88 | NC | - | No Connection |
| 89 | VDD | - | Voltage supply |
| 90 | NC | - | No Connection |
| 91 | VSS | - | Ground |
| 92 | REGION 1 | AN0 | Region Setting 1 |
| 93 | CLIP SENSOR | AN1 | Clipping sensor (Volume & ASP Bass control) |
| 94 | AUTO BASS | AN2 | Auto Bass setting adjustment |
| 95 | SMPS_ID | AN3 | SMPS Type Detection |
| 96 | LVL MTR | AN4 | Bass Lever Meter Control |
| 97 | TEMP_DET | AN5 | Temperature Detect |
| 98 | KEY 2 | AN6 | Key 2 Input |
| 99 | KEY 1 | AN7 | Key 1 Input |
| 100 | VREF+ | - | Voltage Supply |

# 19 Exploded View and Replacement Parts List

## 19.1. Exploded View and Mechanical replacement Part List

### 19.1.1. Cabinet Parts Location

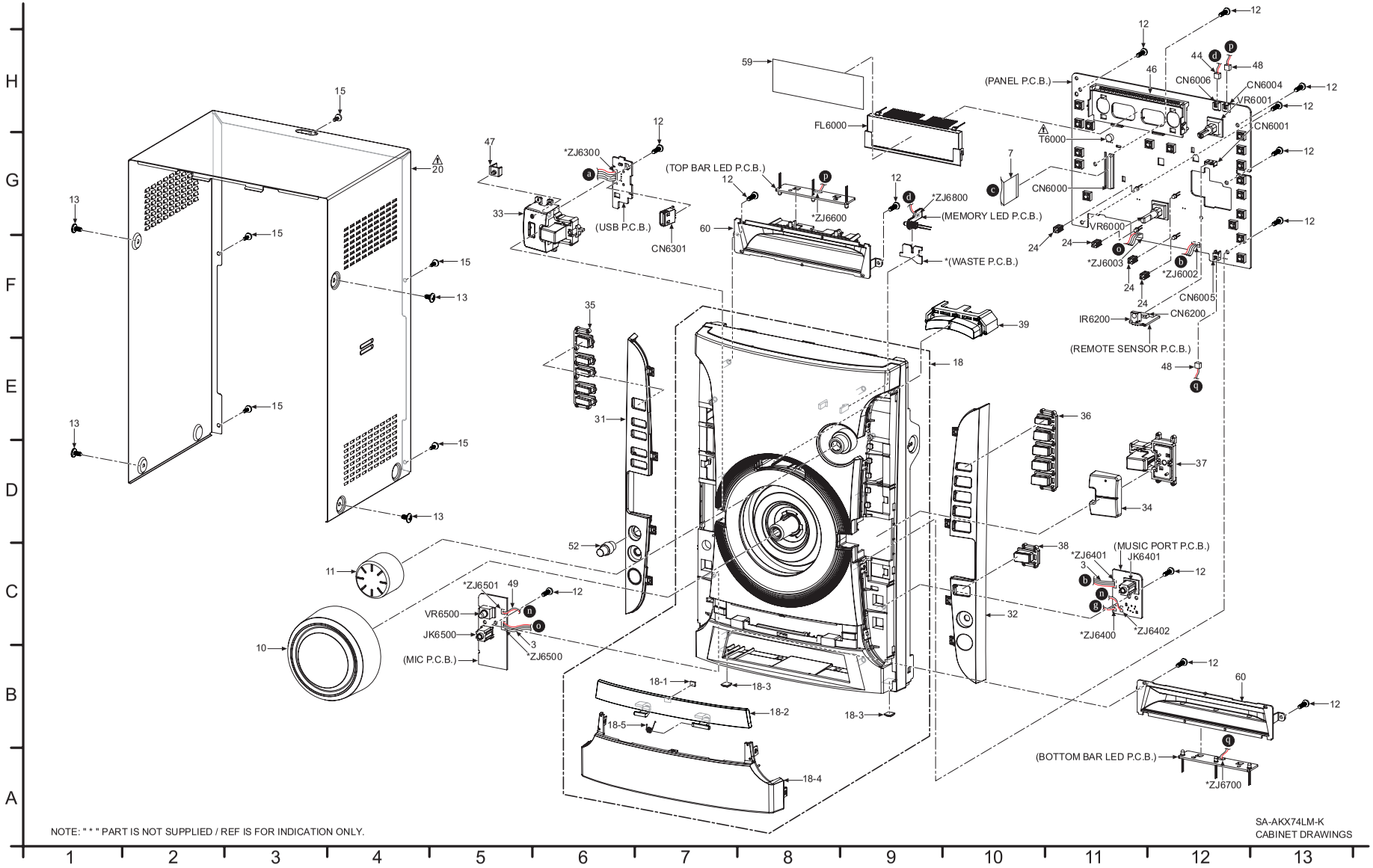

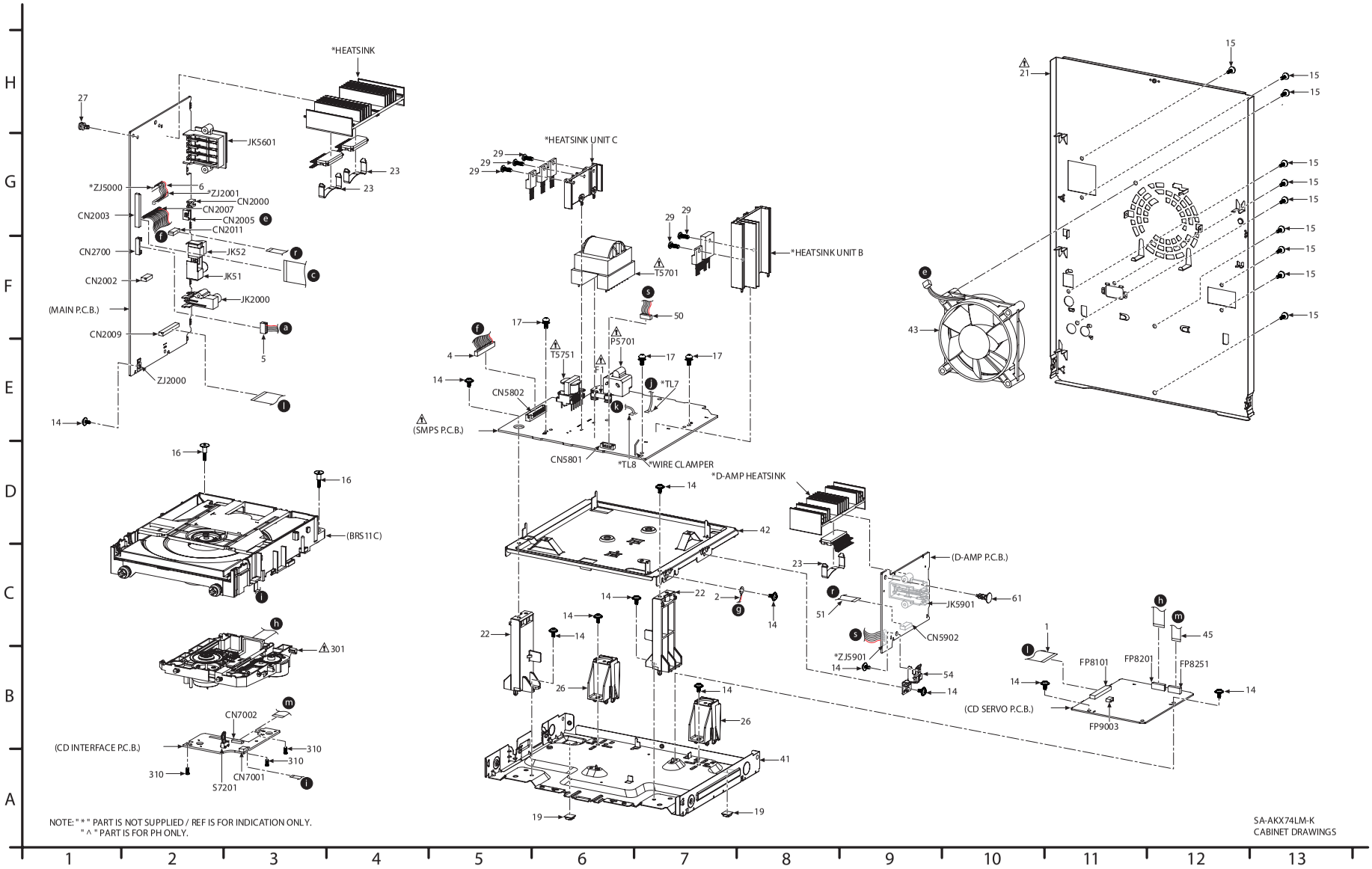


NOTE: " * " PART IS NOT SUPPLIED / REF IS FOR INDICATION ONLY.
" ^ " PART IS FOR PH ONLY.

SA-AKX74LM-K
CABINET DRAWINGS

### 19.1.2. Packaging

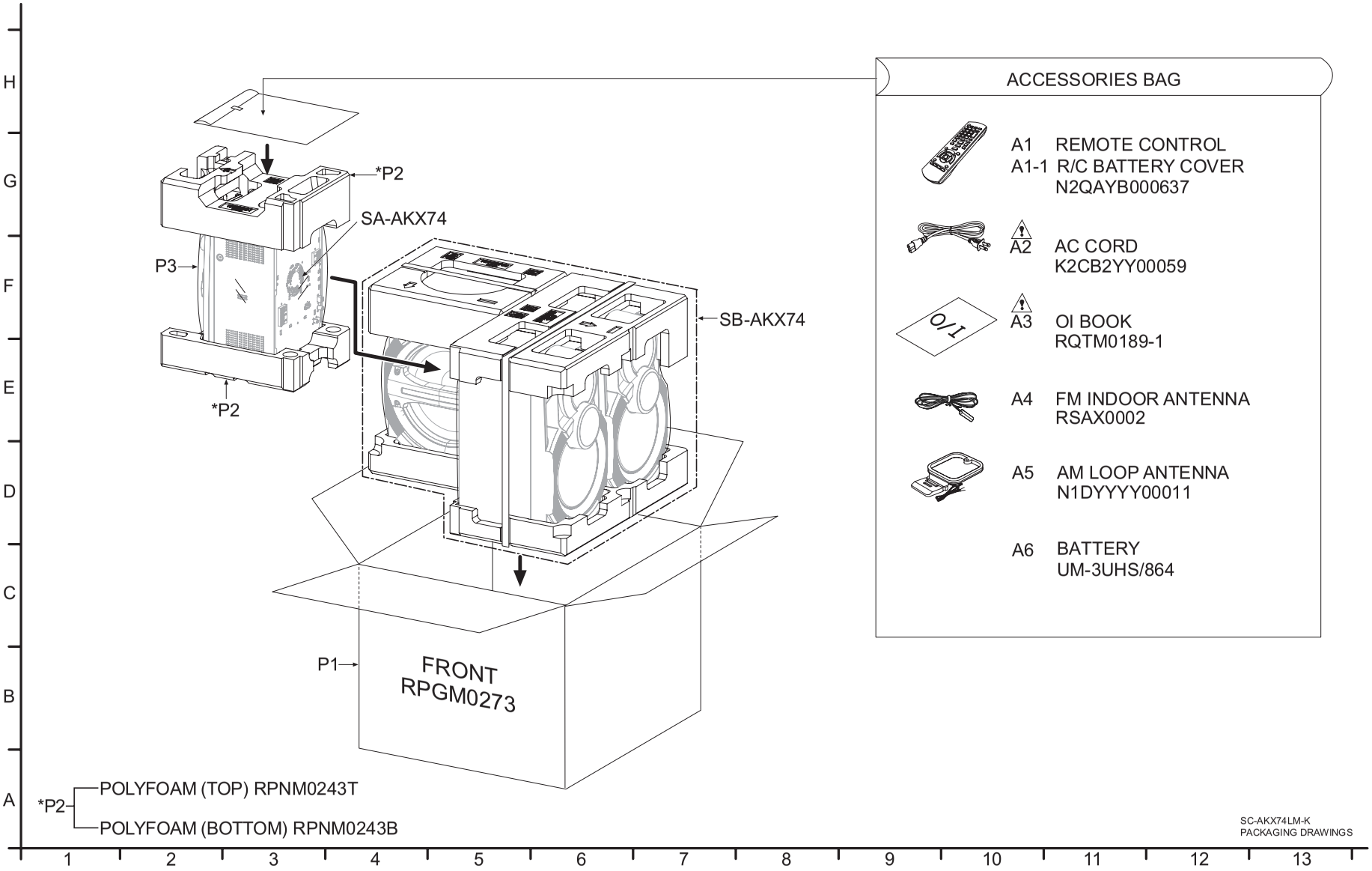

## 19.1.3. Mechanical Replacement Part List

### Important Safety Notice

*Components identified by ⚠ mark have special characteristics important for safety.*
*When replacing any of these components, use only manufacturer's specified parts.*

**RTL (Retention Time Limited)**

**Note:** The marking (RTL) indicates that the Retention Time is Limited for this item.
After the discontinuation of this assembly in production, the item will continue to be available for a specific period of time. The retention period of availability is dependant on the type of assembly, and in accordance with the laws governing part and product retention.
After the end of this period, the assembly will no longer be available.

**Note:**

- When replacing any of these components, be sure to use only manufacturer's specified parts shown in the replacement part list.
- The parenthesized indications on the Remarks column specify the destination & product color (Refer to the cover page for the information).
- Parts without these indications shall be used for all areas.
- This product uses a laser diode. Refer to "Precaution of Laser Diode".
- All parts mentioned are supplied by PAVCSG unless indicated likewise.
- Parts mentioned [SPG] in the Remarks column are supplied by PAVC-CSG.
- Reference for O/I book languages are as follows:

| | | | | | | | |
|---|---|---|---|---|---|---|---|
| Ar: | Arabic | Du: | Dutch | It: | Italian | Sp: | Spanish |
| Cf: | Canadian French | En: | English | Ko: | Korean | S: | Swedish |
| Cz: | Czech | Fr: | French | Po: | Polish | Co: | Traditional Chinese |
| Da: | Danish | Ge: | German | Ru: | Russian | Cn: | Simplified Chinese |
| Pe: | Persian | Ur: | Ukraine | Pr: | Portuguese | | |

| Safety | Ref. No. | Part No. | Part Name & Description | Qty | Remarks |
|---|---|---|---|---|---|
| | | | | | |
| | | | CABINET AND CHASSIS | | |
| | | | | | |
| | 1 | REE1708 | 30P FFC (PANEL-MAIN) | 1 | |
| | 2 | REXX1159-1 | 2P WIRE (MIC-INNER CHS) | 1 | |
| | 3 | REX1487 | 4P CABLE WIRE (PANEL/MIC-MUSIC PORT) | 2 | |
| | 4 | REX1527 | 15P WIRE (SMPS-MAIN) | 1 | |
| | 5 | REX1472 | 5P WIRE (USB-MAIN) | 1 | |
| | 6 | REX1531 | 6P WIRE (MAIN-MAIN) | 1 | |
| | 7 | REE1647 | 27P FFC (PANEL-MAIN) | 1 | |
| | 10 | RGW0428-S1 | VOLUME KNOB | 1 | |
| | 11 | RGW0429-K | SKIP KNOB | 1 | |
| | 12 | RHD26046 | SCREW | 9 | |
| | 13 | RHD30007-K2J | SCREW | 4 | |
| | 14 | RHD30111-31 | SCREW | 10 | |
| | 15 | RHD30119-S | SCREW | 13 | |
| | 16 | RHDX031008 | SCREW | 2 | |
| | 17 | RHDX30005-J | SCREW | 3 | |

| Safety | Ref. No. | Part No. | Part Name & Description | Qty | Remarks |
|---|---|---|---|---|---|
| | 18 | RYPM0308 | FRONT PANEL ASS'Y | 1 | |
| | 18-1 | RMGX0033A-K | CD LID CUSHION | 1 | |
| | 18-2 | RGK2307B-KL | CD LID | 1 | |
| | 18-3 | RKAX0042-K | LEG CUSHION | 2 | |
| | 18-4 | RKW0984-QL | UNDER WINDOW | 1 | |
| | 18-5 | RMB0930 | CD LID SPRING | 1 | |
| | 19 | RKAX0042-K | LEG CUSHION | 2 | |
| ⚠ | 20 | RKMX1011Z-KL | TOP CABINET | 1 | |
| ⚠ | 21 | RXTM0002H-A | REAR PANEL | 1 | |
| | 22 | RMAX1007 | CHASSIS SUPPORT | 2 | |
| | 23 | RMCX0035 | HEAT SINK CLIP | 2 | |
| | 24 | RMNX0151 | LED HOLDER | 4 | |
| | 26 | RMQX1088 | MECHA HOLDER | 2 | |
| | 27 | RMX0444 | PCB SPACER | 1 | |
| | 29 | XTB3+10JFJ | SCREW | 5 | |
| | 31 | RGK2308B-SL | SIDE ORNAMENT L | 1 | |
| | 32 | RGK2309C-SL | SIDE ORNAMENT R | 1 | |
| | 33 | RGK2325A-SL | USB ORNAMENT | 1 | |
| | 34 | RGK2328-SL | PLAY BUTTON ORNAMENT | 1 | |
| | 35 | RGU2764A-SL | POWER BUTTON | 1 | |
| | 36 | RGU2791-SL | FUNCTION BUTTON | 1 | |
| | 37 | RGU2763-SL | PUSH/PLAY BUTTON | 1 | |
| | 38 | RGU2765-SL | CD OPEN CLOSE BUTTON | 1 | |
| | 39 | RGU2792-KL | SKIP BUTTON | 1 | |
| | 41 | RXKM0005A-1 | BOTTOM CHASSIS | 1 | |
| | 42 | RXSM0002-1 | INNER CHASSIS | 1 | |
| | 43 | L6FALEFH0030 | FAN UNIT ASS'Y | 1 | |
| | 44 | REX1521 | 2P CABLE WIRE (PANEL-MEMORY LED) | 1 | |

| Safety | Ref. No. | Part No. | Part Name & Description | Qty | Remarks |
|---|---|---|---|---|---|
| | 45 | REE1671 | 10P FFC (CD SERVO-CD INTER-FACE) | 1 | |
| | 46 | RMNV0079-1 | FL HOLDER | 1 | |
| | 47 | RGL0764-Q | USB REC LIGHT PIECE | 1 | |
| | 49 | REX1522 | 2P GROUND WIRE (MIC-MUSIC PORT) | 1 | |
| | 52 | RGWX0056-1K1 | MIC VOLUME KNOB | 1 | |
| | 59 | RGQ0672-R | FL FILTER SHEET | 1 | |
| | | | | | |
| | | | TRAVERSE DECK | | |
| ⚠ | | RD-DDL100-PX | BRS1C CD UNIT | 1 | |
| ⚠ | 301 | RAE1034Z-V | TRAVERSE ASS'Y | 1 | |
| | 310 | XTN2+6GFJ | SCREW | 3 | |
| | | | | | |
| | | | PACKING MATERI-ALS | | |
| | | | | | |
| | P1 | RPGM0273 | PACKING CASE | 1 | |
| | P2 | RPNM0243T/B | POLYFOAM | 1 | |
| | P3 | RPFX0198 | MIRAMAT | 1 | |
| | | | | | |
| | | | ACCESSORIES | | |
| | | | | | |
| | A1 | N2QAYB000637 | REMOTE CONTROL | 1 | |
| | A1-1 | RKK-PM500EBK | R/C BATTERY COVER | 1 | |
| ⚠ | A2 | K2CB2YY00059 | AC CORD | 1 | |
| ⚠ | A3 | RQTM0189-1 | O/I BOOK (Sp) | 1 | |
| | A4 | RSAX0002 | FM INDOOR ANTENNA | 1 | |
| | A5 | N1DYYYY00011 | AM LOOP ANTENNA | 1 | |
| | A6 | UM-3UHS/864 | PILA CARBON AA | 1 | |

## 19.2. Electrical Replacement Part List

**Important Safety Notice**

*Components identified by ⚠ mark have special characteristics important for safety.*
*When replacing any of these components, use only manufacturer's specified parts.*

**RTL (Retention Time Limited)**

**Note:** The marking (RTL) indicates that the Retention Time is Limited for this item.
After the discontinuation of this assembly in production, the item will continue to be available for a specific period of time. The retention period of availability is dependant on the type of assembly, and in accordance with the laws governing part and product retention.
After the end of this period, the assembly will no longer be available.

**Note:**

- When replacing any of these components, be sure to use only manufacturer's specified parts shown in the replacement part list.
- The parenthesized indications on the Remarks column specify the destination & product color (Refer to the cover page for the information).
- Parts without these indications shall be used for all areas.
- This product uses a laser diode. Refer to "Precaution of Laser Diode".
- Capacitor value are in microfarads (uF) unless specified otherwise, P=Pico-farads (pF), F=Farads.
- Resistance values are in ohms, unless specified otherwise, 1K=1000 (OHM).
- All parts mentioned are supplied by PAVCSG unless indicated likewise.
- Parts mentioned [SPG] in the Remarks column are supplied by PAVC-CSG.

| Safety | Ref. no. | Part No. | Part Name & Description |
|---|---|---|---|
| ⚠ | | K5D802APA008 | FUSIBLE |
| | CN5902 | K1MY09AA0124 | CONECTOR 09 PIN |
| | IC5900 | C1BA00000497 | D-AMP IC |
| | L5903 | G0A150L00003 | BOBINA |
| | C5901 | F1H1H102A219 | CHIP CAPACITOR |
| | C5903 | F1H1H104A013 | CHIP CAPACITOR |
| | C5904 | F1H1H104A013 | CHIP CAPACITOR |
| | C5905 | F1H1H104A013 | CHIP CAPACITOR |
| | C5906 | F1H1H104A013 | CHIP CAPACITOR |
| | C5909 | F1H1H104A013 | CHIP CAPACITOR |
| | C5910 | F1H1H104A013 | CHIP CAPACITOR |
| | C5915 | F1H1A474A001 | CHIP CAPACITOR |
| | C5917 | F1H1H102A219 | CHIP CAPACITOR |
| | C5918 | F1H1H331A013 | CHIP CAPACITOR |
| | C5919 | F1H1A474A001 | CHIP CAPACITOR |
| | C5921 | F1H1H104A013 | CHIP CAPACITOR |
| | C5923 | F1H1H104A013 | CHIP CAPACITOR |
| | C5924 | F1H1H330A230 | CHIP CAPACITOR |
| | C5925 | F1K2A1040007 | CHIP CAPACITOR |
| | C5926 | F1K2A1040007 | CHIP CAPACITOR |
| | C5927 | F1J2A221A030 | CHIP CAPACITOR |
| | C5928 | F1H1H153A219 | CHIP CAPACITOR |
| | C5929 | F1J2A221A030 | CHIP CAPACITOR |
| | C5930 | F1H1C474A140 | CHIP CAPACITOR |
| | C5931 | F1H1H104A013 | CHIP CAPACITOR |
| | C5932 | F1H1H104A013 | CHIP CAPACITOR |
| | C5933 | F1H1H153A219 | CHIP CAPACITOR |
| | C5934 | F1J2A221A030 | CHIP CAPACITOR |
| | C5935 | F1J2A221A030 | CHIP CAPACITOR |
| | C5936 | F1K2A1040007 | CHIP CAPACITOR |
| | C5937 | F1K2A1040007 | CHIP CAPACITOR |
| | C5938 | F1H1H104A013 | CHIP CAPACITOR |
| | C5939 | F1H1H104A013 | CHIP CAPACITOR |
| | C5941 | F1H1A474A001 | CHIP CAPACITOR |
| | C5942 | F1H1H102A219 | CHIP CAPACITOR |
| | C5943 | F1H1H331A013 | CHIP CAPACITOR |
| | C5944 | F1H1A474A001 | CHIP CAPACITOR |
| | C5947 | F1H1H102A219 | CHIP CAPACITOR |
| | C5950 | F1H1H104A013 | CHIP CAPACITOR |
| | C5951 | F1H1H104A013 | CHIP CAPACITOR |
| | C5954 | F1H1H104A013 | CHIP CAPACITOR |
| | C5955 | F1H1H104A013 | CHIP CAPACITOR |
| | C5956 | D0GBR00JA008 | CHIP JUMPER |
| | Q5901 | B1ABGC000005 | TRANSISTOR |
| | Q5902 | B1ADCE000012 | TRANSISTOR |
| | Q5903 | B1ABCF000176 | TRANSISTOR |
| | Q5905 | B1ABCF000176 | TRANSISTOR |
| | Q5906 | B1ABCF000176 | TRANSISTOR |
| | Q5907 | B1ABCF000176 | TRANSISTOR |
| | QR5900 | B1GBCFJJ0051 | TRANSISTOR |
| | QR5901 | B1GDCFJJ0047 | TRANSISTOR |
| | R5901 | ERJ3GEYJ124V | CHIP RESISTOR |
| | R5903 | ERJ3GEYJ103V | CHIP RESISTOR |
| | R5904 | ERJ3GEYJ103V | CHIP RESISTOR |
| | R5905 | ERJ8GEYJ100V | CHIP RESISTOR |
| | R5906 | ERJ3GEYJ184V | CHIP RESISTOR |
| | R5907 | ERJ3RBD273V | CHIP RESISTOR |
| | R5908 | ERJ3GEYJ103V | CHIP RESISTOR |
| | R5909 | ERJ3RBD333V | CHIP RESISTOR |
| | R5910 | ERJ3RBD152V | CHIP RESISTOR |
| | R5911 | ERJ3GEYJ562V | CHIP RESISTOR |
| | R5913 | ERJ3RBD272V | CHIP RESISTOR |
| | R5914 | ERJ3GEYJ562V | CHIP RESISTOR |
| | R5915 | ERJ3GEYJ103V | CHIP RESISTOR |
| | R5917 | ERJ8GEYJ100V | CHIP RESISTOR |
| | R5918 | ERJ3RBD272V | CHIP RESISTOR |
| | R5921 | ERJ8GEYJ100V | CHIP RESISTOR |
| | R5922 | ERJ8GEYJ100V | CHIP RESISTOR |
| | R5923 | ERJ3GEYJ682V | CHIP RESISTOR |
| | R5924 | ERJ3GEYJ562V | CHIP RESISTOR |
| | R5925 | ERJ3GEYJ562V | CHIP RESISTOR |
| | R5926 | ERJ3GEYJ101V | CHIP RESISTOR |
| | R5927 | ERJ3GEYJ823V | CHIP RESISTOR |
| | R5928 | ERJ3GEYJ823V | CHIP RESISTOR |
| | R5931 | ERJ1TYJ220U | CHIP RESISTOR |
| | R5932 | ERJ1TYJ220U | CHIP RESISTOR |
| | R5933 | ERJ3GEYJ562V | CHIP RESISTOR |
| | R5934 | ERJ3GEYJ562V | CHIP RESISTOR |
| | R5935 | ERJ3GEYJ103V | CHIP RESISTOR |
| | R5940 | ERJ3GEYJ104V | CHIP RESISTOR |
| | TH5900 | D4CC11040013 | CHIP TERMISTOR |
| | W5033 | ERJ3GEY0R00V | CHIP JUMPER |
| | W5045 | ERJ3GEY0R00V | CHIP JUMPER |
| | C5907 | F2A1H221B436 | CAPACITOR |
| | C5908 | F2A1H221B436 | CAPACITOR |
| | C5920 | F2A2A220A388 | CAPACITOR |
| | C5945 | F2A1A101A159 | CAPACITOR |
| | C5946 | F2A1C100A234 | ELECTROLYTIC CAPACITOR |
| | C5948 | ECQV1H684JL3 | CAPACITOR |
| | C5949 | ECQV1H684JL3 | CAPACITOR |
| | D5903 | B0EAKM000117 | DIODO |
| | TH5860 | D4CCY1040001 | THERMISTOR |

| Safety | Ref. no. | Part No. | Part Name & Description |
|---|---|---|---|
| | D5904 | B0EAKM000117 | DIODO |
| | D5905 | B0EAKM000117 | DIODO |
| | D5906 | B0EAKM000117 | DIODO |
| | K5901 | Z-W6NL | ALAMBRE JUMPER |
| | K5904 | Z-W6NL | ALAMBRE JUMPER |
| | K5905 | Z-W6NL | ALAMBRE JUMPER |
| | W5022 | Z-W6NL | ALAMBRE JUMPER |
| | W5023 | Z-W6NL | ALAMBRE JUMPER |
| | W5025 | Z-W6NL | ALAMBRE JUMPER |
| | W5027 | Z-W6NL | ALAMBRE JUMPER |
| | W5028 | Z-W6NL | ALAMBRE JUMPER |
| | W5031 | Z-W6NL | ALAMBRE JUMPER |
| | W5048 | Z-W6NL | ALAMBRE JUMPER |
| | L5901 | J0JKB0000020 | EMIBEADCORER |
| | L5902 | J0JKB0000020 | EMIBEADCORER |
| | JK5901 | K4AZ02B00009 | SPEAKER JACK SW |
| | | RD-DAK102-PX | AKX74LM MAIN PCB (SERVICIO) |
| | | REPM12X740A | CONJUNTO MANUAL SMPS AKX74 (MANUAL) |
| | ZA5703 | RMY0416 | HEATSINK |
| | ZA5801 | RMY0417 | HEATSINK |
| | ZA5900 | XTB3+10JFJ | TORNILLO |
| | ZA5901 | XTB3+10JFJ | TORNILLO |
| | ZA5902 | XTB3+10JFJ | TORNILLO |
| | ZA5903 | XTB3+10JFJ | TORNILLO |
| | ZA5904 | XTB3+10JFJ | TORNILLO |
| ⚠ | C5700 | F1BAF471A013 | CHIP CAPACITOR |
| | D5701 | B0FBAR000049 | SILICON RECTIFIER DIODES (5A - LESS THA |
| ⚠ | T5701 | G4DYZ0000060 | SWITCHING TRANSFORMERS |
| | D5801 | B0ABSM000008 | DIODO |
| | D5802 | B0ABSM000008 | DIODO |
| | D5803 | B0HFRJ000012 | DIODE |
| | D5702 | B0ZAZ0000089 | DIODO |
| | IC5701 | C5HACYY00004 | CIRCUITO INTEGRADO |
| | TH5702 | D4CAA2R20001 | Termistor |
| | R5726 | ERX2SZJR10P | RESISTENCIA |
| | R5727 | ERX2SZJR10P | RESISTENCIA |
| ⚠ | T5751 | ETS19AB2E6AG | Backup Switching Transformer |
| | C5713 | F0C2J1030007 | CAPACITOR |
| ⚠ | C5701 | F0CAF104A105 | CAPACITOR |
| ⚠ | C5703 | F0CAF224A105 | CAPACITOR |
| ⚠ | C5708 | F1BAF1020020 | CAPACITOR |
| | C5805 | F2A1H2220043 | E-Cap |
| | C5808 | F2A1H2220043 | E-Cap |
| | C5712 | F2B2D5610024 | CAPACITOR |
| | CN5801 | K1KA06AA0180 | CONECTOR |
| | CN5802 | K1KA15AA0194 | CONECTOR 12 PIN |
| ⚠ | P5701 | K2AB2B000007 | AC INLET |
| | IC5799 | MIP2F20MSSCF | Intelligent power device |
| | C5727 | F1B3A3320013 | E-CAP |
| ⚠ | DZ5701 | ERZV05Z471CS | VARISTORS |
| | R5894 | D0GB151JA008 | CHIP RESISTOR |
| | R5797 | D0GB153JA008 | CHIP RESISTENCIA |
| | R5806 | D0GB153JA008 | CHIP RESISTENCIA |
| | R5895 | D0GB153JA008 | CHIP RESISTENCIA |
| | R5798 | D0GB220JA008 | CHIP RESISTENCIA |
| | R5890 | D0GB222JA008 | RESISTENCIA CHIP |
| | R5868 | D0GB223JA008 | CHIP RESISTOR |
| | R5810 | D0GB331JA008 | CHIP RESISTOR |
| | R5817 | D0GB331JA008 | CHIP RESISTOR |
| | R5733 | D0GB473JA008 | 1HIP RESISTOR |
| | R5814 | D0GB822JA008 | CHIP RESISTOR |
| | R5840 | D0GB823JA008 | CHIP RESISTENCIA |
| | K9 | D0GBR00JA008 | CHIP JUMPER |
| | W5601 | D0GBR00JA008 | CHIP JUMPER |
| | W5604 | D0GBR00JA008 | CHIP JUMPER |
| | R5721 | D0GD103JA017 | CHIP RESISTOR |
| | R5729 | D0GD103JA017 | CHIP RESISTOR |
| | R5724 | D0GD121JA017 | CHIP RESISTOR |
| | R5722 | D0GD122JA017 | CHIP RESISTOR |
| | R5800 | D0GD153JA017 | CHIP RESISTOR |
| | R5862 | D0GD183JA017 | CHIP RESISTOR |
| | R5863 | D0GD183JA017 | CHIP RESISTOR |
| | R5720 | D0GD220JA017 | CHIP RESISTOR |
| | R5866 | D0GD220JA017 | CHIP RESISTOR |
| | R5808 | D0GD222JA017 | CHIP RESISTOR |
| | R5801 | D0GD223JA017 | CHIP RESISTOR |
| | R5807 | D0GD331JA017 | CHIP RESISTOR |
| | R5809 | D0GD331JA017 | CHIP RESISTOR |
| | R5795 | D0GD474JA017 | CHIP RESISTOR |
| | R5706 | D0GD824JA017 | CHIP RESISTOR |
| | W5602 | D0GDR00JA017 | CHIP JUMPER |
| | W5603 | D0GDR00JA017 | CHIP JUMPER |
| | R5832 | D0GZ222JA012 | CHIP RESISTOR |
| | R5833 | D0GZ222JA012 | CHIP RESISTOR |
| | R5834 | D0GZ222JA012 | CHIP RESISTOR |
| | R5835 | D0GZ222JA012 | CHIP RESISTOR |
| | R5836 | D0GZ222JA012 | CHIP RESISTOR |
| | R5837 | D0GZ222JA012 | CHIP RESISTOR |
| | R5702 | D0GZ333JA012 | CHIP RESISTOR |
| | R5703 | D0GZ333JA012 | CHIP RESISTOR |
| | R5892 | D0HB102ZA002 | CHIP RESISTOR |
| | C5798 | F2A1E221B422 | CAPACITOR |

| | | | |
|---|---|---|---|
| | TH5861 | D4CCY1040001 | THERMISTOR |
| | R5860 | ERJ3GEYF103V | CHIP RESISTOR |
| | R5864 | ERJ3GEYF103V | CHIP RESISTOR |
| | R5898 | ERJ3GEYF103V | CHIP RESISTOR |
| | R5802 | ERJ3RBD103V | RESISTENCIA CHIP PEL³CULA |
| | R5803 | ERJ3RBD103V | RESISTENCIA CHIP PEL³CULA |
| | R5893 | ERJ3RBD103V | RESISTENCIA CHIP PEL³CULA |
| | L5704 | J0JBC0000019 | CHIP INDUCTOR |
| | R5805 | ERJ3RBD332V | Resistor |
| | R5891 | ERJ3RBD333V | CHIP RESISTOR |
| | R5804 | ERJ6RBD823V | Resistor |
| | R5708 | ERJ8GEYJ155V | CHIP RESISTOR |
| | R5709 | ERJ8GEYJ155V | CHIP RESISTOR |
| | R5704 | ERJ8GEYJ224V | CHIP RESISTOR |
| | R5705 | ERJ8GEYJ224V | CHIP RESISTOR |
| | C5730 | F1H1E105A116 | CHIP CAPACITOR |
| | C5722 | F1H1H102A219 | CHIP CAPACITOR |
| | C5728 | F1H1H102A219 | CHIP CAPACITOR |
| | C5794 | F1H1H102A219 | CHIP CAPACITOR |
| | C5871 | F1H1H103A219 | CHIP CAPACITOR |
| | C5897 | F1H1H103A219 | CHIP CAPACITOR |
| | C5720 | F1H1H104A013 | CHIP CAPACITOR |
| | C5725 | F1H1H104A013 | CHIP CAPACITOR |
| | C5726 | F1H1H104A013 | CHIP CAPACITOR |
| | C5796 | F1H1H104A013 | CHIP CAPACITOR |
| | C5810 | F1H1H104A013 | CHIP CAPACITOR |
| | C5812 | F1H1H104A013 | CHIP CAPACITOR |
| | C5818 | F1H1H104A013 | CHIP CAPACITOR |
| | C5831 | F1H1H104A013 | CHIP CAPACITOR |
| | C5832 | F1H1H104A013 | CHIP CAPACITOR |
| | C5869 | F1H1H104A013 | CHIP CAPACITOR |
| | C5870 | F1H1H104A013 | CHIP CAPACITOR |
| | C5896 | F1H1H104A013 | CHIP CAPACITOR |
| | C5898 | F1H1H104A013 | CHIP CAPACITOR |
| | C5721 | F1H1H2210001 | CHIP CAPACITOR |
| | C5723 | F1H1H471A219 | CHIP CAPACITOR |
| | C5843 | F1J1A106A043 | CHIP CAPACITOR |
| | C5844 | F1J1A106A043 | CHIP CAPACITOR |
| | C5900 | F1J1A106A043 | CHIP CAPACITOR |
| | C5800 | F1J2E1030004 | CHIP CAPACITOR |
| | C5819 | F1J2E1030004 | CHIP CAPACITOR |
| | C5820 | F1J2E1030004 | CHIP CAPACITOR |
| | C5821 | F1J2E1030004 | CHIP CAPACITOR |
| | C5822 | F1J2E1030004 | CHIP CAPACITOR |
| | C5826 | F1J2E1030004 | CHIP CAPACITOR |
| | C5795 | F1K1H105A149 | CHIP CAPACITOR |
| | D5723 | B0ACCK000012 | DIODE |
| | D5724 | B0ACCK000012 | DIODE |
| | D5727 | B0ACCK000012 | DIODE |
| | D5728 | B0ACCK000012 | DIODE |
| | D5804 | B0ACCK000012 | DIODE |
| | D5721 | B0BC01700015 | DIODO |
| | D5722 | B0BC019A0007 | DIODE |
| | D5732 | B0BC035A0007 | DIODE |
| | D5725 | B0BC6R100010 | DIODO |
| | D5795 | B0BC9R000008 | DIODO |
| | Q5722 | B1ABCF000176 | TRANSISTOR |
| | Q5861 | B1ABCF000176 | TRANSISTOR |
| | Q5898 | B1ABCF000176 | TRANSISTOR |
| | Q5899 | B1ABGC000001 | TRANSISTOR |
| | Q5721 | B1ADCF000001 | TRANSISTOR |
| | Q5860 | B1ADCF000001 | TRANSISTOR |
| | Q5862 | B1GBCFJJ0051 | TRANSISTOR |
| | QR5811 | B1GBCFJJ0051 | TRANSISTOR |
| | QR5801 | B1GBCFJN0038 | CHIP TRANSISTOR |
| | QR5810 | B1GBCFLL0037 | CHIP TRANSISTOR |
| | QR5802 | B1GDCFGA0018 | TRANSISTOR |
| | QR5812 | B1GDCFJJ0047 | TRANSISTOR |
| | R5732 | D0GB101JA008 | CHIP RESISTOR |
| | R5897 | D0GB101JA008 | CHIP RESISTOR |
| | R5723 | D0GB102JA008 | CHIP RESISTOR |
| | R5730 | D0GB102JA008 | CHIP RESISTOR |
| | R5728 | D0GB104JA008 | CHIP RESISTENCIA |
| | R5867 | D0GB104JA008 | CHIP RESISTENCIA |
| | R5896 | D0GB104JA008 | CHIP RESISTENCIA |
| | R5841 | D0GB124JA008 | CHIP RESISTENCIA |
| | R5701 | ERJ3RBD222V | PRESICION CHIP RESISTOR |
| ⚠ | PC5701 | B3PBA0000503 | OPTO ACOPLADOR |
| ⚠ | PC5702 | B3PBA0000503 | OPTO ACOPLADOR |
| ⚠ | PC5720 | B3PBA0000503 | OPTO ACOPLADOR |
| ⚠ | PC5799 | B3PBA0000503 | OPTO ACOPLADOR |
| | R5865 | ERJ3RBD181V | CHIP RESISTOR |
| | D5726 | B0EAKM000117 | DIODO |
| | D5729 | B0EAMM000057 | DIODO |
| | D5731 | B0EAMM000057 | DIODO |
| | D5798 | B0EAMM000057 | DIODO |
| | D5896 | B0EAMM000057 | DIODO |
| | Q5720 | B1BABG000007 | TRANSISTOR |
| | IC5899 | C0DAEYY00040 | ICs For Power Supply • |
| | IC5801 | C0DAZYY00039 | ICS FOR POWER SUPPLY |
| | C5872 | F2A0J222A247 | CAPACITOR |
| | C5899 | F2A1A221B161 | CAPACITOR |
| | C6025 | F1H1H101A720 | CHIP CAPACITOR |
| | C6026 | F1H1H101A720 | CHIP CAPACITOR |

| | | | |
|---|---|---|---|
| | C5813 | F2A1E221B422 | CAPACITOR |
| | C5724 | F2A1H5600009 | CHIP CAPACITOR |
| | C5817 | F2A2AR100002 | CAPACITOR |
| | ZA5701 | K3GE1ZZ00001 | PORTAFUSIBLE |
| | ZA5702 | K3GE1ZZ00001 | PORTAFUSIBLE |
| | W5508 | Z-W6NL | ALAMBRE JUMPER |
| | W5512 | Z-W6NL | ALAMBRE JUMPER |
| | W5533 | Z-W6NL | ALAMBRE JUMPER |
| | W5541 | Z-W6NL | ALAMBRE JUMPER |
| | W5521 | Z-W6NL | ALAMBRE JUMPER |
| | W5504 | Z-W6NL | ALAMBRE JUMPER |
| | W5513 | Z-W6NL | ALAMBRE JUMPER |
| | W5538 | Z-W6NL | ALAMBRE JUMPER |
| | K19 | Z-W6NL | ALAMBRE JUMPER |
| | W5506 | Z-W6NL | ALAMBRE JUMPER |
| | W5528 | Z-W6NL | ALAMBRE JUMPER |
| | W5530 | Z-W6NL | ALAMBRE JUMPER |
| | W5531 | Z-W6NL | ALAMBRE JUMPER |
| | W5532 | Z-W6NL | ALAMBRE JUMPER |
| | W5534 | Z-W6NL | ALAMBRE JUMPER |
| | W5540 | Z-W6NL | ALAMBRE JUMPER |
| | K5715 | Z-W6NL | ALAMBRE JUMPER |
| | W5524 | Z-W6NL | ALAMBRE JUMPER |
| | W5527 | Z-W6NL | ALAMBRE JUMPER |
| | W5536 | Z-W6NL | ALAMBRE JUMPER |
| | W5537 | Z-W6NL | ALAMBRE JUMPER |
| | K5711 | Z-W6NL | ALAMBRE JUMPER |
| | K5714 | Z-W6NL | ALAMBRE JUMPER |
| | W5505 | Z-W6NL | ALAMBRE JUMPER |
| | W5509 | Z-W6NL | ALAMBRE JUMPER |
| | W5516 | Z-W6NL | ALAMBRE JUMPER |
| | W5518 | Z-W6NL | ALAMBRE JUMPER |
| | W5520 | Z-W6NL | ALAMBRE JUMPER |
| | W5525 | Z-W6NL | ALAMBRE JUMPER |
| | W5526 | Z-W6NL | ALAMBRE JUMPER |
| | W5510 | Z-W6NL | ALAMBRE JUMPER |
| | W5514 | Z-W6NL | ALAMBRE JUMPER |
| | W5519 | Z-W6NL | ALAMBRE JUMPER |
| | W5523 | Z-W6NL | ALAMBRE JUMPER |
| | W5529 | Z-W6NL | ALAMBRE JUMPER |
| | W5511 | Z-W6NL | ALAMBRE JUMPER |
| | W5515 | Z-W6NL | ALAMBRE JUMPER |
| | W5517 | Z-W6NL | ALAMBRE JUMPER |
| | W5522 | Z-W6NL | ALAMBRE JUMPER |
| | W5535 | Z-W6NL | ALAMBRE JUMPER |
| | K5740 | Z-W6NL | ALAMBRE JUMPER |
| | K5741 | Z-W6NL | ALAMBRE JUMPER |
| ⚠ | PCB | RJB3568A-1 | PRINTED CIRCUIT BOARD (SMPS LOW / MID PC |
| | R5861 | ERJ3RBD182V | CHIP RESISTOR |
| | D5730 | B0ECET000006 | SWITCHING DIODES |
| ⚠ | L5701 | G0B932H00002 | LINE CHOKE COIL |
| | | REPM12X743A | CONJUNTO MANUAL PANEL AKX74 (SERVICIO) |
| | CN6000 | K1MY27AA0124 | CONECTOR 27 PIN |
| | CN6001 | K1KA04A00553 | CONECTOR 4 PINES MACHO |
| | CN6004 | K1KA02BA0061 | CONECTOR 2 PINES |
| | CN6005 | K1KA02BA0061 | CONECTOR 2 PINES |
| | CN6006 | K1KA02BA0125 | CONECTOR 02 PIN |
| | FL6000 | A2BB00000184 | FLUORESCENT CHARACTER DISPLAY TUBES |
| | T6000 | G4DYA0000214 | Small transformer |
| | VR6000 | EVEKE2F3524B | CONTROL DE VOLUMEN |
| | VR6001 | K9AA012Y0004 | ENCODER |
| | ZB6005 | RMNV0079-1 | FL HOLDER |
| | CN6200 | K1KB04B00043 | CONECTOR 4 PINES EMBRA |
| | IR6200 | B3RAB0000084 | SENSOR PARA CONTRO REMOTO |
| | CN6301 | K1FY104A0007 | USB TYPE A RECEPTACLE PCB 180 CONECTOR |
| | JK6401 | K2HC103A0031 | HEADPHONE JECK |
| | ZJ6400 | REXX1159-1 | 2P Ground Wire (Mic to Inner Chassis) |
| | ZJ6401 | REX1487 | 4P FLAT WIRE (MIC PCB TO PANEL PCB) |
| | JK6500 | K2HC103A0031 | HEADPHONE JECK |
| | VR6500 | EVUF2AF15B14 | POTENCIOMETRO |
| | ZJ6500 | REX1487 | 4P FLAT WIRE (MIC PCB TO PANEL PCB) |
| | ZJ6501 | REX1522 | 2P GROUND WIRE (MIC PCB TO M.PORT PCB) |
| | ZJ6600 | REX1488 | 2P FLAT WIRE (TOP / BOTTOM LIGHT PCB TO |
| | ZJ6700 | REX1488 | 2P FLAT WIRE (TOP / BOTTOM LIGHT PCB TO |
| | ZJ6800 | REX1521 | 2P FLAT WIRE (MEMORY LIGHT PCB TO PANEL |
| | C6003 | F1H1H104A013 | CHIP CAPACITOR |
| | C6004 | F1H1H102A219 | CHIP CAPACITOR |
| | C6005 | F1H1H102A219 | CHIP CAPACITOR |
| | C6007 | F1H1H102A219 | CHIP CAPACITOR |
| | C6008 | F1H1H102A219 | CHIP CAPACITOR |
| | C6009 | F1H1H102A219 | CHIP CAPACITOR |
| | C6010 | F1H1H331A013 | CHIP CAPACITOR |
| | C6011 | F1H1H102A219 | CHIP CAPACITOR |
| | C6012 | F1H1H331A013 | CHIP CAPACITOR |
| | C6013 | F1H1H331A013 | CHIP CAPACITOR |
| | C6014 | F1H1H102A219 | CHIP CAPACITOR |
| | C6016 | F1H1H102A219 | CHIP CAPACITOR |
| | C6018 | F1H1H102A219 | CHIP CAPACITOR |
| | C6019 | F1H1H102A219 | CHIP CAPACITOR |
| | C6020 | F1H1H102A219 | CHIP CAPACITOR |
| | C6021 | F1H1H103A219 | CHIP CAPACITOR |
| | C6022 | F1H1H102A219 | CHIP CAPACITOR |
| | W47 | ERJ8GEY0R00V | CHIP JUMPER |
| | W48 | ERJ8GEY0R00V | CHIP JUMPER |

| | | | |
|---|---|---|---|
| | C6027 | F1H1H101A720 | CHIP CAPACITOR |
| | C6030 | F1H1H101A720 | CHIP CAPACITOR |
| | C6031 | F1H1H104A013 | CHIP CAPACITOR |
| | D6008 | DZ2J24000L | DIODO |
| | D6009 | B0BC2R4A0006 | ZENER DIODE |
| | D6010 | B0BC035A0007 | DIODE |
| | IC6000 | C0HBB0000057 | FL DRIVER IC |
| | L6000 | J0JBC0000019 | CHIP INDUCTOR |
| | QR6001 | B1GBCFJJ0051 | TRANSISTOR |
| | QR6003 | B1GBCFJJ0051 | TRANSISTOR |
| | R6000 | ERJ3GEYJ122V | RESISTENCIA CHIP PEL³CULA |
| | R6001 | ERJ3GEYJ152V | RESISTENCIA CHIP PEL³CULA |
| | R6002 | ERJ3GEYJ332V | CHIP RESISTOR |
| | R6003 | ERJ3GEYJ222V | CHIP RESISTOR |
| | R6004 | ERJ3GEYJ472V | RESISTENCIA CHIP PEL³CULA |
| | R6005 | ERJ3GEYJ682V | CHIP RESISTOR |
| | R6006 | ERJ3GEYJ473V | RESISTENCIA CHIP PEL³CULA |
| | R6008 | ERJ3GEYJ101V | CHIP RESISTOR |
| | R6010 | ERJ3GEYJ470V | RESISTENCIA CHIP PEL³CULA |
| | R6011 | ERJ3GEYJ222V | CHIP RESISTOR |
| | R6012 | ERJ3GEYJ152V | RESISTENCIA CHIP PEL³CULA |
| | R6013 | ERJ3GEYJ153V | RESISTENCIA CHIP PEL³CULA |
| | R6014 | ERJ3GEYJ153V | RESISTENCIA CHIP PEL³CULA |
| | R6015 | ERJ3GEYJ682V | CHIP RESISTOR |
| | R6016 | ERJ3GEYJ332V | CHIP RESISTOR |
| | R6017 | ERJ3GEYJ472V | RESISTENCIA CHIP PEL³CULA |
| | R6018 | ERJ3GEYJ122V | RESISTENCIA CHIP PEL³CULA |
| | R6019 | ERJ3GEYJ272V | RESISTENCIA CHIP PEL³CULA |
| | R6020 | ERJ3GEYJ103V | CHIP RESISTOR |
| | R6024 | ERJ3GEYJ103V | CHIP RESISTOR |
| | R6028 | ERJ3GEYJ181V | RESISTENCIA |
| | R6029 | ERJ3GEYJ221V | RESISTENCIA CHIP PEL³CULA |
| | R6030 | ERJ3GEYJ471V | RESISTENCIA CHIP PEL³CULA |
| | R6031 | ERJ3GEYJ221V | RESISTENCIA CHIP PEL³CULA |
| | R6033 | ERJ3GEYJ823V | CHIP RESISTOR |
| | R6035 | ERJ3GEY0R00V | CHIP JUMPER |
| | R6038 | ERJ3GEYJ562V | CHIP RESISTOR |
| | R6039 | ERJ3GEYJ470V | RESISTENCIA CHIP PEL³CULA |
| | R6040 | ERJ3GEYJ103V | CHIP RESISTOR |
| | R6041 | ERJ3GEYJ103V | CHIP RESISTOR |
| | R6047 | ERJ3GEYJ1R0V | RESISTENCIA CHIP PEL³CULA |
| | R6048 | ERJ3GEYJ103V | CHIP RESISTOR |
| | R6049 | ERJ3GEYJ473V | RESISTENCIA CHIP PEL³CULA |
| | R6050 | ERJ3GEYJ103V | CHIP RESISTOR |
| | R6051 | ERJ3GEYJ1R0V | RESISTENCIA CHIP PEL³CULA |
| | R6053 | ERJ3GEYJ100V | RESISTENCIA CHIP |
| | R6054 | ERJ3GEYJ223V | RESISTENCIA CHIP PEL³CULA |
| | R6055 | ERJ3GEYJ181V | RESISTENCIA |
| | R6056 | ERJ3GEYJ473V | RESISTENCIA CHIP PEL³CULA |
| | W1 | ERJ3GEY0R00V | CHIP JUMPER |
| | W2 | ERJ3GEY0R00V | CHIP JUMPER |
| | W3 | ERJ3GEY0R00V | CHIP JUMPER |
| | W4 | ERJ3GEY0R00V | CHIP JUMPER |
| | W5 | ERJ3GEY0R00V | CHIP JUMPER |
| | W6 | ERJ8GEY0R00V | CHIP JUMPER |
| | W7 | ERJ3GEY0R00V | CHIP JUMPER |
| | W8 | ERJ3GEY0R00V | CHIP JUMPER |
| | W9 | ERJ3GEY0R00V | CHIP JUMPER |
| | W10 | ERJ3GEY0R00V | CHIP JUMPER |
| | W11 | ERJ3GEY0R00V | CHIP JUMPER |
| | W14 | ERJ3GEY0R00V | CHIP JUMPER |
| | W15 | ERJ3GEY0R00V | CHIP JUMPER |
| | W16 | ERJ8GEY0R00V | CHIP JUMPER |
| | W17 | ERJ3GEY0R00V | CHIP JUMPER |
| | W18 | ERJ8GEY0R00V | CHIP JUMPER |
| | W19 | ERJ8GEY0R00V | CHIP JUMPER |
| | W22 | ERJ6GEY0R00V | CHIP JUMPER |
| | W23 | ERJ3GEY0R00V | CHIP JUMPER |
| | W24 | ERJ8GEY0R00V | CHIP JUMPER |
| | W25 | ERJ8GEY0R00V | CHIP JUMPER |
| | W26 | ERJ8GEY0R00V | CHIP JUMPER |
| | W27 | ERJ6GEY0R00V | CHIP JUMPER |
| | W28 | ERJ8GEY0R00V | CHIP JUMPER |
| | W29 | ERJ6GEY0R00V | CHIP JUMPER |
| | W30 | ERJ6GEY0R00V | CHIP JUMPER |
| | W31 | ERJ8GEY0R00V | CHIP JUMPER |
| | W32 | ERJ6GEY0R00V | CHIP JUMPER |
| | W33 | ERJ8GEY0R00V | CHIP JUMPER |
| | W34 | ERJ8GEY0R00V | CHIP JUMPER |
| | W35 | ERJ8GEY0R00V | CHIP JUMPER |
| | W36 | ERJ8GEY0R00V | CHIP JUMPER |
| | W37 | ERJ8GEY0R00V | CHIP JUMPER |
| | W38 | ERJ8GEY0R00V | CHIP JUMPER |
| | W39 | ERJ8GEY0R00V | CHIP JUMPER |
| | W40 | ERJ8GEY0R00V | CHIP JUMPER |
| | W41 | ERJ3GEY0R00V | CHIP JUMPER |
| | W42 | ERJ8GEY0R00V | CHIP JUMPER |
| | W43 | ERJ6GEY0R00V | CHIP JUMPER |
| | W44 | ERJ3GEY0R00V | CHIP JUMPER |
| | W45 | ERJ6GEY0R00V | CHIP JUMPER |
| | W46 | ERJ8GEY0R00V | CHIP JUMPER |
| | PCB | RJB3543A-1 | PRINTED CIRCUIT BOARD ( PANEL ) |
| | Q6003 | B1BAAL000018 | Transistors |
| | D6300 | B3AAA0000487 | LED |

| | | | |
|---|---|---|---|
| | W49 | ERJ8GEY0R00V | CHIP JUMPER |
| | W50 | ERJ8GEY0R00V | CHIP JUMPER |
| | W51 | ERJ6GEY0R00V | CHIP JUMPER |
| | W52 | ERJ6GEY0R00V | CHIP JUMPER |
| | W53 | ERJ8GEY0R00V | CHIP JUMPER |
| | W54 | ERJ8GEY0R00V | CHIP JUMPER |
| | W56 | ERJ8GEY0R00V | CHIP JUMPER |
| | W57 | ERJ8GEY0R00V | CHIP JUMPER |
| | W58 | ERJ8GEY0R00V | CHIP JUMPER |
| | W59 | ERJ6GEY0R00V | CHIP JUMPER |
| | W60 | ERJ6GEY0R00V | CHIP JUMPER |
| | W61 | ERJ8GEY0R00V | CHIP JUMPER |
| | W62 | ERJ8GEY0R00V | CHIP JUMPER |
| | W63 | ERJ8GEY0R00V | CHIP JUMPER |
| | W64 | ERJ8GEY0R00V | CHIP JUMPER |
| | W65 | ERJ8GEY0R00V | CHIP JUMPER |
| | W66 | ERJ6GEY0R00V | CHIP JUMPER |
| | W67 | ERJ6GEY0R00V | CHIP JUMPER |
| | W68 | ERJ8GEY0R00V | CHIP JUMPER |
| | W69 | ERJ6GEY0R00V | CHIP JUMPER |
| | W70 | ERJ8GEY0R00V | CHIP JUMPER |
| | C6200 | F1H1H101A720 | CHIP CAPACITOR |
| | C6201 | F1H1H102A219 | CHIP CAPACITOR |
| | C6400 | F1H1H391A013 | CHIP CAPACITOR |
| | C6402 | F1H1H331A013 | CHIP CAPACITOR |
| | C6404 | F1H1H331A013 | CHIP CAPACITOR |
| | C6406 | F1H1C104A008 | CHIP CAPACITOR |
| | C6408 | F1H1H104A013 | CHIP CAPACITOR |
| | C6409 | F1H1H103A219 | CHIP CAPACITOR |
| | C6412 | F1H1H103A219 | CHIP CAPACITOR |
| | L6400 | J0JBC0000019 | CHIP INDUCTOR |
| | L6401 | J0JBC0000019 | CHIP INDUCTOR |
| | L6405 | J0JBC0000019 | CHIP INDUCTOR |
| | W401 | ERJ3GEY0R00V | CHIP JUMPER |
| | W403 | ERJ3GEY0R00V | CHIP JUMPER |
| | C6503 | F1H1H470A004 | CHIP CAPACITOR |
| | C6506 | F1H1H472A219 | CHIP CAPACITOR |
| | C6515 | F1H1H102A219 | CHIP CAPACITOR |
| | C6516 | F1H1H103A219 | CHIP CAPACITOR |
| | C6517 | F1H1H103A219 | CHIP CAPACITOR |
| | IC6500 | C1AB00003130 | MIC AMP |
| | L6500 | J0JBC0000019 | CHIP INDUCTOR |
| | R6500 | D0GB101JA008 | CHIP RESISTOR |
| | R6501 | D0GB682JA008 | CHIP RESISTOR |
| | R6502 | D0GB104JA008 | CHIP RESISTENCIA |
| | R6503 | D0GB472JA008 | CHIP RESISTOR |
| | R6505 | D0GB331JA008 | CHIP RESISTOR |
| | R6506 | D0GB561JA008 | CHIP RESISTOR |
| | R6507 | D0GB681JA008 | CHIP RESISTENCIA |
| | W201 | ERJ3GEY0R00V | CHIP JUMPER |
| | W202 | ERJ6GEY0R00V | CHIP JUMPER |
| | R6600 | ERJ3GEYJ151V | RESISTENCIA CHIP PEL³CULA |
| | R6601 | ERJ3GEYJ151V | RESISTENCIA CHIP PEL³CULA |
| | R6602 | ERJ3GEYJ151V | RESISTENCIA CHIP PEL³CULA |
| | R6700 | ERJ3GEYJ151V | RESISTENCIA CHIP PEL³CULA |
| | R6701 | ERJ3GEYJ151V | RESISTENCIA CHIP PEL³CULA |
| | R6702 | ERJ3GEYJ151V | RESISTENCIA CHIP PEL³CULA |
| | C6023 | F2A1H470B412 | E-cap |
| | C6028 | F2A1H470B412 | E-cap |
| | C6029 | F2A1C101A155 | CAPACITOR |
| | C6032 | F2A1H220B411 | CAPACITOR |
| | D6005 | B0EAMM000057 | DIODO |
| | D6006 | B0JAME000114 | DIODO |
| | Q6002 | B1BABG000007 | TRANSISTOR |
| | S6000 | EVQ21405RJ | TACK SWITCH |
| | S6001 | EVQ21405RJ | TACK SWITCH |
| | S6002 | EVQ21405RJ | TACK SWITCH |
| | S6003 | EVQ21405RJ | TACK SWITCH |
| | S6004 | EVQ21405RJ | TACK SWITCH |
| | S6005 | EVQ21405RJ | TACK SWITCH |
| | S6006 | EVQ21405RJ | TACK SWITCH |
| | S6007 | EVQ21405RJ | TACK SWITCH |
| | S6008 | EVQ21405RJ | TACK SWITCH |
| | S6009 | EVQ21405RJ | TACK SWITCH |
| | S6010 | EVQ21405RJ | TACK SWITCH |
| | S6011 | EVQ21405RJ | TACK SWITCH |
| | S6012 | EVQ21405RJ | TACK SWITCH |
| | S6013 | EVQ21405RJ | TACK SWITCH |
| | S6014 | EVQ21405RJ | TACK SWITCH |
| | S6015 | EVQ21405RJ | TACK SWITCH |
| | S6016 | EVQ21405RJ | TACK SWITCH |
| | C6202 | F2A1H220A182 | CAPACITOR ELECTROLITICO |
| | C6500 | F2A1H4R7A213 | CAPACITOR ELECTROLITICO |
| | C6502 | F2A1C100A207 | CAPACITOR ELECTROLITICO |
| | C6504 | F2A1HR10A015 | CAPACITOR |
| | C6505 | F2A1C100A207 | CAPACITOR ELECTROLITICO |
| | C6507 | F2A1H4R7A213 | CAPACITOR ELECTROLITICO |
| | C6509 | F2A1H1R0A213 | CAPACITOR ELECTROLITICO |
| | C6510 | F2A1H1R0A213 | CAPACITOR ELECTROLITICO |
| | C6513 | F2A1HR10A015 | CAPACITOR |
| | C6514 | F2A1H2R2A234 | CAPACITOR ELECTROLITICO |

| | | | |
|---|---|---|---|
| | D6800 | B3AAA0001129 | LED |
| | D6600 | B3AEA0000172 | LED |
| | D6601 | B3AEA0000172 | LED |
| | D6602 | B3AEA0000172 | LED |
| | D6700 | B3AEA0000172 | LED |
| | D6701 | B3AEA0000172 | LED |
| | D6702 | B3AEA0000172 | LED |
| | D6007 | B0EAMM000057 | DIODO |
| | W71 | ERJ6GEY0R00V | CHIP JUMPER |
| | W72 | ERJ6GEY0R00V | CHIP JUMPER |
| | W73 | ERJ6GEY0R00V | CHIP JUMPER |
| | W55 | ERJ6GEY0R00V | CHIP JUMPER |
| | L6502 | D0GBR00JA008 | CHIP JUMPER |
| | LB6500 | D0GBR00JA008 | CHIP JUMPER |
| | R6009 | ERJ3GEYJ821V | RESISTENCIA CHIP PELICULA |
| | R6057 | ERJ3GEYJ221V | RESISTENCIA CHIP PEL3CULA |
| | R6007 | ERJ3GEYJ331V | RESISTENCIA CHIP PEL3CULA |
| | R6021 | ERJ3GEYJ271V | RESISTENCIA CHIP PEL3CULA |
| | R6022 | ERJ3GEYJ271V | RESISTENCIA CHIP PEL3CULA |
| | R6023 | ERJ3GEYJ271V | RESISTENCIA CHIP PEL3CULA |
| | R6025 | ERJ3GEYJ331V | RESISTENCIA CHIP PEL3CULA |
| | R6026 | ERJ3GEYJ681V | RESISTENCIA |
| | R6027 | ERJ3GEYJ271V | RESISTENCIA CHIP PEL3CULA |
| | R6032 | ERJ3GEYJ331V | RESISTENCIA CHIP PEL3CULA |
| | R6034 | ERJ3GEYJ331V | RESISTENCIA CHIP PEL3CULA |
| | R6037 | ERJ3GEYJ331V | RESISTENCIA CHIP PEL3CULA |
| | C6024 | F1H1H562A219 | CHIP CAPACITOR |
| | C6511 | F1H1H102A219 | CHIP CAPACITOR |
| | R6504 | ERJ3GEYJ333V | RESITENCIA CHIP |
| | ZB6001 | RMNX0151 | LED Holder |
| | ZB6002 | RMNX0151 | LED Holder |
| | ZB6003 | RMNX0151 | LED Holder |
| | ZB6004 | RMNX0151 | LED Holder |
| | ZJ6300 | REX1472 | 5P FLAT WIRE USB TO MAIN PCB |
| | D6001 | B3AEA0000127 | LED azul |
| | D6002 | B3AEA0000127 | LED azul |
| | D6003 | B3AEA0000127 | LED azul |
| | D6004 | B3AEA0000127 | LED azul |